A	SEE ECN 12910	11-30-1988		
B	SEE ECN 10065	11-6-90	JE	
C	SEE ECN 13144	CP 4-21-87		
D	SEE ECN 13515 (1-2)	CP 8-31-88		
E	SEE ECN 13967	RMB 12-28-89		

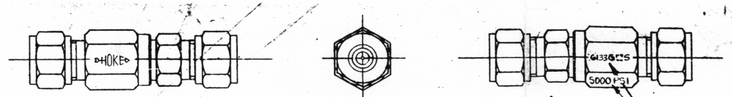

FULL SIZE VIEW OF 6133G6S

(E) ROLL STAMP ASSEMBLY NO. & 5000 PSI
5/64 HIGH CHARACTERS - CENTRAL

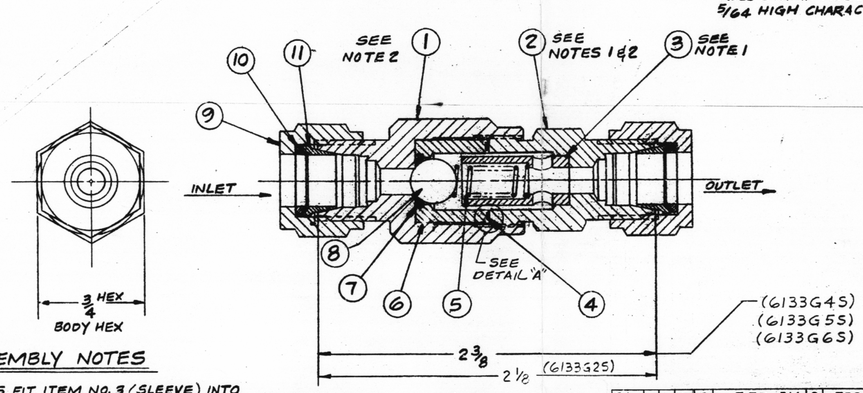

IVEN-70-98

ASSEMBLY NOTES

1. PRESS FIT ITEM NO. 3 (SLEEVE) INTO ITEM NO. 2 (PLUG) TO BOTTOM
2. ASSEMBLE ITEM NO. 1 (BODY) TO ITEM NO. 2 (PLUG) USING 20 FT. LBS TORQUE

SHOWN- ASSY NO. 6133G6S
SCALE-2=1

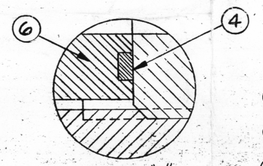

DETAIL "A"
SCALE-10=1

TECH DATA	
MAX OPERATING PRESS (PSIG)	5000
PROOF PRESS (PSIG)	10000
MIN BURST PRESS (PSIG)	20000
MAX OPERATING TEMP (°F)	-20° TO +350°
LEAKAGE	0/1 MIN
FLUID	WOG
(D) Cv FACTOR	.45
CRACKING PRESS (PSI)	2
FLOW @ 10 PSI TO ATMOS. (SCFM)	7
FLOW @ 160 PSI TO ATMOS. (SCFM)	50
BASIC MATERIAL	SST 303
WEIGHT (OZ)	

SPECIFICATION	
CLEANING	HPS-1
ASSEMBLY & TEST	HPT-31

CP & L Dwg. No. HBR2-11073					
CP & L P.O. No. CP-220					
DWG. REV.	FIELD VERIFIED BY	DRAWN BY	CHK'D BY	APP'D BY	DATE
0	JWP	HOKE	CLO	CLO	3/19/91

QTY / ASSY				ITEM	IND EDIT	PART NO.	IND EDIT	TITLE	MATERIAL	MATERIAL SPEC	FINISH	FINISH SPEC
			11	B		5FF-316	2	FERRULE, FRONT	SST 316			
	2		11	B		6FF-316	2	FERRULE, FRONT	SST 316			
		2	11	B		4FF-316	2	FERRULE, FRONT	SST 316			
		2	11	B		2FF-316	2	FERRULE, FRONT	SST 316			
2			10			5FR-316	2	FERRULE, REAR	SST 316			
	2		10	B		6FR-316	2	FERRULE, REAR	SST 316			
		2	10	B		4FR-316	2	FERRULE, REAR	SST 316			
		2	10	B		2FR-316	2	FERRULE, REAR	SST 316			
2			9	B		5N-316	2	NUT	SST 316			
	2		9	B		6N-316	2	NUT	SST 316			
		2	9	B		4N-316	2	NUT	SST 316			
		2	9	B		2N-316	2	NUT	SST 316			
1	1	1	8	–		5106A	2	BALL - 5/16 DIA	SST 302			
(D2) 1	1	1	7	A		58-010-50	2	O-RING	FLUORO-ELASTOMER			
1	1	1	6	A		90548-2	2	SEAT RETAINER	SST 303			
(C) 1	1	1	5	A		90792-3	2	SPRING	SST 316			
1	1	1	4	A		90547-5	2	GASKET	TEFLON			
(B) 1	1	1	3	A		90021-3	2	SLEEVE	SST 316			
1			2	B		95188-100	2	PLUG	SST 303			
	1		2	B		91509-2	2	PLUG	SST 303			
		1	2	B		90820-2	2	PLUG	SST 303			
		1	2	B		91511-2	2	PLUG	SST 303			
1			1	B		95187-100	2	BODY	SST 303			
	1		1	B		91508-2	2	BODY	SST 303			
		1	1	B		90850-2	2	BODY	SST 303			
		1	1	B		91510-2	2	BODY	SST 303			

LIST OF MATERIAL

(A) 6133G5S, 6133G4S, 6133G6S, 6133G2S — ASSEMBLY NO.

UNLESS OTHERWISE SPECIFIED:
1. DIMENSIONS ARE IN INCHES
2. TOLERANCES:
DECIMALS .0000 ± .0005
.000 ± .005
.00 ± .01
ANGLES ± 2°
3. MACHINED SURFACE FIN. 63
4. GEOMETRIC TOLERANCES AND POSITIONING WITHIN .010 TIR
5. SYMBOLS AS PER MIL-STD
6. DIMENSIONS IN [ ] ARE MM

DR	E.J.	12-28-66
CHKD	WPM	1-10-67
APPD	E	1-17-67
APPD		

VALVE, CHECK, BALL-
GYROLOK CONN
2 PSI CRACKING PRESS
SST 303

SCALE 2=1

HOKE INCORPORATED
CRESSKILL, NEW JERSEY

6133G6S

D-3

The image contained on this frame was made in the normal and regular course of business by CP&L on the date stated. It is an accurate reproduction of the document submitted for microfilming.
Date: 3-21-91