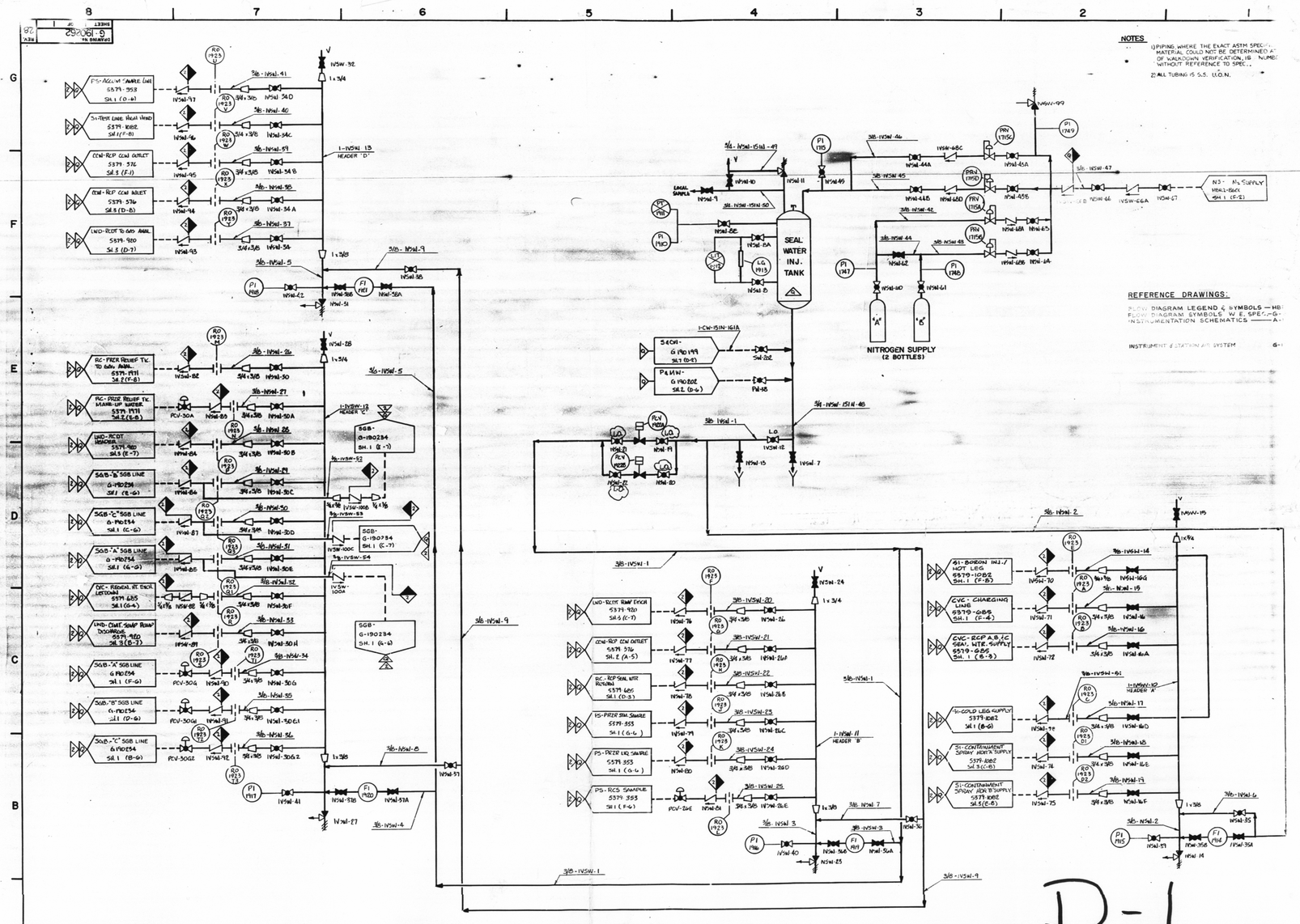

REVISION		
9	DCR. 83-2230 MOD.	REVISED & REDRAWN TO SUPERSEDE DWG. G-190262 SH. 1 REV. 8 BY: K. JOHNSON APPR: JFG JR. McCaskill 11/11/83
10	DCR. 86-475 MOD.	BY: G. MILLER CHK: K. JOHNSON APPR: JFG JR. McCaskill 12/22/86
11	DCR. 89-1033 MOD.	BY: W. BLANCHARD CHK: K. JOHNSON APPR: [illegible]
12	DCR. 87-659	BY: HAROLD E. LLOYD CHK: K. JOHNSON APPR: [illegible]
13	DCR. 86-418 MOD.	BY: H. E. LLOYD CHK: K. JOHNSON APPR: JFG JR. McCaskill 9/22/87
14	DCR. 88-1035	BY: J. WALTERS CHK: K. JOHNSON APPR: [illegible]
15	DCR. 88-1036	BY: J. WALTERS CHK: K. JOHNSON APPR: [illegible]
16	DCR. 89-272 MOD.	BY: J. WALTERS CHK: K. JOHNSON APPR: [illegible]
17	DCR. 89-1117 MOD.	BY: J. WALTERS CHK: K. JOHNSON APPR: [illegible]
18	DCR. 89-1118	BY: J. WALTERS CHK: H. E. LLOYD APPR: [illegible]
19	DCR. 89-1120 MOD.	BY: J. WALTERS CHK: [illegible] APPR: [illegible]
20	DCR. 89-1121 MOD.	BY: S. SORENSEN CHK: K. JOHNSON APPR: [illegible]
21	DCR. 90-378 MOD.	BY: J. WALTERS CHK: J. WALTERS APPR: [illegible]
22	DCR. 90-1040 MOD.	BY: J. WALTERS CHK: J. WALTERS APPR: [illegible]
23	DCR. 90-1041 MOD.	BY: J. WALTERS CHK: [illegible] APPR: [illegible]
24	DCR. 90-1042	BY: G. SIGERS CHK: [illegible] APPR: [illegible]
25	DCR. 90-1043	BY: J. WALTERS CHK: R. HYDRICK APPR: [illegible]
26	DCR. 90-1337	BY: E. CLEMENT CHK: S. WATTERSON APPR: [illegible]
27	DCR. 91-1381	BY: E. CLEMENT CHK: S. WATTERSON APPR: [illegible]
28	DCR. 91-1382	BY: S. BOWDEN CHK: J. WALTERS APPR: [illegible]

30 X

The image contained on this frame was made in the normal and regular course of business by CP&L on the date stated below. It is an accurate reproduction of the document submitted for microfilming.

Date: 7-2-90

Operator: Kenneth Wilson

DRN: T. SELPH
CHK: W. JOHNSON
DSGN: RC-EWILP
CERT APPR:
CHK:
APP JFG McCaskill
DATE 12-21-82

CAROLINA POWER & LIGHT
H. B. ROBINSON S.E. PLAN
UNIT - No 2 HARTSVILLE, S

TITLE:
ISOLATION VALVE S
WATER FLOW DIAGR

VENDOR No. | SIZE E | DRAWING No. G-190262
SCALE NONE | SHEET 1