CRYSTAL RIVER EXAM
50-302/2002-301

JANUARY 28 - FEBRUARY 6, 2002

DRAFT SUBMITTAL

JPMS AND SCENARIOS

FPC

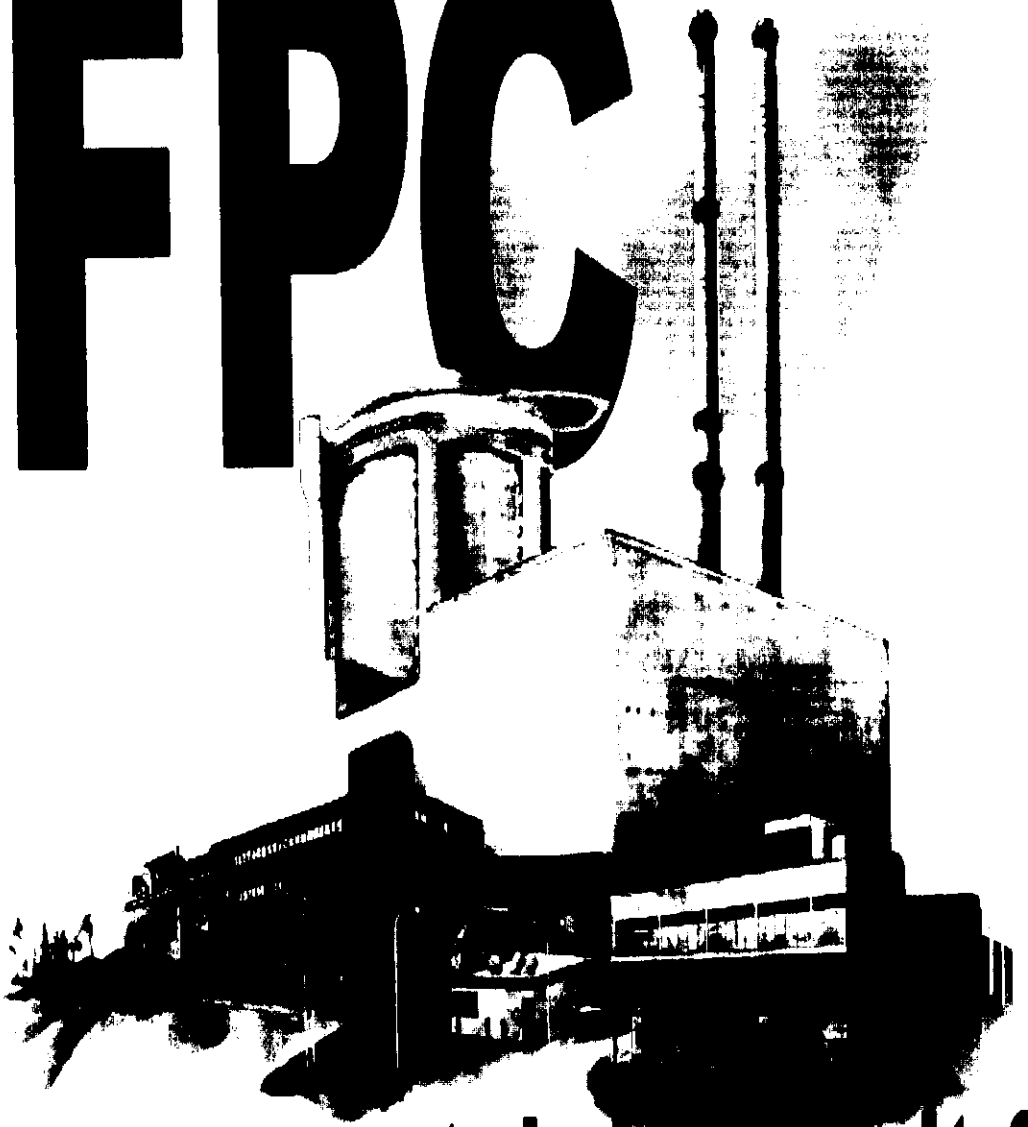

crystal river unit 3

December 4, 2001
TRX #01-0091

Mr. Larry Mellen
USNRC / Region II
Sam Nunn Atlanta Federal Center
61 Forsyth Street SW, Suite 23T85
Atlanta, GA 30303-8931

SUBJECT: 2002 Initial License Examination Simulator Scenarios, and JPMs

Mr. Mellen:

Enclosed are the Simulator Scenarios and the Job Performance Measures (JPMs) for the exam scheduled January 2002:
Simulator Exam (Operational)
Job Performance Measures [JPMs] (Walk Through)

These examination scenarios and JPMs should be withheld from public disclosure until after the examination is complete.

Any questions concerning these questions may be addressed to Jim Owen, (352) 795-0504 ext. 6190, or Keith Hampton ext. 6282.

Sincerely,

David DeMontfort
Superintendent,
Operations Training

Facility: CR-3 Scenario No.: 1 Op-Test No.: _____

Examiners: _____ Operators: _____

Initial Conditions: 23% power with the Turbine at 1800 rpm, (set turbine 1st stage temperature to 365°F)

Turnover: Bring the Turbine on-line in accordance with OP-203

Event No.	Malfunction No.	Event Type*	Event Description
1		N	Turbine startup IAW OP-203 (BOP/SRO)
2	8	I	Fail RMA-6 high [Fail sample pump](SRO ITS call)
3	7	I / R	Fail Neutron Error, Man Rx control (OAC React man)
4	5/6	I	Fail Pzr level LT-1 (OAC)
5	4	C	Pzr small Steam space leak (19.5 gpm) (OAC)
6	3	C	RCV-13 fails to close (OAC) RCP/Rx trip
7	2	M	Large steam space leak (160 gpm)
8	1	C	MUP-1B shaft failure on ES (BOP)
9	1	C	DCP-1B fails to start on ES (BOP)
10	1	C	RCP-1D breaker will not trip (OAC)
11	8a	C	Trip CDP-1B (BOP) before MT
12	8b	C	Trip AHF-17A (BOP) before MT

* (N)ormal, (R)eactivity, (I)nstrument, (C)omponent, (M)ajor

Facility: CR-3 Scenario No.: 2 Op-Test No.: _____

Examiners: _____ Operators: _____

Initial Conditions: 100% power,
The following is OOS:
SWP-1C, RED TAG: "B" EDG, MUP-1A, and FWP-7 Racked out also.

SETUP: Rack out 3210 "B" EDG brk, tag for BKR Close Fuse, Start SWP-1A.

Turnover: On coming shift align RB ventilation to SW cooling

Event No.	Malfunction No.	Event Type*	Event Description
1		N	Align RB ventilation to SW cooling (BOP/SRO)
2	1*	C	LOOP to "A" ES bus (SRO ITS/BOP AP-770)
3	2	I	RCS press fail high (OAC)
4	3	C	"B" OTSG 40 gpm tube leak (OAC)
5	4	I / R	ULD failure (OAC react man) down power
6	5	M	"B" OTSG 350 gpm tube rupture
7	6	C	MSLI / MFLI fail to actuate (OAC)
8	7	C	Turbine fails to trip (OAC)
9	8	C	"B" side MSSV fails open (BOP)
10	1a*	C	Trip ARP-1B (BOP) prior to MT or LOOP

* (N)ormal, (R)eactivity, (I)nstrument, (C)omponent, (M)ajor

Facility: CR-3 Scenario No.: 3 Op-Test No.: _____

Examiners: _____ Operators: _____

Initial Conditions: 100% power, The following is OOS: SWP-1C, RED TAG: "B" EDG, MUP-1A, and FWP-7 Racked out also.
SETUP: Start SWP-1A, RCV -8 weeping RCDT level just below High alarm.

Turnover: Continue operating

Event No.	Malfunction No.	Event Type*	Event Description
1		N	High Alarm on RCDT pump IAW OP-407J
2	1	C	DPDP-5A fails (SRO ITS / BOP)
3	2	C	SWV-82 fails closed (BOP)
4	3	I	ICS fails to re-ratio (OAC)
5	4	C / R	"B" MFWP lube oil leak (OAC react man)
6	5	C	"A" MFWP trips (OAC)
7	6	M	ATWAS failure on Rx trip (OAC trip rods at Bkr)
8	7	C	EFP-2 failure (BOP)
9	8	C	Loss of all FW

* (N)ormal, (R)eactivity, (I)nstrument, (C)omponent, (M)ajor

Facility: CR-3 Scenario No.: SPARE (4) Op-Test No.: _____

Examiners: _____ Operators: _____

Initial Conditions: 100% power with full ICS auto control

Turnover: A line crew is in the CR-3 switchyard performing routine maintenance on output breaker 1661's compressor. They will notify the control room when maintenance is complete.

The following equipment is OOS:
DHP-1A Pump packing/seal adjustment
EFP-3 Pump packing/seal adjustment
WTB-6B Motor pump alignment
ARP-1B Routine motor maintenance
RM-G27 For repair
Intake screen wash system due to mechanical damage from an intake crane accident

EDG-1A is running for SP-354A and is ready to shutdown.
OTSG "B" has a 3 GPD primary to secondary leak.

Event No.	Malfunction No.	Event Type*	Event Description
1		N	Shutdown EDG-1A IAW SP-354A (BOP/SRO ITS)
2	3	I	Fail Thot high (selected) (OAC)
3	4/5	C/R	"B" MFW pump trips no runback (OAC/SRO REACT)
4	6	I	Neutron error fails high (OAC)
5	8	M	Unisolable steam leak in RB
6	8	I	ATWAS only 1 RPS channel trips (OAC)
7	9	I	MFWI fails, manual isolation (BOP)

* (N)ormal, (R)eactivity, (I)nstrument, (C)omponent, (M)ajor

OPERATING TEST NO.: R/I/U

Applicant Type	Evolution Type	Minimum Number	Scenario Number 1	2	3	4
RO	Reactivity	1	BOP	5	BOP	3
	Normal	1	1	OAC	1	OAC
	Instrument / Component	4	8/9/11/12	3/7/8	2/3/8	2/4/6
	Major	1	7	6	7	5
As RO	Reactivity	1	3		5	
	Normal	0	OAC		OAC	
	Instrument / Component	2	4/5/6		4/6/9	
	Major	1	7		7	
SRO-I						
As SRO	Reactivity	0		5		3
	Normal	1		1		1
	Instrument / Component	2		3/7/8/9/10		2/4/6/7
	Major	1		6		5
SRO-U	Reactivity	0	3	BOP	5	BOP
	Normal	1	1	1	1	1
	Instrument / Component	2	4/5/6 8/9/11/12	2/9/10	2/3/6/9	7
	Major	1	7	6	7	5

Instructions:

(1) Enter the operating test number and Form ES-D-1 event numbers for each

(2) Reactivity manipulations may be conducted under normal or controlled abnormal conditions (refer to Section D.4.d) but must be significant per Section

(3) Whenever practical, both instrument and component malfunctions should be included; only those that require verifiable actions that provide insight to the applicant's competence count toward the minimum requirement.

AUTHOR: Keith E. Hampton

NRC Reviewer: _____

OPERATING TEST NO.: R/I/I

Applicant Type	Evolution Type	Minimum Number	Scenario Number 1	2	3	4
RO	Reactivity	1	BOP	5	BOP	3
	Normal	1	1	OAC	1	OAC
	Instrument / Component	4	8/9/11/12	3/7/8	2/3/8	2/4/6
	Major	1	7	6	7	5
As RO	Reactivity	1	3			BOP
	Normal	0	OAC			1
	Instrument / Component	2	4/5/6			7
	Major	1	7			5
SRO-I						
As SRO	Reactivity	0		5	5	
	Normal	1		1	1	
	Instrument / Component	2		3/7/8/9/10	2/3/6/9	
	Major	1		6	7	
SRO-I	Reactivity	0	3	BOP	5	3
	Normal	1	1	1	OAC	1
	Instrument / Component	2	4/5/6 8/9/11/12	2/9/10	4/6/9	2/4/6/7
	Major	1	7	6	7	5

Instructions:

(1) Enter the operating test number and Form ES-D-1 event numbers for each

(2) Reactivity manipulations may be conducted under normal or controlled abnormal conditions (refer to Section D.4.d) but must be significant per Section

(3) Whenever practical, both instrument and component malfunctions should be included; only those that require verifiable actions that provide insight to the applicant's competence count toward the minimum requirement.

AUTHOR: Keith E. Hampton

NRC Reviewer: _____

OPERATING TEST NO.: R/I/Surrogate

Applicant Type	Evolution Type	Minimum Number	Scenario Number 1	2	3	4
RO	Reactivity	1	BOP	5	BOP	3
	Normal	1	1	OAC	1	OAC
	Instrument / Component	4	8/9/11/12	3/7/8	2/3/8	2/4/6
	Major	1	7	6	7	5
As RO	Reactivity	1	3		5	
	Normal	0	OAC		OAC	
	Instrument / Component	2	4/5/6		4/6/9	
	Major	1	7		7	
SRO-I						
As SRO	Reactivity	0		5		3
	Normal	1		1		1
	Instrument / Component	2		3/7/8/9/10		2/4/6/7
	Major	1		6		5
SRO-RO Surrogate	Reactivity	0	3	BOP	5	BOP
	Normal	1	1	1	1	1
	Instrument / Component	2	4/5/6 8/9/11/12	2/9/10	2/3/6/9	7
	Major	1	7	6	7	5

Instructions:

(1) Enter the operating test number and Form ES-D-1 event numbers for each

(2) Reactivity manipulations may be conducted under normal or controlled abnormal conditions (refer to Section D.4.d) but must be significant per Section

(3) Whenever practical, both instrument and component malfunctions should be included; only those that require verifiable actions that provide insight to the applicant's competence count toward the minimum requirement.

AUTHOR: Keith E. Hampton

NRC Reviewer: _____

Competencies R / I / U & (surrogate)	Applicant #1 RO/SRO-I/SRO-U				Applicant #2 RO/SRO-I/SRO-U				Applicant #3 RO/SRO-I/SRO-U			
	SCENARIO				SCENARIO				SCENARIO			
	1	2	3	4	1 o	2 s	3 o	4 s	1 s	2 B	3 s	4 B
Understand and Interpret Annunciators and Alarms	1/11/12	3/4/7/8	1/2/3/8	1/5/7	4/5/6	2/3/4/6 10	3/5/6 7/9	1/3/5 6/7	1/2/4/6 11/12	1/2/4/9 10	ALL	1/3/5/7
Diagnose Events and Conditions	9/11/12	3/4/5 6/7/8	2/3/8/9	5/7	4/5/6/10	2/3/4 5/6/7 8/9/10	3/4/5 6/7/9	2/3/4 5/6/7	2/3/4 5/6/7 8/9/10 11/12	2/4/9 10	ALL	3/5/7
Understand Plant and System Response	1/7/11/12	3/4/5 6/7/8	2/3/5 6/8	5/7	3/5/7/10	2/3/4 5/6/7 8/9/10	3/4/5 6/7/9	2/3/4 5/6/7	ALL	1/2/4/9 10	ALL	1/3/5/7
Comply With and Use Procedures (1)	1/11/12	4/6/8	1/3/8/9	1/7	5/6/7/10	2/4/5 6/7/8 10	5/6/7/9	1/2/3 5/6/7	1/4/5 6/7/8 9/10 11/12	1/2/4/9 10	ALL	1/3/5/7
Operate Control Boards (2)	1/8/9 11/12	3/5/7/8	1/3/8/9	1/7	3/4/6 7/10	N/A	4/5/6 7/9	N/A	N/A	1/2/4/9 10	N/A	1/3/5/7
Communicate and Interact With the Crew	1/7/8/9 11/12	3/4/5 6/7/8	1/2/3 8/9	1/5/7	3/4/5 6/7/10	2/3/4 5/6/7 8/9/10	3/4/5 6/7/9	1/2/3 4/5/6/7	ALL	1/2/4/9 10	ALL	1/3/5/7
Demonstrate Supervisory Ability (3)	N/A	N/A	N/A	N/A	N/A	2/3/4/6 7/8/9/10	N/A	ALL	ALL	N/A	ALL	N/A
Comply With and Use Tech. Specs. (3)	N/A	N/A	N/A	N/A	N/A	2/4	N/A	1/6	2/5	N/A	2/7	N/A

NOTES:

(1) Includes Technical Specification compliance for an RO.
(2) Optional for an SRO-U.
(3) Only applicable to SROs.

Instructions:

Circle the applicant's license type and enter one or more event numbers that will allow the examiners to evaluate every applicable competency for every applicant.

AUTHOR: Keith E. Hampton

NRC Reviewer: _____

Competencies R / I / I	Applicant #1 RO/SRO-I/SRO-U				Applicant #2 RO/SRO-I/SRO-U				Applicant #3 RO/SRO-I/SRO-U			
	SCENARIO				SCENARIO				SCENARIO			
	1 B	2 O	3 B	4 O	1 O	2 S	3 S	4 B	1 S	2 B	3 O	4 S
Understand and Interpret Annunciators and Alarms	1/11/12	3/4/7/8	1/2/3/8	1/5/7	4/5/6	2/3/4/6 10	ALL	1/3/5/7	1/2/4/6 11/12	1/2/4/9 10	3/5/6 7/9	1/3/5 6/7
Diagnose Events and Conditions	9/11/12	3/4/5 6/7/8	2/3/8/9	5/7	4/5/6/10	2/3/4 5/6/7 8/9/10	ALL	3/5/7	2/3/4 5/6/7 8/9/10 11/12	2/4/9 10	3/4/5 6/7/9	2/3/4 5/6/7
Understand Plant and System Response	1/7/11/12	3/4/5 6/7/8	2/3/5 6/8	5/7	3/5/7/10	2/3/4 5/6/7 8/9/10	ALL	1/3/5/7	ALL	1/2/4/9 10	3/4/5 6/7/9	2/3/4 5/6/7
Comply With and Use Procedures (1)	1/11/12	4/6/8	1/3/8/9	1/7	5/6/7/10	2/4/5 6/7/8 10	ALL	1/3/5/7	1/4/5 6/7/8 9/10 11/12	1/2/4/9 10	5/6/7/9	1/2/3 5/6/7
Operate Control Boards (2)	1/8/9 11/12	3/5/7/8	1/3/8/9	1/7	3/4/6 7/10	N/A	N/A	1/3/5/7	N/A	1/2/4/9 10	4/5/6 7/9	N/A
Communicate and Interact With the Crew	1/7/8/9 11/12	3/4/5 6/7/8	1/2/3 8/9	1/5/7	3/4/5 6/7/10	2/3/4 5/6/7 8/9/10	ALL	1/3/5/7	ALL	1/2/4/9 10	3/4/5 6/7/9	1/2/3 4/5/6/7
Demonstrate Supervisory Ability (3)	N/A	N/A	N/A	N/A	N/A	2/3/4/6 7/8/9/10	ALL	N/A	ALL	N/A	N/A	1/2/3 4/5/6/7
Comply With and Use Tech. Specs. (3)	N/A	N/A	N/A	N/A	N/A	2/4	2/7	N/A	2/5	N/A	N/A	1/6

NOTES:

(1) Includes Technical Specification compliance for an RO.
(2) Optional for an SRO-U.
(3) Only applicable to SROs.

Instructions:

Circle the applicant's license type and enter one or more event numbers that will allow the examiners to evaluate every applicable competency for every applicant.

AUTHOR: Keith E. Hampton

NRC Reviewer: _____

Facility: Crystal River Unit 3 Exam Level: RO/SRO		Date of Examination: 01-28-2002 Operating Test No.: 1
Administrative Topic/Subject Description		Describe method of evaluation: 1. ONE Administrative JPM, OR 2. TWO Administrative Questions
A.1	Plant Parameter Verification	JPM – Perform an Estimated Critical Boron Calculation (ECB) /001A4.10/ 3.5/3.9 (OP-210 Enclosures 4/5) [D, bank]
	Plant Parameter Verification	JPM – Perform a Time to Boil Calculation / 025AA1.02/ 3.8/3.9 (OP-103H) [N, new]
A.2	Surveillance Testing	JPM – Perform RCP Seal Data Sheet / 003A4.04/ 3.1/3.0 (SP-300 Enclosure 2 page 5) [D, bank]
A.3	Radiation Hazards	JPM – Determine worker stay times and dose requirements with survey maps/ 2.3.4/ 2.5/3.1 (RSP-101, and HPP-300) [N, new]
A.4	SRO Emergency action levels and classifications	JPM – Determine Emergency Action Level and Complete the State of Florida Notification Message Form for Nuclear Power Plants/2.4.41/4.1 (EM-202) [N, new]
A.4	RO Emergency Dose Assessment	JPM – Complete an OFF-Site Dose Assessment during Radiological Emergencies (Control Room Method) 2.3.10/ 2.9 (EM-204A) [D, bank]

Facility: Crystal River Unit 3 Exam Level: RO/SRO(I)	Date of Examination: 01-28-2002 Operating Test No.: 1

B.1 Control Room Systems

System/JPM Title/KA	Type Code*	Safety Function
a. CRD - Transfer Control Rod Group 1 to the Auxiliary Power Supply / 001K4.03/ 3.5/3.8/ (OP-502)	D, S	1
b. MUP – Perform an Emergency Boration / 024AA2.01/ 3.8/4.1 / (AP-490)	N, A, S	2
c. ECCS – Transfer ECCS suction to the RB sump / 009EK3.21/ 4.2/4.5 (EOP-14 Enclosure 19)	D, S	3
d. AFW – Emergency Feedwater Management / E14.EA1.3/ 3.6/3.8 / (EOP-14 Enclosure 7)	D, A, S	4
e. BS – Ensure BS actuation / 026A3.01/ 4.3/4.5 / (EM-225C)	D, A, S	5
f. RPS – Energize RPS Channel/ 012A2.02/ 3.6/3.9 / (OP-507)	D, S	7
g. RM – Adjust RM-L2 setpoints for release/ 059AA1.01/ 3.5/3.5 / (OP-505)	N, S	9

B.2 Facility Walk-Through

a. VITAL ELEC – Energize VBIT-1A and supply the vital bus / 062A4.07/ 3.1/3.1 / (OP-703)	N	6
b. FS/OTSG – Transfer contaminated secondary inventory to FST/ 037AK3.07/ 4.2/4.4 / (EOP-14 Enclosure 9)	D	8
c. WG – Perform a Waste Gas release / G2.3.11/ 2.7/3.2 / (OP-412B)	D, A, R	9

*Type Codes: (D)irect, (M)odified from bank, (N)ew, (A)lternate path, (C)ontrol room, (S)imulator, (L)ow-Power, (R)CA, **PRA High System Importance

Facility: Crystal River Unit 3 Exam Level: SRO(U)	Date of Examination: 01-28-2002 Operating Test No.: 1

B.1 Control Room Systems

System/JPM Title/KA	Type Code*	Safety Function
a. MUP – Perform an Emergency Boration / 024AA2.01/ 3.8/4.1 / (AP-490)	N, A, S	2
b. ECCS – Transfer ECCS suction to the RB sump / 009EK3.21/ 4.2/4.5 (EOP-14 Enclosure 19)	D, S	3
c. CRD - Transfer Control Rod Group 1 to the Auxiliary Power Supply / 001K4.03/ 3.5/3.8/ (OP-502)	D, S	1

B.2 Facility Walk-Through

a. FS/OTSG – Transfer contaminated secondary inventory to FST/ 037AK3.07/ 4.2/4.4 / (EOP-14 Enclosure 9)	D	8
b. WG – Perform a Waste Gas release / G2.3.11/ 2.7/3.2 / (OP-412B)	D, A, R	9

*Type Codes: (D)irect, (M)odified from bank, (N)ew, (A)lternate path, (C)ontrol room, (S)imulator, (L)ow-Power, (R)CA, **PRA High System Importance

Op-Test No.: 1 Scenario No.: 1 Event No.: 1 Rev.: 0

Event Description: OP-203 will be signed off to step 4.2.22, which is to complete the turbine startup; auto synchronize, and load the generator. (**NORM EVOL**). This will continue until condensate is in automatic and the procedure sends them to OP-204 Power Operation.

Time	Position	Applicant's Actions or Behavior
	BOP	Complete the steps in OP-203 section 4.2, step 4.2.22 to parallel and load the generator. Clear the Turbine steam flow low alarm (O-4-2) Close the remaining output breaker manually Step 4.2.26 is a GO TO step 4.2.35 Transfer EHC to "ICS AUTO" Load the turbine via the turbine bypass valves (TBVs) Transfer the TBVs to AUTO
	SRO	Monitor the BOP/OAC performing the turbine startup, and power escalation
	OAC	Increase power using the SG/RX master hand/auto station Raise OTSGs off Low Level Limits (K-7-4; K-8-4) (LLL) via increasing SG/RX master demand. Once LLL is clear place SG/RX master in "AUTO" Select Delta Tc to "AUTO".

Op-Test No.: 1 Scenario No.: 1 Event No.: 2 Rev.: 0

Event Description: While the OAC is getting ICS into automatic, the RMA-6 sample pump fails, indicating a high flow condition. This is an SRO call for ITS 3.4.14 Condition B for RCS leak rate

Time	Position	Applicant's Actions or Behavior
	SRO	ITS 3.4.14 RCS leak rate Condition B for the radiation monitoring portion of the RCS leak rate
	BOP	Acknowledge alarm Atmospheric Monitor Warning (H-2-2) and inform SRO of high flow indication.

Op-Test No.: 1 Scenario No.: 1 Event No.: 3 Rev.: 0

Event Description: Once ICS stations are in automatic the ITS call made and CDP-1B event is stable then Neutron error fails (**MALF**) and requires manual control of reactor Diamond and Bailey stations. This will lead to the reactivity manipulation in manual control.

Time	Position	Applicant's Actions or Behavior
	OAC	Observe the erratic swings of the neutron error indication, positive and then negative, getting larger until it is about 2 units in each direction causing rod motion. The excessive rod motion would exceed the continuous run time limit and precaution in OP-502 for control rod drive. Take manual control of the reactor diamond panel and the reactor bailey station to stop rod motion and lock neutron error at zero. This will result in the Unit Master in TRACK alarm (K-6-2). May take feedwater loop masters to hand if they do not want Tave controlled by the feedwater subsystem. This is arbitrary to the crew and how comfortable they are with feedwater controlling Tave.
	SRO	Monitor and supervise the control rod drive system. Call for maintenance to investigate problem. Have the OAC continue the power escalation in manual (**MAY HAVE TO PROMPT FOR MEGAWATTS**)

Op-Test No.: 1 Scenario No.: 1 Event No.: 4 Rev.: 0

Event Description: Once power is about 30 % then insert failure of the Pressurizer Level LT-1 (**MALF**). This malfunction may cause another course of action in AP-520 that would deviate at step 3.4 actions, if the crew assumes this is a significant rise in RCS leakage.

Time	Position	Applicant's Actions or Behavior
	OAC	Diagnose level transmitter failure SASS mismatch level high Pressurizer level high alarm (I-7-1) SPDS levels increasing above normal operating band Chart recorder LIR-1 increasing above normal operating band.
	SRO	Monitor and supervise pressurizer level transmitter failure. Refer to OP-501 for proper level transmitter selection.
	OAC	Select LT3-Y on RC-1MS to return the SPDS indications to normal and clear the High-level alarm.

Op-Test No.: 1 Scenario No.: 1 Event No.: 5 Rev.: 0

Event Description: Once above 30% power and in automatic on the ICS stations then insert pressurizer small steam leak (**MALF**) (19.5 gpm). This is a small continuous pressure decrease that will send the operator into AP-520 and slow enough to take actions prior to protective functions actuation. This should actuate before the LT-1 failure.

Time	Position	Applicant's Actions or Behavior
	OAC	Diagnose RCS leak Slow pressure decrease No atmospheric monitor (RMA-6 is OOS) All heater energized with pressure decreasing and level very slowly decreasing RB fan condensate high alarms (B-2-5 and E-2-5) will alarm but much later into the malfunction.
	SRO	Directs OAC to quantify the leakage and enters AP-520 Loss of RCS coolant or pressure.
	OAC	Commence Leak isolation

Op-Test No.: 1 Scenario No.: 1 Event No.: 6 Rev.: 0

Event Description: RCV-13 (Spray valve block valve fails to close) (**MALF**) during AP-520, this requires tripping of the "B" RCP and then the Reactor.

Time	Position	Applicant's Actions or Behavior
	OAC	During leak isolation RCV-13 fails to close, the amber light remains "LIT" and the valve does not indicate open or closed. RCS pressure continues to decrease.
	SRO	Directs the OAC to trip the "B" RCP if RCV-13 is not closed.
	OAC	Secures "B" RCP and monitors RCS flow and main feedwater flow indications based on Delta Tc. RCS low flow alarm (J-3-3) Pressure continues to decrease.
	SRO	Directs the OAC to trip the reactor and concurrently perform EOP-2
	OAC	Depresses the manual trip pushbutton Perform Immediate Actions for EOP-2 Vital System Status Verification If feedwater loop masters left in manual may fill OTSGs to high level limits

Op-Test No.: 1 Scenario No.: 1 Event No.: 7 Rev.: 0

Event Description: Large steam space leak from the pressurizer (MAJOR TRANSIENT) (160 gpm). This is triggered from the reactor trip

Time	Position	Applicant's Actions or Behavior
	SRO OAC BOP	This will depressurize the RCS outside the post trip window. It will decrease RCS pressure to the ES actuation at 1625 psig EFW actuation A loss of SCM will occur
	SRO	Direct actions from EOP-2, and EOP-3 Loss of SCM
	OAC	Monitor RCS parameters core cooling and RCS inventory Trip all RCPs within 2 minutes of loss of SCM (**CT**)
	BOP	Ensure ES equipment is properly aligned.

Op-Test No.: 1 Scenario No.: 1 Event No.: 8 Rev.: 0

Event Description: When ES actuates MUP-1B shaft fails (**MALF after MT**) leaving only 1 MUP supplying water to the core.

Time	Position	Applicant's Actions or Behavior
	BOP	Diagnose MUP-1B failure Amps indicate 25 % Total flow is about 380 gpm at 1200 psig Breaker indicates closed (red light lit) May or may not see this however this is the set up for the potential loss of core cooling with the failure of the other side MUP cooling water pump.
	SRO	Directs the BOP to ensure all ES equipment is properly aligned.
	BOP	Verifies all ES components are operating via the actuation light indications (green) for ES actuated equipment.

Op-Test No.: 1 Scenario No.: 1 Event No.: 9 Rev.: 0

Event Description: When ES actuates DCP-1B fails to start (**MALF after MT**). This must be identified and started or the crew has lost all HPI capabilities (**CT**).

Time	Position	Applicant's Actions or Behavior
	BOP	Diagnose DCP-1B failure Breaker light is green (open) ES status light is amber No amps indicated Start pump using the breaker handle Breaker close light is "LIT" (red) Amps indicated ES status light is green
	SRO	Supervise the operation of DCP-1B and cooling to the one remaining HPI pump.

Op-Test No.: 1 Scenario No.: 1 Event No.: 10 Rev.: 0

Event Description: RCP-1D will not trip (**MALF after MT**) on the loss of SCM must de-energize the bus.

Time	Position	Applicant's Actions or Behavior
	OAC	Loss of SCM Trip all RCPs RCP-1D will not trip Breaker closed light "LIT" (red)
	SRO	Supervise securing RCP-1D
	OAC	Open breaker 3104 to de-energize the 6900 V Aux Bus 3B. RCP-1D de-energizes. Trip all RCPs within 2 minutes (**CT**).

Op-Test No.: 1 Scenario No.: 1 Event No.: 11 Rev.: 0

Event Description: Once the ICS stations are in automatic trip CDP-1B (**MALF**).

Time	Position	Applicant's Actions or Behavior
	BOP	Diagnose loss of CDP-1B Breaker closed red light "OFF" Deaerator level normal light "OFF" Alarm "Condensate Pump B Trip" (N-3-1) Refer to Alarm Response (AR) Use OP-603 Condensate Section 4.15 and OP-203 for starting CDP-1A and placing it in AUTO. This will complete OP-203 and send the crew to OP-204 Power Operations
	SRO	Monitor and supervise the CDP-1B trip and start of CDP-1A.

Op-Test No.: 1 Scenario No.: 1 Event No.: 12 Rev.: 0

Event Description: When ICS stations are being transferred to automatic and while the OAC is quantifying the RCS leak rate, trip AHF-17A (**MALF**) reconfigure the ventilation to the "B" side. This is prior to the major transient.

Time	Position	Applicant's Actions or Behavior
	BOP	Diagnose the trip of AHF-17A Alarm Control Complex fan trip (F-1-1) Alarm Control Complex air flow low (F-1-2) Breaker closed light (red) is "OFF" Align ventilation to the "B" side with OP-409 section 4.18
	SRO	Direct BOP to transfer ventilation in accordance with OP-409 section 4.18

Narrative Summary:

The plant is at 23% power preparing to place the turbine on line. The BOP is to auto synchronize and load the generator (OP-203).

Once the turbine is on and the ICS stations are in automatic CDP-1B will trip due to a level switch problem. The BOP will refer to the AR procedure and OP-603, start CDP-1A and continue with the startup.

When the plant is stable RMA-6 sample pump will fail indicating a high flow condition. This will require an ITS call for 3.4.14 Condition B for RCS leakage detection instrumentation.

A control complex ventilation alarm will indicate that AHF-17A has tripped. The BOP will respond to the back of the control board to diagnose and shift ventilation for the control complex to the "B" train (OP-409).

During the power ascension the neutron error indication becomes erratic causing excessive rod motion. The OAC must take manual control of the reactor and perform all reactivity manipulations via manual control. He may also place the feedwater loop masters in manual to prevent feedwater from controlling Tave.

At about 30% power Pressurizer level transmitter will fail high, OAC will diagnose and shift level transmitter to good instrument (OP-501). A small pressurizer steam leak will follow (19.5 gpm) that will reduce RCS pressure. The SRO will enter AP-520 and commence diagnosis of the pressure decrease. A complicating factor will be the RCS spray valve block valve will not close. Therefore, RCP-1B will be tripped and then the reactor.

The reactor trip will result in the major transient of a large steam space leak from the pressurizer (160 gpm). This will further decrease RCS pressure to the ES actuation set point. When ES actuates MUP-1B will experience a shaft shear, leaving only 1 MUP in service (MUP-1C). In addition to the MUP shaft problem, DCP-1B just did not start. The BOP must identify this failure and start DCP-1B because it is the source of cooling water to the remaining MUP (CT).

The pressure will continue to decrease even with the ES until a loss of SCM occurs. The OAC must trip the remaining RCPs within 2 minutes. RCP-1D will not trip and the operator must de-energize the 6900V Aux Bus 3B at the breakers to secure RCP-1D (CT).

Once the plant is in EOP-3 and the RCPs are secured this scenario can be terminated.

Procedures used: (ARs not listed)

OP-203	AP-520	EOP-2
OP-204		EOP-3
OP-409	AI-505	EOP-13
OP-501		

SHIFT TURNOVER

A. Give the following for initial conditions selected:

1. Time in core life – 300 EFPD
2. Shift: [X] Day [ ] Swing [ ] Mid
3. Rx power and power history – 23%, shutdown for 3 days
4. Boron concentration – 1088 PPMB
5. Xenon – Increasing
6. RCS Activity - See Status Board

B. Tech. Spec. Action requirement(s) in effect:

- T.S. 3.8.1 Condition "B" for EDG-1B; SP-321 was completed 1 hour ago, due again within the next 7 hours.

C. Clearances in effect:

- EDG-1B for Governor replacement
- MUP-1A shaft replacement due to high vibration
- SWP-1C for impellor replacement
- FWP-7 motor bearing replacement

D. Significant problems/abnormalities:

- An emergency need for power exist due to other generating facilities being unavailable.

E. Evolutions/maintenance for the on-coming shift:

- Continue with turbine startup IAW OP-203 at step 4.2.22
- Auto Synch is the preferred method for closing output breakers
- Continue power escalation IAW OP-204
- Maneuvering rate limits are: Normal plant maneuvering rates

F. ROs walk down the main control boards and provide the crew with the following data:

RCS Average Temperature	_____	Make-up Tank Level	_____
RCS Pressure	_____	Turbine Load	_____
Pressurizer Level	_____	Turbine Reference	_____

G. Required Emergency Plan Implementation

[ ] Full Implementation, including all required notifications.
[ ] Initial/upgrade classifications - internal notifications.
[X] None

Target Quantitative Attributes – Scenario 1	Actual Attributes
1. Total Malfunctions (5-8)	7
2. Malfunctions after EOP entry (1-2)	2
3. Abnormal Events (2-4)	2
4. Major Transients (1-2)	1
5. EOPs entered requiring substantive actions (1-2)	2
6. EOP contingencies requiring substantive actions (0-2)	1
7. Critical Task (2-3)	2

SCENARIO OBJECTIVES:

- The operating crew will be evaluated on their ability to diagnose a pressurizer steam space leak in the Reactor Building.
- The BOP will be evaluated on his ability to respond to an engineered safeguards actuation.
- The operating crew will be evaluated on their ability to respond to a reactor trip and a loss of subcooling margin.
- The BOP and SRO will be evaluated on their ability to diagnose a tripped CDP, and a control complex fan.
- The crew will be evaluated on their ability to perform Emergency and Abnormal Operating Procedures.
- The OAC and SRO will be evaluated on their ability to diagnose the neutron error instrument failure and take corrective actions.
- The BOP and SRO will be evaluated on their ability to perform OP-203, Plant Startup.
- The SRO will be evaluated on his ability to apply ITS to the Radiation Monitoring system as it applies to the RCS leakage detection instrumentation.

Op-Test No.: 1 Scenario No.: 2 Event No.: 1 Rev.: 0

Event Description: Align RB ventilation to SW cooling OP-417 (Normal Evolution)

Time	Position	Applicant's Actions or Behavior
	BOP	Perform OP-417 Step 4.12.3 to swap RB fans cooling medium from Industrial Cooling (CI) to Service Water (SW).
	SRO	Supervise evolution for ventilation, may review ITS 3.6.6 for RB spray and Containment Cooling Systems as indicated in OP-417, this however, is not the ITS call for this scenario.

Op-Test No.: 1 Scenario No.: 2 Event No.: 2 Rev.: 0

Event Description: Once the vacuum pumps are swapped a LOOP on the "A" ES bus (**MALF**) will occur with the "B" EDG unavailable (AP-770), once the BOP enters AP-770, the breaker for "A" EDG (**MALF**) (brk 3209) will fail. This will result in the SRO making the ITS call for 3.8.1 condition A & D.

Time	Position	Applicant's Actions or Behavior
	SRO	Enter AP-770 and have BOP complete the steps for the condition of UV on an ES bus.
	BOP	Perform AP-770 steps as per plant conditions Notify personnel Isolate Letdown Restore SW/RW
	SRO	Enters ITS 3.8.1 AC-Sources operating Condition A- One required offsite circuit inoperable Condition D- One required offsite circuit inoperable AND one EDG inoperable
	BOP	When the "A" EDG breaker trips; enter AP-770 starting at the beginning step 3.1 (AI-505).

Op-Test No.: 1 Scenario No.: 2 Event No.: 3 Rev.: 0

Event Description: While the BOP is performing AP-770 then RCS pressure instrument (RC-3B-PT1) fails high (**MALF**)

Time	Position	Applicant's Actions or Behavior
	OAC	Diagnose the RCS pressure instrument failure. Alarm SASS mismatch (K-3-2) Alarm RCS Press High (J-3-1) RC-003A PIR1 recorder has pressure increasing Pressurizer heater demand goes to zero At 2355 "B' RPS channel will trip Alarm RPS channel "B" trip (J-6-1) Alarm RPS channel "B" trouble (J-6-4)
	SRO	Direct the OAC to close the PORV prior to pressure reaching 2450, the spray valve is de-energized so it will not open on the pressure failure
	OAC	Close the PORV The Spray valve, spray valve block valve, and the PORV block valve are all de-energized.
	SRO	Direct the BOP to swap the RCS pressure instruments in the SASS cabinet OP-501.
	BOP	Swap the RCS pressure input to the "A" instrument in the SASS cabinet per OP-501. May use computer point "B" R-224 to compare.

Op-Test No.: 1 Scenario No.: 2 Event No.: 4 Rev.: 0

Event Description: When the RCS is stable from the Pressure instrument failure then a "B" OTSG tube leak occurs. (40 gpm) (**MALF**)

Time	Position	Applicant's Actions or Behavior
	OAC	Diagnose OTSG Tube leak Alarm Main steam line A/B high rad monitor fail (H-1-5) Monitor Pressurizer level for change
	BOP	Verify "B" OTSG leak Check RMG-26/27 A1 indicates B OTSG (B1 MS line)
	SRO	Directs the OAC to quantify the OTSG leakage Enters EOP-6 once validated that leakage is > 1 gpm

Op-Test No.: 1 Scenario No.: 2 Event No.: 5 Rev.: 0

Event Description: From EOP-6 enter AP-510 for power reduction the ULD fails to respond (**MALF**) need to decrease power in manual using the SG/RX master hand/auto station. (Reactivity manipulation)

Time	Position	Applicant's Actions or Behavior
	SRO	Direct the OAC to decrease power in accordance with AP-510
	OAC	While depressing the ULD toggle no motion on the meter or plant response will occur. Notify the SRO and take hand control of the SG/RX master to decrease power in manual.
	SRO	Directs OAC on manual power reduction due to ICS malfunction.

Op-Test No.: 1 Scenario No.: 2 Event No.: 6 Rev.: 0

Event Description: During the rapid power reduction the OTSG tube ruptures (**MALF**) (350 gpm) (MAJOR TRANSIENT)

Time	Position	Applicant's Actions or Behavior
	OAC	Diagnose the increase leakage as a factor of pressurizer level decreasing at a faster rate.
	SRO	Follow in EOP-6 step 3.4 IF at any time Pressurizer level is <100 inches THEN trip the reactor and go to EOP-2. May direct BOP to open additional HPI valves, isolate letdown, start additional MUPs, and close MUP recirculation valves. When pressurizer level is < 100 " then direct the OAC to trip the reactor.
	OAC	Manually trip the reactor Complete Immediate actions of EOP-2

Op-Test No.: 1 Scenario No.: 2 Event No.: 7 Rev.: 0

Event Description: As a result of the overcooling (when turbine failed to trip and "B" MSSV failed open) the MSLI/MFLI fails, (**MALF**) the operator must isolate the "B" OTSG manually. (**CT**)

Time	Position	Applicant's Actions or Behavior
	BOP	When directed by EOP-5 to actuate MSLI/MFLI pushing the buttons for the "B" OTSG has no effect the lights do not actuate and the isolation does not occur. Manually isolate the "B" OTSG per EOP-5 step 3.6
	SRO	Direct the BOP in isolation of the "B" OTSG per EOP-5 step 3.6

Op-Test No.: 1 Scenario No.: 2 Event No.: 8 Rev.: 0

Event Description: When the reactor is tripped the turbine fails to trip (**MALF**) EOP-2 contingency removes the turbine by closing the MSIVs. (**CT**)

Time	Position	Applicant's Actions or Behavior
	OAC	During the Immediate actions of EOP-2 the TVs and GVs are NOT closed. Must perform the contingency step 2.5
	SRO	Monitor the plant and operator actions, when the symptom scan is done or when the symptom is present after the symptoms scan was completed. Will direct transition to EOP-5 for Overcooling

Op-Test No.: 1 Scenario No.: 2 Event No.: 9 Rev.: 0

Event Description: When the reactor tripped "B" OTSG MSSV fails open (**MALF**) this provides a release path from the leaking OTSG to the environment.

Time	Position	Applicant's Actions or Behavior
	CREW	Monitor the Control board camera of the MSSV and identify that one MSSV is open on the "B" side.
	SRO	This will have a more severe consequence if the "B" OTSG is not manually isolated. The OTSG should indicate dry, the leakage into the OTSG is steaming out the MSSV

Op-Test No.: 1 Scenario No.: 2 Event No.: 10 Rev.: 0

Event Description: Once the ventilation is swapped and prior to the LOOP trip ARP-1A (**MALF**).

Time	Position	Applicant's Actions or Behavior
	BOP	Diagnose the ARP trip and potential loss of vacuum Alarm Condenser vacuum pump trip (N-1-2) Alarm Condenser vacuum pump trouble (N-1-3) ARP-1A breaker indicates open (green) lights "LIT"
	SRO	Direct BOP to Alarm Response and supervise the vacuum pump transfer to the standby pump.
	BOP	Alarm Procedure directs starting the standby vacuum pump (ARP-1B) Start ARP-1B, breaker indicates closed (red) is "LIT" Monitor condenser vacuum on main control board.

NARRATIVE SUMMARY:

The plant is at 100% power; per the turnover sheet the RB ventilation needs to be transferred to the Service Water system for maintenance on the Industrial Cooling System. (OP-417)

When the ventilation transfer is completed ARP-1B will trip. The BOP will refer to the AR, will start ARP-1A, and monitor condenser vacuum.

Once the plant is stable a loss of offsite power to the "A" ES bus will occur. The "A" EDG will start and load onto the bus. When the operator has entered AP-770 and progressing then the "A" EDG breaker (3209) will fail open. This will leave the plant with only the "B" ES bus energized from its offsite source. The BOP will return to the first step of AP-770 and start the recovery of plant systems again. (AP-770)

The SRO will identify that he is in ITS 3.8.1 AC-sources operating; Condition A – One required offsite circuit inoperable, and Condition D – One required offsite circuit inoperable AND one EDG inoperable.

RCS pressure instrument "B" fails high over 5 minutes, this affects pressurizer heaters, spray and the PORV operation. Due to the loss of power the spray valve does not respond, however the heaters demand will go to zero. The operator will need to identify that the PORV will open when pressure reaches 2450. They should swap to a good instrument in the SASS cabinet, or close the PORV and its block valve prior to it opening. (OP-501)

A 40 gpm tube leak will initiate annunciator and radiation monitor alarms. The OAC should quantify the leakage as greater than 1 gpm in the "B" OTSG. This will prompt the SRO to enter EOP-6, OTSG Tube Rupture. The crew will need to start a plant shutdown (AP-510).

When the OAC depresses the ULD toggle to decrease power there is no response, he will need to take manual control of the SG/RX master control station and reduce power manually. When power is decreased to around 90%, the initial tube leak will become a tube rupture of approximately 350 gpm.

The MUP should have been started by now from the loss of power but the crew will not be able to keep the plant on line and will need to trip the reactor by procedure. When the reactor trips the turbine fails to trip, a contingency action will have the operator close the MSIVs (CT). At this time the "B" MSSV will stick open. This results in a plant overcooling, along with a release to the environment from the leaking OTSG. Because the turbine does not trip the operator will have to remember to open the turbine output breakers, or the procedure will identify it later.

The MSLI/MFLI does not automatically actuate, the operator must manually isolate feedwater to the "B" OTSG to minimize the overcooling (CT).

With the plant in EOP-5 and the "B" OTSG isolated except for the primary to secondary leakage steaming out the MSSV this scenario may be terminated.

Procedures used:

OP-417	AP-510	EOP-2
OP-501	AP-770	EOP-5
	AI-505	EOP-6

SHIFT TURNOVER

A. Give the following for initial conditions selected:

1. Time in core life – 300 EFPD
2. Shift: [X] Day [ ] Swing [ ] Mid
3. Rx power and power history – 100%
4. Boron concentration – 1088 PPMB
5. Xenon – Equilibrium
6. RCS Activity - See Status Board

B. Tech. Spec. Action requirement(s) in effect:

- T.S. 3.8.1 Condition "B" for EDG-1B; SP-321 was completed 1 hour ago, due again within the next 7 hours.

C. Clearances in effect:

- EDG-1B for Governor replacement
- MUP-1A shaft replacement due to high vibration
- SWP-1C for impellor replacement
- FWP-7 motor bearing replacement

D. Significant problems/abnormalities:

- None

E. Evolutions/maintenance for the on-coming shift:

- Align RB ventilation to SW cooling

F. ROs walk down the main control boards and provide the crew with the following data:

RCS Average Temperature	_____	Make-up Tank Level	_____
RCS Pressure	_____	Turbine Load	_____
Pressurizer Level	_____	Turbine Reference	_____

G. Required Emergency Plan Implementation

[ ] Full Implementation, including all required notifications.
[ ] Initial/upgrade classifications - internal notifications.
[X] None

Target Quantitative Attributes – Scenario 1	Actual Attributes
1. Total Malfunctions (5-8)	6
2. Malfunctions after EOP entry (1-2)	3
3. Abnormal Events (2-4)	2
4. Major Transients (1-2)	1
5. EOPs entered requiring substantive actions (1-2)	3
6. EOP contingencies requiring substantive actions (0-2)	1
7. Critical Task (2-3)	2

SCENARIO OBJECTIVES:

- The BOP will be evaluated on his ability to isolate an OTSG when main feedwater isolation circuitry fails.
- The SRO will be evaluated on his ability to apply ITS to the electrical system.
- The OAC and SRO will be evaluated on their ability to diagnose a RCS pressure instrument failure and take corrective actions.
- The OAC and SRO will be evaluated on their ability to diagnose a failure of the ULD and reduce power using manual ICS control.
- The BOP will be evaluated on their ability to diagnose a potential loss of condenser vacuum and to take corrective actions.
- The crew will be evaluated on their ability to perform Emergency and Abnormal Operating Procedures.
- The crew will be evaluated on their ability to diagnose an OTSG tube leak and to take appropriate actions.

Op-Test No.: 1 Scenario No.: 3 Event No.: 1 Rev.: 0

Event Description: Turnover sheet identifies this task to pump the RCDT to the MWST (NORMAL EVOLUTION)

Time	Position	Applicant's Actions or Behavior
	BOP	Pump the RCDT in accordance with OP-407J, section 4.6, step 4.6.5
	SRO	Monitor the evolution performed by the BOP operator.

Op-Test No.: 1 Scenario No.: 3 Event No.: 2 Rev.: 0

Event Description: When the plant is stable then DPDP-5A fails (**MALF**) and the SRO makes the call for ITS 3.8.9 Condition C.

Time	Position	Applicant's Actions or Behavior
	CREW	Diagnose the loss of DPDP-5A ALARMS: RB Spray Actuation A (B-1-1) Chill Water (F-1-7) CRD AC DC brk shunt trip loss of power (J-2-6) Lockout relay DC power loss (O-3-9) Cross-tie blocked loss of DC (Q-4-3) Breaker 1662 Trip (R-2-1)
	SRO	Declares ITS 3.8.9 Condition C - One DC electrical power distribution subsystem inoperable Identifies affected components from OP-700E for DPDP-5A This identifies that EFV-57 and 58 are failed open with no DC power. Effectively making EFP-3 unavailable (EFP-1 also).

Op-Test No.: 1 Scenario No.: 3 Event No.: 3 Rev.: 0

Event Description: Once the loss of DC power is addressed then SWV-82 fails closed (**MALF**) this removes cooling water to the RCP-1C. Need to reduce power and secure RCP-1C.

Time	Position	Applicant's Actions or Behavior
	BOP	Diagnose that SWV-82 is closed Alarm RC Pump C cooling water flow low (I-3-3) Valve indicates green light lit (valve closed) Attempt to re-open SWV-82, the valve will not reposition. May call the PPO to try to manually open the valve.
	SRO	Start 5 minute time limit to secure RCP-1C Enter AP-510 Rapid Power Reduction When power is less than 75%, or 5 minutes has elapsed, direct the OAC to trip RCP-1C
	OAC	Commence power reduction in accordance with AP-510 direction from the SRO When directed secure RCP-1C Monitor plant parameters for re-ratio of feedwater

Op-Test No.: 1 Scenario No.: 3 Event No.: 4 Rev.: 0

Event Description: When RCP-1C is tripped ICS fails to re-ratio (**MALF**) this requires manual feedwater control with both MFW loop masters.

Time	Position	Applicant's Actions or Behavior
	SRO	Monitor the re-ratio of feedwater flows. Supervise the control of MFW. May direct the BOP to control RCS pressure using pressurizer spray.
	OAC	Take manual control of both Feedwater loop master controls Delta Tc indicates A is hotter than B Feed more to A, less to B Stabilize plant and fine tune total feedwater flow using delta Tc indication.
	BOP	Monitor RCS pressure, may have to open the spray valve in manual for more flow. Once pressure is stable if manually opened spray valve must re-close valve.
	SRO	Review AP-545 for loss of RCP runback parameters

Op-Test No.: 1 Scenario No.: 3 Event No.: 5 Rev.: 0

Event Description: When the plant is stable from the RCP trip then the "B" MFW pump has an oil leak (**MALF**) and must be secured. With ICS in manual this is the reactivity manipulation.

Time	Position	Applicant's Actions or Behavior
	OAC	Diagnose the oil leak on the "B" MFW pump Alarm FWP B Emergency oil pump auto start (L-2-5) May call SPO to investigate
	SRO	Direct the OAC to commence down power due to the oil leak on the B MFW pump refer to AP-545, however, ICS is in manual.
	OAC	Decrease power using the loop master to reduce feedwater flow and wait for the plant to track the decrease.

Op-Test No.: 1 Scenario No.: 3 Event No.: 6 Rev.: 0

Event Description: When the "B" MFWP is tripped the "A" MFWP trips (**MALF**) also causing a loss of all MFW.

Time	Position	Applicant's Actions or Behavior
	OAC	Once power is low enough or if directed trip the "B" MFW pump. Diagnose that the "A" MFW pump also tripped and that the Reactor should have tripped from the loss of all feedwater
	SRO	Direct the OAC to take the Immediate Actions of EOP-2

Op-Test No.: 1 Scenario No.: 3 Event No.: 7 Rev.: 0

Event Description: The loss of MFW should trip the reactor, however, all the rods do not fall. An ATWAS (**MALF**) condition, therefore the operator must trip the rods by de-energizing the bus.

Time	Position	Applicant's Actions or Behavior
	OAC	Opens breakers 3305 and 3312, then re-closes breaker 3305 and 3312. Contingency action of EOP-2 step 2.2 Diagnose the following: No trip confirm No bias on the TBVs SPDS displays do not go to the post trip window
	SRO	Complete EOP-2 Immediate actions and perform Symptom Scan Identify Inadequate Heat Transfer, transition to EOP-4

Op-Test No.: 1 Scenario No.: 3 Event No.: 8 Rev.: 0

Event Description: This is triggered off the EFIC actuation, where EFP-2 trips on actuation (MALF) leaving no feedwater.

Time	Position	Applicant's Actions or Behavior
	BOP	Diagnose the loss of EFP-2 Alarm EF Pump 2 trips (H-7-4) No EFW flow on EFP-2 flow indicator
	SRO	Verify no Feedwater capabilities Both MFW pumps are tripped EFP-3 and EFP-1 are not available due to the loss of DC power EFP-2 is tripped AFW pump 7 is OOS and tagged Direct actions in EOP-4

Op-Test No.: 1 Scenario No.: 3 Event No.: 9 Rev.: 0

Event Description: Total loss of feedwater has occurred and HPI/PORV cooling is the success path in EOP-4.

Time	Position	Applicant's Actions or Behavior
	BOP	Monitor RCS incore temperatures increase RCS pressure increase As directed actuate manual HPI, identify that the "A" side HPI manual actuation will not work due to the loss of DC power.
	SRO	Direct actions in EOP-4

NARRATIVE SUMMARY:

The plant is at 100% power, RCV-8 pressurizer code safety valve is leaking. The BOP needs to pump the RCDT back to normal operating level (OP-407J).

The disconnect switch 22 is damaged by scaffolding and results in tripping which de-energizes DPDP-5A. The loss of DPDP-5A will provide multiple alarms, and renders the emergency feedwater valves on EFP-3/1 inoperable (failed open) (OP-700E). This will require the SRO to make the ITS call 3.8.9 Condition C – One DC electrical power distribution subsystem inoperable.

Once the plant is stable then SWV-82 fails closed, it will not open and the plant power must be reduced to <75% (AP-510). RCP-1C must be tripped within 5 minutes due to the loss of cooling water (AP-545).

When RCP-1C is tripped main feedwater does not re-ratio, the OAC needs to take manual control of the feedwater loop masters. The BOP should monitor and control RCS pressure using the spray valve as necessary during the manual control of feedwater.

An oil leak develops on the "B" MFW pump; the plant will need to reduce power to less than 45% per AP-545. This power reduction will be in manual due to the feedwater control. When the "B" MFW pump is tripped the "A" pump also trips. A total loss of main feedwater provides an RPS trip signal.

The RPS trips, however the rods do not trip (ATWAS), the OAC must take contingency actions from EOP-2 to de-energize the control rods (CT).

EFIC will actuate and EFP-2 will trip on the actuation signal. This is now a complete loss of all feedwater (EOP-4).

This drill will terminate when the operators have established HPI/PORV cooling of the RCS (CT).

Procedures used:

OP-407J	AP-510	EOP-2
OP-700E	AP-545	EOP-4
		EOP-14

SHIFT TURNOVER

A. Give the following for initial conditions selected:

1. Time in core life – 300 EFPD
2. Shift: [X] Day [ ] Swing [ ] Mid
3. Rx power and power history – 100%
4. Boron concentration – 1088 PPMB
5. Xenon – Equilibrium
6. RCS Activity - See Status Board

B. Tech. Spec. Action requirement(s) in effect:

- None

C. Clearances in effect:

- MUP-1A shaft replacement due to high vibration
- SWP-1C for impellor replacement
- FWP-7 motor bearing replacement

D. Significant problems/abnormalities:

- RCV-8 weeping

E. Evolutions/maintenance for the on-coming shift:

- RCDT alarm high from last shift, pump RCDT to the "B" RCBT.

F. ROs walk down the main control boards and provide the crew with the following data:

RCS Average Temperature	_____	Make-up Tank Level	_____
RCS Pressure	_____	Turbine Load	_____
Pressurizer Level	_____	Turbine Reference	_____

G. Required Emergency Plan Implementation

[ ] Full Implementation, including all required notifications.
[ ] Initial/upgrade classifications - internal notifications.
[X] None

Target Quantitative Attributes – Scenario 1	Actual Attributes
1. Total Malfunctions (5-8)	6
2. Malfunctions after EOP entry (1-2)	1
3. Abnormal Events (2-4)	2
4. Major Transients (1-2)	1
5. EOPs entered requiring substantive actions (1-2)	2
6. EOP contingencies requiring substantive actions (0-2)	1
7. Critical Task (2-3)	2

SCENARIO OBJECTIVES:

- The crew will be evaluated on their ability to reduce power to within the capacity of one feedwater pump, and conduct a manual runback.
- The OAC will diagnose that an ATWAS has occurred and take appropriate corrective actions.
- The SRO will be evaluated on his ability to apply ITS to the loss of DC power condition.
- The crew will be evaluated on their ability to diagnose a failure of feedwater to re-ratio following removal of the reactor coolant pump from service and compensate for this failure.
- The crew will be evaluated on their ability to diagnose a loss of cooling to an RCP and remove the pump from service.
- The crew will be evaluated on their ability to respond to a loss of all feedwater and initiate HPI/PORV cooling.

CRYSTAL RIVER UNIT 3
ADMINISTRATIVE JOB PERFORMANCE MEASURE

Task: Perform Estimated Critical Boron

Alternate Path: N/A

JPM #: A1A (2K2) [BANK # 234]

K/A Rating/Importance: 001A4.10/3.5/3.9

Task Number/Position: 1150102011/RO

Task Standard: Calculate an ECB

Preferred Evaluation Location: **Preferred Evaluation Method:**

Simulator ___ **In-Plant**___ **Admin** _x_ **Perform** _x_ **Simulate** ____

References:
1. OP-210 Rev. 58

Validation Time: 40 min. **Time Critical:** No

==========

Candidate: _____ **Time Start:** _____
Printed Name **Time Finish:** _____

Performance Rating: **SAT** _____ **UNSAT** _____ **Performance Time:** _____

Examiner: _____ _____/_____
Printed Name **Signature** **Date**

Comment:

_____
_____
_____
_____

Tools/Equipment/Procedures Needed:

1. SP-210 Enclosure 4 and 5
2. Calculator
3. OP-103C

READ TO THE OPERATOR

Directions to the Student:

I will explain the initial conditions, and state the task to be performed. All steps, including any required communications, shall be performed for this JPM. I will provide initiating cues and reports on other actions when directed by you. Ensure you indicate to me when you understand your assigned task. To indicate that you have completed your assigned task, return the handout sheet to the examiner.

Initial Conditions:
The plant has just completed a 27-day outage, the core has 10 EFPD, and it had to shutdown for the last 24 hours to repair a MSIV. Due to the time frame the reactor engineer has provided the following data:

Xenon –2.43 DeltaK/K Samarium -.03 DeltaK/K

Plant conditions are as follows:

RCS boron is 2250 ppm RCS temperature is 532 °F

Anticipated critical rod position is 40% on group 6, with group 8 rods at 30%.
Boron 10 atom percent is 19.8

Initiating Cues:
You are requested to perform an ECB.

START TIME: _____

STEP 1: Obtain a copy of appropriate procedure. **STANDARD:** N/A **EXAMINER CUE:** **EXAMINER NOTE:** **Provide candidate with a clean copy of OP-210 Enclosure 4 and 5, and OP-103C. Calculators will also be provided if the candidate does not have one.** **COMMENTS:**	SAT _____ UNSAT _____

STEP 2:	**Critical Step**
Candidate should complete OP-210 Enclosure 4 and 5. **STANDARD**: Candidate completes. OP-210. Candidate returns materials to you. **EXAMINER CUE:** **EXAMINER NOTE:** **See attached key for answers; each reactivity listed should be within ± 0.05 %Δk/k.** **COMMENTS:**	SAT _____ UNSAT _____
END OF TASK	

TIME STOP _____

KEY

Enclosure 4

1. 10 EFPD X .991 = 9.91 EFPD
Curve 1 +15.375

2. Xenon - 2.43

3. Samarium - 0.03

4. Temperature 532 therefore no factor 0000

5. Rod Index curve Group 1-7 -1.541
Group 8 -0.1605

6. Sum 11.2135DK/K
6b. HZP inverse boron worth 148.8343
6c. Multiply
6d. ECB 1668.95 (round to 1669) ppm
6e. Boron 10 a/o 19.8
6f. Adjusted B-10 a/o 1669 ppm
6g. +1.0 DK/K 12.2135 DK/K
6h. –1.0 DK/K 10.2135 DK/K
6i. Multiply +1 1817.78 (round to 1818) ppm
6j. +1 boron 1818 ppm
6k. +1 B-10 a/o 1818 ppm
6l. Multiply –1 1520 ppm
6m. –1 boron 1520 ppm
6n. –1 B-10 a/o 1520 ppm

TOLERANCE on boron of ± 100 ppm (this is approximately 5 %)

Enclosure 5

Step 1 a single ECB is necessary may only use enclosure 4
Step 2 rod positions are given just a repeat
Step 3 1520 / 1669 / 1818 Boron concentrations (–1 / ECB / +1)
Step 4 to be completed N/A
Step 5 to be completed N/A
Step 6 data transfer may or may not complete

CANDIDATE CUE SHEET

(TO BE RETURNED TO EXAMINER UPON COMPLETION OF TASK)

Initial Conditions:

The plant has just completed a 27-day outage, the core has 10 EFPD, and it had to shutdown for the last 24 hours to repair a MSIV. Due to the time frame the reactor engineer has provided the following data:

Xenon –2.43 DeltaK/K Samarium -.03 DeltaK/K

Plant conditions are as follows:

RCS boron is 2250 ppm RCS temperature is 532 °F

Anticipated critical rod position is 40% on group 6, with group 8 rods at 30%.
Boron 10 atom percent is 19.8

Initiating Cues:

You are requested to perform an ECB.

CRYSTAL RIVER UNIT 3
ADMINISTRATIVE JOB PERFORMANCE MEASURE

Task: Operate the plant within the guidelines specified for mode 5 outages and reduced reactor coolant system RCS inventory operations.

Alternate Path: N/A

JPM #: A1B (2K2) [NEW]

K/A Rating/Importance: 025AA1.02 3.8/3.9

Task Number/Position: 1190102001/RO

Task Standard: Perform a time to boil / core uncovery calculation

Preferred Evaluation Location: **Preferred Evaluation Method:**

Simulator ___ **In-Plant**___ **Admin** _x_ **Perform** _x_ **Simulate** ____

References:
1. OP-103H Rev. 3

Validation Time: 30 min. **Time Critical**: No

==========

Candidate: _____ **Time Start:** _____
Printed Name **Time Finish:** _____

Performance Rating: **SAT** _____ **UNSAT** _____ **Performance Time:** _____

Examiner: _____ _____/_____
Printed Name **Signature** **Date**

Comment:

_____
_____
_____
_____

Tools/Equipment/Procedures Needed:

1. OP-103H
2. Calculator
3.

READ TO THE OPERATOR

Directions to the Student:

I will explain the initial conditions, and state the task to be performed. All steps, including any required communications, shall be performed for this JPM. I will provide initiating cues and reports on other actions when directed by you. Ensure you indicate to me when you understand your assigned task. To indicate that you have completed your assigned task, return the handout sheet to the examiner.

Initial Conditions:

Plant is in MODE 6,
RCS temperature is 100°F,
RCS pressure 0 psig,
Nozzle dams installed,
RCS vessel level 131 feet.
Refueling in progress, 120 burned fuel assemblies in the core.
Plant was shutdown at 0800 01/12/02
Current date is 0800 01/19/02

Initiating Cues:
You are requested to perform a time to boil / time to core uncovery calculation (OP-103H).

START TIME: _____

STEP 1: Obtain a copy of appropriate procedure. **STANDARD:** N/A **EXAMINER CUE:** **EXAMINER NOTE:** **Provide candidate with a clean copy of OP-103H. Calculators will also be provided if the candidate does not have one.** **COMMENTS:**	SAT _____ UNSAT _____

STEP 2:	**Critical Step**
Candidate should complete OP-103H using enclosure 7 **STANDARD**: Candidate completes. OP-103H. Candidate returns materials to you. **EXAMINER CUE:** **EXAMINER NOTE:** **See attached key for answers;** **COMMENTS:**	SAT _____ UNSAT _____
END OF TASK	

TIME STOP _____

KEY	PROCEDURE 103H rev. 3
1.1	100°F
1.2	131 Ft.
1.3	120
1.4	1/12/02
1.5	1/19/02
2.0	7 Days
3.1	1.965
3.2	177/120 = 1.475
3.3	1.965 X 1.475 = 2.898375
4.0	No; the head is off the vessel, and Nozzle dams installed
5.0	No; the head is off the vessel
6.0	No; Nozzle dams installed
7.0	Yes; RCS vented, Head OFF, Nozzle dams installed
7.1	14.21
7.2	120.79
7.3	2.8983 X 14.21 = 41.85 min (40 to 43 minutes tolerance)
7.4	2.8983 X 120.79 = 350.08 min (345 to 355 minutes tolerance)
8.0	No; RCS intact

CANDIDATE CUE SHEET

(TO BE RETURNED TO EXAMINER UPON COMPLETION OF TASK)

Initial Conditions:

Plant is in MODE 6,
RCS temperature is 100°F,
RCS pressure 0 psig,
Nozzle dams installed,
RCS vessel level 131 feet.
Refueling in progress, 120 burned fuel assemblies in the core.
Plant was shutdown at 0800 01/12/02
Current date is 0800 01/19/02

Initiating Cues:

You are requested to perform a time to boil / time to core uncovery calculation (OP-103H).

CRYSTAL RIVER UNIT 3
ADMINISTRATIVE JOB PERFORMANCE MEASURE

Task: Perform RC Pump Seal Data Sheet.

Alternate Path: N/A

JPM #: A2 (2K2) [BANK #255]

K/A Rating/Importance: 003A4.04 3.1/3.0

Task Number/Position: 0150202001RO

Task Standard: Perform RC Pump Seal Data Sheet, SP-300, enclosure 2.

Preferred Evaluation Location: **Preferred Evaluation Method:**

Simulator ___ **In-Plant**___ **Admin** _x_ **Perform** _x_ **Simulate** ____

References:
1. SP-300 Rev. 176

Validation Time: 20 min. **Time Critical:** No

==========

Candidate: _____ **Time Start:** _____
Printed Name **Time Finish:** _____

Performance Rating: **SAT** _____ **UNSAT** _____ **Performance Time:** _____

Examiner: _____ _____ / _____
Printed Name **Signature** **Date**

Comment:

_____
_____
_____
_____

Tools/Equipment/Procedures Needed:

1. SP-300
2. Calculator
3.

READ TO THE OPERATOR

Directions to the Student:

I will explain the initial conditions, and state the task to be performed. All steps, including any required communications, shall be performed for this JPM. I will provide initiating cues and reports on other actions when directed by you. Ensure you indicate to me when you understand your assigned task. To indicate that you have completed your assigned task, return the handout sheet to the examiner.

Initial Conditions:

You are the REACTOR OPERATOR.

The plant is at 100% rated thermal power (N766).
Reactor inlet temperature is 557°F (R730).
RC system pressure is 2160 psig (R724).
MUT temperature is 108°F (X208).
Beginning time for seal leak-off was 0800.
Ending time for seal leak-off flow was 1200.
Seal leak-off count at the beginning time for all RCPs was 0.
Seal leak-off count at the ending time: RCP-1A, 110; RCP-1B, 92; RCP-1C, 86; RCP-1D, 120.
Seal injection flow for each pump: RCP-1A, 9 gpm; RCP-1B, 10 gpm; RCP-1C, 9 gpm; RCP-1D, 11 gpm.
All the RCPs have a controlled bleed-off flow rate of 1.5 gpm.
Component cooling water temperature is 79°F (X334).

Initiating Cues:

Given a copy of Group 15, Seal Data, you are directed to perform the RC Pump Seal Data Sheet in SP-300.

START TIME: _____

STEP 1: Obtain a copy of appropriate procedure. **STANDARD:** N/A **EXAMINER CUE:** **EXAMINER NOTE:** **Provide candidate with a copy of the RC Pump Seal Data Sheet in SP-300 and Group 15 data sheet.** **COMMENTS:**	SAT _____ UNSAT _____

STEP 2: Complete SP-300 RC Pump Seal Data Sheet **STANDARD**: Candidate will complete the RC Pump Seal Data Sheet and return completed SP to examiner. **EXAMINER CUE:** **EXAMINER NOTE:** **If this JPM is conducted in the control room, allow the candidate to collect the data from plant parameters to show they can find the information. Then provide the data to complete from the cue sheet. See attached key for answers;** **COMMENTS:**	**Critical Step** SAT _____ UNSAT _____
END OF TASK	

TIME STOP _____

KEY

SP-300 Enclosure 2 page 5

RCS inlet temperature	557°F
RCS Pressure	2160 psig
Rx Power	100%
MUT Temperature	108°F

RCP "A" 110 X .25 / 240 min = .1145 -.05 = .064

RCP "B" 92 X .25 / 240 min = .0958 -.05 = .045

RCP "C" 86 X .25 / 240 min = .0895 -.05 = .039

RCP "D" 120 X .25 / 240 min = .125 -.05 = .075

CANDIDATE CUE SHEET

(TO BE RETURNED TO EXAMINER UPON COMPLETION OF TASK)

Initial Conditions:

You are the REACTOR OPERATOR.

The plant is at 100% rated thermal power (N766).
Reactor inlet temperature is 557°F (R730).
RC system pressure is 2160 psig (R724).
MUT temperature is 108°F (X208).
Beginning time for seal leak-off was 0800.
Ending time for seal leak-off flow was 1200.
Seal leak-off count at the beginning time for all RCPs was 0.
Seal leak-off count at the ending time: RCP-1A, 110; RCP-1B, 92; RCP-1C, 86; RCP-1D, 120.
Seal injection flow for each pump: RCP-1A, 9 gpm; RCP-1B, 10 gpm; RCP-1C, 9 gpm; RCP-1D, 11 gpm.
All the RCPs have a controlled bleed-off flow rate of 1.5 gpm.
Component cooling water temperature is 79°F (X334).

Initiating Cues:

Given a copy of Group 15, Seal Data, you are directed to perform the RC Pump Seal Data Sheet in SP-300.

CRYSTAL RIVER UNIT 3
ADMINISTRATIVE JOB PERFORMANCE MEASURE

Task: Comply with station health physics procedures RSPs, HPPs.

Alternate Path: N/A

JPM #: A3 (2K2) [NEW]

K/A Rating/Importance: G2.3.4 / 2.5/3.1

Task Number/Position: 1190104005 /AO, RO, SRO

Task Standard: Using a survey map, and personnel exposures determine stay times and dose rates using RSP-101 and HPP-300.

Preferred Evaluation Location: **Preferred Evaluation Method:**

Simulator ___ **In-Plant**___ **Admin** _x_ **Perform** _x_ **Simulate** ____

References:
1. RSP-101 and HPP-300

Validation Time: 45 min. **Time Critical:** No

==========

Candidate: _____ **Time Start:** _____
Printed Name **Time Finish:** _____

Performance Rating: **SAT** _____ **UNSAT** _____ **Performance Time:** _____

Examiner: _____ _____ / _____
Printed Name **Signature** **Date**

Comment:

_____
_____
_____
_____

Tools/Equipment/Procedures Needed:

1. HP-300
2. RSP-101
3. Provided Survey

READ TO THE OPERATOR

Directions to the Student:

I will explain the initial conditions, and state the task to be performed. All steps, including any required communications, shall be performed for this JPM. I will provide initiating cues and reports on other actions when directed by you. Ensure you indicate to me when you understand your assigned task. To indicate that you have completed your assigned task, return the handout sheet to the examiner.

Initial Conditions:
A work platform must be erected over the two letdown coolers inside the RB.
The individual that erects the platform must stand between the two coolers for 45 minutes.
The attached survey 01-10-0127 identifies the dose rates for the letdown room, the attached sheet provides the data on the individuals that can perform this work

Initiating Cues:

For each of the three individuals listed; identify **WHY** and/or **WHY NOT** they can perform this work.
For dose calculations only consider the dose during the 45 minute job, all other doses for transient and escorts are not to be used.

START TIME: _____

STEP 1: Obtain a copy of appropriate procedure. **STANDARD:** Operator obtains copies of HPP-300 and RSP-101. **EXAMINER CUE:** **EXAMINER NOTE:** **Provide operator with the pre-marked survey, and the data sheet with each individual's information.** **COMMENTS:**	SAT _____ UNSAT _____

STEP 2:	**Critical Step**
Determination of radiation conditions. **STANDARD**: Operator determines that: SEE ATTACHED KEY **EXAMINER CUE:** **EXAMINER NOTE:** **Provide Operator with the pre-marked survey.** **COMMENTS:**	SAT _____ UNSAT _____

STEP 3:	**Critical Step**
Determinations of stay times. **STANDARD**: Operator determines: SEE ATTACHED KEY **EXAMINER CUE:** **EXAMINER NOTE:** **COMMENTS:**	SAT _____ UNSAT _____
END OF TASK	

TIME STOP _____

KEY

WORKER HISTORY

Worker #1 John Paul Jones

1. Contract worker with completed NRC form 5
2. This worked is not badged at CR3 so he will be issued dosimetry and escorted **(The escort does not need to be considered for the dose, they will be in a low dose area)**
3. 2.0 REM TEDE (from another work location)
   Can complete the job in stay time for 1.5 Rem (45 minutes) Would be able to do the job, limits are the same as other radiation workers (2 REM CR3; total 4)

Worker #2 George Custer

1. CR3 employee with completed NRC form 5 and yellow badge.
2. 1.5 Rem TEDE for the year
   CAN NOT do the job, would exceed 2 Rem CR3 dose

Worker #3 Don Corleone

1. Contract worker with completed NRC form 5 and yellow badge.
2. 3.5 Rem TEDE (from another work location)
   CAN NOT do the job, would exceed 4 Rem total dose.

NO SPECIAL AUTHORIZATIONS OR EXTENUATING CIRCUMSTANCES ARE ALLOWED.

CANDIDATE CUE SHEET

(TO BE RETURNED TO EXAMINER UPON COMPLETION OF TASK)

Initial Conditions:

A work platform must be erected over the two letdown coolers inside the RB.
The individual that erects the platform must stand between the two coolers for 45 minutes.
The attached survey 01-10-0127 identifies the dose rates for the letdown room, the attached sheet provides the data on the individuals that can perform this work

Initiating Cues:

For each of the three individuals listed; identify **WHY** and/or **WHY NOT** they can perform this work. For dose calculations only consider the dose during the 45 minute job, all other doses for transient and escorts are not to be used.

DATA SHEET

WORKER HISTORY

Worker #1 John Paul Jones

1. Contract worker with completed NRC form 5
2. This worked is not badged at CR3 so he will be issued dosimetry and escorted **(The escort does not need to be considered for the dose, they will be in a low dose area)**
3. 2.0 REM TEDE (from another work location)

Worker #2 George Custer

1. CR3 employee with completed NRC form 5 and yellow badge.
2. 1.5 Rem TEDE for the year

Worker #3 Don Corleone

1. Contract worker with completed NRC form 5 and yellow badge.
2. 3.5 Rem TEDE (from another work location)

NO SPECIAL AUTHORIZATIONS OR EXTENUATING CIRCUMSTANCES ARE ALLOWED.

Florida Power

HEALTH PHYSICS SURVEY AND TRANSMITTAL SHEET

6483

ROUTINE | | | - | | | | | | | | ☐ SPECIAL

SURVEY NUMBER 011-110-0127

RWP 012040 TIME 2330

SURVEY DATE 10-04-01

RESPIRATORY PROTECTION FACTOR	BUILDING	ELEVATION	POWER LEVEL	COMPONENT ID
N/A ☒	RB	95	Ø	

LOCATION OLD LETDOWN COOLER ROOM

JOB EVOLUTION PRE-SHIELDING

REMARKS

SMEARS NA THRU <1000 dpm/100cm² β - γ UNLESS OTHERWISE NOTED

α DENOTES SMEARS COUNTED FOR ALPHA, ALL RESULTS <20 dpm/100cm² UNLESS NOTED BELOW

SMEAR NO.	βγ ACTIVITY (dpm/100cm²)	SMEAR NO.	βγ ACTIVITY (dpm/100cm²)	SMEAR NO.	βγ ACTIVITY (dpm/100cm²)

SURVEY TECH. (Print Last Name) Holcomb		TLD No. V112
ANALYSIS TECH. (Print Last Name)		TLD No.
OTHER TECH. (Print Last Name)		TLD No.

METERS / AIR SAMPLERS

Model No.	Tag No.	Cal Due
Extender	10727	2/02

COUNTING EQUIPMENT USED

MODEL NO.				
TAG NO.				
CAL DUE				
BKG.				
MDC				
MDA				
EFF				

AIR SAMPLE NO.	LOCATION OR WORK IN PROGRESS	P or C	FLOW RATE	TIME ON	TIME OFF	VOLUME (cc)	DPM OR NCPM	EFF.	ACTIVITY (µCi/cc)	ISO Y/N
△										
△										
△										
△										

REVIEW BY (CHPT)	INITIALS	TLD NO	DATE	UPDATE	HPS
R. Tromp	R7	4438	10-5-01	R7	Ac

L:\E&RC\HP\\forms\hpoffice\survxmit.doc

HPP-202A

Florida Power

MISCELLANEOUS SURVEY SHEET

SURVEY NUMBER 01-10-0127

AREA OR ITEM BEING SURVEY OLD LETDOWN COOLER ROOM

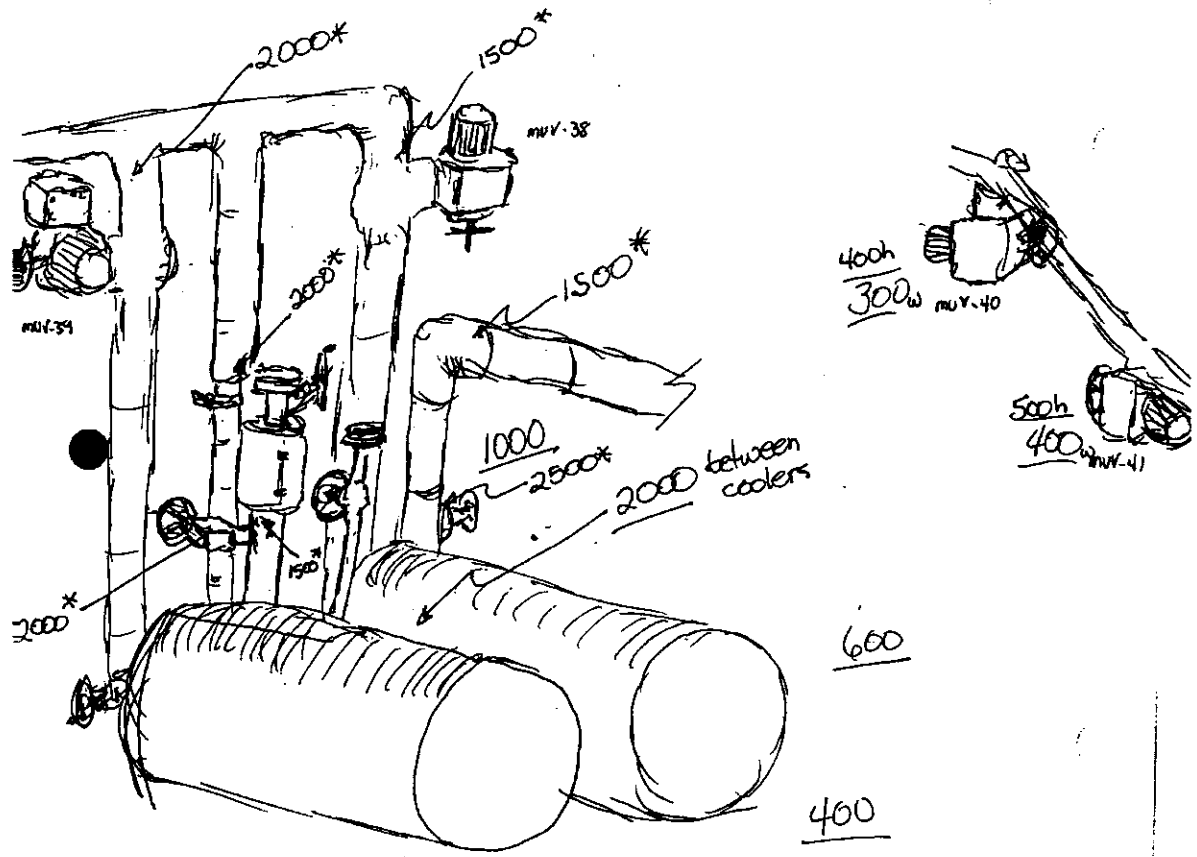

300

REMARKS:

All dose rates in mRem/hr unless otherwise noted

No beta radiation detected unless otherwise noted

* Denotes contact reading

ω = waist level
h = head level

Rev. 7/87

RET: Life of Plant RESP: Health Physics 912 820

CRYSTAL RIVER UNIT 3
ADMINISTRATIVE JOB PERFORMANCE MEASURE

Task: Complete an Off-Site Dose Assessment during Radiological Emergencies (Control Room Method).

Alternate Path: N/A

JPM #: A4R (2K2) [BANK #306]

K/A Rating/Importance: G 2.3.10 2.9/3.3

Task Number/Position: 0150202001/RO

Task Standard: Complete an Off-Site Dose Assessment during Radiological Emergencies (Control Room Method), EM-204A

Preferred Evaluation Location: **Preferred Evaluation Method:**

Simulator ___ **In-Plant**___ **Admin** _x_ **Perform** _x_ **Simulate** ____

References:
1. EM-204A Rev 23

Validation Time: 20 min. **Time Critical**: No

==========

Candidate: _____ **Time Start:** _____
Printed Name **Time Finish:** _____

Performance Rating: **SAT** _____ **UNSAT** _____ **Performance Time:** _____

Examiner: _____ _____ / _____
Printed Name **Signature** **Date**

Comment:

_____
_____
_____
_____

Tools/Equipment/Procedures Needed:

1. EM-204A
2. Calculator

READ TO THE OPERATOR

Directions to the Student:

I will explain the initial conditions, and state the task to be performed. All steps, including any required communications, shall be performed for this JPM. I will provide initiating cues and reports on other actions when directed by you. Ensure you indicate to me when you understand your assigned task. To indicate that you have completed your assigned task, return the handout sheet to the examiner.

Initial Conditions:

You are the REACTOR OPERATOR.

A Radiological Emergency is in progress.
RM-A2 low-range gas channel reads 6000 cpm.

Initiating Cues:

You are directed to perform EM-204A.

START TIME: _____

STEP 1: Obtain a copy of appropriate procedure. **STANDARD:** Candidate obtains a copy of EM-204A. **EXAMINER CUE:** **EXAMINER NOTE:** **Provide candidate with a copy of the EM-204A.** **COMMENTS:**	SAT _____ UNSAT _____

STEP 2: Completes EM-204A Enclosure 1. **STANDARD:** Candidate will complete EM-204A; meteorological data may vary per candidate. **EXAMINER CUE:** **EXAMINER NOTE:** **Each completed procedure will have to be evaluated during and following the administration of the JPM.** **If this JPM is conducted in the control room, allow the candidate to collect the data from plant parameters to show they can find the information. Then provide the data to complete from the cue sheet. See attached key for answers;** **COMMENTS:**	SAT _____ UNSAT _____
END OF TASK	

TIME STOP _____

KEY

EM-204 A

Step 4.1.2	RMA-2 Low range gas channel	6000 cpm
Step 4.2.1	Sigma Theta if in Control Room	
Step 4.2.2	Primary tower Delta T	-1.50
Step 4.2.3	Wind direction (33')	268
Step 4.2.4	Wind Speed (33')	5.2
Step 4.2.4.1	Wind Speed MPH	11.648
Step 4.2.5	Stability Class	A

Step 4.3.1	DDE	4.7 E-02	THYROID	1.3 E-01	TEDE	5.9 E-02
Step 4.4.1	DDE	.009	THYROID	.025	TEDE	.011
Step 4.5.1	Duration of release			1 Hour		
Step 4.5.2	DDE	.009	THYROID	.025	TEDE	.011
Step 4.6.1	NOBLE GAS		7.9 E-03	IODINE		7.9 E-05
Step 4.6.2	Affected Sectors			DEF		
Step 4.7.1	Signature					

DATA Sheet for completion after data taken at plant indications

EM-204 A

Step 4.1.2	RMA-2 Low range gas channel	6000 cpm
Step 4.2.1	Sigma Theta if in Control Room	
Step 4.2.2	Primary tower Delta T	-1.50
Step 4.2.3	Wind direction (33')	268
Step 4.2.4	Wind Speed (33')	5.2

CANDIDATE CUE SHEET

(TO BE RETURNED TO EXAMINER UPON COMPLETION OF TASK)

Initial Conditions:

You are the REACTOR OPERATOR.

A Radiological Emergency is in progress.
RM-A2 low-range gas channel reads 6000 cpm.

Initiating Cues:

You are directed to perform EM-204A.

CRYSTAL RIVER UNIT 3
ADMINISTRATIVE JOB PERFORMANCE MEASURE

Task: Determine emergency action level for given plant conditions.

Alternate Path: N/A

JPM #: A4S (2K2) [BANK 00-23S]

K/A Rating/Importance: G2.4.41/2.3/4.1

Task Number/Position: 1150101002/SRO

Task Standard: Determine emergency action level for given plant conditions using EM-202.

Preferred Evaluation Location: **Preferred Evaluation Method:**

Simulator ___ **In-Plant**___ **Admin** _x_ **Perform** _x_ **Simulate** ____

References:
1. EM-202, Rev. 69

Validation Time: 25 min. **Time Critical**: No

==========

Candidate: _____ **Time Start:** _____
Printed Name **Time Finish:** _____

Performance Rating: **SAT** _____ **UNSAT** _____ **Performance Time:** _____

Examiner: _____ _____ / _____
Printed Name **Signature** **Date**

Comment:

_____
_____
_____
_____

Tools/Equipment/Procedures Needed:

1. EM-202

READ TO THE OPERATOR

Directions to the Student:

I will explain the initial conditions, and state the task to be performed. All steps, including any required communications, shall be performed for this JPM. I will provide initiating cues and reports on other actions when directed by you. Ensure you indicate to me when you understand your assigned task. To indicate that you have completed your assigned task, return the handout sheet to the examiner.

Initial Conditions:

You are the Superintendent of Shift Operations (SSO).

See attached data sheet

Initiating Cues:

Determine the highest emergency action level for the time line data provided. Document your answer on the first 7 blocks of Enclosure 2 of EM-202 for time 1400 based on the information provided.

At 1300 today the plant was as 100% power, the plant experiences a transient and the following 15 minute time line, of indications occur:

TIME	1315
RCS PRESSURE	45 PSIG
PRESSURIZER LEVEL	0 "
INCORES	370°F
RX BLDG SPRAY FLOW	0 GPM
RX BLDG PRESSURE	45 PSIG
RMG - 29 & 30	9 R/HR

TIME	1330
RCS PRESSURE	46 PSIG
PRESSURIZER LEVEL	0 "
INCORES	370°F
RX BLDG SPRAY FLOW	0 GPM
RX BLDG PRESSURE	46 PSIG
RMG - 29 & 30	72 R/HR

TIME	1345
RCS PRESSURE	48 PSIG
PRESSURIZER LEVEL	0 "
INCORES	370°F
RX BLDG SPRAY FLOW	0 GPM
RX BLDG PRESSURE	48 PSIG
RMG - 29 & 30	127 R/HR

TIME	1400
RCS PRESSURE	47 PSIG
PRESSURIZER LEVEL	0 "
INCORES	370°F
RX BLDG SPRAY FLOW	0 GPM
RX BLDG PRESSURE	47 PSIG
RMG - 29 & 30	245 R/HR

Based on the above information identify the highest EAL.
FOR THIS EXERCISE DO NOT USE ANY EC DISCRETION!

START TIME: _____

STEP 1: Candidate determines classification for the data provided. **STANDARD:** Candidate determines the classification: MATRIX: FUEL CLAD LOSS FACTOR +4 RCS LOSS FACTOR +4 CONTAINMENT POT LOSS +1.5 TOTAL 9.5 **GENERAL EMERGENCY** **EXAMINER CUE:** **EXAMINER NOTE:** **COMMENTS:**	**Critical Step** SAT _____ UNSAT _____
END OF TASK	

TIME STOP _____

CANDIDATE CUE SHEET

(TO BE RETURNED TO EXAMINER UPON COMPLETION OF TASK)

Initial Conditions:

You are the Superintendent of Shift Operations (SSO).

See attached data sheet

Initiating Cues:

Determine the highest emergency action level for the time line data provided. Document your answer on the first 7 blocks of Enclosure 2 of EM-202 for time 1400 based on the information provided.

At 1300 today the plant was as 100% power, the plant experiences a transient and the following time line of indications occur:

TIME	1315
RCS PRESSURE	45 PSIG
PRESSURIZER LEVEL	0 "
INCORES	370°F
RX BLDG SPRAY FLOW	0 GPM
RX BLDG PRESSURE	45 PSIG
RMG - 29 & 30	9 R/HR

TIME	1330
RCS PRESSURE	46 PSIG
PRESSURIZER LEVEL	0 "
INCORES	370°F
RX BLDG SPRAY FLOW	0 GPM
RX BLDG PRESSURE	46 PSIG
RMG - 29 & 30	72 R/HR

TIME	1345
RCS PRESSURE	48 PSIG
PRESSURIZER LEVEL	0 "
INCORES	370°F
RX BLDG SPRAY FLOW	0 GPM
RX BLDG PRESSURE	48 PSIG
RMG - 29 & 30	127 R/HR

TIME	1400
RCS PRESSURE	47 PSIG
PRESSURIZER LEVEL	0 "
INCORES	370°F
RX BLDG SPRAY FLOW	0 GPM
RX BLDG PRESSURE	47 PSIG
RMG - 29 & 30	245 R/HR

Based on the above information identify the highest EAL.

FOR THIS EXERCISE DO NOT USE ANY EC DISCRETION!

CRYSTAL RIVER UNIT 3
SIMULATOR JOB PERFORMANCE MEASURE

Task: Transfer a group of control rods to the Auxiliary Power Supply

Alternate Path: N/A

JPM #: B1A (2K2) [BANK #43]

K/A Rating/Importance: 001A4.03 / 4.0/3.7

Task Number/Position: 0010102010 / RO/SRO

Task Standard: Transfer a group of control rods to the Auxiliary Power Supply by using OP-502, Control Rod Drive System, Section 4.16, Transferring a Group or Rod to the Auxiliary Power Supply.

Preferred Evaluation Location: **Preferred Evaluation Method:**

Simulator x **In-Plant** ___ **Admin** ____ **Perform** x **Simulate** ____

References:
1. OP-502 Rev. 45

Validation Time: 15 min. **Time Critical:** No

==========

Candidate: _____ **Time Start:** _____
Printed Name **Time Finish:** _____

Performance Rating: **SAT** _____ **UNSAT** _____ **Performance Time:** _____

Examiner: _____ _____ / _____
Printed Name **Signature** **Date**

Comment:

_____
_____
_____
_____

SIMULATOR OPERATOR SETUP INSTRUCTIONS:

1. NONE

SIMULATOR OPERATOR INSTRUCTIONS:

1. Any power IC

Tools/Equipment/Procedures Needed:

1. OP-502 Rev. 39

READ TO THE OPERATOR

Directions to the Student:

I will explain the initial conditions, and state the task to be performed. All steps, including any required communications, shall be performed for this JPM. I will provide initiating cues and reports on other actions when directed by you. Ensure you indicate to me when you understand your assigned task. To indicate that you have completed your assigned task, return the handout sheet to the examiner.

Initial Conditions:

You are the Reactor Operator, the plant is stable at power, Control Rod surveillance is in progress.

Initiating Cues:

You are requested to transfer group 3 rods to the Auxiliary Power Supply. Following transfer of the group, leave the reactor diamond and demand stations in manual for further manipulations.

START TIME: _____

STEP 1: Obtain a copy of appropriate procedure. **STANDARD:.** Candidate obtains a copy of OP-502. **EXAMINER CUE:** **For purposes of this JPM assume the CRS concurs with each rod manipulation.** **EXAMINER NOTE:** **COMMENTS:**	SAT _____ UNSAT _____

STEP 2: (Step 4.16.1) **CAUTION: Tave control could go to Feedwater regulation.** Place Reactor Diamond in MANUAL. DEPRESS "MANUAL" VERIFY "MANUAL" light on, " AUTO." light is off **STANDARD**: Operator depresses the Diamond Panel MANUAL pushbutton, and observes the MANUAL light ON and the AUTO light OFF. **EXAMINER CUE:** **EXAMINER NOTE:** **COMMENTS:**	**Critical Step** SAT _____ UNSAT _____

STEP 3: (Step 4.16.2)	**Critical Step**
Place Reactor Demand control station in Hand. DEPRESS HAND VERIFY "REACTOR DEMAND" in Mini Track ("AUTO." and "HAND" lights on)	SAT _____ UNSAT _____
STANDARD: Operator depresses the HAND pushbutton on the Reactor Demand (Bailey) HAND/AUTO station and observes that both the HAND and AUTO lights are "ON". **EXAMINER CUE:** **EXAMINER NOTE:** **COMMENTS:**	

STEP 3: (Step 4.16.3)	**Critical Step**
Select GROUP SELECT Switch to desired group.	SAT _____
	UNSAT _____
STANDARD: Operator verifies that GROUP SELECT Switch is selected to Group 3.	
EXAMINER CUE:	
EXAMINER NOTE:	
COMMENTS:	

STEP 4: (Step 4.16.4) Select ALL or desired rod. Use SINGLE SELECT Switch. **STANDARD:.** Operator verifies that SINGLE SELECT Switch is selected to all. **EXAMINER CUE:** **EXAMINER NOTE:** **COMMENTS:**	**Critical Step** SAT _____ UNSAT _____

STEP 5: (Step 4.16.5) Select SEQ OR. Verify SEQ OR light "ON", SEQ light "ON". **STANDARD:.** Operator depresses the SEQ/SEQ OR pushbutton and verifies both lights "ON". **EXAMINER CUE:** **EXAMINER NOTE:** **COMMENTS:**	**Critical Step** SAT _____ UNSAT _____

STEP 6: (Step 4.16.6)	**Critical Step**
Select AUXIL. **STANDARD:.** Operator depresses the AUXIL/GROUP pushbutton and verifies AUXIL light "ON" and GROUP light "OFF". VERIFY control on light for GP 3 is "ON". **EXAMINER CUE:** **EXAMINER NOTE:** **COMMENTS:**	SAT _____ UNSAT _____

STEP 7: (Step 4.16.7) Place SPEED SELECTOR switch in JOG. **EXAMINER NOTE:** **STANDARD:** Operator rotates RUN/JOG switch to JOG and verifies SY light "ON". **EXAMINER CUE:** **EXAMINER NOTE:** **COMMENTS:**	**Critical Step** SAT _____ UNSAT _____

STEP 8: (Step 4.16.8) Select CLAMP. **STANDARD:** Operator depresses CLAMP/CLAMP RELEASE pushbutton and verifies CLAMP light "ON" and CLAMP REL light "OFF". **EXAMINER CUE:** **EXAMINER NOTE:** **COMMENTS:**	**Critical Step** SAT _____ UNSAT _____

STEP 9: (Step 4.16.9)	Critical Step
CAUTION: If Amber control ON lights for more than one group is ON, STOP, and notify CRS. Depress MAN TRANS. **STANDARD:** Operator depresses MAN TRANS pushbutton and verifies TR CF light "ON". The operator will also verify the amber CONTROL ON light for group 3 is "ON". **EXAMINER CUE:** **EXAMINER NOTE:** **COMMENTS:**	SAT _____ UNSAT _____

STEP 10: (Step 4.16.10)	**Critical Step**
Select CLAMP REL. **STANDARD:** Operator depresses CLAMP/CLAMP RELEASE pushbutton and verifies CLAMP REL light "ON" and CLAMP light "OFF". **EXAMINER CUE:** **EXAMINER NOTE:** **COMMENTS:**	SAT _____ UNSAT _____

STEP 11: (Step 4.16.11)	**Critical Step**
Select GROUP	SAT _____
	UNSAT _____
STANDARD: Operator depresses GROUP/AUXIL pushbutton and verifies GROUP light "ON" and AUXIL light "OFF". The operator will also verify the SY light "OFF".	
EXAMINER CUE:	
EXAMINER NOTE:	
COMMENTS:	

STEP 12: (Step 4.16.12) If latching Safety Rods in accordance with section 4.2, return to Section 4.2.3 after completion of this step **STANDARD:** N/A **EXAMINER CUE:** **EXAMINER NOTE:** **COMMENTS:**	**Critical Step** SAT _____ UNSAT _____

STEP 13: (Step 4.16.13)	**Critical Step**
Place SPEED SELECTOR switch in RUN.	SAT _____ UNSAT _____
STANDARD: Operator rotates RUN/JOG switch to RUN, observes the white (Diamond panel) "CONTROL ON" light for group 3 is "ON", and the amber (PI panel) "CONTROL ON" lights for rod group 3 rods is "ON".	
EXAMINER CUE:	
EXAMINER NOTE:	
COMMENTS:	

STEP 14: (Step 4.16.14)	Critical Step
Restore SINGLE SELECT Switch. Place SINGLE SELECT Switch to OFF. **STANDARD:** Operator rotates SINGLE SELECT Switch to OFF. **EXAMINER CUE:** **EXAMINER NOTE:** **COMMENTS:**	SAT _____ UNSAT _____

STEP 15: (Step 4.16.15)	Critical Step
Restore GROUP SELECT Switch. Place GROUP SELECT Switch to OFF. **STANDARD:** Operator rotates GROUP SELECT switch to OFF. **EXAMINER CUE:** **EXAMINER NOTE:** **COMMENTS:**	SAT _____ UNSAT _____

STEP 16: (Step 4.16.16) **NOTE: When in "SEQ" the Control ON lamp and Amber Control ON lamps are on for rods on the Aux Power Supply and controlling rod group (Usually group 7)** Select SEQ. Verify SEQ light "ON" and SEQ OR light "OFF". **STANDARD:** Operator depresses SEQ/SEQ OR pushbutton and verifies SEQ light "ON" and SEQ OR light "OFF". **EXAMINER CUE:** **You have transferred group 3 rods to the Auxiliary Power Supply; the JPM is complete.** **EXAMINER NOTE:** **COMMENTS:**	**Critical Step** SAT _____ UNSAT _____

END OF TASK	

TIME STOP _____

CANDIDATE CUE SHEET

(TO BE RETURNED TO EXAMINER UPON COMPLETION OF TASK)

Initial Conditions:

You are the Reactor Operator, the plant is stable at power, Control Rod surveillance is in progress..

Initiating Cues:

You are requested to transfer group 3 rods to the Auxiliary Power Supply. Following transfer of the group, leave the reactor diamond and demand stations in manual for further manipulations.

CRYSTAL RIVER UNIT 3
SIMULATOR JOB PERFORMANCE MEASURE

Task: Borate the RCS to ensure >1% SDM 73°
System: Chemical Addition

Alternate Path: Yes

JPM #: B1b (2K2) [NEW]

K/A Rating/Importance: 024AA1.17 / 3.9/3.9

Task Number/Position: 1150502013 / RO

Task Standard: Perform an emergency boration in accordance with AP-490

Preferred Evaluation Location: **Preferred Evaluation Method:**

Simulator x **In-Plant**___ **Admin** ____ **Perform** x **Simulate** ____

References:
1. AP-490 Rev. 3

Validation Time: 15 min. **Time Critical:** No

==========

Candidate: _____ **Time Start:** _____
Printed Name **Time Finish:** _____

Performance Rating: **SAT** _____ **UNSAT** _____ **Performance Time:** _____

Examiner: _____ _____ / _____
Printed Name **Signature** **Date**

Comment:

_____
_____
_____
_____

SIMULATOR OPERATOR SETUP INSTRUCTIONS:

1. Dropped rod IC
2. CAV-60 is failed where it will not open
3.
4.
5.

SIMULATOR OPERATOR INSTRUCTIONS:

Tools/Equipment/Procedures Needed:

1. AP-490
2.

READ TO THE OPERATOR

Directions to the Student:

I will explain the initial conditions, and state the task to be performed. All steps, including any required communications, shall be performed for this JPM. I will provide initiating cues and reports on other actions when directed by you. Ensure you indicate to me when you understand your assigned task. To indicate that you have completed your assigned task, return the handout sheet to the examiner.

Initial Conditions:
The plant has experienced a dropped rod. After completion of SP-421, SDM is less than 1% delta K/K which places the plant in LCO 3.1.1

Initiating Cues:
Initiate boration to restore SDM within limits.

START TIME: _____

STEP 1: Obtain a copy of appropriate procedure. **STANDARD:** Candidate obtains a copy of AP-490 **EXAMINER NOTE:** **COMMENTS:**	SAT _____ UNSAT _____

STEP 2: (step 3.1) IF entry into this procedure was directed by an EOP, THEN **GO TO** Step 3.17 in this procedure. **STANDARD**: N/A **EXAMINER CUE:** **EXAMINER NOTE:** **COMMENTS:**	SAT _____ UNSAT _____

STEP 3: (step 3.2) IF at any time, in Modes 3 through 5, AND an unacceptable increase in neutron flux exists, THEN ensure Rx is tripped. **STANDARD:** N/A **EXAMINER CUE:** **EXAMINER NOTE:** **COMMENTS:**	SAT _____ UNSAT _____

STEP 4: (step 3.3) IF in Mode 6, THEN stop core alterations and positive reactivity changes. **STANDARD:** N/A **EXAMINER CUE:** **EXAMINER NOTE:** **COMMENTS:**	SAT _____ UNSAT _____

STEP 5: (step 3.4) IF RB is occupied, THEN evacuate RB. **STANDARD:** N/A **EXAMINER CUE:** **EXAMINER NOTE:** **COMMENTS:**	SAT _____ UNSAT _____

STEP 6: (step 3.5) Notify personnel of entry into AP-490 PA announcement STA SSO (evaluate plant conditions for potential entry into the Emergency Plan) Reactor Engineer Chemistry (to sample RCS boron) **STANDARD:** Perform announcement on the PA, all others are understood as complete. **EXAMINER CUE:** **EXAMINER NOTE:** **COMMENTS:**	SAT _____ UNSAT _____

STEP 7: (step 3.6) IF RCS cooldown is in progress, THEN stop cooldown. **STANDARD:** N/A **EXAMINER CUE:** **EXAMINER NOTE:** **COMMENTS:**	SAT _____ UNSAT _____

STEP 8: (step 3.7) Stop any deborations in progress. **STANDARD:** N/A **EXAMINER CUE:** No deborations are in progress **EXAMINER NOTE:** **COMMENTS:**	SAT _____ UNSAT _____

STEP 9: (step 3.8) IF in Mode 5, OR 6, THEN **GO TO** Step 3.25 in this procedure. **STANDARD:** N/A **EXAMINER CUE:** **EXAMINER NOTE:** **COMMENTS:**	SAT _____ UNSAT _____

STEP 10: (step 3.9) IF no BAST is available, THEN **GO TO** Step 3.15 in this procedure. **STANDARD:** BAST is available **EXAMINER CUE:** **EXAMINER NOTE:** **COMMENTS:**	SAT _____ UNSAT _____

STEP 11: (step 3.10) Initiate RCS boration from BAST. 1. Open CAV-60 2. IF CAV-60 is NOT available, THEN **PERFORM** Enclosure1, Operation of the Batch Controller, in this procedure. **STANDARD:** 1. CAV-60 fails to open 2. Perform Enclosure 1 **EXAMINER CUE:** **EXAMINER NOTE:** **COMMENTS:**	**Critical Step** SAT _____ UNSAT _____

STEP 11a: (step 1.1) Adjust batch controller for feed. 1. Depress "STOP" 2. Depress "BATCH SET" 3. Enter 1200 gallons and depress "ENTER" 4. Depress upper "DISPLAY" to exit the Batch Set Mode 5. Depress "TOTAL" and verify "TOT GAL" is displayed. **STANDARD:** Operate batch controller as directed in procedure steps **EXAMINER CUE:** **EXAMINER NOTE:** **COMMENTS:**	**Critical Step** SAT _____ UNSAT _____

STEP 11b: (step 1.2) Ensure MUV-108 demand is set to "0%" (closed). 1. Depress "VALVE SET" 2. Depress "VALVE CE" 3. Ensure the entered value for MUV-108 is "0%" (closed): 4. Depress "0" 5. Depress "ENTER" 6. Depress "RUN" **STANDARD:** Operate batch controller as directed in procedure steps **EXAMINER CUE:** **EXAMINER NOTE:** **COMMENTS:**	**Critical Step** SAT _____ UNSAT _____

STEP 11c: (step 1.3) Select "FEED SELECTOR SW." to BAST and pull handle up. **STANDARD:** Rotate switch to BAST and pull "UP" **EXAMINER CUE:** **EXAMINER NOTE:** **COMMENTS:**	**Critical Step** SAT _____ UNSAT _____

STEP 11d: (step 1.4) Open CAV-57 **STANDARD:** Rotate switch and observe the valve "OPENS" **EXAMINER CUE:** **EXAMINER NOTE:** **COMMENTS:**	**Critical Step** SAT _____ UNSAT _____

STEP 11e: (step 1.5) WHEN "FEED PERMIT" is lit, THEN open MUV-541 **STANDARD:** Rotate switch and observe the valve "OPENS" **EXAMINER CUE:** **EXAMINER NOTE:** **COMMENTS:**	**Critical Step** SAT _____ UNSAT _____

STEP 11f: (step 1.6) Prepare batch controller for boration. 1. Set MUV-108 to 100% in batch controller and depress "ENTER" 2. Depress lower "DISPLAY" 3. Depress "RATE" and verify "RATE GPM" is shown. **STANDARD:** Operate batch controller as directed in procedure steps **EXAMINER CUE:** **EXAMINER NOTE:** **COMMENTS:**	**Critical Step** SAT _____ UNSAT _____

STEP 11g: (step 1.7) **EXIT** this enclosure. Return to step 3.11. **STANDARD:** Return to Step 3.11 **EXAMINER CUE:** **EXAMINER NOTE:** **COMMENTS:**	SAT _____ UNSAT _____

STEP 12: (step 3.11) Ensure all available CAPs are running. CAP-1A CAP-1B **STANDARD:** Rotate pump start switches to start and observe both pumps start **EXAMINER CUE:** **EXAMINER NOTE:** **COMMENTS:**	**Critical Step** SAT _____ UNSAT _____

STEP 13: (step 3.12) Ensure post-filter bypass valve is open. Open MUV-100 **STANDARD:** Rotate switch and observe the valve "OPENS" **EXAMINER CUE:** **EXAMINER NOTE:** **COMMENTS:**	**Critical Step** SAT _____ UNSAT _____

STEP 14: (step 3.13) Determine boration flow rate. Determine flow rate using any of the following: MUT level (30.8 gal/in) Computer point X359 for MUT level (30.8 gal/in) Computer point X201 for A BAST level See OP-103F, Tank Volumes, Figure 7 Computer point X204 for B BAST level See OP-103F, Tank Volumes, Figure 7 Batch controller **STANDARD:** Verify batch controller flow is >10 gpm **EXAMINER CUE:** **EXAMINER NOTE:** **COMMENTS:**	SAT _____ UNSAT _____

STEP 15: (step 3.14) IF boration flow rate is > 10 gpm, THEN **GO TO** Step 3.17 in this procedure. **STANDARD:** Verify batch controller flow is >10 gpm **EXAMINER CUE:** **EXAMINER NOTE:** **COMMENTS:**	SAT _____ UNSAT _____

END OF TASK	

TIME STOP _____

CANDIDATE CUE SHEET

(TO BE RETURNED TO EXAMINER UPON COMPLETION OF TASK)

Initial Conditions:

The plant has experienced a dropped rod. After completion of SP-421, SDM is less than 1% delta K/K which places the plant in LCO 3.1.1

Initiating Cues:

Initiate boration to restore SDM within limits.

CRYSTAL RIVER UNIT 3
SIMULATOR JOB PERFORMANCE MEASURE

Task: Perform ECCS Suction Transfer

Alternate Path: N/A

JPM #: B1C (2K2) [BANK 00-05]

K/A Rating/Importance: 009EK3.21/4.2/4.5

Task Number/Position: 0050502005/RO

Task Standard: While aligning DHR the BWST decreases below 15 ft, perform ECCS Suction Transfer using EOP-14 Enclosure 19.

Preferred Evaluation Location: **Preferred Evaluation Method:**

Simulator x **In-Plant** ___ **Admin** ____ **Perform** x **Simulate** ____

References:
1. EOP-14 Enclosure 19, Rev. 8

Validation Time: **15** min. **Time Critical:** No

==========

Candidate: _____ **Time Start:** _____
Printed Name **Time Finish:** _____

Performance Rating: **SAT** _____ **UNSAT** _____ **Performance Time:** _____

Examiner: _____ _____ / _____
Printed Name **Signature** **Date**

Comment:

_____
_____
_____
_____

SIMULATOR OPERATOR SETUP INSTRUCTIONS:

1. BWST level is 20 feet
2. Acknowledge subcooling margin alarm.
3. Ensure MUT level is >95"
4. IC #??

SIMULATOR OPERATOR INSTRUCTIONS:

1. Booth operator will take the roles for the various operators

Tools/Equipment/Procedures Needed:

1. EOP-14, Enclosure 19

READ TO THE OPERATOR

Directions to the Student:

I will explain the initial conditions, and state the task to be performed. All steps, including any required communications, shall be performed for this JPM. I will provide initiating cues and reports on other actions when directed by you. Ensure you indicate to me when you understand your assigned task. To indicate that you have completed your assigned task, return the handout sheet to the examiner.

Initial Conditions:

You are the REACTOR OPERATOR.
A LOCA has occurred.
Cooldown is in progress using EOP-08
BWST level is 20 feet.

Initiating Cues:

You are requested to transfer suction for both ECCS trains in accordance with EOP-14, Enclosure 19.

START TIME: _____

STEP 1: Obtain a copy of appropriate procedure.	**Critical Step** SAT _____ UNSAT _____
STANDARD: Candidate obtains a copy of EOP-14 enclosure 19. **EXAMINER NOTE:** **When candidate demonstrates they can locate procedure then hand them Enclosure 19 of EOP-14.** **COMMENTS:**	

STEP 2: (step 19.1 of EOP-14 enclosure 19) **Critical Step**

PROCEDURE CAUTION: DHV-34 AND DHV-35 must be closed prior to BWST level < 7ft.

SAT _____

UNSAT _____

If 1 LPI pump is aligned for DHR, then go to step 19.17 in this enclosure.

STANDARD:
Candidate continues to step 19.2.

EXAMINER CUE:

EXAMINER NOTE:

COMMENTS:

STEP 3: (step 19.2)	Critical Step
Ensure at least 1 train of LPI is properly aligned. 1. BWST to DHP valves open: A Train: DHV-34 B Train: DHV-35 2. LPI pumps and required cooling water pumps operating: A Train: DCP-1A, RWP-3A, DHP-1A B Train: DCP-1B, RWP-3B, DHP-1B [Rule 5, EDG Control] 3. DHP isolation valves open: A Train: DHV-210 B Train: DHV-211 4. LPI injection valves open: A Train: DHV-5 B Train: DHV-6 **STANDARD:.** Candidate verifies DHV-34 and DHV-35 are open by red light ON and green light OFF for each valve. Candidate verifies DCP-1A, RWP-3A, DHP-1A, DCP-1B, RWP-3B, and DHP-1B are running by red light ON and green light OFF for each pump. Candidate verifies DHV-210 and DHV-211 are open by red light ON and green light OFF for each valve. Candidate verifies DHV-5 and DHV-6 are open by red light ON and green light OFF for each valve. **EXAMINER CUE:** **EXAMINER NOTE:** **COMMENTS:**	SAT _____ UNSAT _____

STEP 4: (step 19.3)	Critical Step
Adjust LPI control valve setpoint for RB sump operation. While observing for proper control, adjust LPI control valve setpoint to 2000 gpm: A Train: DHV-110 B Train: DHV-111 **STANDARD:** Candidate adjusts thumb wheels of DHV-110 and DHV-111 to 2000 gpm and verifies flow follows. **EXAMINER CUE:** **EXAMINER NOTE:** **COMMENTS:**	SAT _____ UNSAT _____

STEP 5: (step 19.4)	Critical Step
When BWST level is < 15 ft, then adjust BS for RB sump operation. Select 1200 gpm and LOCAL for BSP discharge valves: A Train: BSV-3 B Train: BSV-4 **STANDARD:** Candidate selects BSV-3 and BSV-4 control stations to REMOTE/LOCAL switch to LOCAL. **EXAMINER CUE:** **EXAMINER NOTE:** **COMMENTS:**	SAT _____ UNSAT _____

STEP 6: (step 19.5) Align LPI pump discharge to MUP suction. If DHP-1A is running, then open DHV-11 IF DHP-1B is running, the open DHV-12 **STANDARD:.** Candidate rotates control switches for DHV-11 and DHV-12 to open and verifies for each valve red light ON and green light OFF. **EXAMINER CUE:** **EXAMINER NOTE:** **COMMENTS:**	**Critical Step** SAT _____ UNSAT _____

STEP 7: (step 19.6)	Critical Step
PROCEDURE CAUTION: Aligning ECCS to RB sump may cause high radiation in AB. Align ECCS pump suction to RB sump. Open RB sump to DHP valves: A Train: DHV-42 B Train: DHV-43 **STANDARD:.** Candidate rotates control switches for DHV-42 and DHV-43 to open and verifies for each valve red light ON and green light OFF. **EXAMINER CUE:** **EXAMINER NOTE:** **COMMENTS:**	SAT _____ UNSAT _____

STEP 8: (step 19.7) Isolate BWST from LPI. Close BWST to DHP valves: A Train — DHV-34 B Train — DHV-35 **STANDARD:.** Candidate rotates control switches for DHV-34 and DHV-35 to close and verifies for each valve green light ON and red light OFF. **EXAMINER CUE:** **EXAMINER NOTE:** **COMMENTS:**	**Critical Step** SAT _____ UNSAT _____
END OF TASK	

TIME STOP _____

CANDIDATE CUE SHEET

(TO BE RETURNED TO EXAMINER UPON COMPLETION OF TASK)

Initial Conditions:

You are the REACTOR OPERATOR.
A LOCA has occurred.
Cooldown is in progress using EOP-08
BWST level is 20 feet.

Initiating Cues:

You are requested to transfer suction for both the ECCS trains in accordance with EOP-14, Enclosure 19.

CRYSTAL RIVER UNIT 3
SIMULATOR JOB PERFORMANCE MEASURE

Task: Comply with EOP rules & enclosures (EOP-13, EOP-14)

Alternate Path: YES

JPM #: B1d (2K2) [BANK #291]

K/A Rating/Importance: E14.EA1.3 / 3.6/3.8

Task Number/Position: 1150502012 / RO

Task Standard: Comply with EOP rules & enclosures (EOP-13, EOP-14); IAW Enclosure 7

Preferred Evaluation Location: **Preferred Evaluation Method:**

Simulator x **In-Plant** ___ **Admin** ____ **Perform** x **Simulate** ____

References:
1. EOP-14; Enclosure 7 Rev. 8

Validation Time: 15 min. **Time Critical:** No

==========

Candidate: _____ **Time Start:** _____
Printed Name **Time Finish:** _____

Performance Rating: **SAT** _____ **UNSAT** _____ **Performance Time:** _____

Examiner: _____ _____ / _____
Printed Name **Signature** **Date**

Comment:

_____
_____
_____
_____

SIMULATOR OPERATOR SETUP INSTRUCTIONS:

1. Red Tag EFP-3 is red tagged OOS for maintenance
2. EFP-2 Tripped on overspeed when it started
3. EFP-1 in PTL

This JPM is without EFP-2/3 pumps and a LOOP that requires feeding with AFW.

SIMULATOR OPERATOR INSTRUCTIONS:

1. IC#

The IC does all of the evolutions with the exception of red tagging EFP-3.

Tools/Equipment/Procedures Needed:

1. EOP-14; Enclosure 7

READ TO THE OPERATOR

Directions to the Student:

I will explain the initial conditions, and state the task to be performed. All steps, including any required communications, shall be performed for this JPM. I will provide initiating cues and reports on other actions when directed by you. Ensure you indicate to me when you understand your assigned task. To indicate that you have completed your assigned task, return the handout sheet to the examiner.

Initial Conditions:

A Loss of Offsite Power has occurred, EFP-3 is red tagged for air start system repair. The CRS is progressing through the EOP's for the plant conditions.

Initiating Cues:

You are the Reactor Operator and the CRS tells you to perform EOP-14; Enclosure 7.

START TIME: _____

STEP 1: Obtain a copy of appropriate procedure. **STANDARD:.** Candidate obtains a copy of EOP-14; Enclosure 7 Rev. 8 **EXAMINER NOTE:** **COMMENTS:**	SAT _____ UNSAT _____

STEP 2: (Step 7.1) Verify EFP-3 is running. IF EFP-3 is NOT running, THEN **GO TO** Step 7.5 in this enclosure. **STANDARD**: The operator identifies the red tag on EFP-3 and the pump start switch is in PTL. EFP-3 OOS alarm is actuated. **EXAMINER CUE:** **EXAMINER NOTE:** **COMMENTS:**	SAT _____ UNSAT _____

STEP 3: (step 7.5) Verify EFP-2 is running. IF EFP-2 is NOT running, THEN **GO TO** Step 7.7 in this enclosure. **STANDARD:.** The operator observes that EFP-2 is not available, no flow is indicated, and alarms for EFP-2 (Start Fail and Trip) are actuated. **EXAMINER CUE:** **EXAMINER NOTE:** **COMMENTS:**	SAT _____ UNSAT _____

STEP 4: (step 7.7) IF EDG A is supplying power to A ES 4160V Bus, THEN **GO TO** Step 7.13 in this enclosure. **STANDARD:.** Verify the "A" EDG carrying the "A" ES 4160 V bus, observe the 3209 breaker is closed and load is displayed on the Kw meter. **EXAMINER CUE:** **EXAMINER NOTE:** **COMMENTS:**	SAT _____ UNSAT _____

STEP 5: (step 7.13)	
Verify AFW is available. FWP-7 CDT-1 level > 9 ft IF AFW is NOT available, THEN **GO TO** Step 7.19 in this enclosure. **STANDARD:** FWP-7 is available, no tags or initial conditions to the contrary. Verify CDT level using MCB (CD-67-LI2) indications. **EXAMINER CUE:** **EXAMINER NOTE:** **COMMENTS:**	SAT _____ UNSAT _____

STEP 6: (step 7.14) Verify 4160 Volt Reactor Aux Bus 3 is energized. IF 4160 Volt Reactor Aux Bus 3 is NOT energized, THEN energize 4160 Volt Reactor Aux Bus 3 Open Bkr 3223 Select MTDG-1 to "RUN" Verify "MTDG-1 "READY" light (red) is lit. Close Bkr 3225 Verify 4160 Volt Reactor Aux Bus 3 voltage is stable. **STANDARD:.** The candidate should locate the Rx Aux Bus and verify that the Rx Aux Bus 3 is de-energized, by observing no voltage on the bus. **EXAMINER CUE:** **EXAMINER NOTE:** This now becomes an alternate path JPM; The alternate path steps are broken out on the next five sub steps (6a through 6e). **COMMENTS:**	SAT _____ UNSAT _____

STEP 6a: (Step 7.14) Continued Open Breaker 3223 **EXAMINER NOTE:** **STANDARD:** Locate Breaker 3223 control handle, rotate breaker 3223 control handle to the OPEN position, and observe breaker red light goes out and green light comes on **EXAMINER CUE:** **EXAMINER NOTE:** **COMMENTS:**	SAT _____ UNSAT _____

STEP 6b: (Step 7.14) Continued	**Critical Step**
Select MTDG-1 to "RUN".	SAT _____ UNSAT _____
STANDARD: Locate MTDG-1 control switch and rotate MTDG-1 control switch to "RUN" **EXAMINER CUE:** **EXAMINER NOTE:** **COMMENTS:**	

STEP 6c: (Step 7.14) Continued Verify "MTDG-1 "READY" light (red) is lit. **STANDARD:** Observe MTDG-1 "READY" light (red) comes on **EXAMINER CUE:** **EXAMINER NOTE:** **COMMENTS:**	SAT _____ UNSAT _____

STEP 6d: (Step 7.14) Continued Close Breaker 3225 **STANDARD:** Locate breaker 3225 control handle, rotate breaker 3225 control handle to the CLOSED position, and observe voltage on the bus. **EXAMINER CUE:** **EXAMINER NOTE:** **COMMENTS:**	**Critical Step** SAT _____ UNSAT _____

STEP 6e: (Step 7.14) Continued Verify 4160 Volt Reactor Aux Bus 3 voltage is stable. **STANDARD:** Observe stable voltage **EXAMINER CUE:** **EXAMINER NOTE:** **COMMENTS:**	SAT _____ UNSAT _____

STEP 7: (Step 7.15) IF EFP-2 is running, THEN ensure EFW control valves are closed. **STANDARD:** The operator observes that EFP-2 is not available, no flow is indicated, and alarms for EFP-2 show the pump is OOS. **EXAMINER CUE:** **EXAMINER NOTE:** **COMMENTS:**	SAT _____ UNSAT _____

STEP 8: (Step 7.16)	Critical Step
Establish AFW flow to each available OTSG. FWV-216 FWV-217 Start FWP-7 **STANDARD:** Verify that FWV-216 / 217 are closed, observe the valve controllers set to zero and the flow indication is zero. Locate FWP-7 control handle and rotate CW to start, verify current increase and the red running light ON. **EXAMINER CUE:** **EXAMINER NOTE:** **COMMENTS:**	SAT _____ UNSAT _____

STEP 8a: (Step 7.16) Continued	**Critical Step**
Establish EFW flow to each available OTSG. IF adequate SCM exists, AND OTSG level is ≤ 12½ in, THEN feed each available dry OTSG with continuous AFW flow within the following limits: Cooldown rate minimized See Table 2 Flow rate < 300 gpm to each dry OTSG **STANDARD:** Monitor RCS parameters using SPDS indications and/or Alpha pages of SPDS. Review table 2, and when flow is established feed at a rate of < 300 gpm. IF OTSG IS NOT DRY THIS IS N/A!!! **EXAMINER CUE:** **EXAMINER NOTE:** The OTSG may or may not be DRY depending on the simulator setup for this JPM. If this step is not appropriate then this step is NOT CRITICAL! **COMMENTS:**	SAT _____ UNSAT _____

STEP 8b: (Step 7.16) Continued	**Critical Step**
IF adequate SCM exists, AND OTSG level is > 12½ in, THEN ensure AFW flow is controlled. [Rule 3, EFW/AFW Control] **STANDARD:** Control FWV-216, and FWV-217 to feed OTSG(s) in a controlled manner, IAW rule 3. IF adequate SCM does NOT exist, THEN feed available OTSGs at inadequate SCM flow rate. [Rule 3, EFW/AFW Control] **STANDARD:** N/A, SCM exists for this JPM. **EXAMINER CUE:** **When flow is established with FWP-7 this JPM is complete.** **EXAMINER NOTE:** **COMMENTS:**	SAT _____ UNSAT _____

END OF TASK	

TIME STOP _____

CANDIDATE CUE SHEET

(TO BE RETURNED TO EXAMINER UPON COMPLETION OF TASK)

Initial Conditions:

A Loss of Offsite Power has occurred, EFP-3 is red tagged for air start system repair. The CRS is progressing through the EOP's for the plant conditions.

Initiating Cues:

You are the Reactor Operator and the CRS tells you to perform EOP-14; Enclosure 7.

CRYSTAL RIVER UNIT 3
SIMULATOR JOB PERFORMANCE MEASURE

Task: Ensure Building Spray (BS) actuation.

Alternate Path: BSP-1A will have a shaft shear when started.

JPM #: B1E (2K2) [BANK 00-04]

K/A Rating/Importance: 026A3.01/4.3/4.5

Task Number/Position: 0260502001/RO

Task Standard: Initiate Building Spray for high Reactor Building temperature using EM-225C.

Preferred Evaluation Location: **Preferred Evaluation Method:**

Simulator _x_ **In-Plant**___ **Admin** ____ **Perform** __x__ **Simulate** ____

References:

1. EM-225C, Rev 1

Validation Time: 7 min. **Time Critical:** No

==========

Candidate: _____ **Time Start:** _____
Printed Name **Time Finish:** _____

Performance Rating: **SAT** _____ **UNSAT** _____ **Performance Time:** _____

Examiner: _____ _____ / _____
Printed Name **Signature** **Date**

Comment:

_____
_____
_____
_____

SIMULATOR OPERATOR SETUP INSTRUCTIONS:

1. Description: A LOCA is in progress; Reactor Building pressure is < 30 psig; the BWST level is > 20 ft.
2. IC #??
3. Acknowledge SCM alarm.
4. Activate LP for B1d1 and trigger LP step #1.
5. Check CRTs to ensure RB temperatures (if displayed) are high

SIMULATOR OPERATOR INSTRUCTIONS:

1. Booth operator will take the roles for the various operators for notifications.

Tools/Equipment/Procedures Needed:

1. EM-225C

READ TO THE OPERATOR

Directions to the Student:

I will explain the initial conditions, and state the task to be performed. All steps, including any required communications, shall be performed for this JPM. I will provide initiating cues and reports on other actions when directed by you. Ensure you indicate to me when you understand your assigned task. To indicate that you have completed your assigned task, return the handout sheet to the examiner.

Initial Conditions:

You are the REACTOR OPERATOR.
A LOCA is in progress.
The CRS has entered EOP-03.
Reactor Building (RB) temperatures are high.
The Emergency Coordinator (EC) has given concurrence to start Building Spray to reduce RB temperatures.

Initiating Cues:

You are requested to start Building Spray (BSP-1A preferred) per section 4.6 of EM-225C.

START TIME: _____

STEP 1: Obtain a copy of appropriate procedure. **STANDARD:.** Candidate obtains a copy of EM-225C. **EXAMINER NOTE:** **When candidate demonstrates they can locate procedure then hand them EM-225C.** **COMMENTS:**	SAT _____ UNSAT _____

STEP 2: (step 4.6) If a building spray pump is required and EC concurrence has been obtained, then perform the following: **STANDARD**: Candidate performs the following steps. **EXAMINER CUE:** **EXAMINER NOTE:** **COMMENTS:**	SAT _____ UNSAT _____

STEP 3: (step 4.6.1) Ensure load is available on the emergency diesel generators per EOP-13, Rule 5. **STANDARD:.** N/A, the emergency diesel generators are not running. **EXAMINER CUE:** **EXAMINER NOTE:** **COMMENTS:**	SAT _____ UNSAT _____

STEP 4: (step 4.6.2) Ensure Building Spray flow controls are set at 1500 gpm and REMOTE if pumps are aligned to BWST, or 1200 gpm and LOCAL if aligned to the RB sump. **STANDARD:** Candidate verifies suction source to Building Spray pumps and ensures the REMOTE/LOCAL lever on BSV-3 and BSV-4 is set to REMOTE and the 1500 gpm. **EXAMINER CUE:** **EXAMINER NOTE:** **COMMENTS:**	**Critical Step** SAT _____ UNSAT _____

STEP 5: (step 4.6.3)	Critical Step
Notify the control room to start one building spray pump. **STANDARD:** Candidate rotates the control handle for BSP-1A to the start position and notes that the pump did not start (shaft shear, low amps, no flow, red light ON and green light OFF). Pump start failure is reported to Control Room Supervisor (CRS). Candidate repeats the guidance of EM-225C section 4.6 to start BSP-1B (some of the required steps may have been performed in parallel with BSP-1A alignment). **EXAMINER CUE:** **(If required) the TSC requests you start Building Spray.** **EXAMINER NOTE:** **Role-play as Control Room Supervisor (CRS) when candidate discovers problem with BSP-1A. Direct candidate to establish Building Spray with the "B" train. (Once BSP-1B is started the JPM is complete.)** **COMMENTS:**	SAT _____ UNSAT _____

END OF TASK	

TIME STOP _____

CANDIDATE CUE SHEET

(TO BE RETURNED TO EXAMINER UPON COMPLETION OF TASK)

Initial Conditions:

You are the REACTOR OPERATOR.
A LOCA is in progress.
The CRS has entered EOP-03.
Reactor Building (RB) temperatures are high.
The Emergency Coordinator (EC) has given concurrence to start Building Spray to reduce RB temperatures.

Initiating Cues:

You are requested to start Building Spray (BSP-1A preferred) per section 4.6 of EM-225C.

CRYSTAL RIVER UNIT 3
SIMULATOR JOB PERFORMANCE MEASURE

Task: Restore RPS channel power

Alternate Path: No

JPM #: B1F (2K2) [BANK #184]

K/A Rating/Importance: 012.A2.02 / 3.6 / 3.9

Task Number/Position: 0120102003/RO

Task Standard: Restore RPS channel "A" power

Preferred Evaluation Location: **Preferred Evaluation Method:**

Simulator _x_ **In-Plant**___ **Admin** ____ **Perform** __x__ **Simulate** ____

References:
1. OP-507 Rev. 22

Validation Time: 25 min. **Time Critical:** No

==========

Candidate: _____ **Time Start:** _____
Printed Name **Time Finish:** _____

Performance Rating: **SAT** _____ **UNSAT** _____ **Performance Time:** _____

Examiner: _____ _____ / _____
Printed Name **Signature** **Date**

Comment:

_____
_____
_____
_____

SIMULATOR OPERATOR SETUP INSTRUCTIONS:

1. Create IC with breaker closed and RCS pressure SASS selection to "B" RPS.
2.
3.
4.
5.

SIMULATOR OPERATOR INSTRUCTIONS:

Trigger pending step on pending page which opens VBDP-3 BKR 17. OPEN "A" RPS PS Breakers, System AC power; System DC power; PS-A1, and PS-A2. Insure RCS press SASS toggle switch selected to "B" RPS.

Tools/Equipment/Procedures Needed:

1. OP-507 Rev. 22
2.

READ TO THE OPERATOR

Directions to the Student:

I will explain the initial conditions, and state the task to be performed. All steps, including any required communications, shall be performed for this JPM. I will provide initiating cues and reports on other actions when directed by you. Ensure you indicate to me when you understand your assigned task. To indicate that you have completed your assigned task, return the handout sheet to the examiner.

Initial Conditions:

You are the REACTOR OPERATOR

The "A" RPS channel was de-energized using the breaker on the vital bus to allow repair of its power supply.

Initiating Cues:

The repairs have been completed. Restore RPS channel "A".

START TIME: _____

STEP 1:	
Obtain a copy of appropriate procedure. **STANDARD:** Candidate obtains a copy of OP-507 Rev. 22 **EXAMINER NOTE:** **COMMENTS:**	SAT _____ UNSAT _____

STEP 2: (step 4.7.1) ENSURE affected RPS Channel Power Supply breakers are OFF ENSURE the following power supply breakers are selected to OFF position "SYSTEM AC POWER" "SYSTEM DC POWER" "PS-(channel)1" + 15V Power Supply "PS-(channel)2" - 15V Power Supply Fan Breakers **STANDARD**: Locate all breakers inside the RPS cabinet and verify they are in the OFF position. **EXAMINER CUE:** **EXAMINER NOTE:** **COMMENTS:**	**Critical Step** SAT _____ UNSAT _____

STEP 3: (step 4.7.2)	**Critical Step**
ENSURE Power feed breaker for the affected channel is CLOSED ENSURE Feeder Breaker is CLOSED Channel "A" - VBDP-3 Bkr. #17 Channel "B" - VBDP-4 Bkr. #17 Channel "C" - VBDP-5 Bkr. #17 Channel "D" - VBDP-6 Bkr. #17 VERIFY "Power Available" lamp on "SYSTEM AC POWER" breaker is LIT **STANDARD:** Locate status lights on VBDP-3 verify breaker #17 is lit; verify power available light is lit on RPS cabinet **EXAMINER CUE:** **EXAMINER NOTE:** **Simulator operator will need to close this breaker when operator goes to check indication** **COMMENTS:**	SAT _____ UNSAT _____

STEP 4: (step 4.7.3) CLOSE affected RPS Channel "SYSTEM AC POWER" breaker VERIFY "Power On" lamp on "SYSTEM AC POWER" breaker is LIT **STANDARD:** Close the SYSTEM AC POWER breaker inside RPS cabinet **EXAMINER CUE:** **EXAMINER NOTE:** **COMMENTS:**	**Critical Step** SAT _____ UNSAT _____

STEP 5: (step 4.7..4) ENSURE RPS cabinet fans are operating TURN ON both Fan Breakers ENSURE fan lamps are LIT **STANDARD:** Verify fan breakers closed and fan lamps are lit **EXAMINER CUE:** **EXAMINER NOTE:** **COMMENTS:**	SAT _____ UNSAT _____

STEP 6: (step 4.7.5)	**Critical Step**
CLOSE affected RPS Channel ±15v power supply breakers CLOSE the following power supply breakers: "PS-(channel) 1" + 15V Power Supply "PS-(channel) 2" - 15V Power Supply **STANDARD:** Close the PS-1 and PS-2 breakers inside the RPS cabinet **EXAMINER CUE:** **EXAMINER NOTE:** **COMMENTS:**	SAT _____ UNSAT _____

STEP 7: (step 4.7.6)	**Critical Step**
REPOWER affected RPS Channel CLOSE "SYSTEM DC POWER" Breaker **STANDARD:** Close the SYSTEM DC POWER breaker inside the RPS cabinet **EXAMINER CUE:** **EXAMINER NOTE:** **COMMENTS:**	SAT _____ UNSAT _____

STEP 8: (step 4.7.7)	**Critical Step**
RESET affected RPS component power supplies DEPRESS RESET toggle switch for the following power supplies: Channel A NI-1 Detector Power Supply (will not energize >10%) NI-5 Detector Power Supply Contact Monitor P.S. **STANDARD:** Locate and operate the toggle switches for the power supplies, verify that they energize. **EXAMINER CUE:** **EXAMINER NOTE:** **COMMENTS:**	SAT _____ UNSAT _____

STEP 9: (step 4.7.8)	Critical Step
IF RPS A is being powered, THEN ENSURE RESET all tripped bistables listed in DETAILS: DEPRESS OUTPUT STATE RESET toggle switch VERIFY OUTPUT STATE lamp is dim DEPRESS OUTPUT MEMORY RESET toggle switch VERIFY OUTPUT MEMORY lamp is dim NI & P Cabinets #A1 and A2 SUR ROD WITHDRAWAL INHIBIT PWR/PUMP BISTABLE (will not reset with less than 3 RCPs running based on Contact Monitor) PWR/IMBAL/FLOW HIGH FLUX NI-5 FLUX >10% FP NI-5 (will not reset if greater than 10% FP) MFP TRIP BYPASS (will not reset if less than 20% FP) TURBINE TRIP BYPASS (will not reset if less than 45% FP) SHUTDOWN BYPASS (will not reset if greater than 1820 psig) HIGH PRESS. TRIP LOW RC PRESS (will not reset if less than 1900 psig) PRESS/TEMP HIGH RC TEMP **STANDARD:** For each bistable depress reset and memory toggle switches, verify indication lamps go dim **EXAMINER CUE:** **EXAMINER NOTE:** **COMMENTS:**	SAT _____ UNSAT _____

STEP 13: (step 4.7.12) RESET RB High Pressure Contact Buffer DEPRESS RESET toggle switch on REACTOR BUILDING HIGH PRESS RESET module **STANDARD:** Depress reset toggle, verify the indication lights go OFF **EXAMINER CUE:** **EXAMINER NOTE:** **COMMENTS:**	**Critical Step** SAT _____ UNSAT _____

STEP 14: (step 4.7.13)	**Critical Step**
RESET Turbine Trip Contact Buffer DEPRESS test toggle switch on TURBINE IN TRIP STATE module (lower switch on buffer module) **STANDARD:** Depress reset toggle, verify the indication lights go OFF **EXAMINER CUE:** **EXAMINER NOTE:** The Turbine Trip Contact Buffer will not reset if the turbine is tripped. **COMMENTS:**	SAT _____ UNSAT _____

STEP 15: (step 4.7.14)	**Critical Step**
RESET Reactor Trip Module DEPRESS SUBSYSTEM RESET toggle on REACTOR TRIP module VERIFY PROTECTIVE SUB-SYSTEM amber indicating lamps on the top of each channel cabinet are DIM for the respective channel being reset: "A" RPS Channel **STANDARD:** Locate and depress the reset toggle and verify the channel trip lights on the reactor trip module and the sub-system protective lights on the top of the RPS cabinet go dim **EXAMINER CUE:** **EXAMINER NOTE:** Trip Reset will remove the 125# Bias applied to the Turbine Bypass valves, if applicable. Local closure of CRD Breakers will be required unless all Control Rods are fully inserted. **COMMENTS:**	SAT _____ UNSAT _____

STEP 16: (step 4.7.15)	Critical Step
CLOSE associated CRD Breakers DEPRESS the TRIP RESET P/B DEPRESS the FAULT RESET P/B ENSURE CLOSED any open CRD Breakers A Breaker VERIFY CRD BREAKER OPEN and CRD CONTROL FAULT annunciator alarms are clear **STANDARD:** Call for I&C to close the breaker locally to clear the breaker trip alarms **EXAMINER CUE:** **EXAMINER NOTE:** **Unable to close the breakers from the control room with the reactor at power; must perform this evolution locally.** **COMMENTS:**	SAT _____ UNSAT _____

STEP 17: (step 4.7.16) VERIFY all associated alarms are clear Local breaker flags indicate CLOSED Annunciator window J-5-6 clear Event points 1982, 1983, 1984, 1985 are all clear CRD Control Fault (J-3-5) event point 1237 clear Breaker Trip indications in the RPS cabinet are dim (on the top of each cabinet and on the RTM) **STANDARD:** Verify the various alarm windows are not lit **EXAMINER CUE:** **EXAMINER NOTE:** **COMMENTS:**	SAT _____ UNSAT _____

STEP 18: (step 4.7.17) IF required to energize any EFIC channels, THEN REFER TO OP-450 Cabinet energized **STANDARD:** N/A for this JPM **EXAMINER CUE:** This will be addressed later **EXAMINER NOTE:** **COMMENTS:**	SAT _____ UNSAT _____

STEP 19: (step 4.7.18) RESET tripped EFIC DEPRESS both green flashing "TEST/RESULTS/RESET" buttons on EFIC panel ENSURE EFIC ACTUATION alarm is CLEAR **STANDARD:** N/A **EXAMINER CUE:** This will be addressed later **EXAMINER NOTE:** **COMMENTS:**	SAT _____ UNSAT _____

STEP 20: (step 4.7.19) RESET SASS Transfer and SASS Mismatch Alarms and Modules REFER TO OP-501, Reactor Non-Nuclear Instrumentation **STANDARD:** N/A to this JPM **EXAMINER CUE:** This will be addressed later **EXAMINER NOTE:** **COMMENTS:**	SAT _____ UNSAT _____

CANDIDATE CUE SHEET

(TO BE RETURNED TO EXAMINER UPON COMPLETION OF TASK)

Initial Conditions:

You are the REACTOR OPERATOR

The "A" RPS channel was de-energized using the breaker on the vital bus to allow repair of its power supply.

Initiating Cues:

The repairs have been completed. Restore RPS channel "A".

You may use any approved reference materials normally available, including logs. Make all written and/or oral reports as if the evolution was actually being performed.

During the course of the walkthrough examination, there may be some tasks you will be asked to perform that may require you to implement an alternative method directed by plant procedures in order to complete the assigned task. You are expected to make decisions and take actions based on the facility's procedural guidance and the indications available.

CRYSTAL RIVER UNIT 3
SIMULATOR JOB PERFORMANCE MEASURE

Task: Set radiation monitor warning and high alarm setpoints.
System: Rad Monitoring

Alternate Path: No

JPM #: B1G (2K2) [NEW]

K/A Rating/Importance: 073A4.03 3.7/3.7

Task Number/Position: 0720102001/RO

Task Standard: Reset alarm setpoints for liquid release

Preferred Evaluation Location: **Preferred Evaluation Method:**

Simulator x **In-Plant**___ **Admin** ____ **Perform** x **Simulate** ____

References:

1. OP-505 Rev 18

Validation Time: 7 min. **Time Critical**: No

==========

Candidate: _____ **Time Start:** _____
Printed Name **Time Finish:** _____

Performance Rating: **SAT** _____ **UNSAT** _____ **Performance Time:** _____

Examiner: _____ _____ / _____
Printed Name **Signature** **Date**

Comment:

_____
_____
_____
_____

SIMULATOR OPERATOR SETUP INSTRUCTIONS:

1. OP-505
2. Ensure Setpoints are reset prior to performing JPM
3.
4.
5.

SIMULATOR OPERATOR INSTRUCTIONS:

Tools/Equipment/Procedures Needed:

1. OP-505
2.

READ TO THE OPERATOR

Directions to the Student:

I will explain the initial conditions, and state the task to be performed. All steps, including any required communications, shall be performed for this JPM. I will provide initiating cues and reports on other actions when directed by you. Ensure you indicate to me when you understand your assigned task. To indicate that you have completed your assigned task, return the handout sheet to the examiner.

Initial Conditions:
The plant is lining up to perform a liquid release

Initiating Cues:
You are requested to change the setpoints on RML-2 as follows:
Warning should be set at 3.75 E 5
High alarm should be set at 4.25 E 6

START TIME: _____

STEP 1: Obtain a copy of appropriate procedure. **STANDARD:** Candidate obtains a copy of OP-505. **EXAMINER NOTE:** **COMMENTS:**	SAT _____ UNSAT _____

STEP 2: (step 4.4.2.1) **NOTE: The logic of the circuit does not allow HIGH alarm setpoint to be lower than the WARNING setpoint.** PULL OUT monitor to allow access to setpoint controls, if required **STANDARD:** N/A the setpoints for this monitor can be changed on the front panel **EXAMINER CUE:** **EXAMINER NOTE:** **COMMENTS:**	SAT _____ UNSAT _____

STEP 4: (step 4.4.2.2)	**Critical Step**
ADJUST Warning setpoint, as required SELECT the function switch to "1" DEPRESS "Enter" to display Warning setpoint DEPRESS "Digit" to select desired digit (flashing) DEPRESS "Value" to change selected digit as required DEPRESS "Enter" DEPRESS "Warning" and VERIFY proper setpoint **STANDARD:** Locate the indications and depress the pushbuttons as directed. When the "DIGIT" is selected it selects the specific number to change. Select "VALUE" and depress it as necessary to change the specific number to setpoint of 3.75 E 5. **EXAMINER CUE:** **EXAMINER NOTE:** **COMMENTS:**	SAT _____ UNSAT _____

STEP 5: (step 4.4.2.3)	**Critical Step**
ADJUST High setpoint, as required SELECT the function switch to "0" DEPRESS "Enter" to display High setpoint DEPRESS "Digit" to select desired digit (flashing) DEPRESS "Value" to change selected digit as required DEPRESS "Enter" DEPRESS "High" and VERIFY proper setpoint **STANDARD:** Locate the indications and depress the pushbuttons as directed. When the "DIGIT" is selected it selects the specific number to change. Select "VALUE" and depress it as necessary to change the specific number to setpoint of 4.25 E6. **EXAMINER CUE:** **EXAMINER NOTE:** **COMMENTS:**	SAT _____ UNSAT _____
END OF TASK	

TIME STOP _____

CANDIDATE CUE SHEET

(TO BE RETURNED TO EXAMINER UPON COMPLETION OF TASK)

Initial Conditions:

The plant is lining up to perform a liquid release

Initiating Cues:

You are requested to change the setpoints on RML-2 as follows:
Warning should be set at 3.75 E 5
High alarm should be set at 4.25 E 6

CRYSTAL RIVER UNIT 3
IN-PLANT JOB PERFORMANCE MEASURE

Task: Perform a normal S/U of the AC electrical distribution system

Alternate Path: N/A

JPM #: B2A (2K2) NEW

K/A Rating/Importance: 062.A4.07

Task Number/Position: 0620102001/ RO

Task Standard: Start up VBIT-1A and transfer the vital bus to the normal power supply

Preferred Evaluation Location: **Preferred Evaluation Method:**

Simulator ___ **In-Plant** x **Admin** ____ **Perform** ____ **Simulate** X

References:
1. OP-703 Rev. 66

Validation Time: 25 min. **Time Critical**: No

==========

Candidate: _____ **Time Start:** _____
Printed Name **Time Finish:** _____

Performance Rating: **SAT** _____ **UNSAT** _____ **Performance Time:** _____

Examiner: _____ _____ / _____
Printed Name **Signature** **Date**

Comment:

_____
_____
_____
_____

Tools/Equipment/Procedures Needed:

1. OP-703 Section 4.7

READ TO THE OPERATOR

Directions to the Student:

I will explain the initial conditions, and state the task to be performed. All steps, including any required communications, shall be simulated for this JPM. **Under no circumstances are you to operate any plant equipment**. I will provide initiating cues and reports on other actions when directed by you. Ensure you indicate to me when you understand your assigned task. To indicate that you have completed your assigned task, return the handout sheet to the examiner.

Initial Conditions:
VBIT-1A is de-energized, maintenance has been completed, the vital bus is aligned to the alternate power source.

Initiating Cues:

You are the Primary Plant Operator:

While operating at 100% full power, the Control Room Supervisor (CRS) directs you to STARTUP Inverter "1A" (VBIT-1A) and TRANSFER Vital bus "A" in accordance with OP-703, section 4.7.

START TIME: _____

STEP 1: Obtain a copy of appropriate procedure. **STANDARD:** Candidate obtains a copy of OP-703 Rev. 66 **EXAMINER NOTE:** **COMMENTS:**	SAT _____ UNSAT _____

STEP 2: (step 4.7.1) DETERMINE Plant effects of inadvertent de-energization of Vital Bus prior to Transfer AND REVIEW Enclosure 1, Static Switch Schematic to familiarize yourself with the static switch Vital Bus "A"; VBXS-1A VBXS-3A VBDP-3 VBDP-8 **STANDARD**: N/A **EXAMINER CUE:** This would be done in a pre-job brief and is complete. The enclosure is the last page of the procedure and you have that page for their review if they so desire. **EXAMINER NOTE:** Only one Vital Bus should be transferred at a time. All reset functions should be completed prior to transfer of subsequent Vital Bus power supplies. SP-321, Power Distribution Breaker Alignment and Power Availability Verification, should be performed within 24 hours (if possible) to verify the Vital Bus lineup after energizing a vital bus from its redundant transformer power supply. **EXAMINER NOTE:** **COMMENTS:**	SAT _____ UNSAT _____

STEP 3: (step 4.7.2) IF transferring Vital Bus "A", "C" or "D", THEN NOTIFY Security prior to transfer Security notified **STANDARD**: Call the control room to notify security **EXAMINER CUE:** Control room will notify security **EXAMINER NOTE:** **COMMENTS:**	SAT _____ UNSAT _____

STEP 4: (step 4.7.3.1)	**Critical Step**
IF A, Inverter startup is required,	SAT _____
THEN ENERGIZE Inverter per the following details	UNSAT _____

ENSURE "CT SHORTING SWITCH" toggle is in the "ON" position.

DEPRESS AND HOLD "precharge pushbutton until the "Precharged" Light is lit and the "BATTERY INPUT" circuit breaker is closed.

CLOSE "BATTERY INPUT" circuit breaker and release the "Precharge" pushbutton

CLOSE "AC INPUT" circuit breaker.

VERIFY the "IN SYNC" light is lit.

CLOSE "INVERTER OUTPUT" circuit breaker.

STANDARD:
Locate components and simulate indications as stated

EXAMINER CUE:
When the precharge pushbutton is depressed the white light will be LIT, must hold the precharge pushbutton until the Battery Input breaker is closed.

EXAMINER NOTE:
Inverter Startup and Shutdown procedures are posted on plaques on the inverters. Any changes to the following instructions requires there to be identical changes to the installed plaques.

VBTR-4A/4B/4C/4D inlet and outlet breakers are to remain closed at all times unless required open for maintenance.

COMMENTS:

STEP 5: (step 4.7.3.2) AFTER Inverter startup, NOTIFY Electric Shop to verify CVT core temperature Have Electric Shop verify the CVT core temp is ≥ 90°C by measuring ≥ 134.7 ohms at CVT core temperature test points "CVT Temp. (T801)" TC-4 J2-7 to J2-8 **STANDARD**: Notify control room to contact electric shop **EXAMINER CUE:** Electricians have checked temperatures and they are > 90°C. **EXAMINER NOTE:** **COMMENTS:**	SAT _____ UNSAT _____

STEP 6: (step 4.7.4) VERIFY Normal Inverter AC Output Voltage Approximately 120V **STANDARD**: Observe Inverter voltage at 120V **EXAMINER CUE:** **EXAMINER NOTE:** **COMMENTS:**	SAT _____ UNSAT _____

STEP 7: (step 4.7.5) **EXAMINER CUE:** WHEN transferring Vital Bus from Alternate Source to the INVERTER, THEN VERIFY following indications on respective VBXS-1A "Inverter Supplying Load" lamp is OFF "Alternate Source Supplying Load" lamp is OFF "In Sync" lamp is OFF "Inverter Available FU-204" lamp is ON "Auto Retransfer" switch is OFF "Manual Bypass" switch is in ALTERNATE SOURCE TO LOAD position **STANDARD:** Locate components and simulate indications as stated **EXAMINER CUE:** **EXAMINER NOTE:** VBTR-4A/4B/4C/4D inlet and outlet breakers are to remain closed at all times unless required open for maintenance. **COMMENTS:**	**Critical Step** SAT _____ UNSAT _____

STEP 8: (step 4.7.6) SELECT "Alternate Source AC Input" Circuit Breaker on VBXS-1A to the ON position **STANDARD**: Locate component and simulate indication to ON **EXAMINER CUE:** **EXAMINER NOTE:** **COMMENTS:**	**Critical Step** SAT _____ UNSAT _____

STEP 9: (step 4.7.7) VERIFY "Alternate Source Supplying Load" lamp and "In Sync" lamp on VBXS-1A are ON "Alternate Source Supplying Load" lamp ON "In Sync" lamp ON **STANDARD**: Locate component and simulate indication to ON **EXAMINER CUE:** **EXAMINER NOTE:** **COMMENTS:**	**Critical Step** SAT _____ UNSAT _____

STEP 10: (step 4.7.8) SELECT "Manual Bypass" switch on VBXS-1A to NORMAL OPERATION position **STANDARD**: Locate component and simulate indication to Normal Operation **EXAMINER CUE:** **EXAMINER NOTE:** **COMMENTS:**	**Critical Step** SAT _____ UNSAT _____

STEP 11: (step 4.7.9) DEPRESS "Inverter to Load" pushbutton for VBXS-1A **STANDARD**: Locate component and simulate depressing pushbutton **EXAMINER CUE:** **EXAMINER NOTE:** **COMMENTS:**	**Critical Step** SAT _____ UNSAT _____

STEP 12: (step 4.7.10)	**Critical Step**
VERIFY "Inverter Supplying Load" lamp comes ON and "Alternate Source Supplying Load" lamp goes OFF "Inverter Supplying Load" lamp ON "Alternate Source Supplying Load" lamp OFF **STANDARD**: Locate components and simulate indications "ON" and "OFF" **EXAMINER CUE:** **EXAMINER NOTE:** **COMMENTS:**	SAT _____ UNSAT _____

STEP 13: (step 4.7.11) SELECT "Auto Retransfer" switch on VBXS-1A to ON position **STANDARD**: Locate components and simulate indication "ON" **EXAMINER CUE:** **EXAMINER NOTE:** **COMMENTS:**	**Critical Step** SAT _____ UNSAT _____

STEP 14: (step 4.7.12) VERIFY Inverter VBIT-1A status meters are Stable **STANDARD**: Observe Inverter meters are stable **EXAMINER CUE:** **EXAMINER NOTE:** **COMMENTS:**	SAT _____ UNSAT _____

STEP 15: (step 4.7.13)	**Critical Step**
VERIFY following indications on respective VBXS-3A "Inverter Supplying Load" lamp is OFF "Alternate Source Supplying Load" lamp is OFF "In Sync" lamp is OFF "Inverter Available FU-204" lamp is ON "Auto Retransfer" switch is OFF "Alternate Source AC Input" Circuit Breaker is OFF "Manual Bypass" switch is in ALTERNATE SOURCE TO LOAD position **STANDARD**: Locate components and simulate indications "ON" and "OFF" **EXAMINER CUE:** **EXAMINER NOTE:** VBTR-4A/4B/4C/4D inlet and outlet breakers are to remain closed at all times unless required open for maintenance. **COMMENTS:**	SAT _____ UNSAT _____

STEP 16: (step 4.7.14) SELECT "Alternate Source AC Input" Circuit Breaker on VBXS-3A to the ON position **STANDARD**: Locate component and simulate indication to ON **EXAMINER CUE:** **EXAMINER NOTE:** **COMMENTS:**	**Critical Step** SAT _____ UNSAT _____

STEP 17: (step 4.7.15) VERIFY "Alternate Source Supplying Load" lamp and "In Sync" lamp on VBXS-3A are ON "Alternate Source Supplying Load" lamp ON "In Sync" lamp ON **STANDARD**: Locate components and simulate indications to "ON" **EXAMINER CUE:** **EXAMINER NOTE:** **COMMENTS:**	**Critical Step** SAT _____ UNSAT _____

STEP 18: (step 4.7.16) SELECT "Manual Bypass" switch on VBXS-3A to NORMAL OPERATION position **STANDARD**: Locate component and simulate indication to Normal Operation **EXAMINER CUE:** **EXAMINER NOTE:** **COMMENTS:**	**Critical Step** SAT _____ UNSAT _____

STEP 19: (step 4.7.17) DEPRESS "Inverter to Load" pushbutton for VBXS-3A Clears Control Room Inverter Bypass Alarm **STANDARD**: Locate component and simulate depressing pushbutton **EXAMINER CUE:** Control room acknowledges alarm clear **EXAMINER NOTE:** Notification is not critical **COMMENTS:**	**Critical Step** SAT _____ UNSAT _____

STEP 20: (step 4.7.18) VERIFY "Inverter Supplying Load" lamp comes ON and "Alternate Source Supplying Load" lamp goes OFF "Inverter Supplying Load" lamp ON "Alternate Source Supplying Load" lamp OFF **STANDARD**: Locate components and simulate indications "ON" and "OFF" **EXAMINER CUE:** **EXAMINER NOTE:** **COMMENTS:**	**Critical Step** SAT _____ UNSAT _____

STEP 21: (step 4.7.19) SELECT "Auto Retransfer" switch on VBXS-3A to ON position **STANDARD**: Locate components and simulate indication "ON" **EXAMINER CUE:** **EXAMINER NOTE:** **COMMENTS:**	**Critical Step** SAT _____ UNSAT _____

STEP 22: (step 4.7.20) VERIFY Inverter VBIT-1A status meters are Stable **STANDARD**: Observe Inverter meters are stable **EXAMINER CUE:** **EXAMINER NOTE:** **COMMENTS:**	SAT _____ UNSAT _____
END OF TASK	

TIME STOP _____

CANDIDATE CUE SHEET

(TO BE RETURNED TO EXAMINER UPON COMPLETION OF TASK)

Initial Conditions:

VBIT-1A is de-energized, maintenance has been completed, the vital bus is aligned to the alternate power source.

Initiating Cues:

You are the Primary Plant Operator.

While operating at 100% full power, the Control Room Supervisor (CRS) directs you to STARTUP Inverter "1A" (VBIT-1A) and TRANSFER Vital bus "A" in accordance with OP-703, section 4.7.

CRYSTAL RIVER UNIT 3
IN-PLANT JOB PERFORMANCE MEASURE

Task: Transfer excess contaminated secondary inventory to the "A" Fire Service Tank, FST-1

Alternate Path: No

JPM #: B2b (2K2) BANK #270

K/A Rating/Importance: 037AK3.07 4.2/4.4

Task Number/Position: 0860504001, 0560504005/SPO

Task Standard: Transfer excess contaminated secondary inventory to the "A" Fire Service Tank, FST-1

Preferred Evaluation Location: **Preferred Evaluation Method:**

Simulator ___ **In-Plant** _x_ **Admin** ____ **Perform** ____ **Simulate** _X_

References:
1. EOP-14, Enclosure 9, Rev 8

Validation Time: 20 min. **Time Critical:** No

==========

Candidate: _____ **Time Start:** _____
Printed Name **Time Finish:** _____

Performance Rating: **SAT** _____ **UNSAT** _____ **Performance Time:** _____

Examiner: _____ _____ / _____
Printed Name **Signature** **Date**

Comment:

_____
_____
_____
_____

Tools/Equipment/Procedures Needed:

1. EOP-14, Enclosure 9, Rev 8
2. A "P" key is required to gain entry to the Fire Pump House. CDV-103 lock should be on the SPO key ring

READ TO THE OPERATOR

Directions to the Student:

I will explain the initial conditions, and state the task to be performed. All steps, including any required communications, shall be simulated for this JPM. **Under no circumstances are you to operate any plant equipment**. I will provide initiating cues and reports on other actions when directed by you. Ensure you indicate to me when you understand your assigned task. To indicate that you have completed your assigned task, return the handout sheet to the examiner.

Initial Conditions:

In EOP-6 OTSGs steaming to the condenser, with at least 1 RCP operating. Additional secondary water inventory storage is desired.

Initiating Cues:

You are the Turbine Building Operator:

Perform EOP-14 enclosure 9, OTSG contaminated waste water management.

START TIME: _____

STEP 1: Obtain a copy of appropriate procedure. **STANDARD:** Candidate obtains a copy of EOP-14, Enclosure 9, Rev 8 **EXAMINER CUE:** **EXAMINER NOTE:** **COMMENTS:**	SAT _____ UNSAT _____

STEP 2: (step 9.1)	**Critical Step**
Align FSP recirc Hdr to FST-1B Ensure FSV-28 "FST-1B INLET ISO" is open (119 ft Berm between FSTs). Close FSV-27 "FST-1A INLET ISO" (119 ft Berm between FSTs). Open FSV-24 "FSP RECIRC LINE TO FST ISO" (119 ft FSPH northwest wall) **STANDARD:** Locate the identified valves and simulate operation to the appropriate position. **EXAMINER CUE:** FSV -- 28 is OPEN FSV – 27 is CLOSED FSV – 24 is OPEN **EXAMINER NOTE:** **COMMENTS:**	SAT _____ UNSAT _____

STEP 3: (step 9.2) Verify FSP-2B is available. IF FSP-2B is NOT available, THEN **GO TO** Step 9.9 in this enclosure. **STANDARD**: Go to Step 9.9 **EXAMINER CUE:** FSP-2B is NOT available **EXAMINER NOTE:** **Steps 9.3 through 9.8 are N/A; the next step is 9.9** **COMMENTS:**	**Critical Step** SAT _____ UNSAT _____

STEP 4: (step 9.9) Open FSV-41 "FSP SUCTION HDR CROSS-TIE" (119 ft FSPH north wall). **STANDARD:** Locate the identified valves and simulate operation to the appropriate position. **EXAMINER CUE:** FSV – 41 is OPEN **EXAMINER NOTE: STATUS** FSP-2B not available. FSP-1 available for alignment to FST-1B to support FS. FSP-2A available to transfer FST-1A to FST-1B. **COMMENTS:**	**Critical Step** SAT _____ UNSAT _____

STEP 5: (step 9.10) Close FSV-13 "FSP SUCTION HDR CROSS-TIE" (119 ft FSPH north wall). **STANDARD:** Locate the identified valves and simulate operation to the appropriate position. **EXAMINER CUE:** FSV – 13 is CLOSED **EXAMINER NOTE:** **COMMENTS:**	SAT _____ UNSAT _____

STEP 6: (step 9.11)	Critical Step*
Establish recirc flow to FST-1B Notify Control Room to start FSP-2A Verify FSP-2A is running (119 ft FSPH). *Throttle open FSV-23 "FSP-2A RECIRC ISO" (119 ft FSPH southeast wall) to establish 2100 gpm) as indicated on FS-12-FIS"FSP-1/1A/1B RECIRC FLOW". **STANDARD:** Call control room to start FSP-2A Observe FSP-2A is running *Locate valve and throttle to 2100 gpm **EXAMINER CUE:** Control room reports that FSP-2A is running Indicate that FSP-2A is running As operator throttles FSV-23 indicate flow increase to 2100 gpm on FS-12-FIS **EXAMINER NOTE:** FSP-1 or FSP-2B aligned to FST-1B to support FS FSP-2A available to transfer FST-1A to FST-1B **COMMENTS:**	SAT _____ UNSAT _____

STEP 7: (step 9.12) Notify Control Room that FST-1A transfer is in progress and request to be notified when FST-1A level is 6 ft. **STANDARD:** Call control room and ask for notification **EXAMINER CUE:** Notify operator that level is 6 ft. **EXAMINER NOTE:** **COMMENTS:**	SAT _____ UNSAT _____

STEP 8: (step 9.13) WHEN notified by Control Room that FST-1A level is 6 ft, THEN stop recirc flow. Close FSV-23 "FSP-2A RECIRC ISO" (119 ft FSPH southeast wall). Select FSP-2A "START MODE SELECTOR SWITCH" to "OFF" (119 ft FSPH). WHEN FSP-2A stops, THEN select FSP-2A "START MODE SELECTOR SWITCH" to "AUTO" (119 ft FSPH). Close FSV-24 "FSP RECIRC LINE TO FST ISO" (119 ft FSPH northwest wall). **STANDARD:** Locate the identified valves and switches and simulate operation to the appropriate position. **EXAMINER CUE:** FSV-23 is CLOSED Start Mode is OFF FSP-2A is stopped Start mode to AUTO FSV-24 is CLOSED **EXAMINER NOTE:** **COMMENTS:**	**Critical Step** SAT _____ UNSAT _____

STEP 9: (step 9.14)	**Critical Step***
Align FSP suctions to FST-1B Ensure the following pumps are stopped (119 ft FSPH): FSP-1 FSP-2A *Close FSV-3 "FST-1A OUTLET ISO" (119 ft Berm behind FST-1A). *Open FSV-41 "FSP SUCTION HDR CROSS-TIE" (119 ft FSPH north wall). *Ensure FSV-13 "FSP SUCTION HDR CROSS-TIE" is open (119 ft FSPH north wall). **STANDARD:** Locate the identified valves and simulate operation to the appropriate position. **EXAMINER CUE:** FSP-1 / 2A are stopped *FSV-3 is CLOSED *FSV-41 is OPEN *FSV-13 is OPEN **EXAMINER NOTE: STATUS** FST-1A level ≈ 6 ft FST transfer complete **COMMENTS:**	SAT _____ UNSAT _____

STEP 10: (step 9.15) Notify Control Room of FST-1A status. FST-1A is pumped down and isolated. FST-1A and CDT-1 are to be cross-tied **STANDARD:** Notify control room of FST-1A status **EXAMINER CUE:** Respond as control room that FST-1A is pumped down and that it will be cross-tied to CDT-1 **EXAMINER NOTE:** **COMMENTS:**	SAT _____ UNSAT _____

STEP 11: (step 9.16)	Critical Step
Cross-tie FST-1A to CDT-1 Close CDV-288 "FST TO CDT-1 CROSS-TIE DRAIN" (119 ft Berm by FST-1A). Open CDV-289 "FST TO CDT-1 CROSS-TIE ISO" (119 ft Berm by FST-1A). Open FSV-918 "FST TO CDT-1 CROSS-TIE ISO" (119 ft Berm by FST-1A) Open CDV-103 "CDT-1 TO EFP SUCTION" (119 ft Berm by CDT-1). **STANDARD:** Locate the identified valves and simulate operation to the appropriate position. **EXAMINER CUE:** CDV-288 is CLOSED CDV-289 is OPEN FSV-918 is OPEN CDV-103 is OPEN **EXAMINER NOTE:** **COMMENTS:**	SAT _____ UNSAT _____

STEP 12: (step 9.17) Notify TSC to monitor FST-1A and CDT-1 level. **STANDARD:** N/A the control room would perform this step **EXAMINER CUE:** **EXAMINER NOTE:** **COMMENTS:**	SAT _____ UNSAT _____

STEP 13: (step 9.18) Exit this Enclosure **STANDARD:** **EXAMINER CUE:** **EXAMINER NOTE:** **COMMENTS:**	SAT _____ UNSAT _____
END OF TASK	

TIME STOP _____

CANDIDATE CUE SHEET

(TO BE RETURNED TO EXAMINER UPON COMPLETION OF TASK)

Initial Conditions:

In EOP-6 OTSGs steaming to the condenser, with at least 1 RCP operating. Additional secondary water inventory storage is desired.

Initiating Cues:

You are the Turbine Building Operator:

Perform EOP-14 enclosure 9, OTSG contaminated waste water management.

CRYSTAL RIVER UNIT 3
IN-PLANT JOB PERFORMANCE MEASURE

Task: Release waste gas decay tank to plant ventilation.

Alternate Path: When the release is started WD-19-FQI fails high.

JPM #: B2c (2K2) REPEAT

K/A Rating/Importance: G2.3.11/2.7/3.2

Task Number/Position: 0710103004/PPO

Task Standard: Release waste gas decay tank to plant ventilation using OP-412B.

Preferred Evaluation Location: **Preferred Evaluation Method:**

Simulator ___ **In-Plant** x **Admin** ____ **Perform** ____ **Simulate** X

References:
1. OP-412B Rev. 19

Validation Time: 15 min. **Time Critical**: No

==========

Candidate: _____ **Time Start:** _____
Printed Name **Time Finish:** _____

Performance Rating: **SAT** _____ **UNSAT** _____ **Performance Time:** _____

Examiner: _____ _____ / _____
Printed Name **Signature** **Date**

Comment:

_____
_____
_____
_____

Tools/Equipment/Procedures Needed:

1. OP-412B completed up to step 4.1.32
2. Waste Gas Release Permit
3. Key to WDV-478
4. Calculator

READ TO THE OPERATOR

Directions to the Student:

I will explain the initial conditions, and state the task to be performed. All steps, including any required communications, shall be simulated for this JPM. **Under no circumstances are you to operate any plant equipment**. I will provide initiating cues and reports on other actions when directed by you. Ensure you indicate to me when you understand your assigned task. To indicate that you have completed your assigned task, return the handout sheet to the examiner.

Initial Conditions:

You are the PRIMARY PLANT OPERATOR.

The previous shift has started the process of releasing the "C" Waste Gas Decay Tank to plant ventilation.

Initiating Cues:

You are requested to continue with the release of the "C" Waste Gas Decay Tank, starting with step 4.1.32 of OP-412B.

START TIME: _____

STEP 1: Obtain a copy appropriate procedure. **STANDARD:** Candidate obtains a copy of OP-412B. **EXAMINER NOTE:** **When the candidate has completed reading the cue provide them with the GRWRP and a partially completed OP-412B.** **COMMENTS:**	SAT _____ UNSAT _____

STEP 2: (step 4.1.32) PERFORM Valve Alignment for WGDT "C" Discharge CLOSE the following: WDV-392, WGDT WDT 1C Inlet Isol WDV-435, WGDT WDT 1C Drain Isol WDV-395, WGDT WDT 1C Outlet Isol to Recycle OPEN the following: WDV-439, Waste Gas Discharge CV WDV-438, WGDT WDT 1C Outlet Release WDV-477, Outlet Isolation to RM-11A **STANDARD:** Candidate verifies green light ON and red light OFF for WDV-392. Candidate verifies green light ON and red light OFF for WDV-395. Candidate rotates control switch for WDV-439 open and verifies red light ON and green light OFF. Candidate rotates control switch for WDV-438 open and verifies red light ON and green light OFF. Candidate rotates hand wheel for WDV-477 counter-clockwise until hard stop. **EXAMINER CUE:** **WDV-435 was closed earlier by an operator in the valve alley. WDV-392 and WDV-395 green lights are ON and red lights are OFF. WDV-439 and WDV-438 red lights are ON and green lights are OFF. WDV-477 hand wheel rotates and comes to a hard stop.** **EXAMINER NOTE:** **COMMENTS:**	**Critical Step** SAT _____ UNSAT _____

STEP 3: (step 4.1.33)	**Critical Step**
COMPLETE Valve Alignment for WGDT Release	SAT _____
CLOSE WDV-566, Nitrogen Gas Sampler Purge Isolation	UNSAT _____
CLOSE WDV-549, Nitrogen Gas Sampler Purge Isolation	
OPEN WDV-565, Inlet to RM-A11 Isolation	
STANDARD: Candidate rotates manual valve operator of WDV-566 in clockwise direction until hard stop. Candidate rotates hand wheel of WDV-549 in clockwise direction until hard stop. Candidate rotates manual valve operator of WDV-565 in counter-clockwise direction until hard stop.	
EXAMINER CUE: **WDV-566 hand wheel rotates and comes to a hard stop. WDV-549 hand wheel rotates and comes to a hard stop. WDV-565 hand wheel rotates and comes to a hard stop.**	
EXAMINER NOTE:	
COMMENTS:	

STEP 4: (step 4.1.34) If RM-A11 is inoperable, then complete enclosure 2, Independent Verification of Discharge Valves Lineup. Perform independent verification of discharge lineup. Annotate completion of two independent verifications of the discharge lineup on the GRWRP. **STANDARD**: N/A **EXAMINER CUE:** **RM-A11 is operable.** **EXAMINER NOTE:** **COMMENTS:**	SAT _____ UNSAT _____

STEP 5: (step 4.1.35) Notify Security of Waste Gas Release. Verify roof patrols have been secured. **STANDARD**: N/A **EXAMINER CUE:** **This has been completed by the Control Room.** **EXAMINER NOTE:** **COMMENTS:**	SAT _____ UNSAT _____

STEP 6: (step 4.1.36) Ensure Channel Check on WD-19-FQI is completed. WD-19-FQI Channel Check Complete Step 4.1.15 has been completed SAT OR PT-168B, Section 4.1 has been completed SAT Annotate completion of WD-19-FR Channel Check on the GRWRP OR WD-19-FQI is inoperable and to step 4.1.39 **STANDARD**: Candidate observes step 4.1.15 has been checked and checks the first part of detail 1. Candidate signs and dates GRWRP in appropriate section. **EXAMINER CUE:** **EXAMINER NOTE:** **COMMENTS:**	SAT _____ UNSAT _____

STEP 7: (step 4.1.37) PROCEDURE CAUTION: Do not pressurize GM tube in RM-A11 above 8 psig. Start WGDT release to ventilation filter units. Unlock and throttle WDV-478 adjusting flow to the most conservative of the following: Flow less than 10 scfm on WD-19-FQI. OR Flow less than limits established on GRWRP. **STANDARD**: Candidate unlocks WDV-478 and rotates hand wheel counter-clockwise to a throttled position. **EXAMINER CUE:** **WDV-478 is in a throttled position** **EXAMINER NOTE:** **COMMENTS:**	**Critical Step** SAT _____ UNSAT _____

STEP 8: (step 4.1.38) Determine if WD-19-FQI is operating properly. If flow rate appears accurate, then go to step 4.1.40 OR If no flow rate is indicated or appears inaccurate, then close WDV-478 and notify the NSS/NSM **EXAMINER CUE:** **WD-19-FQI reads 999.99** **STANDARD:** Candidate rotates WDV-478 hand wheel clockwise until hard stop reached. Candidate notifies NSS/NSM of inaccuracy of WD-19-FQI **EXAMINER CUE:** **WDV-478 is closed. The JPM is complete.** **COMMENTS:**	**Critical Step** SAT _____ UNSAT _____
END OF TASK	

TIME STOP _____

CANDIDATE CUE SHEET

(TO BE RETURNED TO EXAMINER UPON COMPLETION OF TASK)

Initial Conditions:

You are the PRIMARY PLANT OPERATOR:

The previous shift has started the process of releasing the "C" Waste Gas Decay Tank to plant ventilation

Initiating Cues:

You are requested to continue with the release of the "C" Waste Gas Decay Tank, starting with step 4.1.32 of OP-412B