P21 93403

Record Type A1.105C

Nuclear Engineering Memorandum
Duquesne Light Company

EM NO. 106684	Unit No. 2	System No. Various	TMD / DCP / SMR / TER/ EM No. N/A
Date Prepared 10/19/93	MWR No. N/A	Commitment ☐Y ■N	Date / / No.
Target Due Date 11/8/93	EM classification 06	Comp. Code VALVOP	Mark No. Various
Subject To (Dept. Code): B		Outage Related 4 R	Response Required ■ Y ☐ N

E.M. Title: Inspection Criteria for Henry Pratt Butterfly Valves

Subject: Henry Pratt was contacted concerning problems on 2RSS-MOV 155A,B,C,D. Pratt stated that by design the adapter plate & bonnet piece are to retain the spline adapter. This is accomplished by limiting the through-hole size dia to a value that would not allow the spline adapter to move out of position. Henry Pratt provided the adapter plate & bonnet through-hole dia for valves sold to BV Unit 2. NED requests that

References:	Orig. Dept.	Cost Center	Prepared By:	Emp/SS No.	Extension:	Mail Drop
H. Pratt fax dated 10/18/93	Q	641	Neil A. Morrison	1358	5913	SEB-3
			Approved By: [signature]	Emp. No. 5993	Date: 10/19/93	

FOR INFORMATION ONLY

Subject Recd. Date	Assigned Section:	Assigned To: Emp. No.	Response To (Dept. Code):

Eng. Classification | Response:

Resident Inspectors:
Larry Rosbach - Senior
Pete Senna
Scott Greenly

MWR No.	Resources used: ☐ Internal ☐ External	Manhours used by Responder

References:	Eng. Change Notice	Station Mod. Req.	Technical Eval. Report	Answered By:	Ext.	Emp/SS No.
	Required? ☐Y ☐N	SMR? ☐Y ☐N	TER? ☐Y ☐N	Approved By:	Date:	Emp. No.
	ECN No.	SMR No.	TER No.			

DISTRIBUTION

S R		S R		S R		Mail Drop
X X	Originator	X	Director System Engineering	■	Scot Greenlee	BV-TLD
X	Nuclear Safety		Nuclear Construction		Cliff Custer	SOSB-G
X	Operations Procedures	X X	Planning & Scheduling		Ed Coholich	BV-A
X	Operations Engineer	X X	Technical Services Mgr.		Steve Havanec	BV-PI
					Emma Unopak	BV-QC

the above mentioned hole diameters be checked against the information provided below (± 1/32). This check will identify any additional H. Pratt valves that may experience a sliding spline addapter.

Mark No.	Adapter/Bonnet hole size
2CCP-MOV 128A,B	1 1/2 inches
2CCP-MOV 150-1, 151-1, 156-1, 157-1	2 5/8
2CCP-MOV 150-2, 151-2, 156-2, 157-2	2 5/8
2CCP-MOV 173	1 1/2
2CCP-MOV 175-1,2, 176-1,2, 177-1,2, 178-1,2	1 1/2
2HVC-MOD 204A,B	1 1/2
2HVP-MOD 301	1 1/2
2RSS-MOV 155A,B,C,D	2 5/8
2SWE-MOV 116A,B	5 1/16

GEE Note

4 valves with problem.
Pratt Valves with HBC Limitorque Operator.

E.M. #

Mark No.	Adapter plate / Bonnet hole size
2 SWS-MOV 102 A, B, C1, C2	5 1/16
2 SWS-MOV 103 A, B	3 1/8
2 SWS-MOV 106 A, B	5 1/16
2 SWS-MOV 120 A, B	2 5/8
2 SWS-MOV 152-1, 153-1, 154-1, 155-1	1 1/2
2 SWS-MOV 152-2, 153-2, 154-2, 155-2	1 1/2
2 SWS-MOV 160, 161, 162, 163, 164, 165, 166, 167	1 1/2

Forward the adapter plate and bonnet hole dimensions to NED. (Both plates should have the same size hole but its important to accurately measure each. If the adapter plate dia is larger than the bonnet it would retain the spline adapter but may provide insufficient spline engagement)

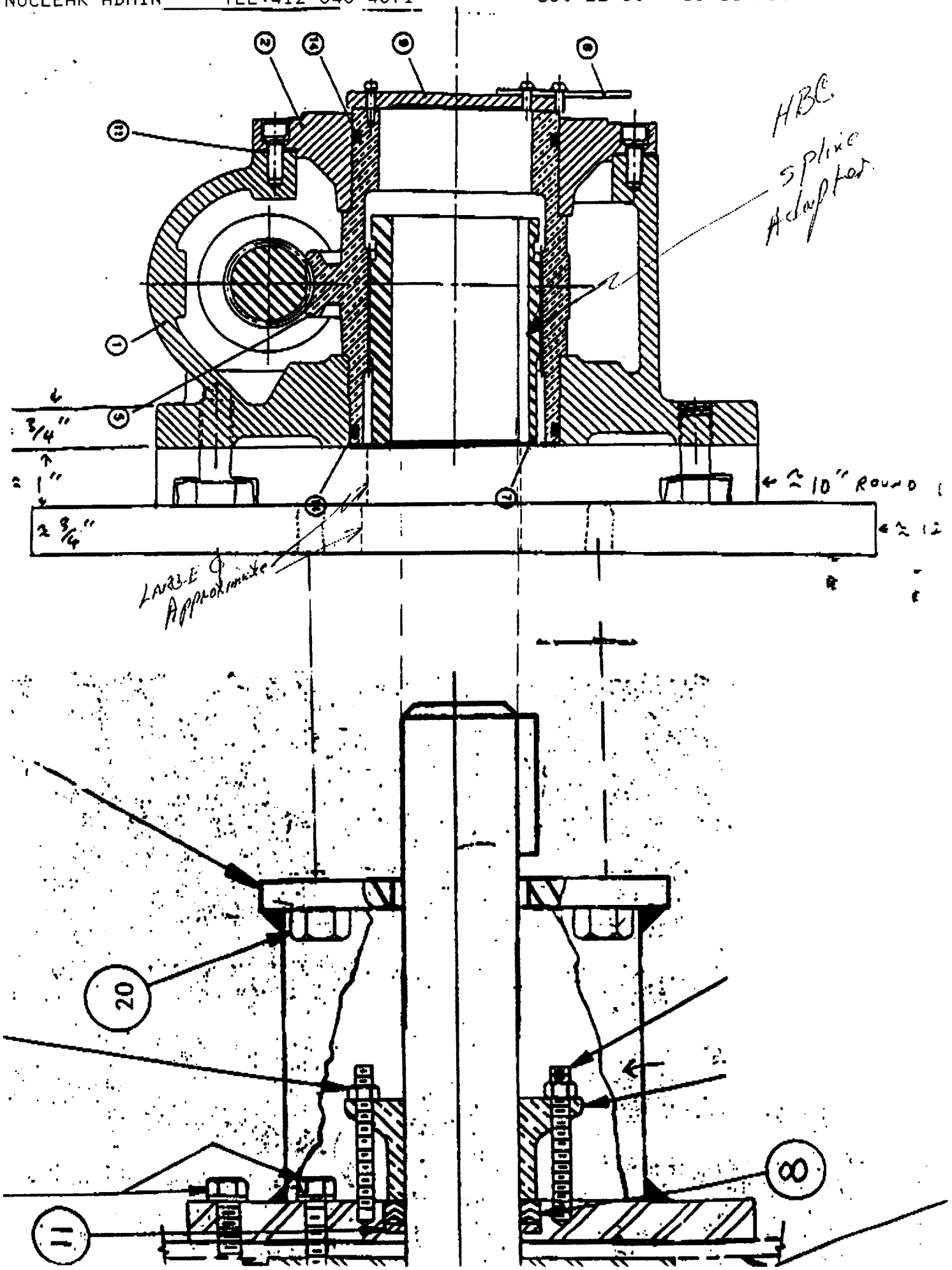
HBC
Spline
Adapter
3/4"
≈ 1"
≈ 3/4"
≈ 10" ROUND
LARGE Approximate
20
8
11

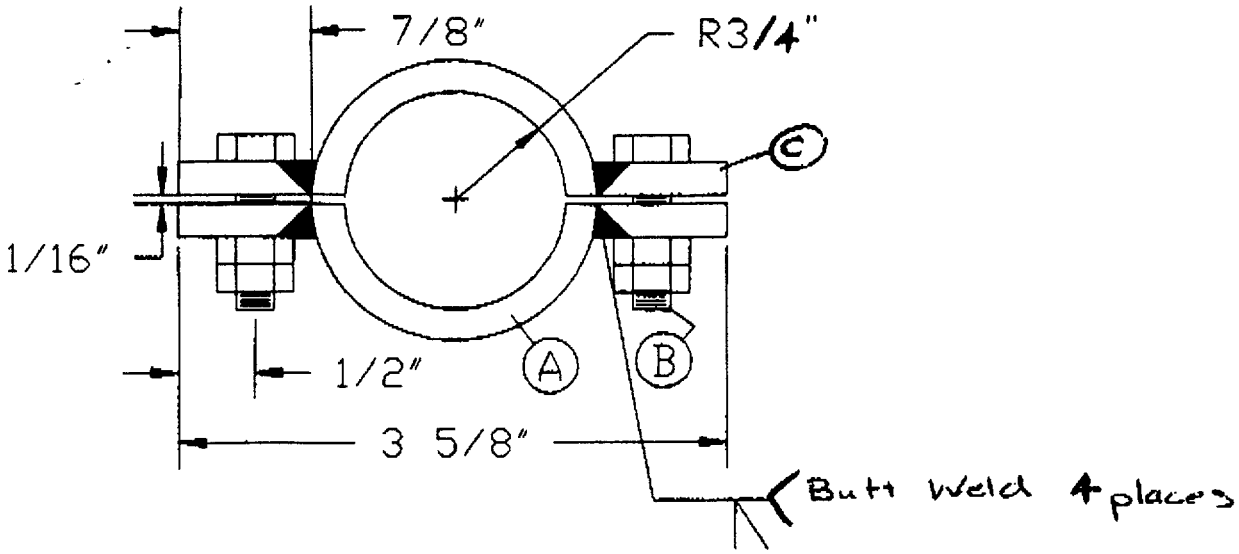
7/8"
R3/4"
C
1/16"
1/2"
A
B
3 5/8"
Butt Weld 4 places

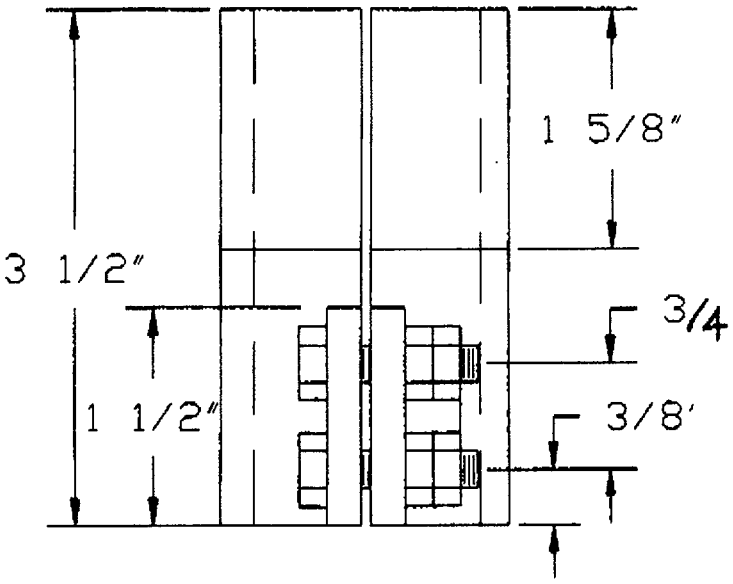
1 5/8"
3 1/2"
3/4
1 1/2"
3/8'