TIPCK02

To : DOCUMENT CONTROL DESK
Facility : MP Department : 806
Address : NUC REGULATORY COMMISSION (0140)
DOCUMENT CONTROL DESK
WASHINGTON, DC 20555

From : NDS CONT DOCUMENTS
Date/Time : 01/29/02 07:41

Trans No. : 000025780 Transmittal Group Id: 02029KA-2
Total Items: 00003

PASSPORT DOCUMENT

TRANSMITTAL

Page: 1

	Item	Facility	Type	Sub	Document Number / Title	Sheet	Revision	Doc Date	Copy #	Media	Copies
*	0001	MP	PROC	CH	CP 3804K PASS RCS RSS SAMPLE		002 02			P	01
*	0002	MP	PROC	CH	CP 3804L PASS CONTAINMENT AIR SAMPLE		002 01			P	01
*	0003	MP	PROC	CH	CP 3804M PASS VENTILATION SAMPLE		001 02			P	01

Marked (*) documents require your acknowledgement.

Acknowledgement Date : _____ Signature: _____

Please check the appropriate response and return form to sender.

_____ All documents received.
_____ Documents noted above not received (identify those not received).
_____ I no longer require distribution of these documents.

Date: _____ Signature: _____

A001

08/22/01
Approval Date

08/23/01
Effective Date

Document Action Request

SPG # N/A

A

Initiated By: Nileen Drzewianowski Date: 01/24/2002 Department SPG Ext 5139

Document No: CP 3804K Rev. No: ~~B~~ 002 Minor Rev No. 02

Title: **PASS RCS/RSS Sample**

B

Reason for Request (attach commitments,CR's,AR's,etc)

Editorial Correction AR# 01005693-01 Added NRC Commitment reference and AR# 99005798-06

Continued ☒

Select One See MP-05-DC-SAP01 sect 2.3 to determine type of change

C

☐ Intent Change (SQR Independent, RCD, ENV Screen Required (Other reviews may be required. See MP-05-DC-FAP 01.1 Att 3 ☑ Edit Corr ☐ Non-Intent Change (Only SQR Independent Review and Env. screen Required)

D

Editorial Correction Approval

L. Mott 1/28/02
Plant Mngt Staff Member - Approval / Date

TPC Interim Approval

/
(1) Plant Mngt Staff Member Print/Sign/Date

/
(2) SM/SRO/CFH on Unit Print/Sign/Date

E

Procedure Request/Feedback Disposition

Priority: ☑ Perform Now ☐ Perform Later - See Comments

Activity: ☐ Revision ☑ Minor Revision (See DC-GDL01 for guidance) ☐ Cleanup Rev ☐ Biennial Review ☐ Cancellation ☐ Supercedure

☐ TPC ☐ OTC ☐ Place in Void

F

Reviews continued ☐	Print	Sign	Date	SQR Qualified Yes	SQR Qualified No	SQR Qualified Dept.	✓ If Comments
☐				☐	☐		☐
☐				☐	☐		☐
☐				☐	☐		☐
☐				☐	☐		☐
☐				☐	☐		☐
Licensing Basis ☐	N/A	N/A	N/A	☐	☐	N/A	☐
Independent ☐	N/A	N/A	N/A	☐	☐	N/A	☐

G

An NRRL update was required ? ☐ Yes

H

1. ☒ **SQR Program Final Review and Appproval**

Approval ☐ Disapproval ☐

N/A /
SQR Qualified Independent Reviewer / Date

N/A
Department Head/Responsible Individual

N/A
Approval Date

2. ☐ **SORC** ☒ **RI/DH Final Review and Approval**

N/A
Department Head/Responsible Individual Sign

Meeting No. N/A

N/A
SORC Approval Signature

N/A
Approval Date

I

Effective Date 01/30/02

MILLSTONE NUCLEAR POWER STATION
CHEMISTRY PROCEDURE

STOP THINK ACT REVIEW

PASS RCS/RSS Sample
[✣Ref. 6.55]

CP 3804K

Rev. 002–02

NOTE

A review by the Emergency Planning Department is required whenever this procedure is revised or whenever changes are made to this procedure which impact the ability to collect and analyze a PASS sample.

A review by the Nuclear Fuels Safety Analysis is required whenever modifications to this procedure may impact dose limit time and motion study calculations. ②

Approval: 01/28/02

Effective Date: 01/30/02

Level of Use
Continuous

SME: Frank Mueller

PASS RCS/RSS Sample

TABLE OF CONTENTS

ATTACHMENTS AND FORMS

1. PURPOSE

1.1 Objective

Provide instructions for operation of the Unit 3 reactor coolant post accident sampling system for RCS/RSS sample acquisition during Station Emergency Response Organization (SERO) activation when high radioactivity levels, due to an accident, may preclude the normal (conventional) sampling method.

This procedure satisfies requirements listed in Unit 3 Technical Specification 6.8.4 d.

1.2 Discussion

The time required to collect and analyze samples should be 3 hours or less from the time the ADTS makes the decision to obtain a sample using PASS, except for chloride, which is 24 hours. Gross activity is the sum of liquid and gaseous isotopic activity.

A potential exists for a reactor coolant to service water leak in the PASS sample cooler during sampling. This requires 3SWP*RE60A to be in operation to allow Operations to detect the leak. If a leak is detected, 3SSP–V41, sample cooler SCL3 inlet isolation valve, 3SWP*V839, PA sample cooler SCL3 service water inlet, and 3SWP*V842, PA sample cooler SCL3 service water outlet, are closed to isolate the leak.

If conditions arise that will not allow Sections 4.1 through 4.12 to be completed, the procedure user will be directed to Section 4.20, "Restoration from PASS Sample Acquisition," to return the system to normal.

Attachment 7 contains a simplified drawing of the reactor coolant post accident sampling system.

1.3 Applicability

This procedure is applicable during SERO activation when in–plant radioactivity levels are too high to permit reactor coolant sampling via the normal (conventional) method.

For RCS sample, when RCS pressure is greater than 255 psia.

For RSS sample, when RSS is in operation (restricted to MODE 4, 5, 6 and 0 during non–accident conditions). ①

1.4 **Frequency**

Performance of this procedure may be repeated periodically during SERO activation.

2. PREREQUISITES

2.1 General

__/__ 2.1.1 DAS/RCS system engineer has been notified that PASS effluent will be added to the containment drains sump and a determination should be performed of volume added to sump and made available to Operations (MODE 1–4 during non–accident conditions only). ①

__/__ 2.1.2 Operations has removed caution tag from 3SWP*V839, PA sample cooler SCL3 service water inlet

__/__ 2.1.3 SERO is activated.

__/__ 2.1.4 3SWP*RE60A, service water radiation monitor, is in operation.

__/__ 2.1.5 MCRO has been notified of the following:

- PASS sample will be taken
- Chemistry must be notified if activity alarm is received from 3SWP*RE60A during PASS sample
- Chemistry must be notified if 3SWP*RE60A is removed from service during PASS sample

__/__ 2.1.6 Key has been obtained from the MCRO to unlock the following:

- 3SSP*V13, PASS supply isolation ctmt penetration (RCS sample only)
- 3SSP*V14, PASS return isolation ctmt penetration
- 3SWP*V839, liquid sample cooler service water inlet
- 3SWP*V842, liquid sample cooler service water outlet
- 3SSP–V124, recirc pump flow throttle valve (RSS sample only)

___/___	2.1.7	Health Physics has been notified that a liquid PASS sample will be taken.
___/___	2.1.8	Health Physics has evaluated need for RWP.
___/___	2.1.9	Lab ventilation is operating.
	2.1.10	Lead brick shielding has been placed at the following locations:
___/___		• IC
___/___		• ICP
___/___		• Lab ventilation hood
___/___	2.1.11	Oxygen analyzer and sensor have been calibrated.
___/___	2.1.12	Computer radioisotopic analysis system in operation and calibrated.
___/___	2.1.13	Ion chromatograph has been set up for PASS sample analysis and calibrated or calibration initiated.
___/___	2.1.14	ICP has been set up for PASS sample boron analysis and calibrated or calibration initiated.
___/___	2.1.15	Gas chromatograph has been set up for PASS sample analysis and calibrated or calibration initiated.
___/___	2.1.16	Proper operation of sample syringes in PASS suitcase has been verified.
___/___	2.1.17	14.4 ml gas vial has been stoppered and evacuated.
___/___	2.1.18	One train of SLCRS in operation.

___/___ 2.1.19 Manager of Radiological Dose Assessment (MRDA) or the Assistant Manager of Radiological Dose Assessment (AMRDA) has requested a RCS/RSS PASS sample to include the following:

Check Requested Analysis	Sample Equipment Needed
❑ pH	PASS pH probe and pH probe cable
❑ Dissolved oxygen	Oxygen analyzer, oxygen sensor, oxygen sensor extension cord
❑ Pressurized 2 ml grab sample	2 ml grab sample chamber
❑ Depressurized 2 ml grab sample	2 ml grab sample chamber
❑ Degas liquid isotopic	"LIQUID ISOTOPIC/BORON" syringe [1]
❑ Gas isotopic	"GAS ISOTOPIC" syringe, 14.4 cc gas vial, gas vial septum
❑ Gas composition	"GAS COMP" syringe
❑ Total dissolved gas	None
❑ Chlorides	"CHLORIDES" syringe
❑ Boron	"LIQUID ISOTOPIC/BORON" syringe [1]

[1] Same syringe is used for both

2.1.20 Liquid PASS Team has completed pre–job brief as follows:

___/___ • Manager of Operational Support Center (MOSC) – designates, assembles, and briefs the Liquid PASS Team for implementation of this procedure

___/___ • Manager of Radiological Dose Assessment (MRDA) or the Assistant Manager of Radiological Dose Assessment (AMRDA) – designates one the following sample points:

Check One

- ☐ RCS Cold Leg A
- ☐ RCS Cold Leg B
- ☐ RCS Cold Leg C
- ☐ RCS Cold Leg D
- ☐ RCS Hot Leg A
- ☐ RCS Hot Leg C
- ☐ RSS Train A
- ☐ RSS Train B

___/___ • IF RCS cold leg or hot leg sample point is designated, Manager of Operational Support Center (MOSC) or designee has provided RCS system pressure.

RCS pressure: _____ psia

___/___ • Manager of Radiological Dose Assessment (MRDA) or the Assistant Manager of Radiological Dose Assessment (AMRDA) – designates one the following paths to receive PASS system effluent:

Check One

- ☐ Containment drains sump (3SSP*SOV3)
- ☐ Volume control tank (3SSP*SOV5)

___/___ • Operational Support Center Assistant Radiological Protection Supervisor (OSC ARPS) with the concurrence of the Manager of Radiological Consequence Assessment (MRCA) – specifies the radiological controls required for implementation of this procedure

2.2 Documents

2.2.1 RWP for PASS sample collection (If Health Physics determines is necessary).

2.2.2 Degas liquid sample isotopic printout

2.2.3 Gas sample isotopic printout

2.2.4 CP 801/2801/3801Y, "Routine Operation and Calibration of the Laboratory Ion Chromatography System"

2.2.5 Chem Form 801/2801/3801Y–4, "Millstone Chemistry Department Ion Chromatograph Raw Data Log"

2.2.6 CP 801/2801/3801AD, "Gas Chromatograph Operation and Calibration"

2.2.7 CP 801/2801/3801AT, "Gamma Spectroscopy Counting System Maintenance and Operation"

2.2.8 CP 3801AAB, "Operation of the Perkin–Elmer Optima 3000 DV Inductively Coupled Plasma"

2.3 **Personnel**

2.3.1 Assistant Director, Technical Support (ADTS)

2.3.2 Manager of Radiological Dose Assessment (MRDA)

2.3.3 Assistant Manager of Radiological Dose Assessment (AMRDA)

2.3.4 Manager of Radiological Consequence Assessment (MRCA)

2.3.5 Manager of Operational Support Center (MOSC)

2.3.6 Operational Support Center Assistant Radiological Protection Supervisor (OSC ARPS)

2.3.7 Manager of Control Room Operations (MCRO)

2.3.8 Liquid PASS Team consisting of at least the following personnel:

- At least two Chemistry Technicians
- At least one Health Physics Technician

2.4 **Tools and Consumables**

- 14.4 ml gas vial
- 14.4 ml gas vial stopper
- 1.0 ml pipet
- Six plastic bags
- Plastic wrap
- Rubber squeeze bulb
- 250 µl syringe labeled "LIQUID ISOTOPIC/BORON"
- 250 µl syringe labeled "GAS ISOTOPIC"
- 2.0 ml syringe labeled "CHLORIDES"
- 2.0 ml syringe labeled "GAS COMP"
- 20 ml sample bottle labeled "ISOTOPIC ORIGINAL"
- Spare syringe needles
- DI water bottle containing DI water
- Tongs
- PASS pH probe and pH probe cable
- pH housing socket
- Socket wrench
- Spanner wrench
- 11/16″ or adjustable wrench
- Phone headset
- Collection bottle for venting pH probe housing
- IC lead brick
- ICP lead brick
- 3SSP–SAS1 septums
- 7/16″ socket
- 1/2″ socket
- Scribe
- Tweezers
- Septum insertion tool
- Seven 1–liter bottles
- 36 Lead bricks
- Small test tube for IC analysis
- PASS transport cart
- 2 ml grab sample chamber
- 2 ml grab sample chamber transfer container
- Syringe transfer container
- Key to 3SSP–PNL1 (Issued to U3 Chemistry personnel)
- Key to 3SSP*V13, 3SSP*V14, 3SSP–V124, 3SWP*V839, and 3SWP*V842 (Obtained from MRCO)
- Watch
- Calculator
- Damper operating tool
- Oxygen analyzer and sensor, Orbisphere Model 26411
- Oxygen sensor extension cord
- Valve wrench

2.5 **Responsibilities**

2.5.1 Manager of Control Room Operations (MCRO) performs or directs valve lineups from the Control Room required for Liquid PASS Team acquisition and retrieval of samples.

2.5.2 The ADTS shall make the decision to obtain a sample using PASS.

2.5.3 The Manager of Operational Support Center designates, assembles and briefs the PASS team.

2.5.4 The Manager of Radiological Consequence Assessment specifies PASS team radiological controls.

2.5.5 The Operational Support Center Assistant Radiological Protection Supervisor assigns HP technicians and briefs the PASS team on radiological conditions.

2.5.6 The Manager of Radiological Dose Assessment or the Assistant Manager of Radiological Dose Assessment specify PASS team sampling and analysis requirements.

2.6 **Definitions**

2.6.1 SLCRS – supplementary leak collection and release system

2.6.2 CR – Condition Report

2.6.3 CIRCLE – to draw a circle around

3. PRECAUTIONS

3.1 Do not exceed 165°F in the PASS cabinet as read on temperature indicator T1. Damage may occur to PASS cabinet components.

3.2 The inside of 3SSP–SAS1, PASS reactor coolant sample module, is contaminated. Proper Health Physics practices and RWP requirements must be followed to prevent the spread of contamination.

3.3 Nitrogen pressures >100 psig can damage the tubing in 3SSP–PNL1.

3.4 The maximum design pressure for the pH probe is 250 psig. Do not exceed 250 psig at pH probe.

3.5 3SSP–V2008 must be positioned to "LO FLOW" when sample pressure is above 415 psia to prevent high pressure spikes due to water hammer.

3.6 The PASS sample module drains to the floor drain. The floor drains in the hydrogen recombiner building are isolated for SLCRS boundary. If a leak develops during a PASS sample, the water will back up until Operations unisolates the drain.

4. INSTRUCTIONS

4.1 Preparation for PASS Sample Acquisition

ALARA

The PASS sample module drains to the floor drain. The floor drains in the hydrogen recombiner building are isolated for SLCRS boundary. If a leak develops during a PASS sample, the water will back up until Operations unisolates the drain.

_____ 4.1.1 PERFORM the following and INITIAL Chem Form 3804K−1:

- VERIFY "General Prerequisites" have been completed
- REVIEW Section 3, "Precautions"

_____ 4.1.2 IF during performance of Sections 4.1 through 4.20 any operational problems are encountered, RECORD noted problems on Chem Form 3804K−1.

_____ 4.1.3 IF during performance of Sections 4.1 through 4.12, operational problems are encountered that will **not** allow sampling to be completed, Go To Section 4.20, "Restoration from PASS Sample Acquisition."

4.1.4 PROCEED to reactor coolant sample module with the following:

- Liquid PASS suitcase containing the following:
  - Stoppered and evacuated 14.4 ml gas vial
  - One 250 µl syringe labeled "LIQUID ISOTOPIC/BORON"
  - One 250 µl syringe labeled "GAS ISOTOPIC"
  - One 2.0 ml syringe labeled "CHLORIDES"
  - One 2.0 ml syringe labeled "GAS COMP"
  - Spare syringe needles
  - Oxygen sensor
  - Oxygen sensor extension cord
  - Oxygen analyzer
- Blank Chem Form 3804K–1 and Chem Form 3804K–2
- Key to 3SSP–PNL1 (Issued to U3 Chemistry personnel)
- Key to 3SSP*V13 (RCS sample only), 3SSP*V14, 3SSP–V124 (RSS sample only), 3SWP*V839, 3SWP*V842 (Key obtained from MCRO)
- DI water bottle containing DI water
- PASS pH probe and pH probe cable
- pH housing socket
- Socket wrench
- Spanner wrench
- 11/16″ or adjustable wrench
- Phone headset (Modes 1–4 only)
- Collection bottle for venting pH probe housing following restoration
- Calculator
- Watch
- Damper operating tool
- PASS transport cart (If shielded syringe transfer container or 2 ml grab sample chamber transfer container to be used)
- 2 ml grab sample chamber (If requested in step 2.1.19)
- 2 ml grab sample chamber transfer container (If requested in step 2.1.19)
- Syringe transfer container (If liquid isotopic/boron, gas isotopic, gas composition, or chlorides were requested)
- Valve wrench

ALARA

The inside of 3SSP–SAS1, PASS reactor coolant sample module, is contaminated. Proper Health Physics practices and RWP requirements must be followed to prevent the spread of contamination.

4.1.5 PERFORM the following at 3SSP–SAS1, PASS reactor coolant sample module:

a. OPEN sample module cabinet door.

b. INSTALL pH probe as follows:

1) FILL pH probe sensor housing with DI water.

2) REMOVE pH probe from storage solution and RINSE probe with DI water.

3) PLACE pH probe in sensor housing and PLACE collar over probe.

4) PLACE pH housing socket over collar.

5) Using spanner wrench, HOLD pH probe to prevent rotation while tightening collar.

6) Using pH housing socket, TIGHTEN collar.

7) CONNECT pH probe cable.

c. IF pressurized OR depressurized 2 ml grab sample was requested in step 2.1.19, INSTALL 2 ml grab sample chamber as follows:

1) REMOVE grab sample rig.

2) PLACE 2 ml grab sample chamber on slide tray.

3) ENSURE 2 ml grab sample chamber liquid quick connect collars are positioned in unlatching yoke.

4) CONNECT nitrogen hose with blue colored end to 2 ml grab sample chamber air operator blue colored quick connect.

5) CONNECT remaining nitrogen hose to remaining air operator quick connect.

6) PUSH slide tray into cabinet until 2 ml grab sample chamber liquid quick connects latch.

_____ d. IF grab sample rig was **not** removed, CHECK closed 3SSP–V2015, grab sample isolation.

NOTE

3SSP–V2019 is closed when the operating handle is pushed in fully. The lower access door will not close if 3SSP–V2019 is open.

_____ e. CHECK closed 3SSP–V2019, liquid septum isolation.

NOTE

3SSP–V2023 is closed when the operating handle is pushed in fully. The upper access door will not close if 3SSP–V2023 is open.

_____ f. CHECK closed 3SSP–V2023, gas septum isolation.

_____ g. CLOSE sample module cabinet door.

4.1.6 OPEN the following valves:

_____ • 3SSP–V43, reactor coolant mod SAS1 inlet isolation valve

_____ • 3SSP–V44, reactor coolant mod SAS1 outlet isolation valve

_____ 4.1.7 NOTIFY MCRO of the following:

- 3HVR*DMP60 will be opened
- IF in operating Modes 1–4, Enter LCO 3.6.6.2 for 3HVR*DMP60 [Ref. 6.1]
- 3SSP*V14 will be opened
- IF in operating Modes 1–4, Track Tech Spec surveillance requirements of 4.6.1.1.a for 3SSP*V14 [Ref. 6.1]
- IF RCS cold leg or hot leg sample was requested in step 2.1.20, NOTIFY MCRO of the following:
  - 3SSP*V13 will be opened
  - IF in operating Modes 1–4, Track Tech Spec surveillance requirements of 4.6.1.1.a for 3SSP*V13 [Ref. 6.1]

NOTE

Constant communications with the control room are required when 3SSP*V13 or 3SSP*V14 are opened in Modes 1–4.

_____ 4.1.8 IF in operating Modes 1–4, DON phone headset and ESTABLISH communications with Control Room.

4.1.9 PERFORM the following:

_____ - Using damper operating tool, OPEN 3HVR*DMP60, 3SSP–SAS1/SAS2 exhaust isolation damper [Ref. 6.1]

_____ - OPEN 3HVR–DMP1300, 3SSP–SAS1 exhaust damper [Ref. 6.1].

_____ - IF RCS cold leg or hot leg sample was requested in step 2.1.20, UNLOCK and OPEN 3SSP*V13, PASS supply isolation ctmt penetration (Z 115)

_____ - UNLOCK and OPEN 3SSP*V14, PASS return isolation ctmt penetration (Z 120)

4.1.10 PERFORM the following at 3SSP–PNL1, CTMT liquid sample remote panel:

_____ a. UNLOCK and REMOVE cover.

_____ b. OPEN front panel.

_____ c. CHECK the following valve positions:

- 3SSP–V2002, N2 storage tank isolation valve, is closed.
- 3SSP–V2003, N2 storage tank vent valve, is closed.
- 3SSP–V2000, remote module N2 supply inlet isolation valve, is open.

_____ d. CLOSE front panel.

_____ e. ZERO timer.

_____ f. PUSH and HOLD "POWER ON" button for 1 to 2 seconds to energize remote operating module and RECORD time 3SSP–PNL1, CTMT liquid sample remote panel, energized on Chem Form 3804K–1.

NOTE

A lit fuse indicator light indicates the fuse is blown.

_____ g. VERIFY line fuses and blower fuse indicator lights are **not** lit.

_____ h. BACK OFF 3SSP–PCV80, nitrogen pressure regulator, fully counterclockwise.

_____ i. OPEN 3SSP–V56, nitrogen supply to RC PNL1 remote panel 1.

NOTE

3SSP–PCV80 may require periodic adjustment to maintain 90–95 psig outlet pressure.

CAUTION

Nitrogen pressures >100 psig can damage the tubing in 3SSP–PNL1.

_____ j. ADJUST 3SSP–PCV80, nitrogen pressure regulator, to 90–95 psig.

4.1.11 PERFORM the following to align service water flow to PASS sample cooler:

a. CHECK closed the following valves:

_____ • 3SWP*V840, PA sample cooler SCL3 SW inlet drain

_____ • 3SWP*V841, PA sample cooler SCL3 SW outlet drain

NOTE

3SWP*V839 and 3SWP*V842 are located in the northern corner of the hydrogen recombiner building on the 38′ level.

b. UNLOCK and OPEN the following valves:

_____ • 3SWP*V839, PA sample cooler SCL3 service water inlet

_____ • 3SWP*V842, PA sample cooler SCL3 service water outlet

_____ 4.1.12 At 3SSP–SAS1, PASS reactor coolant sample module, CHECK exhaust fan is running.

4.1.13 IF exhaust fan is **not** running, PERFORM the following at 3SSP–PNL1, CTMT liquid sample remote panel:

_____ a. PUSH "POWER ON" button to de–energize panel.

_____ b. PUSH and HOLD "POWER ON" button for 1 to 2 seconds to energize remote operating module and RECORD time 3SSP–PNL1, CTMT liquid sample remote panel, energized on Chem Form 3804K–1.

_____ c. At 3SSP–SAS1, PASS reactor coolant sample module, CHECK exhaust fan is running.

_____ d. IF exhaust fan is **not** running, NOTIFY MOSC.

_____ 4.1.14 CHECK that service water flow is indicated on 3SWP–PDIS163 and RECORD value:

_____ psid

_____ 4.1.15 CHECK open the following valves:

- 3SSP–V41, sample cooler SCL3 inlet isolation valve
- 3SSP–V42, sample cooler SCL3 outlet isolation valve

NOTE

Valve position labels are located on the wall behind 3SSP–V186.

_____ 4.1.16 CHECK 3SSP–V186, 3–way divert to O2 analyzer AE61, in "BYPASS O2 ANALYZER" position.

NOTE

The handwheel for 3SSP–V2026, gas loop vent, is located on top of the reactor coolant sample module.

_____ 4.1.17 CHECK closed the following valves:

- 3SSP–V187, O2 analyzer AE61 outlet isolation valve
- 3SSP–V190, O2 analyzer AE61 inlet isolation valve
- 3SSP–V210, RC module SAS1 inlet test connection
- 3SSP–V2026, gas loop vent
- 3SSP–V158, leakage monitoring connection isolation
- 3SSP–V159, leakage monitoring connection isolation

4.1.18 IF dissolved oxygen measurement was requested in step 2.1.19, PERFORM the following:

_____ a. REMOVE dust cover from flow chamber.

_____ b. PLACE oxygen sensor into flow chamber.

_____ c. TIGHTEN sensor collar.

_____ d. CONNECT sensor cord to back of dissolved oxygen meter.

_____ e. SET oxygen meter "ON/OFF" switch to "ON."

f. OPEN the following valves:

_____ - 3SSP–V187, O2 analyzer AE61 outlet isolation valve

_____ - 3SSP–V190, O2 analyzer AE61 inlet isolation valve

_____ g. ROTATE 3SSP–V186, 3–way divert to O2 analyzer AE61, to "TO O2 ANALYZER" position.

4.1.19 PERFORM the following at 3SSP*PNL3, post accident sample panel:

_____ a. NOTIFY MCRO that you will be taking local control of 3SSP*CTV7 and 3SSP*CTV8 and that will cause an alarm to actuate on Main Board 1.

_____ b. PLACE 3SSP*CTV 7.8, "PASS SAMPLE VV 7&8 TRANSFER SWITCH," in "LOCAL."

NOTE

The following list of valves are manufactured by the Target Rock Corporation. These valves are designed to use system pressure to aid in their operation and may provide dual position indication when operated without system pressure. However, when system pressure is applied, the valves should move to the called for position.

_____ c. VERIFY the following valves are closed:

- 3SSP*SOV25A, "CTMT RECIRC ISOL VV"
- 3SSP*SOV25B, "CTMT RECIRC ISOL VV"
- 3SSP*SOV1A, "COLD LEG SAMPLE VV"
- 3SSP*SOV1B, "COLD LEG SAMPLE VV"
- 3SSP*SOV1C, "COLD LEG SAMPLE VV"
- 3SSP*SOV1D, "COLD LEG SAMPLE VV"
- 3SSP*SOV2A, "HOT LEG SAMPLE VV"
- 3SSP*SOV2B, "HOT LEG SAMPLE VV"
- 3SSP*SOV3, "CTMT RECIRC SUMP SMPL"
- 3SSP*SOV5, "VCT SAMPLE"
- 3SSP*CTV7, "PASS SAMPLE VV"
- 3SSP*CTV8, "PASS SAMPLE VV"

_____ d. IF RCS cold leg or hot leg sample was requested in step 2.1.20, OPEN 3SSP*CTV7, "PASS SAMPLE VV."

_____ e. OPEN 3SSP*CTV8, "PASS SAMPLE VV."

f. Refer To step 2.1.20 and ALIGN PASS system effluent as follows:

_____ • IF PASS system effluent was requested to be directed to containment drains sump, OPEN 3SSP*SOV3, "CTMT RECIRC SUMP SMPL"

_____ • IF PASS system effluent was requested to be directed to volume control tank, OPEN 3SSP*SOV5, "VCT SAMPLE"

NOTE

An increase in the reactor coolant remote operating module indicated pressure may be observed when 3SSP–V2024 is cycled.

CAUTION

Excessive cycling of the solenoid operated valves from the remote operating panel can damage the valves.

_____ 4.1.20 At 3SSP–PNL1, CTMT liquid sample remote panel, CYCLE all valves, except 3SSP–V2046, at least once.

_____ 4.1.21 IF 2 ml grab sample chamber was installed in step 4.1.5 c., CYCLE 3SSP–V2046 at least once.

NOTE

The T1 button on 3SSP–PNL1, CTMT liquid sample remote panel, should remain depressed. The temperature indicator rotary switch is used to monitor the various temperatures.

CAUTION

Damage may occur to PASS cabinet components at temperatures greater than 165°F.

_____ 4.1.22 ENSURE the T1 button is depressed.

_____ 4.1.23 SET temperature indicator rotary switch to T1.

4.1.24 PURGE 3SSP–SAS1, PASS reactor coolant sample module, gas loop with nitrogen as follows:

a. POSITION the following valves as indicated:

- 3SSP–V2008 to "LO FLOW"
- 3SSP–V2009 to "CLOSE"
- 3SSP–V2011 to "CLOSE"
- 3SSP–V2012 to "OPEN"
- 3SSP–V2013 to "GRAB"
- 3SSP–V2014 to "BYPASS"
- 3SSP–V2016 to "CLOSE"
- 3SSP–V2017 to "INLINE"
- 3SSP–V2018 to "BYPASS"
- 3SSP–V2020 to "GAS"
- 3SSP–V2021 to "BYPASS"
- 3SSP–V2022 to "BYPASS"
- 3SSP–V2024 to "OPEN"

CAUTION

The stripping pump should not be run dry for more than 5 minutes to prevent damaging the pump.

b. PUSH 3SSP–P5 "ON/OFF" button to start stripping pump.

_____ c. WHEN 30 seconds have passed, POSITION the following valves to "INLINE":

- 3SSP–V2021
- 3SSP–V2022

_____ d. WHEN 3 minutes have passed, PUSH 3SSP–P5 "ON/OFF" button to stop stripping pump.

_____ e. POSITION the following valves as indicated:

- 3SSP–V2018 to "INLINE"
- 3SSP–V2021 to "BYPASS"

_____ f. WHEN 30 seconds have passed, POSITION the following valves to "BYPASS":

- 3SSP–V2017
- 3SSP–V2018

_____ g. WHEN 30 seconds have passed, CLOSE 3SSP–V2024.

_____ h. POSITION the following valves as indicated:

- 3SSP–V2012 to "CLOSE"
- 3SSP–V2013 to "BYPASS
- 3SSP–V2020 to "LIQUID"

NOTE

1. Gas loop pressure is displayed on 3SSP–PNL1, CTMT liquid sample remote panel.
2. The gas loop pressure should stabilize at a value near zero.

4.1.25 At 3SSP–SAS1, PASS reactor coolant sample module, VENT gas loop to atmospheric pressure as follows:

_____ a. OPEN 3SSP–V2026, gas loop vent.

_____ b. WHEN gas loop pressure stabilizes, CLOSE 3SSP–V2026, gas loop vent.

_____ 4.1.26 At 3SSP–PNL1, CTMT liquid sample remote panel, POSITION 3SSP–V2022 to "BYPASS."

_____ 4.1.27 IF one of the following conditions is met, POSITION 3SSP–V2008 to "HI FLOW."

- RCS cold or hot leg sample was requested in step 2.1.20 AND RCS pressure recorded in step 2.1.20 is less than 415 psia
- RSS train A or RSS train B sample was requested in step 2.1.20

N/A 4.1.28 ~~OBSERVE totalizer reading on 3SSP–PNL1, CTMT liquid sample remote panel, and RECORD initial totalizer reading (Q_i): _____ gallons~~ ①

4.1.29 PERFORM one of the following:

_____ • IF RCS cold leg or hot leg sample was requested in step 2.1.20, OBSERVE caution sign next to 3SSP–V35 and OPEN 3SSP–V35, ctmt to sample system isolation, 3 turns

_____ • IF RSS Train A or B sample was requested in step 2.1.20, OBSERVE caution sign next to 3SSP–V124 and UNLOCK and OPEN 3SSP–V124, recirc pump flow throttle valve, 5 turns

– End of Section 4.1 –

4.2 Sample Purge

NOTE

If a leak develops in the PASS sample cooler, reactor coolant may be released to the service water system. 3SWP*RE60A monitors the service water for activity.

4.2.1 IF reactor coolant to service water leak occurs during sampling, PERFORM the following:

a. CLOSE the following valves:

- 3SSP–V41, sample cooler SCL3 inlet isolation valve
- 3SWP*V839, PA sample cooler SCL3 service water inlet
- 3SWP*V842, PA sample cooler SCL3 service water outlet

b. NOTIFY Chemistry Supervision that an estimate of the activity released must be determined.

c. Go To Section 4.20, "Restoration from PASS Sample Acquisition."

4.2.2 Refer To Chem Form 3804K–1 and VERIFY 3SSP–PNL1, CTMT liquid sample remote panel, has been energized for at least 15 minutes.

CAUTION

3SSP*SOV3 and 3SSP*SOV5 are manufactured by the Target Rock Corporation. When in the closed position, these valves may open and then re–close when system pressure is applied. They should **not** remain open for any significant length of time.

_____ 4.2.3 Refer To step 2.1.20 and Table 1 below and OPEN isolation valve for desired sample point:

Table 1	
PASS Sample Point	**Isolation Valve**
RCS cold leg A	3SSP*SOV1A
RCS cold leg B	3SSP*SOV1B
RCS cold leg C	3SSP*SOV1C
RCS cold leg D	3SSP*SOV1D
RCS hot leg A	3SSP*SOV2A
RCS hot leg C	3SSP*SOV2B
RSS Train A	3SSP*SOV25A
RSS Train B	3SSP*SOV25B

_____ 4.2.4 RECORD time purge started: _____

_____ 4.2.5 OBSERVE purge flow rate indicated on flow meter on 3SSP–PNL1, CTMT liquid sample remote panel, and RECORD value: _____ gpm ①

NOTE

~~A 100% flow indication on the flow meter on the reactor coolant post accident sample remote operating module is equal to 5 gpm.~~ ①

N/A 4.2.6 ~~PERFORM the following calculation to determine purge flow rate in gpm.~~ ①

~~Purge flow rate (gpm) = Purge flow rate (%) • 0.05~~ ①

~~Purge flow rate (gpm) = _____ • 0.05 = _____ gpm~~

_____ 4.2.7 PERFORM one of the following calculations to determine purge time in minutes.

- IF sampling RCS Cold or Hot Leg:

  Purge time = 12 ÷ purge flow rate in gpm

  Purge time = 12 ÷ _____ gpm = _____ minutes

- IF sampling RSS train A or train B:

  Purge time = 7 ÷ purge flow rate in gpm

  Purge time = 7 ÷ _____ gpm = _____ minutes

_____ 4.2.8 Refer To Chem Form 3804K–1 and MARK box corresponding to sample point.

_____ 4.2.9 WHEN purge time has passed, COLLECT samples as follows:

a. IF pH measurement was requested in step 2.1.19, Go To Section 4.3, "pH Measurement."

b. IF dissolved oxygen measurement was requested in step 2.1.19, Go To Section 4.4, "Dissolved Oxygen Measurement."

c. IF pressurized 2 ml grab sample was requested in step 2.1.19, Go To Section 4.5, "Pressurized 2 ml Grab Sample Acquisition."

d. IF depressurized 2 ml grab sample was requested in step 2.1.19, Go To Section 4.6, "Depressurized 2 ml Grab Sample Acquisition."

e. IF any of the following samples were requested in step 2.1.19, Go To Section 4.7, "Inline Sample Acquisition."

- Degas liquid isotopic
- Gas isotopic
- Gas composition
- Total dissolved gas
- Chlorides
- Boron

4.2.10 WHEN all samples requested in step 2.1.19 have been collected, Go To Section 4.9, "System Flush Prior To Sample Retrieval."

– End of Section 4.2 –

4.3 pH Measurement

_____ 4.3.1 At 3SSP–PNL1, CTMT liquid sample remote panel, POSITION temperature indicator rotary switch to T2.

4.3.2 POSITION the following valves as indicated:

_____ a. 3SSP–V2013 to "GRAB."

_____ b. 3SSP–V2016 to "OPEN." ①

_____ c. 3SSP–V2011 to "OPEN."

_____ d. 3SSP–V2009 to "OPEN." ①

_____ 4.3.3 VERIFY flow is indicated.

_____ 4.3.4 WHEN 30 seconds have passed, OBSERVE pH on 3SSP–PNL1, CTMT liquid sample remote panel.

_____ 4.3.5 WHEN pH has stabilized, RECORD the following:

- pH: _____
- Temperature: _____ °F

_____ 4.3.6 Refer To Attachment 9 and DETERMINE correction factor for measured temperature.

_____ 4.3.7 ADD correction factor to measured pH value and RECORD result as PASS sample pH in "Sample Data" table on Chem Form 3804K–1.

4.3.8 POSITION the following valves as indicated:

_____ a. 3SSP–V2016 to "CLOSE."

_____ b. 3SSP–V2011 to "CLOSE." ①

_____ c. 3SSP–V2009 to "CLOSE."

_____ d. 3SSP–V2013 to "BYPASS."

_____ 4.3.9 Go To step 4.2.9 b.

– End of Section 4.3 –

4.4 Dissolved Oxygen Measurement

_____ 4.4.1 OBSERVE reading on dissolved oxygen meter.

_____ 4.4.2 WHEN dissolved oxygen reading has stabilized, RECORD PASS sample dissolved oxygen concentration in ppb in "Sample Data" table on Chem Form 3804K–1.

_____ 4.4.3 Go To step 4.2.9 c.

– End of Section 4.4 –

4.5 Pressurized 2 ml Grab Sample Acquisition

_____ 4.5.1 POSITION 3SSP–V2046 to "SAMPLE."

_____ 4.5.2 POSITION the following valves as indicated:

- 3SSP–V2013 to "GRAB."
- 3SSP–V2014 to "GRAB."

_____ 4.5.3 WHEN 30 seconds have passed, POSITION 3SSP–V2013 to "BYPASS."

_____ 4.5.4 POSITION 3SSP–V2046 to "NORMAL AND FLUSH."

_____ 4.5.5 POSITION 3SSP–V2014 to "BYPASS."

_____ 4.5.6 RECORD 2 ml grab sample date and time in "2 ml Grab Sample" section on Chem Form 3804K–1 and MARK "Pressurized" block.

_____ 4.5.7 Go To step 4.2.9 e.

– End of Section 4.5 –

4.6 Depressurized 2 ml Grab Sample Acquisition

_____ 4.6.1 POSITION 3SSP–V2046 to "SAMPLE."

_____ 4.6.2 POSITION the following valves as indicated:

- 3SSP–V2013 to "GRAB."
- 3SSP–V2014 to "GRAB."

_____ 4.6.3 WHEN 30 seconds have passed, POSITION 3SSP–V2014 to "BYPASS."

_____ 4.6.4 POSITION 3SSP–V2046 to "NORMAL AND FLUSH."

_____ 4.6.5 POSITION 3SSP–V2013 to "BYPASS."

_____ 4.6.6 RECORD 2 ml grab sample date and time in "2 ml Grab Sample" section on Chem Form 3804K–1 and MARK "Depressurized" block.

_____ 4.6.7 Go To step 4.2.9 e.

– End of Section 4.6 –

4.7 Inline Sample Acquisition

_____ 4.7.1 At 3SSP–PNL1, CTMT liquid sample remote panel, POSITION the following valves as indicated:

- 3SSP–V2014 to "GRAB"
- 3SSP–V2008 to "LO FLOW"
- 3SSP–V2016 to "OPEN"
- 3SSP–V2012 to "OPEN"

_____ 4.7.2 WHEN 30 seconds have passed, POSITION the following valves as indicated:

- 3SSP–V2017 to "INLINE"
- 3SSP–V2018 to "INLINE"

_____ 4.7.3 WHEN 30 seconds have passed, POSITION 3SSP–V2018 to "BYPASS."

_____ 4.7.4 PUSH 3SSP–P5 "ON/OFF" button to start stripping pump.

_____ 4.7.5 WHEN 30 seconds have passed, POSITION 3SSP–V2018 to "INLINE."

_____ 4.7.6 PUSH 3SSP–P5 "ON/OFF" button to stop stripping pump.

NOTE

Flow should drop to zero when 3SSP–V2012 is closed.

_____ 4.7.7 WHEN 30 seconds have passed, POSITION 3SSP–V2012 to "CLOSE."

NOTE

Closing 3SSP–V2016 isolates a pressurized sample of known volume.

_____ 4.7.8 WHEN 30 seconds have passed, POSITION 3SSP–V2016 to "CLOSE."

4.7.9 POSITION temperature indicator rotary switch to T2.

4.7.10 RECORD the following in "Inline Sample" section on Chem Form 3804K–1:

- Inline sample date and time
- Sample temperature in °F as indicated on 3SSP–PNL1, CTMT liquid sample remote panel

4.7.11 At 3SSP*PNL3, post accident sample panel, CLOSE sample point isolation valve opened in step 4.2.3.

4.7.12 PERFORM one of the following:

a. IF RCS cold leg or hot leg sample was collected, PERFORM the following:

1) CLOSE 3SSP*CTV7, "PASS SAMPLE VV"

2) CLOSE and LOCK 3SSP*V13, PASS supply isolation ctmt penetration (Z 115).

3) NOTIFY MCRO of the following:

- 3SSP*V13 is locked closed
- IF in operating Modes 1–4, Tracking requirements of Tech Spec surveillance 4.6.1.1.a for 3SSP*V13 are no longer required [Ref 6.1]

NOTE

If a RSS sample was collected, 3SSP–V124 was opened 5 turns in step 4.1.29.

b. IF RSS Train A or B sample was collected, OBSERVE caution sign next to 3SSP–V124 and CLOSE and LOCK 3SSP–V124, recirc pump flow throttle valve.

4.7.13 At 3SSP–PNL1, CTMT liquid sample remote panel, POSITION 3SSP–V2014 to "BYPASS."

_____ 4.7.14 Go To Section 4.8, "Stripping Dissolved Gases."

– End of Section 4.7 –

4.8 Stripping Dissolved Gases

NOTE

The T1 button should remain depressed throughout this procedure. The temperature indicator rotary switch is used to monitor the various temperatures.

_____ 4.8.1 At 3SSP–PNL1, CTMT liquid sample remote panel, POSITION temperature indicator rotary switch to T3.

_____ 4.8.2 RECORD the following indications on 3SSP–PNL1, CTMT liquid sample remote panel, in "Calculations" section on Chem Form 3804K–1:

- Initial gas loop pressure (P_i) in psig
- Initial gas loop temperature (T_i) in °F

_____ 4.8.3 POSITION the following valves as indicated:

- 3SSP–V2021 to "INLINE"
- 3SSP–V2022 to "INLINE"

NOTE

Gas loop pressure should increase as gas is released from the isolated sample into the gas loop.

_____ 4.8.4 POSITION 3SSP–V2020 to "GAS" and WAIT 10 seconds.

_____ 4.8.5 POSITION 3SSP–V2020 to "LIQUID."

_____ 4.8.6 PUSH 3SSP–P5 "ON/OFF" button to start stripping pump.

_____ 4.8.7 <u>WHEN</u> 2 minutes has passed, PUSH 3SSP–P5 "ON/OFF" button to stop stripping pump.

_____ 4.8.8 POSITION 3SSP–V2020 to "GAS" and WAIT 10 seconds.

_____ 4.8.9 POSITION 3SSP–V2020 to "LIQUID."

4.8.10 PUSH 3SSP–P5 "ON/OFF" button to start stripping pump.

4.8.11 WHEN 2 minutes have passed, PUSH 3SSP–P5 "ON/OFF" button to stop stripping pump.

4.8.12 POSITION 3SSP–V2020 to "GAS" and WAIT 10 seconds.

4.8.13 POSITION 3SSP–V2020 to "LIQUID."

4.8.14 PUSH 3SSP–P5 "ON/OFF" button to start stripping pump.

4.8.15 WHEN 2 minutes have passed, PUSH 3SSP–P5 "ON/OFF" button to stop stripping pump.

4.8.16 POSITION 3SSP–V2020 to "GAS" and WAIT 10 seconds.

4.8.17 POSITION 3SSP–V2020 to "LIQUID."

4.8.18 POSITION the following valves as indicated:

- 3SSP–V2017 to "BYPASS"
- 3SSP–V2018 to "BYPASS"

4.8.19 PUSH 3SSP–P5 "ON/OFF" button to start stripping pump.

4.8.20 WHEN 30 seconds has passed, PUSH 3SSP–P5 "ON/OFF" button to stop stripping pump.

4.8.21 POSITION 3SSP–V2020 to "GAS" and WAIT 10 seconds.

4.8.22 PERFORM the following:

a. RECORD the following indications on 3SSP–PNL1, CTMT liquid sample remote panel:

- Gas loop pressure (P_f): _____ psig
- Gas loop temperature (T_f): _____ °F

b. POSITION temperature indicator rotary switch to T2 and RECORD liquid loop temperature (T_{liq}): _____ °F

_____ 4.8.23 PUSH 3SSP–P5 "ON/OFF" button to start stripping pump.

_____ 4.8.24 WHEN 2 minute has passed, PUSH 3SSP–P5 "ON/OFF" button to stop stripping pump.

4.8.25 PERFORM the following:

_____ a. POSITION temperature indicator rotary switch to T3.

_____ b. RECORD the following indications on 3SSP–PNL1, CTMT liquid sample remote panel:

- Gas loop pressure (P_f): _____ psig
- Gas loop temperature (T_f): _____ °F

_____ c. POSITION temperature indicator rotary switch to T2 and RECORD liquid loop temperature (T_{liq}): _____ °F

_____ 4.8.26 Refer To steps 4.8.22 and 4.8.25 and RECORD the following data on Chem Form 3804K–1 from the step containing the highest gas loop pressure reading:

- Final gas loop pressure (P_f)
- Final gas loop temperature (T_f)
- Final liquid loop temperature (T_{liq})

NOTE

Step 4.8.27 isolates the liquid and gas samples in their sample chambers.

_____ 4.8.27 POSITION the following valves as indicated:

- 3SSP–V2017 to "BYPASS"
- 3SSP–V2018 to "BYPASS"
- 3SSP–V2021 to "BYPASS"
- 3SSP–V2022 to "BYPASS"

4.8.28 Go To Section 4.9, "System Flush Prior To Sample Retrieval."

– End of Section 4.8 –

4.9 System Flush Prior To Sample Retrieval

4.9.1 POSITION the following valves as indicated:

_____ a. 3SSP–V2012 to "OPEN."

_____ b. 3SSP–V2024 to "OPEN."

_____ 4.9.2 PUSH 3SSP–P5 "ON/OFF" button to start stripping pump.

_____ 4.9.3 WHEN 30 seconds have passed, PUSH 3SSP–P5 "ON/OFF" button to stop stripping pump.

_____ 4.9.4 WHEN 30 seconds have passed, POSITION 3SSP–V2024 to "CLOSE."

_____ 4.9.5 POSITION the following valves as indicated:

- 3SSP–V2009 to "OPEN"
- 3SSP–V2011 to "OPEN"
- 3SSP–V2012 to "CLOSE"
- 3SSP–V2013 to "GRAB"
- 3SSP–V2014 to "BYPASS"
- 3SSP–V2016 to "OPEN"
- 3SSP–V2020 to "LIQUID"

_____ 4.9.6 CHECK open 3SSP–V113, 3SSP–P3 discharge isolation valve.

_____ 4.9.7 VERIFY flush pump oil level is visible in bullseye.

_____ 4.9.8 VERIFY flush tank is full.

CAUTION

Rapid opening or closing of 3SSP–V116 will result in water hammer. 3SSP–V116 must be opened and closed slowly to prevent water hammer. ①

_____ 4.9.9 IF flush tank is not full, FILL tank as follows:

a. Slowly, OPEN 3SSP–V116, SSP–TK2 fill. ①

b. WHEN the full light comes on, slowly, CLOSE 3SSP–V116, SSP–TK2 fill.

4.9.10 PERFORM one of the following:

_____ • IF RCS cold leg or hot leg sample was collected, OPEN 3SSP–V37, loop sample path flush valve

_____ • IF RSS Train A or B sample was collected, OPEN 3SSP–V157, reactor coolant module flush water valve

NOTE

1. The flushing pump "ON/OFF" switch is located on the flushing pump skid.
2. Flow indication should be evident on the flow meter during flushing.

_____ 4.9.11 PLACE flushing pump "ON/OFF" switch in "ON" position to start flushing pump.

_____ 4.9.12 PUSH 3SSP–P5 "ON/OFF" button to start stripping pump.

_____ 4.9.13 POSITION 3SSP–V2008 to "HI FLOW."

_____ 4.9.14 RECORD time: _____

NOTE

Several valves in 3SSP–SAS1, PASS reactor coolant sample module, are cycled three times to ensure that the sample is flushed from under the valve seats.

_____ 4.9.15 CYCLE the following valves at least three times:

- ~~3SSP–V2009~~ ①
- ~~3SSP–V2011~~
- 3SSP–V2016

4.9.16 WHEN 5 minutes have passed beyond time recorded in step 4.9.14, POSITION the following valves as indicated:

_____ a. 3SSP–V2012 to "OPEN"

_____ b. 3SSP–V2009 to "CLOSE"

_____ c. 3SSP–V2011 to "CLOSE"

_____ 4.9.17 RECORD time: _____

_____ 4.9.18 CYCLE 3SSP–V2012 at least three times.

4.9.19 IF Section 4.9 is being repeated due to high radiation reading measured in step 4.9.25, PERFORM the following:

_____ a. WHEN 2 minutes have passed beyond time recorded in step 4.9.17, POSITION 3SSP–V2020 to "GAS."

4.9.20 WHEN 2 minutes have passed, PERFORM the following:

_____ a. PUSH 3SSP–P5 "ON/OFF" button to stop stripping pump.

_____ b. POSITION 3SSP–V2012 to "CLOSE."

_____ c. POSITION 3SSP–V2013 to "BYPASS."

_____ d. POSITION 3SSP–V2016 to "CLOSE."

_____ 4.9.21 WAIT 1 minute.

_____ 4.9.22 IF 2 ml grab sample was collected, PERFORM the following:

_____ a. POSITION the following valves as indicated:

- 3SSP–V2013 to "GRAB"
- 3SSP–V2014 to "GRAB"

_____ b. WAIT 1 minute.

_____ 4.9.23 PLACE flushing pump "ON/OFF" switch in "OFF" position to stop flushing pump.

Health Physics Technician

4.9.24 Using the following, MEASURE radiation levels in room containing 3SSP–SAS1, PASS reactor coolant sample module:

_____

- Radiation level in R/hr indicated on meter on 3SSP–PNL1, CTMT liquid sample remote panel
- Radiation level indicated on radiation survey meter

4.9.25 Based on radiation reading, DIRECT Chemistry Technicians to perform one of the following:

_____

- Go To step 4.9.5 and REPEAT flush

_____

- Go To step 4.9.26 and retrieve samples

Chemistry Technician

4.9.26 RETRIEVE inline samples as follows:

_____ a. IF pressurized OR depressurized 2 ml grab sample was requested in step 2.1.19, Go To Section 4.10, "Retrieval of 2 ml Grab Sample."

_____ b. IF any of the following analyses were requested in step 2.1.19, Go To Section 4.11, "Retrieval of Degas Liquid Samples."

- Degas liquid isotopic
- Chlorides
- Boron

_____ c. IF any of the following analyses were requested in step 2.1.19, Go To Section 4.12, "Retrieval of Gas Samples."

- Gas isotopic
- Gas composition

NOTE

If sufficient personnel are available, Sections 4.13 and 4.20 may be performed simultaneously.

4.9.27 WHEN all samples requested in step 2.1.19 have been retrieved, PERFORM the following:

_____ • TRANSPORT samples to laboratory and Go To Section 4.13, "Sample Analysis"

_____ • Go To Section 4.20, "Restoration from PASS Sample Acquisition"

– End of Section 4.9 –

4.10 Retrieval of 2 ml Grab Sample

_____ 4.10.1 OPEN 3SSP–SAS1, PASS reactor coolant sample module, lower access door.

_____ 4.10.2 PULL unlatching knob on slide tray to disconnect liquid quick connects.

_____ 4.10.3 PULL slide tray out of sample cabinet.

_____ 4.10.4 DISCONNECT nitrogen hoses from 2 ml grab sample chamber.

_____ 4.10.5 REMOVE 2 ml grab sample chamber and PLACE in 2 ml grab sample chamber transfer container.

_____ 4.10.6 PLACE lid on 2 ml grab sample chamber transfer container.

_____ 4.10.7 IF any of the following analyses were requested in step 2.1.19, Go To step 4.11.2:

- Degas liquid isotopic
- Chlorides
- Boron

_____ 4.10.8 CLOSE 3SSP–SAS1, PASS reactor coolant sample module, lower access door.

_____ 4.10.9 Go To step 4.9.26 b.

– End of Section 4.10 –

4.11 Retrieval of Degas Liquid Samples

_____ 4.11.1 At 3SSP–SAS1, PASS reactor coolant sample module, OPEN lower access door.

NOTE

Experience has shown that the best results are achieved when the syringe plunger is pulled back quickly to initiate sample flow into the syringe.

_____ 4.11.2 IF liquid isotopic or boron analysis was requested in step 2.1.19, PERFORM the following:

a. VERIFY needle is screwed fully into 250 µl syringe labeled "LIQUID ISOTOPIC/BORON."

b. OPEN 3SSP–V2019, liquid septum isolation.

c. INSERT syringe into needle guide until syringe nut is engaged.

ALARA

1. Do **not** unscrew syringe body more than 2 turns counterclockwise. Excessive turns will disengage needle from syringe.
2. Steps 4.11.2 d. and e. should be performed rapidly to minimize exposure.

d. Rapidly DRAW 100 µl of liquid sample into syringe and TURN syringe body 2 turns counterclockwise to lock sample in syringe.

e. REMOVE syringe from needle guide and PLACE into syringe transfer container and PLACE lid on syringe transfer container.

f. CLOSE 3SSP–V2019, liquid septum isolation.

_____ 4.11.3 IF chloride analysis was requested in step 2.1.19, PERFORM the following:

a. VERIFY needle is screwed fully into 2.0 ml syringe labeled "CHLORIDES."

b. OPEN 3SSP–V2019, liquid septum isolation.

c. INSERT syringe into needle guide until syringe nut is engaged.

ALARA

1. Do **not** unscrew syringe body more than 2 turns counterclockwise. Excessive turns will disengage needle from syringe.
2. Steps 4.11.3 d. and e. should be performed rapidly to minimize exposure.

d. Rapidly DRAW 1.0 ml of liquid sample into syringe and TURN syringe body 2 turns counterclockwise to lock sample in syringe.

e. REMOVE syringe from needle guide and PLACE into syringe transfer container and PLACE lid on syringe transfer container.

f. CLOSE 3SSP–V2019, liquid septum isolation.

_____ 4.11.4 CLOSE lower access door.

_____ 4.11.5 Go To step 4.9.26 c.

– End of Section 4.11 –

4.12 **Retrieval of Gas Samples**

_____ 4.12.1 At 3SSP–SAS1, PASS reactor coolant sample module, OPEN upper access door.

NOTE

1. Experience has shown that the best results are achieved when the syringe plunger is pulled back quickly to initiate sample flow into the syringe.
2. Occasionally a small amount of water is drawn into the syringe. The syringe sample volume without water is recorded as the volume of gas sample in syringe (V_t).

_____ 4.12.2 IF gas isotopic analysis was requested in step 2.1.19, PERFORM the following:

a. VERIFY needle is screwed fully into 250 µl syringe labeled "GAS ISOTOPIC."

b. OPEN 3SSP–V2023, gas septum isolation.

c. INSERT syringe into needle guide until syringe nut is engaged.

ALARA

1. Do **not** unscrew syringe body more than 2 turns counterclockwise. Excessive turns will disengage needle from syringe.
2. Steps 4.12.2 d. through i. should be performed rapidly to minimize exposure.

d. Rapidly DRAW 100 µl gas sample into syringe and TURN syringe body 2 turns counterclockwise to lock sample in syringe.

e. REMOVE syringe from needle guide.

f. RECORD volume of gas sample in syringe (V_t):
_____ cc

g. INSERT needle into stoppered 14.4 ml gas vial.

h. UNLOCK syringe and INJECT gas contents into stoppered 14.4 ml gas vial.

i. PLACE syringe and gas vial into syringe transfer container and PLACE lid on syringe transfer container.

j. CLOSE 3SSP–V2023, gas septum isolation.

NOTE

1. The "GAS COMP" results are for information only and are not used in any sample calculations.
2. Experience has shown that the best results are achieved when the syringe plunger is pulled back quickly to initiate sample flow into the syringe.

_____ 4.12.3 IF gas composition analysis was requested in step 2.1.19, PERFORM the following:

a. VERIFY needle is screwed fully into 2.0 ml syringe labeled "GAS COMP."

b. OPEN 3SSP–V2023, gas septum isolation.

c. INSERT syringe into needle guide until syringe nut is engaged.

ALARA

1. Do **not** unscrew syringe body more than 2 turns counterclockwise. Excessive turns will disengage needle from syringe.
2. Steps 4.12.2 d. and e. should be performed rapidly to minimize exposure.

d. Rapidly DRAW 1 cc gas sample into syringe and TURN syringe body 2 turns counterclockwise to lock sample in syringe.

e. REMOVE syringe from needle guide and PLACE syringe into syringe transfer container and PLACE lid on syringe transfer container.

f. CLOSE 3SSP–V2023, gas septum isolation.

_____ 4.12.4 CLOSE upper access door.

_____ 4.12.5 Go To step 4.9.27

– End of Section 4.12 –

4.13 Sample Analysis

Chemistry Technician

4.13.1 IF pressurized 2 ml grab sample or depressurized 2 ml grab sample was retrieved, PLACE 2 ml grab sample chamber in shielded location for future off–site transport.

Health Physics Technician

4.13.2 IF liquid in–line samples OR gaseous in–line samples were retrieved, DETERMINE handling requirements as follows:

a. OPEN transport container cover and MEASURE dose rate.

b. IF dose rate is greater than or equal to 1 R/hr, NOTIFY OSC ARPS and REQUEST instructions for handling.

c. IF dose rate is less than 1 R/hr, DIRECT Chemistry Technicians to handle samples as normal radioactive samples and to minimize radiation exposure when performing required analyses.

Chemistry Technician

4.13.3 Refer To the following Sections as applicable and PERFORM analysis:

- Section 4.14, "Degas Liquid Isotopic Analysis"
- Section 4.15, "Boron Analysis"
- Section 4.16, "Chloride Analysis"
- Section 4.17, "Gas Isotopic Analysis"
- Section 4.18, "Gas Composition Analysis"
- Section 4.19, "Total Dissolved Gas Determination"

4.13.4 IF degas liquid isotopic sample and gas isotopic sample were analyzed, PERFORM the following:

a. Refer To "Gamma Activity" section on Chem Form 3804K–1 and ADD degas liquid activity to gas activity and RECORD as gamma activity in µCi/gm.

b. RECORD PASS sample Gamma activity in µCi/gm in "Sample Data" table on Chem Form 3804K–1.

4.13.5 WHEN analysis are complete, REPORT results to MRDA or AMRDA.

4.13.6 SIGN and DATE "Performed By" section on Chem Form 3804K–1.

4.13.7 IF copies of results are requested, FAX or SEND copies of the following to requesting individuals:

- Attachment 3
- Attachment 4
- Chem Form 3804K–1

4.13.8 IF any diluted sample bottles measuring greater than or equal to 100 mR/hr were prepared in step 4.14.6, PERFORM the following:

a. REQUEST OSC ARPS to provide disposal instructions for diluted sample liter bottles.

b. DISPOSE of high–level sample liter bottles as directed by OSC ARPS.

4.13.9 IF Section 4.20, "Restoration from PASS Sample Acquisition," has **not** been completed, Go To Section 4.20 and COMPLETE PASS system restoration.

– End of Section 4.13 –

4.14 Degas Liquid Isotopic Analysis

_____ 4.14.1 PREPARE "ISOTOPIC ORIGINAL" bottle as follows:

a. TARE bottle.

b. ADD 10 ml DI water and RECORD mass: _____ gm

c. TARE bottle.

ALARA

Steps 4.14.1 d. through g. should be performed rapidly to minimize exposure.

d. REMOVE "LIQUID ISOTOPIC/BORON" syringe from syringe transfer container.

e. INJECT contents of "LIQUID ISOTOPIC/BORON" syringe into 20 ml bottle labeled "ISOTOPIC ORIGINAL" and RECORD mass: _____ gm

f. PLACE empty "LIQUID ISOTOPIC/BORON" syringe in shielded location.

g. Using tongs, REMOVE and CAP bottle and INVERT several times to mix..

_____ 4.14.2 CIRCLE "Isotopic Original" and RECORD sample mass recorded in step 4.14.1 e. on Attachment 2.

_____ 4.14.3 MEASURE dose rate of "ISOTOPIC ORIGINAL" bottle.

_____ 4.14.4 IF dose rate of sample bottle is greater than or equal to 25 mR/hr, Go To step 4.14.6.

_____ 4.14.5 IF dose rate of "ISOTOPIC ORIGINAL" bottle is less than 25 mR/hr, Go To step 4.14.7.

4.14.6 DILUTE sample using 1000:1 (solvent:solute) dilution factor as follows:

a. TRANSFER 1.0 ml from bottle containing sample (solute bottle) into 1 liter bottle filled with DI water (solvent bottle) and CAP bottle.

b. PLACE solute bottle in plastic bag.

c. STORE solute bottle in shielded location.

d. Using tongs, INVERT solvent bottle several times to mix.

e. LABEL solvent liter bottle either "1st, "2nd, "3rd, "4th, "5th, "6th, or "7th DILUTION," as applicable, for the 1000:1 dilution being performed.

f. CIRCLE either "1st, "2nd, "3rd, "4th, "5th, "6th, or "7th Dilution" in Sample Dilution column on Attachment 2, as applicable, for the 1000:1 dilution being performed.

g. MEASURE dose rate of solvent liter bottle.

h. IF dose rate of solvent liter bottle is less than 25 mR/hr, Go To step 4.14.7.

i. IF dose rate of solvent liter bottle is greater than or equal to 25 mR/hr, Go To step 4.14.6 a..

4.14.7 DETERMINE degas liquid isotopic activity as follows:

a. PLACE 2.5 cm shelf in detector to be used for degas liquid isotopic analysis.

b. Using the following information, Refer To CP 801/2801/3801AT, "Gamma Spectroscopy Counting System Maintenance and Operation," and ANALYZE sample:

- Closed cave
- Applicable geometry for shelf being used
- Five minute count time
- General library
- Sample mass corresponding to the last circled sample dilution on Attachment 2
- Inline sample date and time as recorded on Chem Form 3804K–1.

c. IF dead time is greater than or equal to 20%, PERFORM the following:

1) ABORT count.

2) Go To step 4.14.6.

d. STORE sample bottle in shielded location.

e. DETERMINE background as follows:

1) Using the following information, Refer To CP 801/2801/3801AT, "Gamma Spectroscopy Counting System Maintenance and Operation," and PERFORM background count on detector that was used for degas liquid isotopic analysis.

- Closed cave
- Applicable geometry for shelf that was used
- Five minute count time
- General library
- Sample mass corresponding to the last circled sample dilution on Attachment 2
- Counting shelf removed

2) RECORD all identified isotopes and their associated background activity levels in µCi/gm on Attachment 3.

f. Refer To Attachment 3 and CALCULATE degas liquid activity as follows:

1) Refer To degas liquid isotopic printout and RECORD all identified isotopes and their associated activity levels in µCi/gm.

2) For each isotope listed, SUBTRACT background activity from printout activity and RECORD as isotope activity in µCi/gm.

3) ADD isotope activities and RECORD as degas liquid activity in µCi/gm.

4) RECORD degas liquid activity in µCi/gm in "Gamma Activity" section of Chem Form 3804K−1.

4.14.8 Go To step 4.13.3 and COMPLETE any remaining analysis.

– End of Section 4.14 –

4.15 Boron Analysis

_____ 4.15.1 WHEN sample bottle labeled "ISOTOPIC ORIGINAL" is no longer need for isotopic analysis, Refer To CP 3801AAB, "Operation of the Perkin–Elmer Optima 3000 DV Inductively Coupled Plasma," and ANALYZE sample bottle for boron.

_____ 4.15.2 PERFORM the following calculation to determine correction factor:

$$\text{Correction factor} = \frac{\text{DI water mass (page 56, step 4.14.1} + \text{Sample mass (page 56, step 4.14.1 e.)}}{\text{Sample mass (page 56, step 4.14.1 e.)}}$$

$$\text{Correction factor} = \frac{\_\_\_\_\_\ \text{gm} + \_\_\_\_\_\ \text{gm}}{\_\_\_\_\_\ \text{gm}} = \_\_\_\_\_$$

_____ 4.15.3 PERFORM the following calculation to determine boron concentration in ppm and RECORD in "Sample Data" table on Chem Form 3804K–1.

Boron (ppm) = Analysis result in ppb • Correction factor / 1000

Boron (ppm) = _____ ppb • _____ / 1000 = _____ ppm

_____ 4.15.4 PLACE "ISOTOPIC ORIGINAL" sample bottle in shielded location.

_____ 4.15.5 Go To step 4.13.3 and COMPLETE any remaining analysis.

– End of Section 4.15 –

4.16 Chloride Analysis

_____ 4.16.1 REMOVE "CHLORIDES" syringe from syringe transfer container.

_____ 4.16.2 INJECT contents of "CHLORIDES" syringe into small test tube located in lead brick at IC.

_____ 4.16.3 Refer To CP 801/2801/3801Y, "Routine Operation and Calibration of the Laboratory Ion Chromatography Systems," and ANALYZE sample for chlorides.

_____ 4.16.4 PLACE empty "CHLORIDES" syringe in shielded location.

_____ 4.16.5 RECORD chloride concentration in ppb in "Sample Data" table on Chem Form 3804K–1.

_____ 4.16.6 Go To step 4.13.3 and COMPLETE any remaining analysis.

– End of Section 4.16 –

4.17 Gas Isotopic Analysis

_____ 4.17.1 PERFORM the following calculation to determine gas isotopic sample mass in grams:

V_t = volume of gas sample in syringe = _____ cc
(page 51, step 4.12.2 f.)

M_{samp} = gas isotopic sample mass in gm

$$M_{samp} = \frac{V_t \bullet 5.71}{V_t + 5} = \frac{\_\_\_\_\_ \bullet 5.71}{\_\_\_\_\_ + 5} = \_\_\_\_\_ \text{ gm}$$

_____ 4.17.2 PLACE 2.5 cm shelf in detector to be used for gas isotopic analysis.

4.17.3 DETERMINE gas isotopic activity as follows:

_____ a. Using the following information, Refer To CP 801/2801/3801AT, "Gamma Spectroscopy Counting System Maintenance and Operation," and ANALYZE sample:

- Open cave
- Applicable geometry for shelf being used
- Five minute count time
- General library
- Sample mass calculated in step 4.17.1
- Inline sample date and time as recorded on Chem Form 3804K−1

_____ b. IF dead time is greater than or equal to 20%, PERFORM the following:

1) ABORT count.
2) REPLACE shelf with next higher shelf.
3) Go To step 4.17.3.

_____ c. STORE gas vial in shielded location.

d. DETERMINE background as follows:

1) Using the following information, Refer To CP 801/2801/3801AT, "Gamma Spectroscopy Counting System Maintenance and Operation," and PERFORM background count on detector that was used for gas isotopic analysis.

- Open cave
- Applicable geometry for shelf that was used
- Five minute count time
- General library
- Sample mass calculated in step 4.17.1
- Counting shelf removed

2) RECORD all identified isotopes and their associated background activity levels in µCi/gm on Attachment 4.

e. Refer To Attachment 4 and CALCULATE gas activity as follows:

1) Refer To gas isotopic printout and RECORD all identified isotopes and their associated activity levels in µCi/gm.

2) For each isotope listed, SUBTRACT background activity from printout activity and RECORD as isotope activity in µCi/gm.

3) ADD isotope activities and RECORD as gas activity in µCi/gm.

4) RECORD gas activity in µCi/gm in "Gamma Activity" section of Chem Form 3804K−1.

4.17.4 PLACE empty "GAS ISOTOPIC" syringe in shielded location.

4.17.5 Go To step 4.13.3 and COMPLETE any remaining analysis.

– End of Section 4.17 –

4.18 Gas Composition Analysis

NOTE

The "GAS COMP" results are for information only and are not used in any sample calculations.

_____ 4.18.1 Refer To CP 801/2801/3801AD, "Gas Chromatograph Operation and Calibration," and ANALYZE 2.0 ml syringe labeled "GAS COMP" for the following:

- % hydrogen
- % oxygen
- % nitrogen

_____ 4.18.2 PLACE empty "GAS COMP" syringe in shielded location.

_____ 4.18.3 WHEN analysis is complete, RECORD gas composition results in % in "Sample Data" table on Chem Form 3804K–1.

_____ 4.18.4 Go To step 4.13.3 and COMPLETE any remaining analysis.

– End of Section 4.18 –

4.19 Total Dissolved Gas Determination

4.19.1 Refer To Chem Form 3804K−1 and PERFORM the following in "Calculations" section:

_____ a. Using final liquid loop temperature (T_{liq}), Refer To Attachment 1 and RECORD water vapor pressure in psi (P_{wv}).

_____ b. Using final liquid loop temperature (T_{liq}), Refer To Attachment 8 and RECORD the following:

- Henry's constant for nitrogen (H_n)
- Henry's constant for hydrogen (H_h)

_____ c. CALCULATE the following:

- Initial gas loop pressure
- Final gas loop pressure
- Initial gas loop temperature
- Final gas loop temperature
- Initial mols in gas loop
- Final mols in gas loop
- Water vapor mols in gas loop following degassing
- Dissolved nitrogen mols following degassing
- Dissolved gas corresponding to gas released
- Dissolved gas remaining in solution
- Total dissolved gas

_____ 4.19.2 RECORD total dissolved gas in cc (STP)/kg H_2O in "Sample Data" table on Chem Form 3804K−1.

_____ 4.19.3 Go To step 4.13.3 and COMPLETE any remaining analysis.

– End of Section 4.19 –

4.20 Restoration from PASS Sample Acquisition

NOTE

Entry into Section 4.20 may occur at any time during performance of Sections 4.1 through 4.12. Some steps in Section 4.20 may already be completed depending on the entry point.

_____ 4.20.1 At 3SSP*PNL3, post accident sample panel, VERIFY the following valves are closed:

- 3SSP*SOV25A, "CTMT RECIRC ISOL VV"
- 3SSP*SOV25B, "CTMT RECIRC ISOL VV"
- 3SSP*SOV1A, "COLD LEG SAMPLE VV"
- 3SSP*SOV1B, "COLD LEG SAMPLE VV"
- 3SSP*SOV1C, "COLD LEG SAMPLE VV"
- 3SSP*SOV1D, "COLD LEG SAMPLE VV"
- 3SSP*SOV2A, "HOT LEG SAMPLE VV"
- 3SSP*SOV2B, "HOT LEG SAMPLE VV"
- 3SSP*SOV5, "VCT SAMPLE"
- 3SSP*CTV7, "PASS SAMPLE VV"

4.20.2 IF 3SSP*V13, PASS supply isolation ctmt penetration (Z 115), is open, PERFORM the following:

_____ a. CLOSE and LOCK 3SSP*V13, PASS supply isolation ctmt penetration (Z 115).

_____ b. NOTIFY MCRO of the following:

- 3SSP*V13 is locked closed
- IF in operating Modes 1–4, tracking requirements of Tech Spec surveillance 4.6.1.1.a for 3SSP*V13 are no longer required [Ref 6.1].

4.20.3 IF 3SSP–V124, recirc pump flow throttle valve, was opened in step 4.1.29, OBSERVE caution sign next to 3SSP–V124 and VERIFY 3SSP–V124 is closed.

4.20.4 IF sample flow was achieved at any time during PASS sample, FLUSH PASS system as follows:

a. IF Section 4.9, "System Flush," has **not** been performed, PERFORM Section 4.9.

b. At 3SSP–PNL1, CTMT liquid sample remote panel, POSITION the following valves as indicated:

- 3SSP–V2008 to "LO FLOW"
- 3SSP–V2009 to "CLOSE" ①
- 3SSP–V2011 to "CLOSE"
- 3SSP–V2012 to "OPEN"
- 3SSP–V2017 to "INLINE"
- 3SSP–V2018 to "BYPASS"
- 3SSP–V2020 to "GAS"
- 3SSP–V2024 to "OPEN"

c. PUSH 3SSP–P5 "ON/OFF" button to start stripping pump.

d. WHEN 30 seconds have passed, POSITION the following valves as indicated:

- 3SSP–V2021 to "INLINE"
- 3SSP–V2022 to "INLINE"

e. WHEN 3 minutes have passed, PUSH 3SSP–P5 "ON/OFF" button to stop stripping pump.

f. POSITION 3SSP–V2018 to "INLINE."

g. POSITION 3SSP–V2021 to "BYPASS."

_____ h. WHEN 30 seconds have passed, POSITION the following valves as indicated:

- 3SSP–V2017 to "BYPASS"
- 3SSP–V2018 to "BYPASS"

_____ i. WHEN 30 seconds have passed, POSITION 3SSP–V2024 to "CLOSE."

_____ j. At 3SSP–PNL1, CTMT liquid sample remote panel, POSITION the following valves as indicated.

- 3SSP–V2008 to "HI FLOW"
- ~~3SSP–V2009 to "OPEN"~~ ①
- ~~3SSP–V2011 to "OPEN"~~
- 3SSP–V2013 to "GRAB"
- 3SSP–V2014 to "BYPASS"
- 3SSP–V2016 to "OPEN"
- 3SSP–V2017 to "INLINE"
- 3SSP–V2018 to "BYPASS"
- 3SSP–V2020 to "LIQUID"

_____ k. VERIFY flush pump oil level is visible in bullseye.

CAUTION

Rapid opening or closing of 3SSP–V116 will result in water hammer. 3SSP–V116 must be opened and closed slowly to prevent water hammer. ①

_____ l. VERIFY flush tank is full.

_____ m. IF flush tank is not full, FILL tank as follows:

1) Slowly, OPEN 3SSP–V116, SSP–TK2 fill. ①

2) WHEN full light comes on, slowly, CLOSE 3SSP–V116, SSP–TK2 fill.

NOTE

The flushing pump "ON/OFF" switch is located on the flushing pump skid.

_____ n. PUSH flushing pump "ON/OFF" switch to "ON" to start flushing pump.

_____ o. PUSH 3SSP–P5 "ON/OFF" button to start stripping pump.

_____ p. WHEN 3 minutes have passed, POSITION 3SSP–V2018 to "INLINE."

_____ q. PUSH 3SSP–P5 "ON/OFF" button to stop stripping pump.

_____ r. WHEN 3 minutes have passed, POSITION the following valves as indicated:

- 3SSP–V2017 to "BYPASS"
- 3SSP–V2018 to "BYPASS"

_____ s. POSITION 3SSP–V2013 to "BYPASS."

t. WHEN 30 seconds have passed, POSITION the following valves as indicated:

_____ 1) 3SSP–V2016 to "CLOSE."

_____ 2) 3SSP–V2012 to "CLOSE."

N/A 3) ~~3SSP–V2009 to "CLOSE."~~ ①

N/A 4) ~~3SSP–V2011 to "CLOSE."~~

_____ u. PUSH flushing pump "ON/OFF" switch to "OFF" to stop flushing pump.

v. PERFORM one of the following:

- _____ IF RCS cold leg or hot leg sample was collected, CLOSE 3SSP–V37, loop sample path flush valve
- _____ IF RSS Train A or B sample was collected, CLOSE 3SSP–V157, reactor coolant module flush water valve

CAUTION

Rapid opening or closing of 3SSP–V116 will result in water hammer. 3SSP–V116 must be opened and closed slowly to prevent water hammer.

①

w. IF flush tank is not full, FILL tank as follows:

1) _____ Slowly, OPEN 3SSP–V116, SSP–TK2 fill. ①

2) _____ WHEN full light comes on, slowly, CLOSE 3SSP–V116, SSP–TK2 fill.

x. At 3SSP–SAS1, PASS reactor coolant sample module, VENT gas loop to atmospheric pressure as follows:

1) _____ OPEN 3SSP–V2026, gas loop vent.

2) _____ WHEN gas loop pressure stabilizes, CLOSE 3SSP–V2026, gas loop vent.

4.20.5 CLOSE the following valves:

- _____ 3SSP–V43, reactor coolant mod SAS1 inlet isolation valve
- _____ 3SSP–V44, reactor coolant mod SAS1 outlet isolation valve

4.20.6 VENT pH probe housing as follows:

_____ a. REMOVE cap from 3SSP–V210, RC module SAS1 inlet test connection.

_____ b. PLACE collection bottle at outlet of 3SSP–V210 and OPEN 3SSP–V210, RC module SAS1 inlet test connection, to vent pH probe housing.

_____ c. At 3SSP–PNL1, CTMT liquid sample remote panel, POSITION 3SSP–V2009 to "OPEN." ①

_____ d. CLOSE and CAP 3SSP–V210, RC module SAS1 inlet test connection.

4.20.7 At 3SSP–PNL1, CTMT liquid sample remote panel, PERFORM the following:

_____ a. POSITION 3SSP–V2009 to "CLOSE."

N/A b. ~~RECORD final totalizer reading (Q_f): _____ gallons~~ ①

_____ c. Refer To Chem Form 3804K–2 and PERFORM valve lineup for valves at 3SSP–PNL1.

_____ d. CLOSE 3SSP–V56, nitrogen supply to RC PNL1 remote panel 1.

_____ e. BACK OFF 3SSP–PCV80, nitrogen pressure regulator, fully counterclockwise.

_____ f. PUSH "POWER ON" button to de–energize panel.

_____ g. PLACE and LOCK cover on panel.

_____ 4.20.8 NOTIFY MCRO that you will be returning control of 3SSP*CTV7 and 3SSP*CTV8 to the control room and that will clear an alarm on Main Board 1.

4.20.9 At 3SSP*PNL3, post accident sample panel, PERFORM the following:

- CLOSE 3SSP*CTV8, "PASS SAMPLE VV." _____
- PLACE 3SSP*CTV 7.8, "PASS SAMPLE VV 7&8 TRANSFER SWITCH," in "REMOTE." _____
- IF PASS system effluent was directed to containment drains sump, CLOSE 3SSP*SOV3, "CTMT RECIRC SUMP SMPL" _____
- IF PASS system effluent was directed to volume control tank, CLOSE 3SSP*SOV5, "VCT SAMPLE" _____

_____ 4.20.10 CLOSE 3HVR–DMP1300, 3SSP–SAS1 exhaust damper [Ref. 6.1].

_____ 4.20.11 Using damper operating tool, CLOSE 3HVR*DMP60, 3SSP–SAS1/SAS2 exhaust isolation damper [Ref. 6.1].

_____ 4.20.12 CLOSE and LOCK 3SSP*V14, PASS return isolation ctmt penetration (Z 120).

NOTE

If a RCS sample was collected, 3SSP–V35 was opened 3 turns in step 4.1.29.

_____ 4.20.13 IF 3SSP–V35, ctmt to sample system isolation, was opened in step 4.1.29, OBSERVE caution sign next to 3SSP–V35 and CLOSE 3SSP–V35, ctmt to sample system isolation.

NOTE

3SWP*V839 and 3SWP*V842 are located in the northwest corner of the hydrogen recombiner building on the 38′ level.

_____ 4.20.14 CLOSE and LOCK 3SWP*V839, PA sample cooler SCL3 service water inlet.

_____ 4.20.15 CLOSE and LOCK 3SWP*V842, PA sample cooler SCL3 service water outlet.

N/A 4.20.16 ~~Refer To "Total Flush Volume" section on Chem Form 3804K–1 and CALCULATE flush volume.~~ ①

4.20.17 IF oxygen sensor was installed, REMOVE oxygen sensor as follows:

_____ a. CLOSE the following valves:

- 3SSP–V187, O2 analyzer AE61 outlet isolation valve
- 3SSP–V190, O2 analyzer AE61 inlet isolation valve

_____ b. ROTATE 3SSP–V186, 3–way divert to O2 analyzer AE61, to "BYPASS O2 ANALYZER" position.

_____ c. SET oxygen meter "ON/OFF" switch to "OFF."

_____ d. DISCONNECT sensor cord from back of dissolved oxygen meter.

_____ e. REMOVE sensor collar.

_____ f. REMOVE oxygen sensor from flow chamber.

_____ g. PLACE dust cover over flow chamber.

_____ 4.20.18 Refer To Chem Form 3804K–2 and COMPLETE remainder of valve lineup.

_____ 4.20.19 Refer To Chem Form 3804K–2 and PERFORM independent verification of system lineup.

NOTE

When this step is completed, constant communications with the control room in Modes 1–4 is no longer required.

4.20.20 NOTIFY MCRO of the following:

- 3SSP*V14 is locked closed
- IF in operating Modes 1–4, NOTIFY MCRO that tracking requirements of Tech Spec surveillance 4.6.1.1.a for 3SSP*V14 are no longer required [Ref 6.1].
- 3HVR*DMP60 is closed
- IF in operating Modes 1–4, REQUEST MCRO exit LCO 3.6.6.2 for 3HVR*DMP60 [Ref. 6.1].
- PASS system is secured.
- 3SSP*CTV 7.8, "PASS SAMPLE VV 7&8 TRANSFER SWITCH," is in "REMOTE"
- PASS reactor coolant sample cooler is isolated from service water.
- ~~IF PASS system effluent was directed to containment drains sump, REPORT volume added to sump.~~ ①

4.20.21 REMOVE pH probe as follows:

a. REMOVE pH probe cable.

b. PLACE pH housing socket over collar.

c. Using spanner wrench, HOLD pH probe to prevent rotation while removing collar.

d. Using pH housing socket, LOOSEN and REMOVE collar.

e. REMOVE pH probe from sensor housing.

f. RINSE probe with DI water and PLACE in storage solution.

_____ 4.20.22 RETURN valve key to MCRO.

_____ 4.20.23 SUBMIT completed Chem Form 3804K–2 to Chemistry Supervision for review.

4.20.24 PERFORM the following:

- _____ RECORD number of needle punctures for the liquid and gas septums in PASS log
- _____ IF any septum has been punctured 20 times or more since its last replacement, Refer To Attachment 5 and REPLACE septum
- _____ Refer To Attachment 6 and INVENTORY PASS sampling equipment

– End of Section 4.20 –

5. REVIEW AND SIGNOFF

5.1 The review and signoff for this procedure is located in the following attachments and forms:

- Attachment 3
- Attachment 4
- Attachment 5
- Attachment 6
- Chem Form 3804K–1
- Chem Form 3804K–2

6. REFERENCES

6.1 PIR 3–93–021, "SLCRS Boundary Breach"

6.2 Handbook of Chemistry and Physics, CRC Press

6.3 Technical Manual for Reactor Coolant Post Accident Sample System," General Dynamics Corporation, Electric Boat Division, Reactor Plant Services

6.4 Post Accident Sample System Component Instruction Literature

6.5 PDCR MP3–92–035, "Post Accident Sample System Piping Modifications"

6.6 DCR M3–97119, "Relocation of the Post Accident Sampling Drain"

6.7 INPO Good Practice CT–707, "Post–Accident Sampling Preparedness"

6.8 Correspondence B11121, "Millstone Nuclear Power Station, Unit No. 3, Response to Chemical Engineering Branch DSER Open Item," dated April 9, 1984, from Northeast Utilities to the NRC

6.9 Correspondence B11177, "Millstone Nuclear Power Station, Unit No. 3, Response to Chemical Engineering Branch DSER Open Item," dated May 10, 1984, from Northeast Utilities to the NRC

6.10 NUREG–1031, "Safety Evaluation report related to the operation of Millstone Nuclear Power Station, Unit No. 3," dated August 2, 1984.

6.11 Northeast Utilities Service Co. DWG. No. 25212–29039

6.12 S&W DWG. No. 12179–CI–RCS–LP3

6.13 S&W DWG. No. 12179–CP–396703

6.14 S&W DWG. No. 12179–CP–396705

6.15 S&W DWG. No. 12179–CP–396713

6.16 S&W DWG. No. 12179–CP–396734

6.17 S&W DWG. No. 12179–CP–396750

6.18 S&W DWG. No. 12179–CP–396751

6.19 S&W DWG. No. 12179–CP–396754

6.20 S&W DWG. No. 12179–CP–396771

6.21 S&W DWG. No. 12179–CP–396772

6.22 S&W DWG. No. 12179–CP–396773

6.23 S&W DWG. No. 12179–CP–396774

6.24 S&W DWG. No. 12179–CP–396775

6.25 S&W DWG. No. 12179–CP–396776

6.26 S&W DWG. No. 12179–CP–396777

6.27 S&W DWG. No. 12179–CP–396778

6.28 S&W DWG. No. 12179–CP–396779

6.29 S&W DWG. No. 12179–CP–396780

6.30 S&W DWG. No. 12179–CP–396781

6.31 S&W DWG. No. 12179–CP–396789

6.32 S&W DWG. No. 12179–CP–402055

6.33 S&W DWG. No. 12179–CP–402057

6.34 S&W DWG. No. 12179–CP–402059

6.35 S&W DWG. No. 12179–CP–402701

6.36 S&W DWG. No. 12179–CP–408001

6.37 S&W DWG. No. 12179–CP–408002

6.38 S&W DWG. No. 12179–CP–408003

6.39 S&W DWG. No. 12179–CP–408004

6.40 S&W DWG. No. 12179–EM–102A

6.41 S&W DWG. No. 12179–EM–102B

6.42 S&W DWG. No. 12179–EM–102D

6.43 S&W DWG. No. 12179–EM–102F

6.44 S&W DWG. No. 12179–EM–144B

6.45 S&W DWG. No. 12179–EM–155A

6.46 S&W DWG. No. 12179–EM–155B

6.47 S&W DWG. No. 12179–EP–121A

6.48 S&W DWG. No. 12179–EV–IA

6.49 S&W DWG. No. 12179–EV–IM

6.50 SPROC EN98–3–10, "PASS Operability Test for Total Dissolved Gas Detection."

6.51 DCR M3–98034, "Setpoint Change to 3GSN–PCV106, 3SSP–PCV80, and 3SSP–PCV82"

6.52 DCN DM3–00–0638–98, "Setpoint Change to 3GSN–PCV106, 3SSP–PCV80, and 3SSP–PCV82"

6.53 Technical Paper, "Temperature – Another Wild Card in pH Control," submitted by TBI–Bailey

6.54 ATI Orion PerpHecT Meter Line Instruction Manual Models 310, 330, 370, Copyright 1994 Analytical Technology

6.55 NRC, B18443, Dated July 31, 2001 | ②

7. SUMMARY OF CHANGES

7.1 Incorporated the following previously approved changes to Revision 1:

Summary of Changes – Revision 1, Change 1

- Changed 3SSP–PCV80 setpoint to 90–95 psig IAW DCR M3–98034 and DCN DM3–00–0638–98.
- Changed maximum nitrogen pressure caution to 100 psig IAW DCR M3–98034 and DCN DM3–00–0638–98.

7.2 Delete steps to verify flow at 3SSP–PNL1.

7.3 Added step to record pH sample temperature and to temperature compensate the pH reading.

7.4 Changed 240 psig to 255 psia in applicability section.

7.5 Added valve wrench to tools and consumables and inventory.

Summary of Changes Rev. 002–02

7.6 Editorial Correction; Added Reference 6.55 NRC commitment letter. B18443. AR #01005693–01.

7.7 Added note that a review by the Nuclear Fuels Safety Analysis is required whenever modifications to this procedure may impact dose limit time and motion study calculations. AR# 99005798–06.

Attachment 1
Vapor Pressure of Water vs. Temperature
(Sheet 1 of 2)

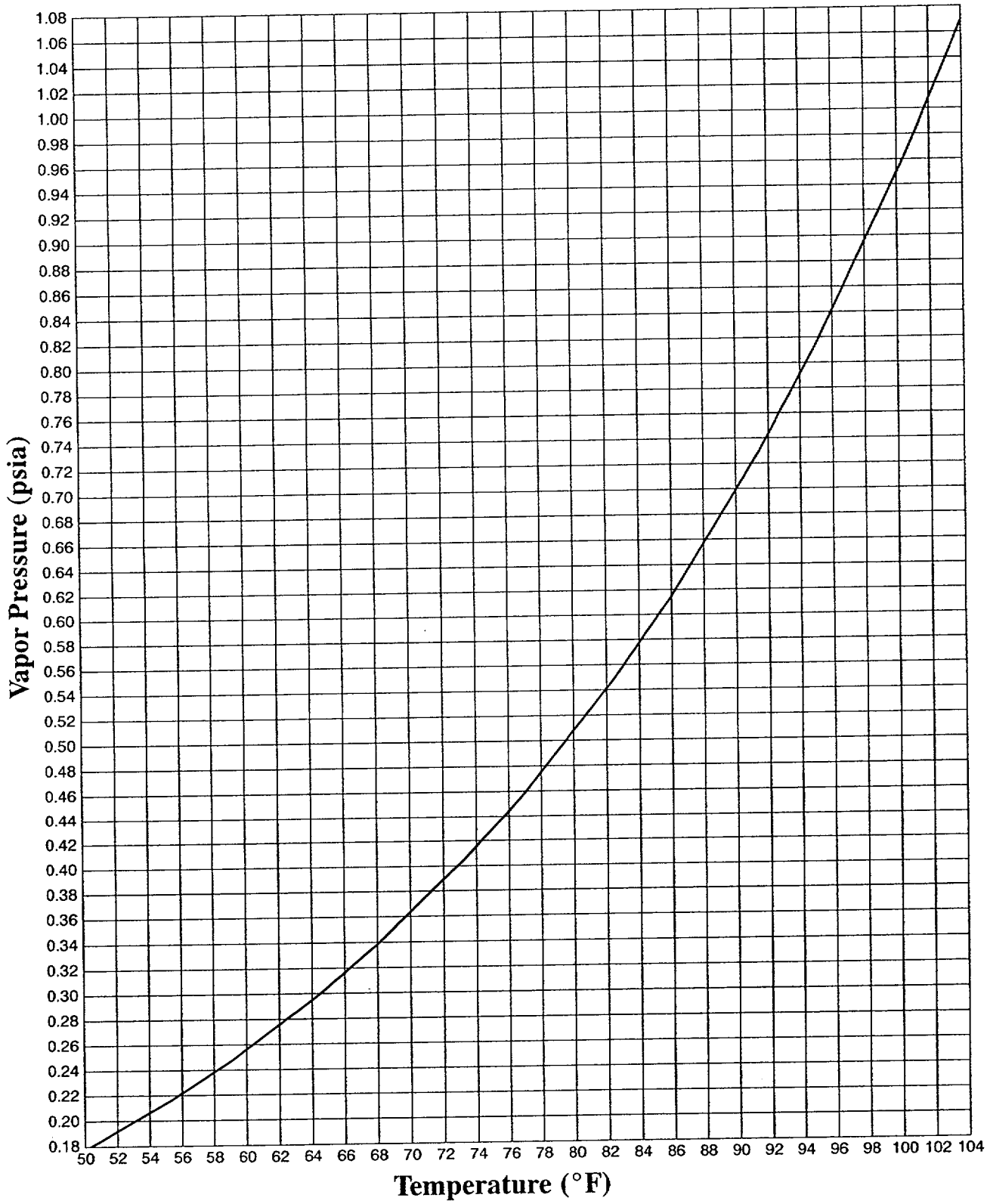

Level of Use
Continuous

STOP THINK ACT REVIEW

Attachment 1
Vapor Pressure of Water vs. Temperature
(Sheet 2 of 2)

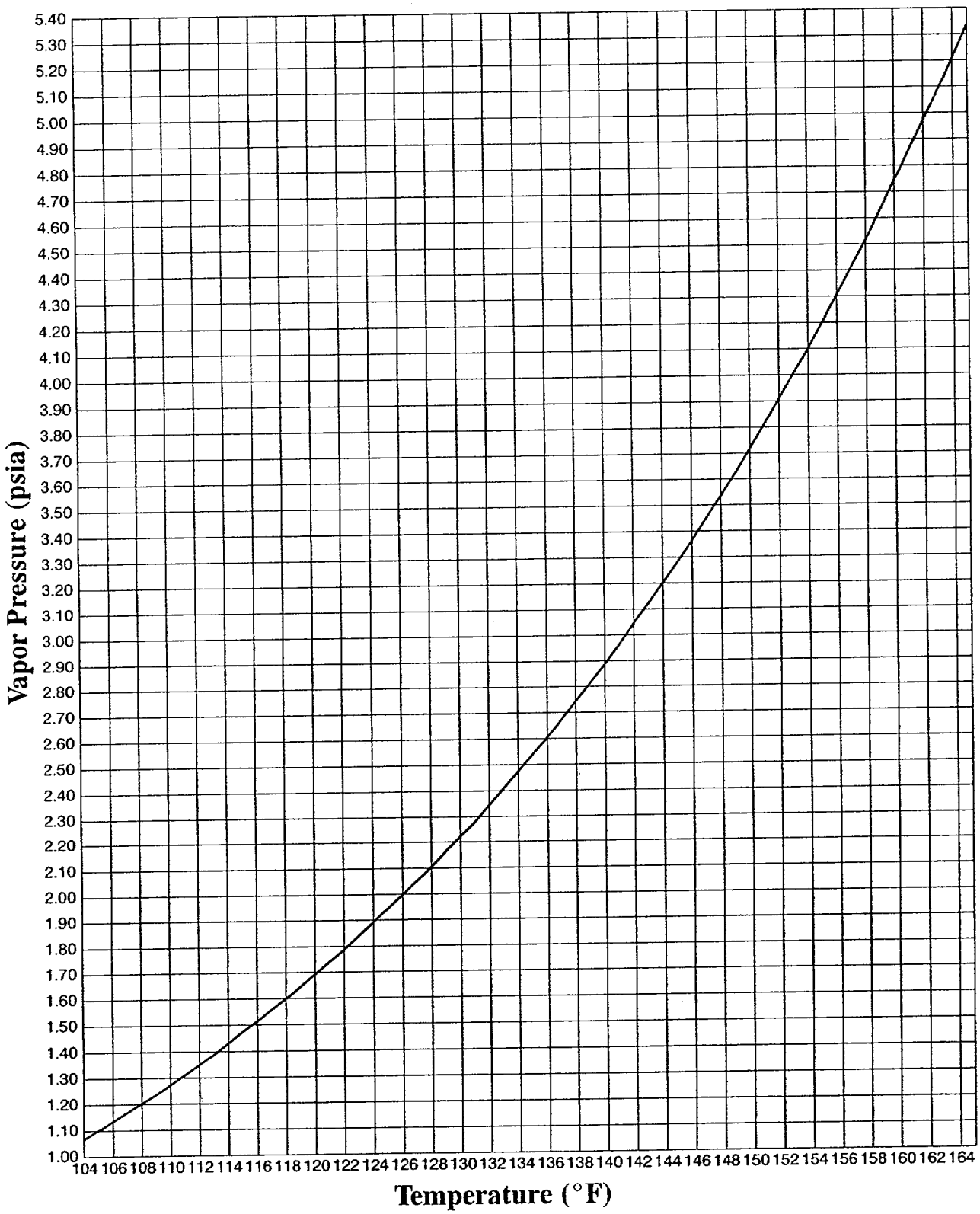

Attachment 2
Sample Dilution Data Sheet
(Sheet 1 of 1)

NOTE

Circle the appropriate sample bottle dilution corresponding to the dilution(s) required during performance of step. The sample mass is determined by multiplying the degas liquid sample mass (M_{dl}) by the applicable correction for the sample dilution that is being counted.

Sample Dilution	Degas Liquid Sample Mass (gm)	
Isotopic Original	M_{dl} = _____ gm (page 56, step 4.14.1 e.)	
1st Dilution	M_{dl} • 1.0E−01 = _____	• 1.0E−01 = _____ gm
2nd Dilution	M_{dl} • 1.0E−04 = _____	• 1.0E−04 = _____ gm
3rd Dilution	M_{dl} • 1.0E−07 = _____	• 1.0E−07 = _____ gm
4th Dilution	M_{dl} • 1.0E−10 = _____	• 1.0E−10 = _____ gm
5th Dilution	M_{dl} • 1.0E−13 = _____	• 1.0E−13 = _____ gm
6th Dilution	M_{dl} • 1.0E−16 = _____	• 1.0E−16 = _____ gm
7th Dilution	M_{dl} • 1.0E−19 = _____	• 1.0E−19 = _____ gm

Attachment 3
Degas Liquid Activity Worksheet

(Sheet 1 of 1)

Printout Activity − *Background* = *Isotope Activity*

Isotope	Printout Activity (2−place accuracy) (μCi/gm)	Background (μCi/gm)	Isotope Activity (2−place accuracy) (μCi/gm)
		Degas Liquid Activity (2−place accuracy) (μCi/gm)	

NOTE: Degas Liquid Activity = summation of all isotope activities.

Prepared by: ____________________ Date: __________

SUBMIT completed attachment to Chemistry Supervision.

Attachment 4
Gas Activity Worksheet
(Sheet 1 of 1)

Printout Activity – *Background* = *Isotope Activity*

Isotope	Printout Activity (2–place accuracy) (μCi/gm)	Background (μCi/gm)	Isotope Activity (2–place accuracy) (μCi/gm)
		Gas Activity (2–place accuracy) (μCi/gm)	

NOTE: Gas Activity = summation of all isotope activities.

Prepared by: _____ Date: _____

SUBMIT completed attachment to Chemistry Supervision.

Level of Use
Continuous

STOP THINK ACT REVIEW

Attachment 5
3SSP–SAS1 Septum Replacement
(Sheet 1 of 1)

_____ 1. PROCEED to 3SSP–SAS1 with the following:

- 3SSP–SAS1 septums
- 7/16″ socket
- 1/2″ socket
- Socket wrench
- Scribe
- Tweezers
- Septum insertion tool

_____ 2. Using 7/16″ socket, UNSCREW lockplate bolt and REMOVE lockplate.

_____ 3. Using 1/2″ socket, UNSCREW and REMOVE septum holder.

_____ 4. IF old septum did **not** come out with septum holder, REMOVE old septum using scribe or tweezers.

_____ 5. Using tweezers and septum insertion tool, INSTALL new septum.

_____ 6. Using 1/2″ socket wrench, INSTALL septum holder.

_____ 7. Using 7/16″ socket, INSTALL lockplate.

_____ 8. MARK which septum was replaced: ☐ Liquid septum ☐ Gas septum

_____ 9. RECORD septum replacement in PASS log.

Replaced by: _____ Date: _____

SUBMIT completed attachment to Chemistry Supervision.

Attachment 6
PASS Sample Equipment Inventory
(Sheet 1 of 2)

Description	Minimum Quantity	Check
Liquid PASS Suitcase		
14.4 ml gas vial	2	
14.4 ml gas vial stoppers (Sealed in bag to prevent dry rot)	2	
250 µl syringe labeled "LIQUID ISOTOPIC/BORON"	2	
250 µl syringe labeled "GAS ISOTOPIC"	2	
2.0 ml syringe labeled "CHLORIDES"	2	
2.0 ml syringe labeled "GAS COMP"	2	
Spare syringe needles	2	
Oxygen sensor	1	
Oxygen sensor extension cord	1	
Oxygen analyzer	1	
Unit 3 Chemistry Lab		
Lead bricks	36	
Damper operating tool	1	
PASS transport cart	1	
Syringe transfer container	1	
Unit 3 Chemistry Makeup Cage		
2 ml grab sample chamber	1	
2 ml grab sample chamber transfer container	1	

Attachment 6
PASS Sample Equipment Inventory
(Sheet 2 of 2)

Unit 3 Chemistry Lab PASS Drawer/Cabinet		
1–liter bottles	7	
1.0 ml pipet	1	
Rubber squeeze bulbs	1	
3SSP–SAS1 septums	4	
Scribe	1	
Tweezers	1	
Septum insertion tool	1	
Plastic bags (for 1 liter bottles)	6	
Plastic wrap	Roll	
Spanner wrench	1	
Socket wrench	1	
7/16″ socket	1	
1/2″ socket	1	
11/16″ wrench or adjustable wrench	1	
pH housing socket	1	
Collection bottle for venting pH probe housing	1	
20 ml sample bottle labeled "ISOTOPIC ORIGINAL"	1	
Tongs	1	
PASS pH probe	1	
IC sample test tubes	1	
Lead brick containing drilled hole for IC sample	1	
ICP waste bottle	1	
Lead brick for ICP sample and waste bottle	1	
IC regenerant bottle	1	
IC eluent bottle	1	
IC 250 µl loop	1	
IC AMMS	1	
IC carbo pack	1	
IC PA1 guard column	1	
GC 0.1 cc loop	1	
GC injection septum	1	
Phone headset	1	
Valve wrench	1	

Completed By: _____ Date: _____

SUBMIT completed attachment to Chemistry Supervision.

Attachment 7
Liquid PASS Simplified Drawing
(Sheet 1 of 1)

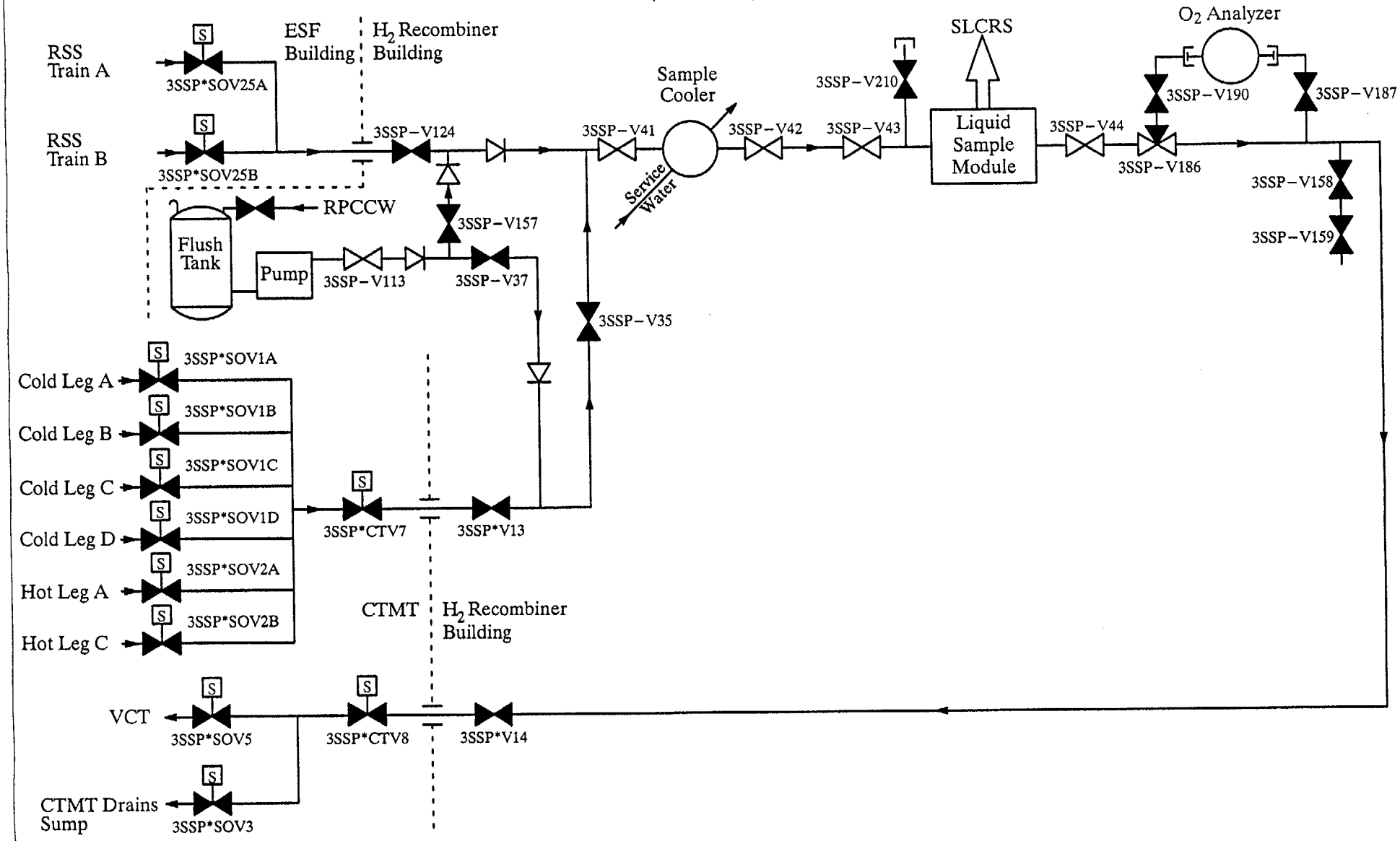

Level of Use
Continuous

STOP THINK ACT REVIEW

Attachment 8
Henry's Constants vs. Temperature
(Sheet 1 of 1)

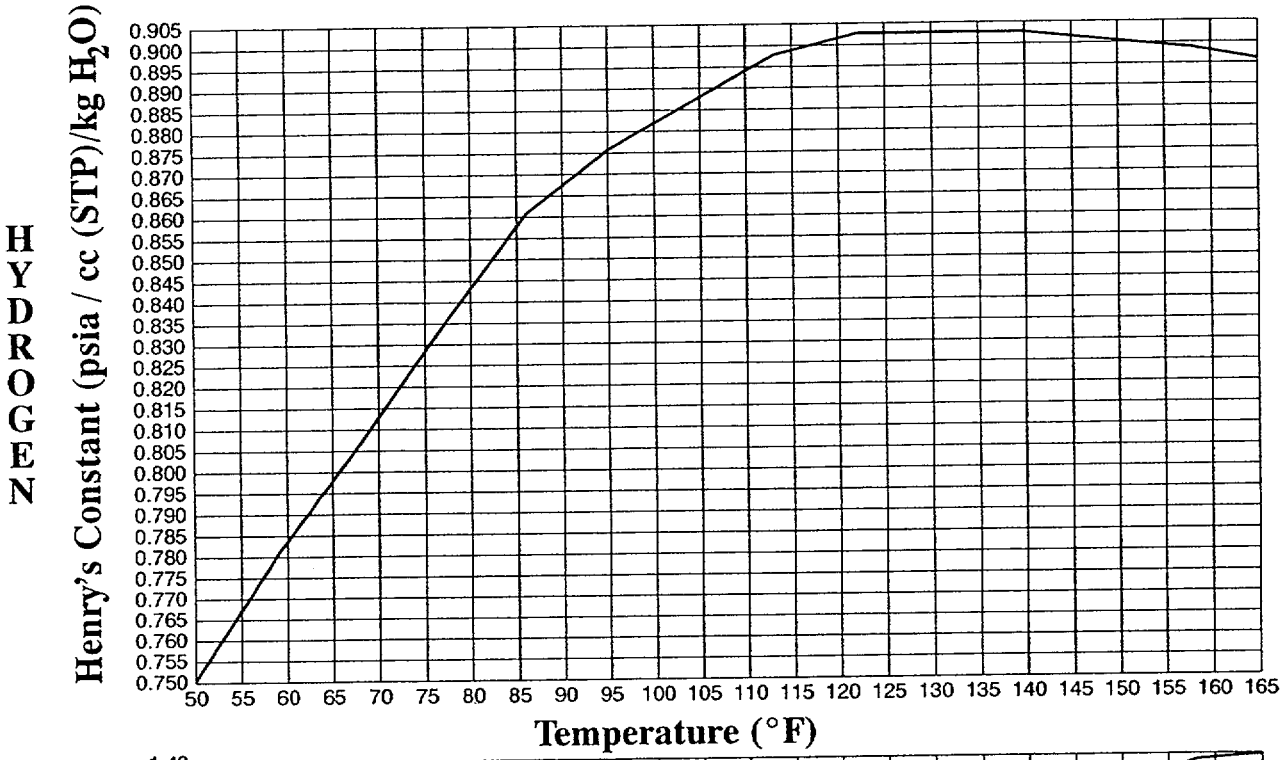

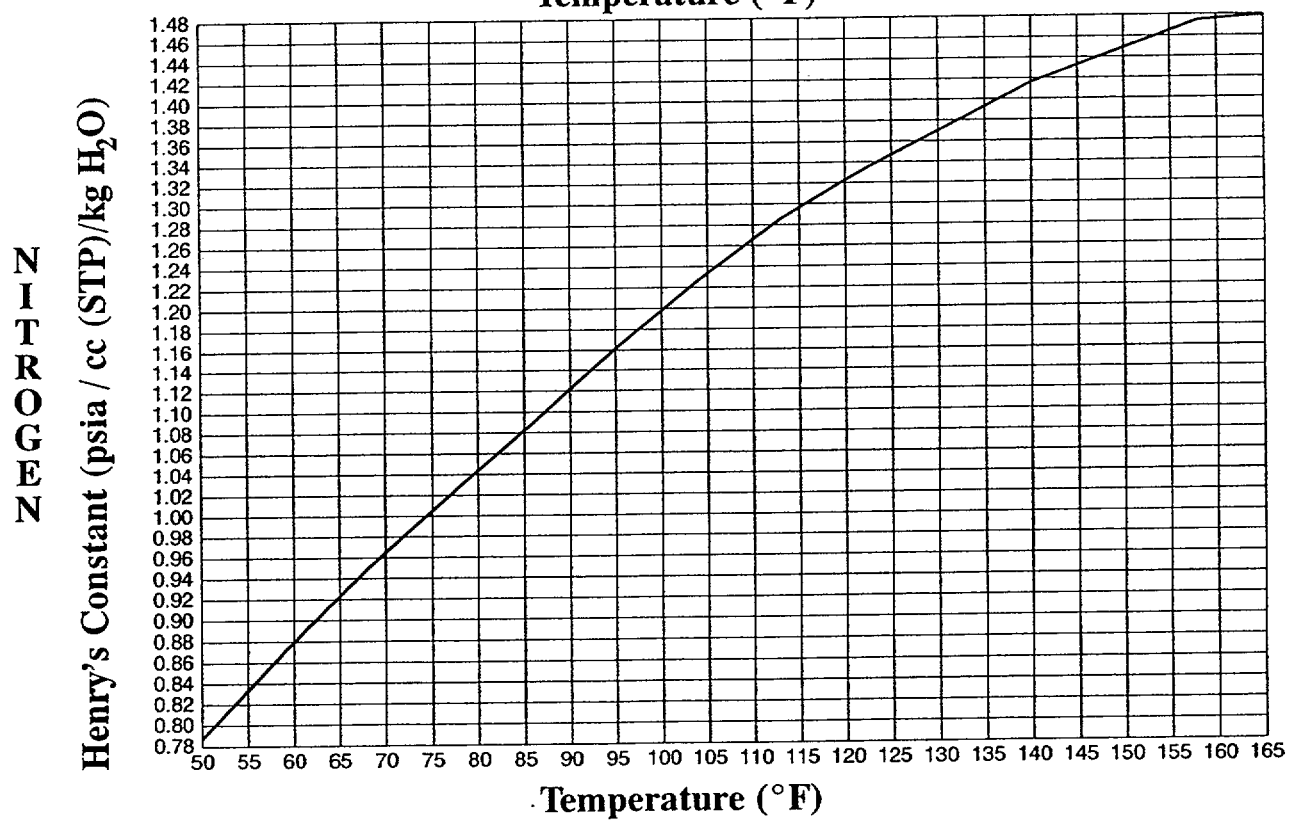

Attachment 9
pH Temperature Compensation
(Sheet 1 of 1)

Temperature (°F)	pH				
	5	6	7	8	9
60	−0.05	−0.03	0	−0.03	−0.05
62	−0.04	−0.02	0	−0.02	−0.04
64	−0.03	−0.02	0	−0.02	−0.03
66	−0.03	−0.02	0	−0.02	−0.03
68	−0.02	−0.01	0	−0.01	−0.02
70	−0.01	−0.01	0	−0.01	−0.01
72	−0.01	−0.01	0	−0.01	−0.01
74	0.00	0.00	0	0.00	0.00
76	0.01	0.00	0	0.00	0.01
78	0.01	0.01	0	0.01	0.01
80	0.02	0.01	0	0.01	0.02
82	0.03	0.01	0	0.01	0.03
84	0.03	0.02	0	0.02	0.03
86	0.04	0.02	0	0.02	0.04
88	0.05	0.02	0	0.02	0.05
90	0.05	0.03	0	0.03	0.05
92	0.06	0.03	0	0.03	0.06
94	0.07	0.03	0	0.03	0.07
96	0.08	0.04	0	0.04	0.08
98	0.08	0.04	0	0.04	0.08
100	0.09	0.04	0	0.04	0.09
102	0.10	0.05	0	0.05	0.10
104	0.10	0.05	0	0.05	0.10
106	0.11	0.06	0	0.06	0.11
108	0.12	0.06	0	0.06	0.12
110	0.12	0.06	0	0.06	0.12
112	0.13	0.07	0	0.07	0.13
114	0.14	0.07	0	0.07	0.14
116	0.14	0.07	0	0.07	0.14
118	0.15	0.08	0	0.08	0.15
120	0.16	0.08	0	0.08	0.16

08/22/01
Approval Date

08/23/01
Effective Date

Document Action Request

SPG # 020123-190942

A

Initiated By: Nileen Drzewianowski Date: 01/24/2002 Department SPG Ext 5139

Document No: CP 3804L Rev. No: 002 Minor Rev No. 01

Title: **PASS Containment Air Sample**

B

Reason for Request (attach commitments,CR's,AR's,etc)

Editorial Correction AR# 01005693-01 Added NRC Commitment reference

Continued

C

Select One See MP-05-DC-SAP01 sect 2.3 to determine type of change

☐ Intent Change (SQR Independent, RCD, ENV Screen Required (Other reviews may be required. See MP-05-DC-FAP 01.1 Att 3 ☑ Edit Corr ☐ Non-Intent Change (Only SQR Independent Review and Env. screen Required)

D

Editorial Correction Approval

Plant Mngt Staff Member - Approval / Date 11/28/02

TPC Interim Approval

(1) Plant Mngt Staff Member Print/Sign/Date /

(2) SM/SRO/CFH on Unit Print/Sign/Date /

E

Procedure Request/Feedback Disposition

Priority: ☑ Perform Now ☐ Perform Later - See Comments

Activity: ☐ Revision ☑ Minor Revision (See DC-GDL01 for guidance) ☐ Cleanup Rev ☐ Biennial Review ☐ Cancellation ☐ Supercedure

☐ TPC ☐ OTC ☐ Place in Void

F

Reviews continued ☐	Print	Sign	Date	SQR Qualified Yes	SQR Qualified No	SQR Qualified Dept.	✓ If Comments
☐				☐	☐		☐
☐				☐	☐		☐
☐				☐	☐		☐
☐				☐	☐		☐
☐				☐	☐		☐
Licensing Basis ☐	N/A	N/A	N/A	☐	☐	N/A	☐
Independent ☐	N/A	N/A	N/A	☐	☐	N/A	☐

G

An NRRL update was required ? ☐ Yes

H

1. ☑ **SQR Program Final Review and Appproval**

Approval ☐ Disapproval ☐

N/A /
SQR Qualified Independent Reviewer / Date

N/A
Department Head/Responsible Individual

N/A
Approval Date

2. ☐ **SORC** ☑ **RI/DH Final Review and Approval**

N/A
Department Head/Responsible Individual Sign

Meeting No. N/A

N/A
SORC Approval Signature

N/A
Approval Date

I

Effective Date 01/30/02

MILLSTONE NUCLEAR POWER STATION
CHEMISTRY PROCEDURE

STOP THINK ACT REVIEW

PASS Containment Air Sample
[✤Ref. 6.28]

CP 3804L

Rev. 002–01

NOTE

A review by the Emergency Planning Department is required whenever this procedure is revised or whenever changes are made to this procedure which impact the ability to collect and analyze a PASS sample.

A review by the Nuclear Fuels Safety Analysis is required whenever modifications to this procedure may impact dose limit time and motion study calculations.

Approval Date: 01/28/02

Effective Date: 01/30/02

Level of Use
Continuous

PASS Containment Air Sample

TABLE OF CONTENTS

1. PURPOSE

1.1 Objective

Provide instructions for operation of the Unit 3 containment air post accident sample system for containment air sample acquisition during Station Emergency Response Organization (SERO) activation when high radioactivity levels, due to an accident, may preclude the normal (conventional) sampling method.

This procedure satisfies requirements identified in Unit 3 Technical Specifications 6.8.1, 6.8.4 d, 6.8.4.e and the Millstone Nuclear Power Station Emergency Plan.

This procedure was developed using the reactor technical manual for the containment air PASS (Ref.6.2) and other documents identified herein.

1.2 Discussion

The time required to collect and analyze samples should be 3 hours or less from the time the ADTS makes the decision to obtain a sample using PASS.

If conditions arise that will not allow Sections 4.1 through 4.4 to be completed, the procedure user will be directed to Section 4.8, "Restoration from PASS Sample Acquisition," to return the system to normal.

Attachment 4 contains a simplified drawing of the containment air post accident sample system.

1.3 Applicability

This procedure is applicable during SERO activation when in–plant radioactivity levels are too high to permit containment air sampling via the normal (conventional) method.

1.4 Frequency

Performance of this procedure may be repeated periodically during SERO activation.

2. PREREQUISITES

2.1 General

___/___ 2.1.1 SERO is activated.

___/___ 2.1.2 Heat tracing panel 3HTS–PNLA3 (OP 3352) has been energized for at least 1/2 hour.

___/___ 2.1.3 Key has been obtained to unlock the following:

Train A	Train B
3SSP*V51	3SSP*V52
3SSP*V59	3SSP*V60
3HCS*V2	3HCS*V9
3HCS*V3	3HCS*V10
3HCS*V6	3HCS*V13

___/___ 2.1.4 Health Physics has been notified that a containment air PASS sample will be taken.

___/___ 2.1.5 Health Physics has evaluated need for RWP.

___/___ 2.1.6 Lab ventilation is operating.

___/___ 2.1.7 Lead brick shielding has been placed in lab ventilation hood.

___/___ 2.1.8 Computer radioisotopic analysis system in operation and calibrated.

___/___ 2.1.9 Gas chromatograph has been set up and calibrated or calibration has been initiated for PASS containment air sample analysis.

___/___ 2.1.10 Proper operation of sample syringes in PASS suitcase has been verified.

___/___ 2.1.11 14.4 cc gas vial has been stoppered and evacuated.

___/___ 2.1.12 One train of SLCRS in operation.

_____/_____ 2.1.13 Manager of Radiological Dose Assessment (MRDA) or the Assistant Manager of Radiological Dose Assessment (AMRDA) has requested a containment air sample to include the following:

Check Requested Analysis	Sample Equipment Needed
❑ Gas isotopic	"GAS ISOTOPIC" syringe, stoppered and evacuated 14.4 cc gas vial
❑ Gas composition	"GAS COMP" syringe

Check Sample Point

❑ Hydrogen Recombiner Train A

❑ Hydrogen Recombiner Train B

2.1.14 Containment Air PASS Team has completed pre–job brief as follows:

_____/_____
- Manager of Operational Support Center (MOSC) – designates, assembles, and briefs the Containment Air PASS Team for implementation of this procedure

_____/_____
- Operational Support Center Assistant Radiological Protection Supervisor (OSC ARPS) with the concurrence of the Manager of Radiological Consequence Assessment (MRCA) – specifies the radiological controls required for implementation of this procedure

2.2 Documents

2.2.1 CP 801/2801/3801AD, "Gas Chromatograph Operation and Calibration"

2.2.2 CP 801/2801/3801AT, "Gamma Spectroscopy Counting System Maintenance and Operation"

2.2.3 CP 3804K (Att), "PASS Sample Equipment Inventory"

2.2.4 MP–16–CAP–SAP01, "Condition Report Initiation"

2.2.5 RP16, "Trouble Reporting"

2.2.6 RWP for PASS sample collection.

2.2.7 Gas sample isotopic printout

2.3 Personnel

2.3.1 Assistant Director, Technical Support (ADTS)

2.3.2 Manager of Radiological Dose Assessment (MRDA) or Assistant Manager of Radiological Dose Assessment (AMRDA)

2.3.3 Manager of Operational Support Center (MOSC)

2.3.4 Operational Support Center Assistant Radiological Protection Supervisor (OSC ARPS)

2.3.5 Manager of Control Room Operations (MCRO)

2.3.6 Manager of Radiological Consequence Assessment (MRCA)

2.3.7 Containment Air PASS Team consisting of the following personnel:

- At least two Chemistry Technicians
- At least one Health Physics Technician

2.4 Tools and Consumables

2.4.1 Located in Unit 3 Chemistry Lab

- 14.4 cc gas vial
- 14.4 cc gas vial stopper
- 24 Lead bricks
- PASS transport cart
- Syringe transfer container
- 250 µl syringe labeled "GAS ISOTOPIC"
- 2.0 ml syringe labeled "GAS COMP"
- Key to 3SSP–PNL2 (Issued to U3 Chemistry personnel)
- Key to the following valves:

Train A	Train B
3SSP*V51	3SSP*V52
3SSP*V59	3SSP*V60
3HCS*V2	3HCS*V9
3HCS*V3	3HCS*V10
3HCS*V6	3HCS*V13

- Watch

2.4.2 Located in PASS Cabinet in H_2 Recombiner Building

- Spare syringe needles
- 3SSP–SAS2 septums
- 1/2″ socket wrench
- Phone headset
- Scribe
- Tweezers
- Septum insertion tool
- Calculator
- Damper operating tool
- Flat–tipped screwdriver
- Valve wrench

2.5 Responsibilities

2.5.1 The ADTS shall make the decision to obtain a sample using PASS.

2.5.2 The Manager of Operational Support Center designates, assembles and briefs the PASS team.

2.5.3 The Manager of Radiological Consequence Assessment specifies PASS team radiological controls.

2.5.4 The Operational Support Center Assistant Radiological Protection Supervisor assigns HP technicians and briefs the PASS team on radiological conditions.

2.5.5 The Manager of Radiological Dose Assessment or the Assistant Manager of Radiological Dose Assessment specify PASS team sampling and analysis requirements.

2.6 **Definitions**

2.6.1 SLCRS – supplementary leak collection and release system

2.6.2 CR – Condition Report

3. PRECAUTIONS

3.1 The inside of 3SSP–SAS2, containment air sample module, is potentially contaminated. Proper Health Physics practices and RWP requirements must be followed to prevent the spread of contamination.

3.2 Nitrogen pressures >100 psig can damage the tubing in 3SSP–PNL2.

4. INSTRUCTIONS

4.1 Preparation for PASS Sample Acquisition

4.1.1 PERFORM the following and INITIAL CP 3804L–001:

- VERIFY "General Prerequisites" have been completed
- REVIEW Section 3, "Precautions"

4.1.2 IF during performance of Sections 4.1 through 4.8 any operational problems are encountered, RECORD noted problems on CP 3804L–001.

4.1.3 IF during performance of Sections 4.1 through 4.4, operational problems are encountered that will **not** allow sampling to be completed, Go To Section 4.8, "Restoration from PASS Sample Acquisition."

4.1.4 PROCEED to containment air sample module with the following:

- Stoppered and evacuated 14.4 cc gas vial
- Key to 3SSP–PNL2 (Issued to U3 Chemistry personnel)
- Key to the following valves:

Train A	Train B
3SSP*V51	3SSP*V52
3SSP*V59	3SSP*V60
3HCS*V2	3HCS*V9
3HCS*V3	3HCS*V10
3HCS*V6	3HCS*V13

- Watch
- CP 3804L–001 and CP 3804L–002
- Syringe transfer container

4.1.5 UNLOCK 3SSP–PNL2, containment air sample remote panel.

4.1.6 Refer To Attachment 1 and CHECK system alignment.

4.1.7 NOTIFY MCRO of the following:

a. 3HVR*DMP60 will be opened

b. IF in operating Modes 1–4, Enter LCO 3.6.6.2 for 3HVR*DMP60 [Ref. 6.1]

c. PERFORM one of the following:

1) IF hydrogen recombiner train A was selected in step 2.1.13, NOTIFY MCRO that the following valves will be opened if not already open:

- 3HCS*V2, recombiner 1A supply outer isolation
- 3HCS*V3, recombiner 1A supply inner isolation
- 3HCS*V6, recombiner RBNR–1A return isolation

2) IF hydrogen recombiner train B was selected in step 2.1.13, NOTIFY MCRO that the following valves will be opened if not already open:

- 3HCS*V9, recombiner 1B supply outer isolation
- 3HCS*V10, recombiner 1B supply inner isolation
- 3HCS*V13, recombiner RBNR–1B return isolation

d. IF in operating Modes 1–4, Track Tech Spec surveillance requirements of 4.6.1.1.a for the valves opened in step 4.1.7 c.

NOTE

Constant communications with the control room are required when 3HCS*V2, 3HCS*V3, 3HCS*V6, 3HCS*V9, 3HCS*V10, or 3HCS*V13 are opened in Modes 1–4.

4.1.8 IF in operating Modes 1–4, DON phone headset and ESTABLISH communications with Control Room.

4.1.9 PERFORM the following:

a. Using damper operating tool, OPEN 3HVR*DMP60, 3SSP–SAS1/SAS2 exhaust isolation damper [Ref. 6.1]

b. OPEN 3HVR–DMP1301, 3SSP–SAS2 exhaust damper [Ref. 6.1].

4.1.10 PERFORM the following at 3SSP–PNL2, containment air sample remote panel:

_____ a. ZERO timer.

_____ b. PUSH and HOLD "POWER ON" button for 1 to 2 seconds to energize remote operating module and RECORD time:

_____

NOTE

A lit fuse indicator light indicates the fuse is blown.

_____ c. VERIFY line fuses and blower fuse indicator lights are **not** lit.

_____ d. OPEN 3SSP–V53, nitrogen supply to containment air sample PNL2.

NOTE

3SSP–PCV82 may require periodic adjustment to maintain 45–50 psig outlet pressure.

CAUTION

Nitrogen pressures >100 psig can damage the tubing in 3SSP–PNL2.

_____ e. ADJUST 3SSP–PCV82, nitrogen pressure regulator, to 45–50 psig.

ALARA

The inside of 3SSP–SAS2, containment air sample module, is potentially contaminated. Proper Health Physics practices and RWP requirements must be followed to prevent the spread of contamination.

_____ 4.1.11 At 3SSP–SAS2, containment air sample module, CHECK exhaust fan is running.

4.1.12 IF exhaust fan is **not** running, PERFORM the following at 3SSP–PNL2, containment air sample remote panel:

_____ a. PUSH "POWER ON" button to de–energize panel.

_____ b. PUSH and HOLD "POWER ON" button for 1 to 2 seconds to energize remote operating module and RECORD time:

_____

_____ c. At 3SSP–SAS2, containment air sample module, CHECK exhaust fan is running.

_____ d. IF exhaust fan is **not** running, NOTIFY MOSC.

NOTE

If hydrogen recombiner train A is running, the following valves will already be open:

- 3HCS*V2, recombiner 1A supply outer isolation
- 3HCS*V3, recombiner 1A supply inner isolation
- 3HCS*V6, recombiner RBNR−1A return isolation

CAUTION

It is imperative **not** to push in on the hand wheel when operating the following valves unless SM/US permission is obtained. This engages the clutch override and could result in damage to the valve.

Train A			Train B		
3HCS*V2	3HCS*V6	3SSP*V59	3HCS*V9	3HCS*V13	3SSP*V60
3HCS*V3	3SSP*V51		3HCS*V10	3SSP*V52	

4.1.13 IF hydrogen recombiner train A was selected in step 2.1.13, UNLOCK and OPEN the following valves:

_____ • 3HCS*V2, recombiner 1A supply outer isolation

_____ • 3HCS*V3, recombiner 1A supply inner isolation

_____ • 3HCS*V6, recombiner RBNR−1A return isolation

_____ • 3SSP*V51, containment air sample return cross−connect

_____ • 3SSP*V59, containment air sample supply cross−connect

CAUTION

It is imperative **not** to push in on the hand wheel when operating the following valves unless SM/US permission is obtained. This engages the clutch override and could result in damage to the valve.

Train A			Train B		
3HCS*V2	3HCS*V6	3SSP*V59	3HCS*V9	3HCS*V13	3SSP*V60
3HCS*V3	3SSP*V51		3HCS*V10	3SSP*V52	

NOTE

If hydrogen recombiner train B is running, the following valves will already be open:

- 3HCS*V9, recombiner 1B supply outer isolation
- 3HCS*V10, recombiner 1B supply inner isolation
- 3HCS*V13, recombiner RBNR–1B return isolation

4.1.14 IF hydrogen recombiner train B was selected in step 2.1.13, UNLOCK and OPEN the following valves:

_____ • 3HCS*V9, recombiner 1B supply outer isolation

_____ • 3HCS*V10, recombiner 1B supply inner isolation

_____ • 3HCS*V13, recombiner RBNR–1B return isolation

_____ • 3SSP*V52, containment air sample return cross–connect

_____ • 3SSP*V60, containment air sample supply cross–connect

4.1.15 At 3SSP–PNL2, containment air sample remote panel, POSITION the following valves as indicated:

_____ a. 3SSP–V2037 to "OPEN."

_____ b. 3SSP–V2035 to "SAMPLE."

_____ c. 3SSP–V112 to "OFF."

_____ d. 3SSP–V2034 to "OFF."

ALARA

3SSP–PNL2, containment air sample remote panel, requires a 15 minute warm–up period. The time that the instrument was energized is recorded on Chem Form 3804L–1. The PASS Team Health Physics Technician will determine the best location to wait for the completion of the warm–up.

_____ 4.1.16 REQUEST Health Physics Technician determine most appropriate location to wait for completion of 15 minute warm–up of 3SSP–PNL2, containment air sample remote panel.

– End of Section 4.1 –

4.2 Sample Acquisition

_____ 4.2.1 Refer To step 4.1.10 b. or step 4.1.12 b. and VERIFY 15 minute warm–up of 3SSP–PNL2, containment air sample remote panel, is complete.

_____ 4.2.2 Refer To CP 3804L–001 and MARK box corresponding to hydrogen recombiner train being sampled.

_____ 4.2.3 At 3SSP–PNL2, containment air sample remote panel, POSITION 3SSP–V112 to "SAMPLE INFLUENT."

4.2.4 At 3SSP*PNL3, post accident sample panel, PERFORM the following:

_____ a. ROTATE "AIR SAMPLE PUMP P4 SPEED CONTROL" knob fully clockwise.

_____ b. PUSH "AIR SAMPLE PUMP P4" start button to start 3SSP–P4

_____ 4.2.5 RECORD time purge started: _____

_____ 4.2.6 At 3SSP–PNL2, containment air sample remote panel, RECORD flow rate: _____ lpm

_____ 4.2.7 PERFORM the following calculation to determine purge time in minutes.

Purge time = 220 / purge flow rate in lpm

Purge time = 220 / _____ lpm = _____ minutes

4.2.8 <u>WHEN</u> purge time has passed, ISOLATE sample as follows:

_____ a. At 3SSP*PNL3, post accident sample panel, ADJUST 3SSP–P4 speed control to achieve a sample flow rate of 10 to 12 lpm indicated on 3SSP–PNL2, containment air sample remote panel.

_____ b. At 3SSP–PNL2, containment air sample remote panel, RECORD flow rate: _____ lpm

_____ c. POSITION 3SSP–V2037 to "CLOSE."

_____ d. CHECK that flow rate is less than value recorded in step 4.2.8 b.

_____ e. WAIT 1 minute.

_____ f. POSITION 3SSP–V2035 to "BYPASS AND FLUSH."

_____ g. Refer To CP 3804L–001 and RECORD sample date and time.

_____ h. POSITION 3SSP–V112 to "OFF."

_____ 4.2.9 At 3SSP*PNL3, post accident sample panel, PUSH "AIR SAMPLE PUMP P4" stop button to stop 3SSP–P4.

– End of Section 4.2 –

4.3 System Flush Prior To Sample Retrieval

4.3.1 At 3SSP–PNL2, containment air sample remote panel, INITIATE nitrogen purge as follows:

a. POSITION the following valves as indicated:

_____ 1) 3SSP–V112 to "NITROGEN FLUSH."

_____ 2) 3SSP–V2037 to "OPEN."

_____ 3) 3SSP–V2034 to "ON."

_____ b. RECORD flow rate: _____ lpm

_____ c. WAIT 3 minutes.

_____ d. POSITION 3SSP–V2037 to "CLOSE."

_____ e. CHECK that flow rate is less than value recorded in step 4.3.1 b.

_____ f. WAIT 3 minutes.

g. POSITION the following valves as indicated:

_____ 1) 3SSP–V2034 to "OFF."

_____ 2) 3SSP–V112 to "OFF."

_____ 3) 3SSP–V2037 to "OPEN."

Health Physics Technician

4.3.2 Based on radiation reading in sample module room, DIRECT Chemistry Technicians to perform one of the following:

_____ • Go To step 4.3.1 and REPEAT flush

_____ • Go To Section 4.4 and retrieve samples

– End of Section 4.3 –

4.4 Retrieval of Containment Air Samples

4.4.1 At 3SSP–SAS2, containment air sample module, OPEN cabinet door.

4.4.2 IF gas isotopic sample was requested in step 2.1.13, PERFORM the following:

a. VERIFY needle is screwed fully into 250 µl syringe labeled "GAS ISOTOPIC."

NOTE

3SSP–V2036 is open when handle is inline with needle guide.

b. OPEN 3SSP–V2036, containment air sample module internal bypass valve.

c. INSERT syringe into needle guide until syringe nut is engaged.

ALARA

1. Do **not** unscrew syringe body more than 2 turns counterclockwise. Excessive turns will disengage needle from syringe.
2. Steps 4.4.2 d. through g. should be performed rapidly to minimize exposure.

d. Rapidly DRAW 250 µl gas sample into syringe and TURN syringe body 2 turns counterclockwise to lock sample in syringe.

e. REMOVE syringe from needle guide and INSERT needle into stoppered 14.4 cc gas vial.

f. HOLD syringe tip and TURN syringe body 2 turns clockwise to unlock syringe and INJECT contents of syringe into stoppered 14.4 cc gas vial.

g. PLACE syringe and gas vial into syringe transfer container and PLACE lid on syringe transfer container.

_____ h. CLOSE 3SSP–V2036, containment air sample module internal bypass valve.

4.4.3 IF gas composition sample was requested in step 2.1.13, PERFORM the following:

_____ a. VERIFY needle is screwed fully into 2.0 ml syringe labeled "GAS COMP."

_____ b. OPEN 3SSP–V2036, containment air sample module internal bypass valve.

_____ c. INSERT syringe into needle guide until syringe nut is engaged.

ALARA

1. Do **not** unscrew syringe body more than 2 turns counterclockwise. Excessive turns will disengage needle from syringe.
2. Steps 4.4.3 d. and e. should be performed rapidly to minimize exposure.

_____ d. Rapidly DRAW 1 cc gas sample into syringe and TURN syringe body 2 turns counterclockwise to lock sample in syringe.

_____ e. REMOVE syringe from needle guide and PLACE syringe into syringe transfer container and PLACE lid on syringe transfer container.

_____ f. CLOSE 3SSP–V2036, containment air sample module internal bypass valve.

_____ 4.4.4 CLOSE cabinet door.

NOTE

If sufficient personnel are available, Sections 4.5 and 4.8 may be performed simultaneously.

4.4.5 WHEN all samples requested in step 2.1.13 have been retrieved, PERFORM the following:

- TRANSPORT samples to laboratory and Go To Section 4.5, "Sample Analysis" _____
- Go To Section 4.8, "Restoration from PASS Sample Acquisition" _____

– End of Section 4.4 –

4.5 Sample Analysis

Health Physics Technician

4.5.1 DETERMINE handling requirements as follows:

_____ a. OPEN transport container cover and MEASURE dose rate.

_____ b. IF dose rate is greater than or equal to 1 rem/hr, NOTIFY OSC ARPS and REQUEST instructions for handling.

_____ c. IF dose rate is less than 1 rem/hr, DIRECT Chemistry Technicians to handle samples as normal radioactive samples and to minimize radiation exposure when performing required analyses.

Chemistry Technician

4.5.2 PERFORM PASS sample analysis as follows:

- Refer To the following Sections as applicable and PERFORM analysis:
  - _____ Section 4.6, "Gas Isotopic Analysis"
  - _____ Section 4.7, "Gas Composition Analysis"

_____ 4.5.3 WHEN analyses are complete, REPORT results to MRDA or AMRDA.

_____ 4.5.4 Refer To CP 3804L–001 and SIGN and DATE "Performed By" section.

_____ 4.5.5 IF copies of results are requested, FAX or SEND copies of the following to requesting individuals:

- Attachment 2
- CP 3804L–001

_____ 4.5.6 IF Section 4.8, "Restoration from PASS Sample Acquisition," has **not** been completed, Go To Section 4.8 and COMPLETE PASS system restoration.

– End of Section 4.5 –

4.6 Gas Isotopic Analysis

_____ 4.6.1 PLACE 2.5 cm shelf in detector to be used for gas isotopic analysis.

_____ 4.6.2 DETERMINE gas isotopic activity as follows:

a. Using the following information, Refer To CP 801/2801/3801AT, "Gamma Spectroscopy Counting System Maintenance and Operation," and ANALYZE sample:

- Open cave
- Applicable geometry for shelf being used
- Five minute count time
- General library
- Sample volume of 0.250 cc
- Sample date and time as recorded on CP 3804L–001

b. IF dead time is greater than or equal to 20%, PERFORM the following:

_____ 1) ABORT count.

_____ 2) REPLACE shelf with next higher shelf.

_____ 3) Go To step 4.6.2.

_____ c. STORE gas vial in shielded location.

d. DETERMINE background as follows:

1) Using the following information, Refer To CP 801/2801/3801AT, "Gamma Spectroscopy Counting System Maintenance and Operation," and PERFORM background count on detector that was used for gas isotopic analysis.

- Open cave
- Applicable geometry for shelf that was used
- Five minute count time
- General library
- Sample volume of 0.250 cc

2) RECORD all identified isotopes and their associated background activity levels in μCi/cc on Attachment 2.

e. Refer To Attachment 2 and CALCULATE gas activity as follows:

1) Refer To gas isotopic printout and RECORD all identified isotopes and their associated activity levels in μCi/cc.

2) For each isotope listed, SUBTRACT background activity from printout activity and RECORD as isotope activity in μCi/cc.

3) ADD isotope activities and RECORD as gas activity in μCi/cc.

4) Refer To CP 3804L–001 and RECORD gas activity in μCi/cc in "Sample Data" table.

4.6.3 PLACE empty "GAS ISOTOPIC" syringe in shielded location.

– End of Section 4.6 –

4.7 Gas Composition Analysis

NOTE

The "GAS COMP" results are for information only and are not used in any sample calculations.

_____ 4.7.1 Refer To CP 801/2801/3801AD, "Gas Chromatograph Operation and Calibration," and ANALYZE 2.0 ml syringe labeled "GAS COMP" for the following:

- % hydrogen
- % oxygen
- % nitrogen

_____ 4.7.2 PLACE empty "GAS COMP" syringe in shielded location.

_____ 4.7.3 WHEN analysis is complete, Refer To CP 3804L–001 and RECORD gas composition results in % in "Sample Data" table.

– End of Section 4.7 –

4.8 Restoration from PASS Sample Acquisition

NOTE

Entry into Section 4.8 may occur at any time during performance of Sections 4.1 through 4.4. Some steps in Section 4.8 may already be completed depending on the entry point.

4.8.1 IF sample flow was achieved at any time during PASS sample, FLUSH PASS system as follows:

_____ a. IF Section 4.3, "System Flush," has **not** been performed, PERFORM Section 4.3.

_____ b. At 3SSP–PNL2, containment air sample remote panel, POSITION 3SSP–V2035 to "SAMPLE."

c. INITIATE nitrogen purge as follows:

_____ 1) POSITION 3SSP–V112 to "NITROGEN FLUSH."

_____ 2) POSITION 3SSP–V2037 to "OPEN."

_____ 3) POSITION 3SSP–V2034 to "ON."

_____ d. RECORD flow rate: _____ lpm

_____ e. WAIT 3 minutes.

_____ f. POSITION 3SSP–V2037 to "CLOSE."

_____ g. CHECK that flow rate is less than value recorded in step 4.8.1 d.

_____ h. WAIT 3 minutes.

4.8.2 POSITION the following valves as indicated:

_____ a. 3SSP–V2034 to "OFF."

_____ b. 3SSP–V112 to "OFF."

_____ c. 3SSP–V2037 to "OPEN."

_____ 4.8.3 Refer To CP 3804L–002 and VERIFY or INITIAL valve lineup for valves at 3SSP–PNL2.

_____ 4.8.4 CLOSE 3SSP–V53, nitrogen supply to containment air sample PNL2.

_____ 4.8.5 PUSH "POWER ON" button to de–energize panel.

_____ 4.8.6 CLOSE and LOCK panel door.

4.8.7 PERFORM the following:

_____ a. CLOSE 3HVR–DMP1301, 3SSP–SAS2 exhaust damper [Ref. 6.1].

_____ b. Using damper operating tool, CLOSE 3HVR*DMP60, 3SSP–SAS1/SAS2 exhaust isolation damper [Ref. 6.1]

CAUTION

It is imperative **not** to push in on the hand wheel when operating the following valves unless SM/US permission is obtained. This engages the clutch override and could result in damage to the valve.

Train A			Train B		
3HCS*V2	3HCS*V6	3SSP*V59	3HCS*V9	3HCS*V13	3SSP*V60
3HCS*V3	3SSP*V51		3HCS*V10	3SSP*V52	

c. IF hydrogen recombiner train A was selected in step 2.1.13, PERFORM the following:

1) CLOSE and LOCK the following valves

- 3SSP*V51, containment air sample return cross–connect

- 3SSP*V59, containment air sample supply cross–connect

2) IF train A hydrogen recombiner is **not** running, CLOSE and LOCK the following valves:

- 3HCS*V2, recombiner 1A supply outer isolation

- 3HCS*V3, recombiner 1A supply inner isolation

- 3HCS*V6, recombiner RBNR–1A return isolation

CAUTION

It is imperative **not** to push in on the hand wheel when operating the following valves unless SM/US permission is obtained. This engages the clutch override and could result in damage to the valve.

Train A			Train B		
3HCS*V2	3HCS*V6	3SSP*V59	3HCS*V9	3HCS*V13	3SSP*V60
3HCS*V3	3SSP*V51		3HCS*V10	3SSP*V52	

_____ d. IF hydrogen recombiner train B was selected in step 2.1.13, PERFORM the following:

1) CLOSE and LOCK the following valves

_____ • 3SSP*V52, containment air sample return cross–connect

_____ • 3SSP*V60, containment air sample supply cross–connect

2) IF train B hydrogen recombiner is **not** running, CLOSE and LOCK the following valves:

_____ • 3HCS*V9, recombiner 1B supply outer isolation

_____ • 3HCS*V10, recombiner 1B supply inner isolation

_____ • 3HCS*V13, recombiner RBNR–1B return isolation

_____ 4.8.8 Refer To CP 3804L–002 and VERIFY remainder of valve lineup.

_____ 4.8.9 Refer To CP 3804L–002 and PERFORM independent verification of system lineup.

NOTE

When this step is completed, constant communications with the control room in Modes 1–4 is no longer required.

4.8.10 NOTIFY MCRO of the following:

- IF closed in step 4.8.7 c.2), the following valves are closed and locked:
  - 3HCS*V2, recombiner 1A supply outer isolation,
  - 3HCS*V3, recombiner 1A supply inner isolation
  - 3HCS*V6, recombiner RBNR−1A return isolation
- IF closed in step 4.8.7 d.2), the following valves are closed and locked:
  - 3HCS*V9, recombiner 1B supply outer isolation
  - 3HCS*V10, recombiner 1B supply inner isolation
  - 3HCS*V13, recombiner RBNR−1B return isolation
- IF in operating Modes 1−4, NOTIFY MCRO that tracking requirements of Tech Spec surveillance 4.6.1.1.a are no longer required for valves that were reported closed and locked
- 3HVR*DMP60 is closed
- IF in operating Modes 1−4, REQUEST MCRO exit LCO 3.6.6.2 for 3HVR*DMP60 [Ref. 6.1].
- PASS system is secured.
- IF in operating Modes 1−4, REQUEST permission to secure constant communications with control room

4.8.11 RETURN valve key.

4.8.12 SUBMIT completed CP 3804L−002 to Chemistry Supervision for review.

4.8.13 IF operational difficulties were encountered, PERFORM one or both of the following:

- Refer To RP16, "Trouble Reporting," and INITIATE trouble report for applicable equipment and RECORD TR number on CP 3804L–001

- Refer To MP–16–CAP–SAP01, "Condition Report Initiation," and INITIATE CR and RECORD CR number on CP 3804L–001

4.8.14 RECORD number of needle punctures for the containment air septum in PASS log.

ALARA

Step 4.8.15 may not be performed due to the radiation levels in the hydrogen recombiner building.

4.8.15 OBTAIN permission from MOSC and PERFORM the following:

- IF containment air septum has been punctured 10 times or more since its last replacement, Refer To Attachment 3 and REPLACE septum

- Refer To CP 3804K (Att), "PASS Sample Equipment Inventory," and INVENTORY PASS sampling equipment and LOCK PASS cabinet door handle

4.8.16 SIGN and DATE "Performed By" block on CP 3804L–001.

4.8.17 SUBMIT the following completed documents to Chemistry Supervision.

- CP 3804L–001

- CP 3804K (Att), "PASS Sample Equipment Inventory"

Chemistry Supervision

4.8.18 SUBMIT copy of reviewed CP 3804L–001 and applicable CR's to system engineer.

– End of Section 4.8 –

5. REVIEW AND SIGNOFF

5.1 The review and signoff for this procedure is located in the following attachments and forms:

- Attachment 2
- Attachment 3
- CP 3804L–001
- CP 3804L–002

6. REFERENCES

6.1 PIR 3–93–021, "SLCRS Boundary Breach"

6.2 Technical Manual for Containment Air Post Accident Sample System," General Dynamics Corporation, Electric Boat Division, Reactor Plant Services

6.3 Installation,Operating, and Maintenance Instructions Model MB–151 Post Accident Air Sample Compressor

6.4 Regulatory Guide 1.97

6.5 Post Accident Sample System Component Instruction Literature

6.6 INPO Good Practice CT–707, "Post–Accident Sampling Preparedness"

6.7 NUREG 0737

6.8 S&W DWG. No 12179–EM–155A

6.9 S&W DWG. No 12179–EM–115A

6.10 S&W DWG. No 12179–CP–402001

6.11 S&W DWG. No 12179–CP–402002

6.12 S&W DWG. No 12179–CP–402003

6.13 S&W DWG. No 12179–CP–402004

6.14 S&W DWG. No 12179–CP–402006

6.15 S&W DWG. No 12179–CP–402009

6.16 S&W DWG. No 12179–CP–4020014

6.17 S&W DWG. No 12179–CP–4020015

6.18 S&W DWG. No 12179–CP–4020053

6.19 S&W DWG. No 12179–CP–4020054

6.20 S&W DWG. No 12179–CP–4020056

6.21 S&W DWG. No 12179–CP–402700

6.22 Correspondence B11121, "Millstone Nuclear Power Station, Unit No. 3, Response to Chemical Engineering Branch DSER Open Item," dated April 9, 1984, from Northeast Utilities to the NRC

6.23 Correspondence B11177, "Millstone Nuclear Power Station, Unit No. 3, Response to Chemical Engineering Branch DSER Open Item," dated May 10, 1984, from Northeast Utilities to the NRC

6.24 NUREG–1031, "Safety Evaluation report related to the operation of Millstone Nuclear Power Station, Unit No. 3," dated August 2, 1984.

6.25 DCR M3–98034, "Setpoint Change to 3GSN–PCV106, 3SSP–PCV80, and 3SSP–PCV82"

6.26 DCN DM3–00–0638–98, "Setpoint Change to 3GSN–PCV106, 3SSP–PCV80, and 3SSP–PCV82"

6.27 Engineering Calculation 3SSP–01632–I–3 |

6.28 NRC, B18443 Dated July 31, 2001. | ①

7. SUMMARY OF CHANGES

7.1 Added simplified drawing of containment air PASS system.

7.2 Added flat–tipped screwdriver and valve wrench to tools and consumables.

7.3 Deleted "(Obtained from MCRO)" from valve key description.

7.4 Changed basis for 45–50 psig on 3SSP–PCV82 to Engineering Calculation 3SSP–01632–I–3.

7.5 Added caution associated with remotely operated valves that have clutches.

7.6 Added numerous signoffs to substeps.

7.7 Added initial system alignment check and deleted associated steps in body of procedure.

7.8 Deleted step to remove counting shelf when counting background.

7.9 Changed steps to allow hydrogen recombiner isolations to remain open if hydrogen recombiner is running.

7.10 Added steps to generate TR and/or CR when operational difficulties are encountered.

7.11 Added bullet to request permission from SM/US prior to securing constant communications.

7.12 Added requirement to obtain permission from MOSC to changeout septum and inventory PASS equipment. Added alara above step.

7.13 Changed septum changeout frequency to every 10 punctures.

7.14 Added containment air equipment to CP 3804K (Att), "PASS Sample Equipment Inventory," and deleted inventory list from this procedure. Added requirement to lock PASS cabinet door handle when inventory is completed.

7.15 Added step to submit PASS inventory to Chemistry Supervision.

7.16 Added step to submit copy of reviewed chemistry form CP 3804L–001 and applicable CR's to system engineer.

7.17 A note was added to the cover page of this procedure to ensure a review is performed by the Radiological Engineering Services whenever modifications to this procedure are made that may impact dose limit time and motion study calculations. This is in response to AR 99005798–06.

Summary of Changes Rev. 002–01

7.18 Editorial Correction; Added Reference 6.28 NRC commitment letter. B18443. AR #01005693–01.

Attachment 1
Initial System Alignment Check
(Sheet 1 of 1)

Component ID	Description	Position	Performed	
			Initial	Date
3SSP–PNL2				
3SSP–V2027	Containment air remote module N2 supply isolation valve	OP		
3SSP–V2029	Containment air remote module N2 storage tank isolation valve	CL		
3SSP–V2030	Containment air remote module N2 storage tank vent valve	CL		
3SSP–PCV82	Nitrogen pressure regulator	Backed Off		
Outside "A" Recombiner Cubicle				
		Observe caution sign at 3SSP–V46		
3SSP–V46	Air sample pump P4 inlet isolation valve	OP		
Post Accident Sample Module Room				
3SSP–V2036	Containment air sample module internal bypass valve	CL		
3SSP–V188	3–way divert valve to iodine filter FLT1	BYP		
3SSP–V189	Iodine filter FLT1 outlet isolation valve	CL		
3SSP–V191	Iodine filter FLT1 inlet isolation valve	CL		

Attachment 2

Containment Air Gas Activity Worksheet

(Sheet 1 of 1)

Printout Activity − *Background* = *Isotope Activity*

Isotope	Printout Activity (2−place accuracy) (μCi/cc)	Background (μCi/cc)	Isotope Activity (2−place accuracy) (μCi/cc)
		Gas Activity (2−place accuracy) (μCi/cc)	

NOTE: Gas Activity = summation of all isotope activities.

Prepared by: ____________________

Date: __________

SUBMIT completed attachment to Chemistry Supervision.

Level of Use
Continuous

STOP THINK ACT REVIEW

Attachment 3
3SSP–SAS2 Septum Replacement
(Sheet 1 of 1)

NOTE

The required tools and consumables can be found in the PASS cabinet located in the H_2 recombiner building.

_____ 1. DON protective clothing as directed by Health Physics.

_____ 2. Using 1/2″ socket, UNSCREW and REMOVE needle guide.

_____ 3. IF old septum did **not** come out with septum holder, REMOVE old septum using scribe or tweezers.

_____ 4. Using tweezers and septum insertion tool, INSTALL new septum.

_____ 5. Using 1/2″ socket wrench, INSTALL needle guide.

_____ 6. RECORD septum replacement in PASS log.

Replaced by: _____ Date: _____

SUBMIT completed attachment to Chemistry Supervision.

Attacnment 4
Containment Air PASS Simplified Drawing
(Sheet 1 of 1)

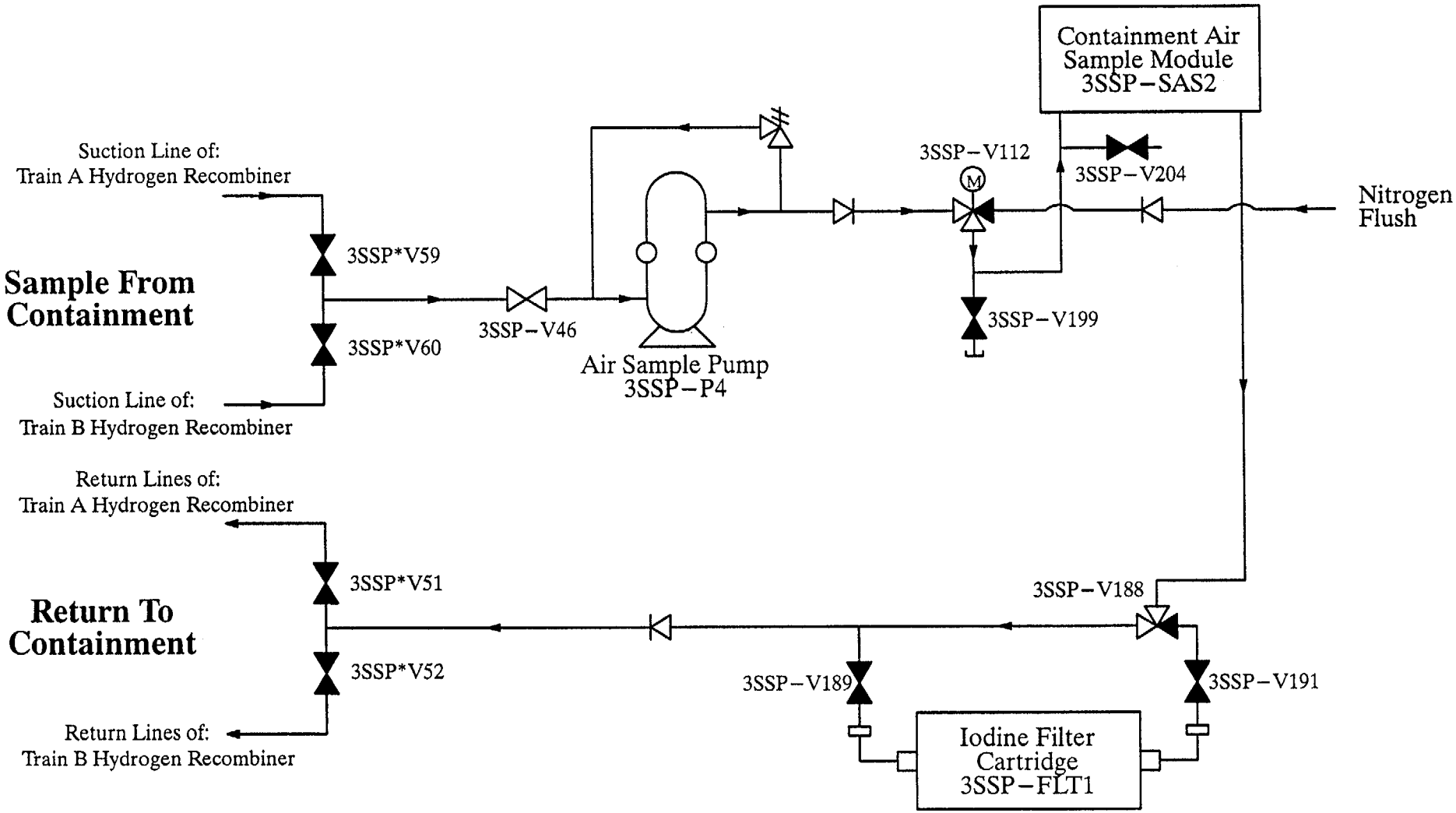

Level of Use
Continuous

STOP THINK ACT REVIEW

08/22/01
Approval Date

08/23/01
Effective Date

Document Action Request

SPG # 020123-191208

A

Initiated By: Nileen Drzewianowski Date: 01/24/2002 Department SPG Ext 5139

Document No: CP 3804M Rev. No: 001 Minor Rev No. 02

Title: **PASS Ventilation Samples**

B

Reason for Request (attach commitments,CR's,AR's,etc)

Editorial Correction AR# 01005693-01 Added NRC Commitment reference AR# 99005798-06,

Continued

C

Select One See MP-05-DC-SAP01 sect 2.3 to determine type of change

☐ Intent Change (SQR Independent, RCD, ENV Screen Required (Other reviews may be required. See MP-05-DC-FAP 01.1 Att 3 ☑ Edit Corr ☐ Non-Intent Change (Only SQR Independent Review and Env. screen Required)

D

Editorial Correction Approval

Plant Mngt Staff Member - Approval / Date

TPC Interim Approval

/

(1) Plant Mngt Staff Member Print/Sign/Date

/

(2) SM/SRO/CFH on Unit Print/Sign/Date

E

Procedure Request/Feedback Disposition

Priority: ☑ Perform Now ☐ Perform Later - See Comments

Activity: ☐ Revision ☑ Minor Revision See DC-GDL01 for guidance ☐ Cleanup Rev ☐ Biennial Review ☐ Cancellation ☐ Supercedure

☐ TPC ☐ OTC ☐ Place in Void

F

Reviews continued ☐	Print	Sign	Date	SQR Qualified Yes	No	Dept.	✓ If Comments
☐				☐	☐		☐
☐				☐	☐		☐
☐				☐	☐		☐
☐				☐	☐		☐
☐				☐	☐		☐
Licensing Basis ☐	N/A	N/A	N/A	☐	☐	N/A	☐
Independent ☐	N/A	N/A	N/A	☐	☐	N/A	☐

G

An NRRL update was required ? ☐ Yes

H

1. ☑ **SQR Program Final Review and Appproval**

Approval ☐ Disapproval ☐

N/A /

SQR Qualified Independent Reviewer / Date

N/A

Department Head/Responsible Individual

N/A

Approval Date

2. ☐ **SORC** ☑ **RI/DH Final Review and Approval**

N/A

Department Head/Responsible Individual Sign

Meeting No. N/A

N/A

SORC Approval Signature

N/A

Approval Date

I

Effective Date 01/30/02

MILLSTONE NUCLEAR POWER STATION
CHEMISTRY PROCEDURE

STOP THINK ACT REVIEW

PASS Ventilation Samples
[✣Ref. 6.12]

CP 3804M

Rev. 001–02

NOTE

A review by the Emergency Planning Department is required whenever this procedure is revised or whenever changes are made to this procedure which impact the ability to collect and analyze a PASS sample.

A review by the Nuclear Fuels Safety Analysis is required whenever modifications to this procedure may impact dose limit time and motion study calculations. ②

Approval Date: 01/28/02

Effective Date: 01/30/02

Level of Use
Continuous

PASS Ventilation Samples

TABLE OF CONTENTS

ATTACHMENTS AND FORMS

1. PURPOSE

1.1 Objective

Provide instructions for sample acquisition and analysis from the Unit 3 ventilation system during Station Emergency Response Organization (SERO) activation when high radioactivity levels, due to an accident, may preclude the normal (conventional) sampling method.

This procedure partially satisfies the requirements listed in Unit 3 Technical Specification 6.8.4 d.

1.2 Discussion

The time required to collect and analyze samples should be 3 hours or less from the time the ADTS makes the decision to obtain a sample using PASS.

Sections 4.1, 4.2, and 4.3 are distinct sections that may be performed independently of each other. Section 4.4 is completed following completion of Sections 4.1, 4.2, or 4.3.

Sections 4.5, 4.6, 4.7, 4.8, and 4.9 are distinct sections that may be performed independently of each other. Section 4.10 is completed following completion of Sections 4.5, 4.6, 4.7, 4.8, or 4.9.

1.3 Applicability

This procedure is applicable during SERO activation when in–plant radioactivity levels are too high to permit ventilation sampling via the normal (conventional) method.

1.4 Frequency

Performance of this procedure may be repeated periodically during SERO activation, when requested by the MRDA or the AMRDA.

2. PREREQUISITES

2.1 General

___/___ 2.1.1 SERO is activated.

___/___ 2.1.2 MCRO has been notified that ventilation samples will be taken.

___/___ 2.1.3 Health Physics has been notified that ventilation samples will be taken.

____/____ 2.1.4 Health Physics has evaluated need for RWP.

____/____ 2.1.5 Lead brick shielding has been stacked at lab ventilation hood (3 brick tall rectangle, 2 bricks on each side, 24 bricks total)

____/____ 2.1.6 Computer radioisotopic analysis system in operation and calibrated.

____/____ 2.1.7 Manager of Radiological Dose Assessment (MRDA) or the Assistant Manager of Radiological Dose Assessment (AMRDA) has requested ventilation samples to include the following:

Check Requested Analysis

3HVR*RE10

☐ Gas isotopic

3HVR*RE10A (High Range)

☐ Iodine and particulate

3HVR*RE10B (Normal)

☐ Iodine and particulate

3HVR*RE19

☐ Gas isotopic

3HVR*RE19A (High Range)

☐ Iodine and particulate

3HVR*RE19B (Normal)

☐ Iodine and particulate

3HVQ–RE49

☐ Gas isotopic

☐ Iodine and particulate

2.1.8 Ventilation PASS Team has completed pre–job brief as follows:

____/____ • Manager of Operational Support Center (MOSC) – designates, assembles, and briefs the Ventilation PASS Team for implementation of this procedure

____/____ • Operational Support Center Assistant Radiological Protection Supervisor (OSC ARPS) with the concurrence of the Manager of Radiological Consequence Assessment (MRCA) – specifies the radiological controls required for implementation of this procedure

2.2 Documents

2.2.1 RWP for PASS sample collection (If Health Physics determines is necessary).

2.2.2 CP 801/2801/3801AT, "Gamma Spectroscopy Counting System Maintenance and Operation"

2.2.3 SP 3867 (Att), "3HVR*RE10B and 3HVQ–RE49 Daily Average Logsheet"

2.3 Personnel

2.3.1 Manager of Radiological Dose Assessment (MRDA)

2.3.2 Assistant Manager of Radiological Dose Assessment (AMRDA)

2.3.3 Manager of Radiological Consequence Assessment (MRCA)

2.3.4 Manager of Operational Support Center (MOSC)

2.3.5 Operational Support Center Assistant Radiological Protection Supervisor (OSC ARPS)

2.3.6 Manager of Control Room Operations (MCRO)

2.3.7 Ventilation PASS Team consisting of at least the following personnel:

- At least one Chemistry Technician
- At least one Health Physics Technician

2.4 Tools and Consumables

- PASS transport cart
- Shielded transport container
- Sample bucket with lid
- KERIC control unit key
- Plastic bags with labels
- Silver zeolite cartridges
- Particulate filters
- Cartridge holders
- Mechanical fingers
- Reach rod
- Gas flask with septum and isolation stopcocks
- 14.4 ml gas vials
- 14.4 ml gas vial stoppers
- 5 cc gas syringe
- Filter holder (for blowing out noble gases in lab hood)
- Sample tubing

2.5 Definitions

2.5.1 SLCRS – supplementary leak collection and release system

2.5.2 CR – Condition Report

3. PRECAUTIONS

3.1 The sample system particulate filters and iodine cartridges may be highly radioactive resulting in high radiation levels in the vicinity of the ventilation monitor. If radiation levels are greater than 1 R/hr, notify the MRDA or the AMRDA and wait for instructions.

3.2 Health Physics should be consulted to determine whether to transport the sample in a sample bucket with lid or in the shielded transport container. The decision should be made taking the following into consideration:

- Gas or particulate channel reading (where available)
- Sample dose rate
- Sample location dose rates
- Availability of elevator (None available for 3HVQ–RE49)
- Difficulty in moving shielded transport container versus sample bucket

4. INSTRUCTIONS

4.1 3HVR*RE10 Gas Sample Collection

_____ 4.1.1 NOTIFY MCRO that a 3HVR*RE10 gas sample will be collected by Ventilation PASS Team consisting of the following:

- At least one Chemistry Technician
- At least one Health Physics Technician

ALARA

Health Physics should be consulted to determine whether to transport the sample in a sample bucket with lid or in the shielded transport container. The decision should be made taking the following into consideration:

- 3HVR*RE10B gas channel reading
- Sample dose rate
- Sample location dose rates
- Availability of elevator (None available for 3HVQ–RE49)
- Difficulty in moving shielded transport container versus sample bucket

_____ 4.1.2 PROCEED to Radiation Monitor 3HVR*RE10 with the following:

- 5 cc gas syringe
- Stoppered and evacuated 14.4 ml gas vial
- Gas flask with septum and isolation stopcocks
- Sample bucket with lid or shielded transport container

4.1.3 REMOVE caps and INSTALL sample tubing on the following valves:

_____ • 3HVR–V847, RE 10B sample test connection

_____ • 3HVR–V849, RE 10B test sample connection isolation valve

4.1.4 Using sample tubing, CONNECT the following points:

- 3HVR–V847, RE 10B sample test connection, to one end of gas flask
- Other end of gas flask to temporary sample pump suction
- Temporary sample pump discharge to 3HVR–V849, RE 10B test sample connection isolation valve

4.1.5 OPEN the following valves:

- Both gas flask stopcocks
- 3HVR–V847, RE 10B sample test connection
- 3HVR–V849, RE 10B test sample connection isolation valve

4.1.6 Using switch on side of temporary sample pump cabinet, ENERGIZE cabinet.

4.1.7 START temporary sample pump and ADJUST flow rate to one of the following ranges:

- 28 to 42 lpm
- 1 to 1.5 cfm

4.1.8 WAIT at least 30 seconds.

4.1.9 SECURE sampling as follows:

a. STOP temporary sample pump.

b. Using switch on side of temporary sample pump cabinet, DE–ENERGIZE cabinet.

c. CLOSE the following valves:

- Both gas flask stopcocks
- 3HVR–V847, RE 10B sample test connection
- 3HVR–V849, RE 10B test sample connection isolation valve

_____ d. RECORD 3HVR*RE10 sample date and time on Attachment 1.

_____ 4.1.10 Using gas syringe, DRAW 5 cc from gas flask.

_____ 4.1.11 LOCK sample in syringe and REMOVE from gas flask.

_____ 4.1.12 INJECT needle into stoppered 14.4 ml gas vial.

_____ 4.1.13 UNLOCK syringe and INJECT contents into stoppered 14.4 ml gas vial.

_____ 4.1.14 PLACE gas vial and syringe in one of the following:

- Sample bucket with lid
- Shielded transport container

_____ 4.1.15 IF 3HVR*RE19 gas isotopic sample was also requested in step 2.1.7 AND it desired to collect it at this time, Go To Section 4.2 and COLLECT sample.

_____ 4.1.16 TRANSPORT sample to lab.

_____ 4.1.17 Go To Section 4.4.

– End of Section 4.1 –

4.2 3HVR*RE19 Gas Sample Collection

4.2.1 NOTIFY MCRO that a 3HVR*RE19 gas sample will be collected by Ventilation PASS Team consisting of the following:

- At least one Chemistry Technician
- At least one Health Physics Technician

ALARA

Health Physics should be consulted to determine whether to transport the sample in a sample bucket with lid or in the shielded transport container. The decision should be made taking the following into consideration:

- 3HVR*RE19B gas channel reading
- Sample dose rate
- Sample location dose rates
- Availability of elevator (None available for 3HVQ–RE49)
- Difficulty in moving shielded transport container versus sample bucket

4.2.2 PROCEED to Radiation Monitor 3HVR*RE19 with the following:

- 5 cc gas syringe
- Stoppered and evacuated 14.4 ml gas vial
- 3HVR*RE19 sample tubing
- Gas flask with septum and isolation stopcocks
- Sample bucket with lid or shielded transport container

4.2.3 REMOVE caps and INSTALL sample tubing on the following valves:

- 3HVR*V162, RE19B sample test connection isolation valve
- 3HVR*V850, RE19B test sample connection isolation valve

4.2.4 Using sample tubing, CONNECT the following points:

_____ • 3HVR–V162, RE19B sample test connection isolation valve, to one end of gas flask

_____ • Other end of gas flask to temporary sample pump suction

_____ • Temporary sample pump discharge to 3HVR*V850, RE19B sample test connection isolation valve

4.2.5 OPEN the following valves:

_____ • Both gas flask stopcocks

_____ • 3HVR*V162, RE19B sample test connection isolation valve

_____ • 3HVR*V850, RE19B test sample connection isolation valve

_____ 4.2.6 START temporary sample pump and ADJUST flow rate to one of the following ranges:

• 28 to 42 lpm

• 1 to 1.5 cfm

_____ 4.2.7 WAIT at least 30 seconds.

4.2.8 SECURE sampling as follows:

_____ a. STOP temporary sample pump.

_____ b. CLOSE the following valves:

• Both gas flask stopcocks

• 3HVR*V162, RE19B sample test connection isolation valve

• 3HVR*V850, RE19B test sample connection isolation valve

_____ c. RECORD 3HVR*RE19 sample date and time on Attachment 2.

_____ 4.2.9 Using gas syringe, DRAW 5 cc from gas flask.

_____ 4.2.10 LOCK sample in syringe and REMOVE from gas flask.

_____ 4.2.11 INJECT needle into stoppered 14.4 ml gas vial.

_____ 4.2.12 UNLOCK syringe and INJECT contents into stoppered 14.4 ml gas vial.

_____ 4.2.13 PLACE gas vial and syringe in one of the following:

- Sample bucket with lid
- Shielded transport container

_____ 4.2.14 IF 3HVR*RE10 gas isotopic sample was requested in step 2.1.7 AND it desired to collect it at this time, Go To Section 4.1 and COLLECT sample.

_____ 4.2.15 TRANSPORT sample to lab.

4.2.16 Go To Section 4.4.

– End of Section 4.2 –

4.3 3HVQ–RE49 Gas Sample Collection

_____ 4.3.1 NOTIFY MCRO that a 3HVQ–RE49 gas sample will be collected by Ventilation PASS Team consisting of the following:

- At least one Chemistry Technician
- At least one Health Physics Technician

ALARA

Health Physics should be consulted to determine whether to transport the sample in a sample bucket with lid or in the shielded transport container. The decision should be made taking the following into consideration:

- 3HVQ–RE49 gas channel reading
- Sample dose rate
- Sample location dose rates
- Availability of elevator (None available for 3HVQ–RE49)
- Difficulty in moving shielded transport container versus sample bucket

_____ 4.3.2 PROCEED to Radiation Monitor 3HVQ–RE49 with the following:

- 5 cc gas syringe
- Stoppered and evacuated 14.4 ml gas vial
- Gas flask with septum and isolation stopcocks
- Sample bucket with lid or shielded transport container

4.3.3 REMOVE caps and INSTALL sample tubing on the following valves:

_____ - 3HVQ–V2041, RE49 inlet sample isolation

_____ - 3HVQ–V2040, RE49 outlet sample isolation

4.3.4 Using sample tubing, CONNECT the following points:

- 3HVQ–V2041, RE49 inlet sample isolation, to one end of gas flask
- Other end of gas flask to temporary sample pump suction
- Temporary sample pump discharge to 3HVQ–V2040, RE49 outlet sample isolation

4.3.5 OPEN the following valves:

- Both gas flask stopcocks
- 3HVQ–V2041, RE49 inlet sample isolation
- 3HVQ–V2040, RE49 outlet sample isolation

4.3.6 Using switch on side of temporary sample pump cabinet, ENERGIZE cabinet.

4.3.7 START temporary sample pump and ADJUST flow rate to one of the following ranges:

- 28 to 42 lpm
- 1 to 1.5 cfm

4.3.8 WAIT at least 30 seconds.

4.3.9 SECURE sampling as follows:

a. STOP temporary sample pump.

b. Using switch on side of temporary sample pump cabinet, DE–ENERGIZE cabinet.

c. CLOSE the following valves:

- Both gas flask stopcocks
- 3HVQ–V2041, RE49 inlet sample isolation
- 3HVQ–V2040, RE49 outlet sample isolation

_____ d. RECORD 3HVQ–RE49 sample date and time on Attachment 3.

_____ 4.3.10 Using gas syringe, DRAW 5 cc from gas flask.

_____ 4.3.11 LOCK sample in syringe and REMOVE from gas flask.

_____ 4.3.12 INJECT needle into stoppered 14.4 ml gas vial.

_____ 4.3.13 UNLOCK syringe and INJECT contents into stoppered 14.4 ml gas vial.

_____ 4.3.14 PLACE gas vial and syringe in one of the following:

- Sample bucket with lid
- Shielded transport container

_____ 4.3.15 TRANSPORT sample to lab.

_____ 4.3.16 Go To Section 4.4.

– End of Section 4.3 –

4.4 Gas Sample Analysis

_____ 4.4.1 PLACE empty syringe in labeled plastic bag and SEAL bag.

_____ 4.4.2 PLACE sealed plastic bag in shielded location.

_____ 4.4.3 PLACE 2.5 cm shelf in detector to be used for gas isotopic analysis.

4.4.4 DETERMINE gas isotopic activity as follows:

_____ a. Using the following information, Refer To CP 801/2801/3801AT, "Gamma Spectroscopy Counting System Maintenance and Operation," and ANALYZE gas sample:

- Open cave
- Applicable geometry for shelf being used
- Five minute count time
- General library
- 5 cc sample volume
- Sample date and time as recorded on applicable Attachment

_____ b. IF dead time is greater than or equal to 20%, PERFORM the following:

1) ABORT count.

2) REPLACE shelf with next higher shelf.

3) Go To step 4.4.4 a.

_____ c. STORE stoppered 14.4 ml gas vial in shielded location.

d. DETERMINE background as follows:

_____ 1) Using the following information, Refer To CP 801/2801/3801AT, "Gamma Spectroscopy Counting System Maintenance and Operation," and PERFORM background count on detector that was used for gas isotopic analysis.

- Open cave
- Applicable geometry for shelf that was used
- Five minute count time
- General library
- 5 cc sample volume
- Counting shelf removed

_____ 2) RECORD all identified isotopes and their associated background activity levels in μCi/cc on applicable Attachment.

_____ e. Refer To applicable Attachment and CALCULATE gas activity as follows:

1) Refer To gas isotopic printout and RECORD all identified isotopes and their associated activity levels in μCi/cc.

2) For each isotope listed, SUBTRACT background activity from printout activity and RECORD as isotope activity in μCi/cc.

3) ADD isotope activities and RECORD as total gaseous activity in μCi/cc.

4) SIGN and DATE "Prepared By" line.

_____ 4.4.5 REPORT analysis results to MRDA or AMRDA.

_____ 4.4.6 IF copies of results are requested, FAX or SEND copies of completed Attachment(s) to requesting individuals.

– End of Section 4.4 –

4.5 3HVR*RE10B (Normal) Particulate and Iodine Sample Collection

_____ 4.5.1 IF automatic isolation of on–line filters has occurred AND Kaman high range system is in service, Go To Section 4.8.

_____ 4.5.2 NOTIFY MCRO that a 3HVR*RE10B particulate and iodine sample will be collected by Ventilation PASS Team consisting of the following:

- At least one Chemistry Technician
- At least one Health Physics Technician

NOTE

1. The shielded transport container for the cartridge holder has room for only one cartridge holder.
2. Preprinted labels for the plastic bags are available in the Chemistry lab.

ALARA

Health Physics should be consulted to determine whether to transport the sample in a sample bucket with lid or in the shielded transport container. The decision should be made taking the following into consideration:

- Ventilation monitors 3HVR–RE11 thru 3HVR–RE18 particulate channel readings
- Sample dose rate
- Sample location dose rates
- Availability of elevator (None available for 3HVQ–RE49)
- Difficulty in moving shielded transport container versus sample bucket

_____ 4.5.3 PROCEED to 3HVR*RE10B with the following:

- Cartridge holder containing new silver zeolite cartridge and particulate filter
- 1 silver zeolite cartridge (If standby filter housing charcoal cartridge has not been replaced with a silver zeolite cartridge)
- 2 plastic bags with labels
- Sample bucket with lid or shielded transport container

4.5.4 IF filter 10B1 is in use, PERFORM the following:

_____ a. VERIFY silver zeolite iodine cartridge and particulate filter installed in filter 10B2 housing.

_____ b. PLACE filter 10B2 in use as follows:

- OPEN 3HVR*V2010, filter 10B2 inlet isolation valve
- OPEN 3HVR*V2011, filter 10B2 outlet isolation valve

_____ c. REMOVE filter 10B1 from use as follows:

- CLOSE 3HVR*V2012, filter 10B1 inlet isolation valve
- CLOSE 3HVR*V2013, filter 10B1 outlet isolation valve

_____ d. RECORD the following times:

- Time used cartridge and filter removed from service on plastic bags found at 3HVR*RE10B
- Time new cartridge and filter placed in service on new plastic bags

_____ e. UNBOLT filter 10B1 housing and REMOVE cartridge holder and PLACE in one of the following:

- Sample bucket with lid
- Shielded transport container

4.5.5 IF filter 10B2 is in use, PERFORM the following:

_____ a. VERIFY silver zeolite iodine cartridge and particulate filter installed in filter 10B1 housing.

_____ b. PLACE filter 10B1 in use as follows:

- OPEN 3HVR*V2012, filter 10B1 inlet isolation valve
- OPEN 3HVR*V2013, filter 10B1 outlet isolation valve

_____ c. REMOVE filter 10B2 from use as follows:

- CLOSE 3HVR*V2010, filter 10B2 inlet isolation valve
- CLOSE 3HVR*V2011, filter 10B2 outlet isolation valve

_____ d. RECORD the following times:

- Time used cartridge and filter removed from service on plastic bags found at 3HVR*RE10B
- Time new cartridge and filter placed in service on new plastic bags

_____ e. UNBOLT filter 10B2 housing and REMOVE cartridge holder and PLACE in one of the following:

- Sample bucket with lid
- Shielded transport container

_____ 4.5.6 INSTALL cartridge holder containing new silver zeolite cartridge and particulate filter and BOLT filter housing.

_____ 4.5.7 STORE new plastic bags at 3HVR*RE10B.

_____ 4.5.8 TRANSPORT sample to lab.

_____ 4.5.9 Using Kaman system, PERFORM the following:

a. VERIFY KAMAN console is on primary computer as follows:

1) PRESS "STATUS GRID" key.

2) VERIFY "UNIBUS SWITCH CONTROL" = "YES".

b. IF KAMAN console is **not** on primary computer, PERFORM the following:

1) PRESS "CANCEL DISP" key.

2) ROTATE "COMPUTER SELECT" switch to other computer.

3) Go To step 4.5.9 a.

c. TYPE "HVR10B 1" and PRESS "DATA BASE" key.

d. VERIFY the following is displayed in box in upper right hand corner of screen:

- "ON–LINE"
- "REACHABLE"
- "NO–ALARMS"

_____ 4.5.10 NOTIFY MRCO that you have completed changing iodine cartridge and particulate filter in 3HVR*RE10B.

_____ 4.5.11 Using information recorded on particulate filter and iodine cartridge plastic bags, PERFORM the following:

- RECORD sample stop date and time as sample date and time on Attachment 4
- Using start and stop date and times recorded on plastic bags, DETERMINE sample period in hours and RECORD on Attachment 4

_____ 4.5.12 Refer To SP 3867 (Att), "3HVR*RE10B and 3HVQ–RE49 Daily Average Logsheet," and CALCULATE average sample flow rate in ft^3/min for sample collection period and RECORD value on Attachment 4.

_____ 4.5.13 Refer To Attachment 4 and CALCULATE the following:

a. Average sample flow rate in ft^3/hr

b. Sample volume in cc

_____ 4.5.14 Go To Section 4.9.

– End of Section 4.5 –

4.6 3HVR*RE19B (Normal) Particulate and Iodine Sample Collection

_____ 4.6.1 IF automatic isolation of on–line filters has occurred AND Kaman high range system is in service, Go To Section 4.8.

_____ 4.6.2 NOTIFY MCRO that a 3HVR*RE19B particulate and iodine sample will be collected by Ventilation PASS Team consisting of the following:

- At least one Chemistry Technician
- At least one Health Physics Technician

NOTE

1. The shielded transport container for the cartridge holder has room for only one cartridge holder.
2. Preprinted labels for the plastic bags are available in the Chemistry lab.

ALARA

Health Physics should be consulted to determine whether to transport the sample in a sample bucket with lid or in the shielded transport container. The decision should be made taking the following into consideration:

- Ventilation monitors 3HVR–RE11 thru 3HVR–RE18 particulate channel readings
- Sample dose rate
- Sample location dose rates
- Availability of elevator (None available for 3HVQ–RE49)
- Difficulty in moving shielded transport container versus sample bucket

_____ 4.6.3 PROCEED to 3HVR*RE19B with the following:

- Cartridge holder containing new silver zeolite cartridge and particulate filter
- 1 silver zeolite cartridges (If standby filter housing charcoal cartridge has not been replaced with a silver zeolite cartridge)
- 2 plastic bags with labels
- Sample bucket with lid or shielded transport container

4.6.4 IF filter 19B1 is in use, PERFORM the following:

_____ a. VERIFY silver zeolite iodine cartridge and particulate filter installed in filter 19B2 housing.

_____ b. PLACE filter 19B2 in use as follows:

- OPEN 3HVR*V2046, filter 19B2 inlet isolation valve
- OPEN 3HVR*V2047, filter 19B2 outlet isolation valve

_____ c. REMOVE filter 19B1 from use as follows:

- CLOSE 3HVR*V2048, filter 19B1 inlet isolation valve
- CLOSE 3HVR*V2049, filter 19B1 outlet isolation valve

_____ d. RECORD the following times:

- Time used cartridge and filter removed from service on plastic bags found at 3HVR*RE19B
- Time new cartridge and filter placed in service on new plastic bags

_____ e. UNBOLT filter 19B1 housing and REMOVE cartridge holder and PLACE in one of the following:

- Sample bucket with lid
- Shielded transport container

4.6.5 IF filter 19B2 is in use, PERFORM the following:

_____ a. VERIFY silver zeolite iodine cartridge and particulate filter installed in filter 19B1 housing.

_____ b. PLACE filter 19B1 in use as follows:

- OPEN 3HVR*V2048, filter 19B1 inlet isolation valve
- OPEN 3HVR*V2049, filter 19B1 outlet isolation valve

_____ c. REMOVE filter 19B2 from use as follows:

- CLOSE 3HVR*V2046, filter 19B2 inlet isolation valve
- CLOSE 3HVR*V2047, filter 19B2 outlet isolation valve

_____ d. RECORD the following times:

- Time used cartridge and filter removed from service on plastic bags found at 3HVR*RE19B
- Time new cartridge and filter placed in service on new plastic bags

_____ e. UNBOLT filter 19B2 housing and REMOVE cartridge holder and PLACE in one of the following:

- Sample bucket with lid
- Shielded transport container

_____ 4.6.6 INSTALL cartridge holder containing new silver zeolite cartridge and particulate filter and BOLT filter housing.

_____ 4.6.7 STORE new plastic bags at 3HVR*RE19B.

_____ 4.6.8 TRANSPORT sample to lab.

_____ 4.6.9 Using Kaman system, PERFORM the following:

a. VERIFY KAMAN console is on primary computer as follows:

1) PRESS "STATUS GRID" key.

2) VERIFY "UNIBUS SWITCH CONTROL" = "YES".

b. IF KAMAN console is **not** on primary computer, PERFORM the following:

1) PRESS "CANCEL DISP" key.

2) ROTATE "COMPUTER SELECT" switch to other computer.

3) Go To step 4.6.9 a.

c. TYPE "HVR19B 1" and PRESS "DATA BASE" key.

d. VERIFY the following is displayed in box in upper right hand corner of screen:

- "ON–LINE"
- "REACHABLE"
- "NO–ALARMS"

_____ 4.6.10 NOTIFY MRCO that you have completed changing iodine cartridge and particulate filter in 3HVR*RE19B.

_____ 4.6.11 Using information recorded on particulate filter and iodine cartridge plastic bags, PERFORM the following:

- RECORD sample stop date and time as sample date and time on Attachment 5
- Using start and stop date and times recorded on plastic bags, DETERMINE sample period in hours and RECORD on Attachment 5

_____ 4.6.12 Refer To SP 3867 (Att), "3HVR*RE10B and 3HVQ–RE49 Daily Average Logsheet," and CALCULATE average sample flow rate in ft^3/min for sample collection period and RECORD value on Attachment 5.

_____ 4.6.13 Refer To Attachment 5 and CALCULATE the following:

a. Average sample flow rate in ft^3/hr

b. Sample volume in cc

_____ 4.6.14 Go To Section 4.9.

– End of Section 4.6 –

4.7 3HVQ–RE49 (Normal) Particulate and Iodine Sample Collection

_____ 4.7.1 NOTIFY MCRO that a 3HVQ–RE49 particulate and iodine sample will be collected by Ventilation PASS Team consisting of the following:

- At least one Chemistry Technician
- At least one Health Physics Technician

NOTE

1. The shielded transport container for the cartridge holder has room for only one cartridge holder.
2. Preprinted labels for the plastic bags are available in the Chemistry lab.

ALARA

Health Physics should be consulted to determine whether to transport the sample in a sample bucket with lid or in the shielded transport container. The decision should be made taking the following into consideration:

- Sample dose rate
- Sample location dose rates
- Availability of elevator (None available for 3HVQ–RE49)
- Difficulty in moving shielded transport container versus sample bucket

_____ 4.7.2 PROCEED to 3HVQ–RE49 with the following:

- Cartridge holder containing new silver zeolite cartridge and particulate filter
- 2 plastic bags with labels
- Sample bucket with lid or shielded transport container

_____ 4.7.3 At 3HVQ–RE49 skid, PLACE sample pump switch in "OFF."

_____ 4.7.4 CLOSE the following valves:

- 3HVQ–V991, RE49 inlet isolation valve
- 3HVQ–V999, RE49 outlet isolation valve

_____ 4.7.5 RECORD time used cartridge and filter removed from service on plastic bags found at 3HVQ–RE49.

_____ 4.7.6 Carefully REMOVE iodine cartridge and particulate filter from iodine–particulate sample holder and PLACE used iodine cartridge and particulate filter into plastic bags found at HVQ 49. ①

_____ 4.7.7 PLACE iodine cartridge and particulate filter into one of the following:

- Sample bucket with lid
- Shielded transport container

NOTE

3. The sample flow passes through the particulate filter first and then the iodine cartridge.
4. The particulate filter is installed with the "fibrous" side toward the iodine–particulate sample holder inlet.
5. The iodine cartridge has an arrow indicating the direction of flow through the cartridge.

4.7.8 Refer To Attachment 10 and PERFORM the following: ①

_____ a. INSPECT O–rings on HVQ 49 iodine–particulate sample holder.

_____ b. REPLACE O–rings as required.

_____ c. PLACE iodine cartridge and particulate filter into sample holder.

_____ 4.7.9 STORE new plastic bags at 3HVQ–RE49.

_____ 4.7.10 OPEN the following valves:

- 3HVQ–V991, RE49 inlet isolation valve
- 3HVQ–V999, RE49 outlet isolation valve

_____ 4.7.11 At 3HVQ–RE49 skid, PLACE sample pump switch in "AUTO."

_____ 4.7.12 RECORD time new cartridge and filter placed in service on new plastic bags

_____ 4.7.13 VERIFY sample flow rate is between red lines on flow meter located on 3HVQ–RE49 skid.

_____ 4.7.14 TRANSPORT sample to lab.

_____ 4.7.15 Using Kaman system, PERFORM the following:

a. VERIFY KAMAN console is on primary computer as follows:

1) PRESS "STATUS GRID" key.

2) VERIFY "UNIBUS SWITCH CONTROL" = "YES".

b. IF KAMAN console is **not** on primary computer, PERFORM the following:

1) PRESS "CANCEL DISP" key.

2) ROTATE "COMPUTER SELECT" switch to other computer.

3) Go To step 4.7.15 a.

c. TYPE "HVQ49 1" and PRESS "DATA BASE" key.

_____ d. VERIFY the following is displayed in box in upper right hand corner of screen:

- "ON–LINE"
- "REACHABLE"
- "NO–ALARMS"

_____ 4.7.16 NOTIFY MRCO that you have completed changing iodine cartridge and particulate filter in 3HVQ–RE49.

_____ 4.7.17 Using information recorded on particulate filter and iodine cartridge plastic bags, PERFORM the following:

- RECORD sample stop date and time as sample date and time on Attachment 6
- Using start and stop date and times recorded on plastic bags, DETERMINE sample period in hours and RECORD on Attachment 6

_____ 4.7.18 Refer To SP 3867 (Att), "3HVR*RE10B and 3HVQ–RE49 Daily Average Logsheet," and CALCULATE average sample flow rate in ft^3/min for sample collection period and RECORD value on Attachment 6.

_____ 4.7.19 Refer To Attachment 6 and CALCULATE the following:

a. Average sample flow rate in ft^3/hr

b. Sample volume in cc

_____ 4.7.20 Go To Section 4.9.

– End of Section 4.7 –

4.8 **3HVR*RE10A or 3HVR*RE19A (High Range) Particulate and Iodine Sample Collection**

_____ 4.8.1 PROCEED to Kaman Electronic Remote Indication and Control (KERIC) Unit in Unit 3 Control Room.

_____ 4.8.2 OBTAIN KERIC control unit key from MRCO and INSERT into key switch.

_____ 4.8.3 ROTATE key switch to "ENABLE" position.

NOTE

Only the active channel will indicate a radiation exposure rate greater than zero.

4.8.4 DETERMINE filter radiation dose rates as follows:

_____ a. OBTAIN display of channel 3 radiation dose rate as follows:

1) PRESS "DSP"

2) PRESS "3"

3) PRESS "23"

4) PRESS "ENT"

5) RECORD dose rate: _____ mr/hr

_____ b. OBTAIN display of channel 4 radiation dose rate as follows:

1) PRESS "DSP"

2) PRESS "4"

3) PRESS "23"

4) PRESS "ENT"

5) RECORD dose rate: _____ mr/hr

_____ c. OBTAIN display of channel 5 radiation dose rate as follows:

1) PRESS "DSP"

2) PRESS "5"

3) PRESS "23"

4) PRESS "ENT"

5) RECORD dose rate: _____ mr/hr

4.8.5 DETERMINE sample volume through each filter as follows:

_____ a. OBTAIN display of channel 3 sample volume as follows:

1) PRESS "DSP"

2) PRESS "3"

3) PRESS "37"

4) PRESS "ENT"

5) RECORD sample volume: _____ cc

_____ b. OBTAIN display of channel 4 sample volume as follows:

1) PRESS "DSP"

2) PRESS "4"

3) PRESS "37"

4) PRESS "ENT"

5) RECORD sample volume: _____ cc

_____ c. OBTAIN display of channel 5 sample volume as follows:

1) PRESS "DSP"

2) PRESS "5"

3) PRESS "37"

4) PRESS "ENT"

5) RECORD sample volume: _____ cc

_____ 4.8.6 CONSULT with MRDA or AMRDA and DETERMINE which filter(s) are to be replaced.

NOTE

A separate Attachment 7 (3HVR*RE10A) or Attachment 8 (3HVR*RE19A) is used for each filter that is removed.

_____ 4.8.7 For each filter to be replaced, CIRCLE channel number on Attachment 7 (3HVR*RE10A) or Attachment 8 (3HVR*RE19A).

4.8.8 IF filter presently in use is to be changed AND at least 1 of the other 2 filters has **not** been used, DIRECT flow to next available filter as follows:

_____ a. IF channel 3 contains next available filter, PERFORM the following:

1) PRESS "FTN"

2) PRESS "3"

3) PRESS "04"

4) PRESS "ENT"

_____ b. IF channel 4 contains next available filter, PERFORM the following:

1) PRESS "FTN"

2) PRESS "4"

3) PRESS "04"

4) PRESS "ENT"

_____ c. IF channel 5 contains next available filter, PERFORM the following:

1) PRESS "FTN"

2) PRESS "5"

3) PRESS "04"

4) PRESS "ENT"

_____ d. RECORD filter stop date and time as sample date and time on Attachment 7 (3HVR*RE10A) or Attachment 8 (3HVR*RE19A).

_____ e. Refer To step 4.8.5 and DETERMINE sample volume for filter just removed from use and RECORD new value in step 4.8.5.

_____ 4.8.9 Refer To Step 4.8.5 and RECORD sample volume for each filter to be replaced on Attachment 7 (3HVR*RE10A) or Attachment 8 (3HVR*RE19A).

NOTE

Both hours and minutes must be obtained for the sample collection period.

4.8.10 PERFORM the following to obtain sample collection period:

_____ a. OBTAIN display of sample period for filter 3 as follows:

1) PRESS "DSP"

2) PRESS "3"

3) PRESS "45"

4) PRESS "ENT"

5) RECORD display value: _____ hours

6) PRESS "EXP"

7) RECORD display value: _____ minutes

_____ b. OBTAIN display of sample period for filter 4 as follows:

1) PRESS "DSP"

2) PRESS "4"

3) PRESS "45"

4) PRESS "ENT"

5) RECORD display value: _____ hours

6) PRESS "EXP"

7) RECORD display value: _____ minutes

_____ c. OBTAIN display of sample period for filter 5 as follows:

1) PRESS "DSP"

2) PRESS "5"

3) PRESS "45"

4) PRESS "ENT"

5) RECORD display value: _____ hours

6) PRESS "EXP"

7) RECORD display value: _____ minutes

_____ 4.8.11 ROTATE KERIC control unit key switch to "DISABLE" position and REMOVE key.

NOTE

3HVR*RE10A and 3HVR*RE19A will automatically shift to the next available filter when a radiation level of 100 mr/hr is detected from the in use filter. The filters shift in sequential order from lowest channel to highest and then back to lowest.

4.8.12 IF filter to be changed was removed from service automatically, DETERMINE sample date and time as follows:

_____ a. IF filter to be changed was previous in use filter, Refer To step 4.8.10 and SUBTRACT sample period of in use filter from present time and RECORD result as sample date and time on Attachment 7 (3HVR*RE10A) or Attachment 8 (3HVR*RE19A).

_____ b. IF filter to be changed was **not** previous in use filter, Refer To step 4.8.10 and SUBTRACT sample period of running filter and previously running filter from present time and RECORD result as sample date and time on Attachment 7 (3HVR*RE10A) or Attachment 8 (3HVR*RE19A).

_____ 4.8.13 NOTIFY MCRO that a particulate and iodine sample will be collected from 3HVR*RE10A or 3HVR*RE19A by Ventilation PASS Team consisting of the following:

- At least one Chemistry Technician
- At least one Health Physics Technician

NOTE

The shielded transport container for the cartridge holder has room for only one cartridge holder.

ALARA

Health Physics should be consulted to determine whether to transport the sample in a sample bucket with lid or in the shielded transport container. The decision should be made taking the following into consideration:

- Sample dose rate (recorded in step 4.8.4)
- Sample location dose rates
- Availability of elevator (None available for 3HVQ–RE49)
- Difficulty in moving shielded transport container versus sample bucket

_____ 4.8.14 COLLECT the following equipment:

- Cartridge holder containing new silver zeolite cartridge and particulate filter for each filter to be changed out
- Sample bucket with lid or shielded transport container
- Mechanical fingers
- Reach rod

NOTE

Change filter lights are located on top of 3HVR*RE10A and 3HVR*RE19A. The change light should be lit for filters that have been removed from service following a period of use. The filter numbers and channel numbers do **not** match. The filter numbers and the corresponding channel numbers are listed below.

- Filter 1 .... Channel 3
- Filter 2 .... Channel 4
- Filter 3 .... Channel 5

_____ 4.8.15 PROCEED to 66′ 6″ elevation of Auxiliary Building.

_____ 4.8.16 UNLATCH and OPEN door of filter housing.

_____ 4.8.17 Using reach rod, LOWER filter housing.

_____ 4.8.18 Using mechanical fingers, REMOVE cartridge holder and PLACE in one of the following:

- Shielded transport container
- Sample bucket with lid

_____ 4.8.19 LABEL cartridge holder, sample bucket, or shielded transport container with applicable cartridge holder identification including the following:

- Rad monitor: 3HVR*RE10A or 3HVR*RE19A
- Channel number

_____ 4.8.20 Using mechanical fingers, PLACE cartridge holder containing new silver zeolite cartridge and particulate filter in filter housing.

_____ 4.8.21 Using reach rod, RAISE filter housing back into position.

_____ 4.8.22 CLOSE and LATCH door of filter housing.

_____ 4.8.23 IF another filter needs to be changed, Go To step 4.8.16.

_____ 4.8.24 TRANSPORT samples to lab.

_____ 4.8.25 PROCEED to Kaman Electronic Remote Indication and Control (KERIC) Unit in Unit 3 Control Room.

_____ 4.8.26 INSERT KERIC control unit key into key switch.

_____ 4.8.27 ROTATE key switch to "ENABLE" position.

CAUTION

Step 4.8.28 re–zeros all sample information. Care must be taken to only perform step 4.8.28 for the channels that now contain new silver zeolite cartridges and particulate filters that are not presently in use.

4.8.28 For each filter that was replaced, PERFORM the following:

_____ a. IF channel 3 filter was replaced, PERFORM the following:

1) PRESS "STP"

2) PRESS "3"

3) PRESS "ENT"

_____ b. IF channel 4 filter was replaced, PERFORM the following:

1) PRESS "STP"

2) PRESS "4"

3) PRESS "ENT"

_____ c. IF channel 5 filter was replaced, PERFORM the following:

1) PRESS "STP"

2) PRESS "5"

3) PRESS "ENT"

_____ 4.8.29 ROTATE KERIC control unit key switch to "DISABLE" position and REMOVE key.

_____ 4.8.30 IF no more filters are to be replaced at this time, RETURN KERIC control unit key to MRCO.

_____ 4.8.31 Go To Section 4.9.

– End of Section 4.8 –

4.9 Particulate and Iodine Sample Analysis

ALARA

The particulate filters and iodine cartridges may be highly radioactive resulting in high radiation levels in the vicinity. Health Physics should be consulted to determine appropriate handling precautions.

_____ 4.9.1 REMOVE iodine cartridge and particulate filter from cartridge holder and PERFORM the following:

- PLACE particulate filter in new plastic bag and SEAL bag.
- PLACE iodine cartridge in filter holder located in hood.

_____ 4.9.2 STORE particulate filter in shielded location.

_____ 4.9.3 BLOW air through iodine cartridge for 5 minutes.

_____ 4.9.4 REMOVE iodine cartridge from holder and PLACE in new plastic bag and SEAL bag.

4.9.5 DETERMINE iodine isotopic activity as follows:

_____ a. PLACE 2.5 cm shelf in detector to be used for iodine isotopic analysis.

_____ b. Using the following information, Refer To CP 801/2801/3801AT, "Gamma Spectroscopy Counting System Maintenance and Operation," and ANALYZE iodine sample:

- Open cave
- Applicable geometry for shelf being used
- Five minute count time
- General library
- Sample volume recorded on applicable Attachment
- Sample date and time recorded on applicable Attachment

_____ c. IF dead time is greater than or equal to 20%, PERFORM the following:

1) ABORT count.

2) REPLACE shelf with next higher shelf.

3) Go To step 4.9.5 b.

_____ d. STORE iodine cartridge in shielded location.

e. DETERMINE background as follows:

_____ 1) Using the following information, Refer To CP 801/2801/3801AT, "Gamma Spectroscopy Counting System Maintenance and Operation," and PERFORM background count on detector that was used for iodine isotopic analysis.

- Open cave
- Applicable geometry for shelf that was used
- Five minute count time
- General library
- Sample volume that was used
- Counting shelf removed

_____ 2) RECORD all identified isotopes and their associated background activity levels in μCi/cc on applicable Attachment.

f. Refer To applicable Attachment and CALCULATE iodine activity as follows:

1) Refer To iodine isotopic printout and RECORD all identified isotopes and their associated activity levels in μCi/cc.

2) For each isotope listed, SUBTRACT background activity from printout activity and RECORD as isotope activity in μCi/cc.

3) ADD isotope activities and RECORD as total iodine activity in μCi/cc.

4) MULTIPLY total iodine activity by plateout correction and RECORD as corrected total iodine activity in μCi/cc [Ref. 6.10].

4.9.6 DETERMINE particulate isotopic activity as follows:

a. PLACE 2.5 cm shelf in detector to be used for particulate isotopic analysis.

b. Using the following information, Refer To CP 801/2801/3801AT, "Gamma Spectroscopy Counting System Maintenance and Operation," and ANALYZE particulate sample.

- Open cave
- Applicable geometry for shelf being used
- Five minute count time
- General library
- Sample volume recorded on applicable Attachment
- Sample date and time recorded on applicable Attachment

c. IF dead time is greater than or equal to 20%, PERFORM the following:

1) ABORT count.

2) REPLACE shelf with next higher shelf.

3) Go To step 4.9.6 b.

d. STORE particulate filter in shielded location.

e. DETERMINE background as follows:

1) Using the following information, Refer To CP 801/2801/3801AT, "Gamma Spectroscopy Counting System Maintenance and Operation," and PERFORM background count on detector that was used for particulate isotopic analysis.

- Open cave
- Applicable geometry for shelf that was used
- Five minute count time
- General library
- Sample volume that was used
- Counting shelf removed

2) RECORD all identified isotopes and their associated background activity levels in μCi/cc on applicable Attachment.

_____ f. Refer To applicable Attachment and CALCULATE particulate activity as follows:

1) Refer To particulate isotopic printout and RECORD all identified isotopes and their associated activity levels in µCi/cc.

2) For each isotope listed, SUBTRACT background activity from printout activity and RECORD as isotope activity in µCi/cc.

3) ADD isotope activities and RECORD as total particulate activity in µCi/cc.

4) MULTIPLY total particulate activity by plateout correction and RECORD as corrected total particulate activity in µCi/cc [Ref. 6.10].

_____ 4.9.7 REPORT analysis results to MRDA or AMRDA.

_____ 4.9.8 IF copies of results are requested, FAX or SEND copies of completed Attachment(s) to requesting individuals.

4.9.9 Refer To Attachment 9 and PERFORM the following:

_____ a. INSPECT O–rings on cartridge holder.

NOTE

1. The sample flow passes through the particulate filter first and then the iodine cartridge.
2. The particulate filter is installed with the "fibrous" side toward the iodine–particulate sample holder inlet.
3. The iodine cartridge has an arrow indicating the direction of flow through the cartridge.

_____ b. INSTALL new silver zeolite cartridge and particulate filter in cartridge holder.

– End of Section 4.9 –

4.10 **Monitoring of In–Use Filters**

_____ 4.10.1 PROCEED to Kaman Electronic Remote Indication and Control (KERIC) Unit in Unit 3 Control Room.

_____ 4.10.2 OBTAIN KERIC control unit key from MRCO and INSERT into key switch.

_____ 4.10.3 ROTATE key switch to "ENABLE" position.

NOTE

Only the active channel will indicate a radiation exposure rate greater than zero.

4.10.4 DETERMINE which filter is currently in use by determining radiation dose rates as follows:

_____ a. OBTAIN display of channel 3 radiation dose rate as follows:

1) PRESS "DSP"

2) PRESS "3"

3) PRESS "23"

4) PRESS "ENT"

5) RECORD dose rate: _____ mr/hr

_____ b. OBTAIN display of channel 4 radiation dose rate as follows:

1) PRESS "DSP"

2) PRESS "4"

3) PRESS "23"

4) PRESS "ENT"

5) RECORD dose rate: _____ mr/hr

_____ c. OBTAIN display of channel 5 radiation dose rate as follows:

1) PRESS "DSP"

2) PRESS "5"

3) PRESS "23"

4) PRESS "ENT"

5) RECORD dose rate: _____ mr/hr

_____ 4.10.5 ROTATE KERIC control unit key switch to "DISABLE" position and REMOVE key.

_____ 4.10.6 RETURN KERIC control unit key to MRCO.

_____ 4.10.7 IF filter radiation level approaches 25 mr/hr, NOTIFY MRDA or AMRDA.

– End of Section 4.10 –

5. REVIEW AND SIGNOFF

5.1 The review and signoff for this procedure is located in Attachments 1 through 8.

6. REFERENCES

6.1 Regulatory Guide 1.97

6.2 NUREG 0737

6.3 NUREG–1031, "Safety Evaluation report related to the operation of Millstone Nuclear Power Station, Unit No. 3," dated August 2, 1984.

6.4 "Final Safety Analysis Report Unit 3", Section 13.3 "Millstone Nuclear Power Station Emergency Plan"

6.5 "Millstone Nuclear Power Station Emergency Plan"

6.6 NUREG–0654, Revision 1, "Criteria for Preparation of Radiological Emergency Response Plans, and Preparedness in Support of Nuclear Power Plants"

6.7 NUREG–0737, "Clarification of TMI Action Plan Requirements, Supplement 1, Requirements for Emergency Response Capability"

6.8 Kaman Sciences Corporation; Instruction Manual, "Operation–Maintenance Instructions and Parts Catalog for Accident Range Gas Monitor, Model KMG–HRC"

6.9 "Radiological Effluent Monitoring and Off–Site Dose Calculation Manual," (REMODCM)

6.10 Inspector follow up items: 50–245/84–07–03 and 50–336/84–09–03. Corrected iodine and particulate activity released for plateout.

6.11 DCN DM3–00–0258–99, "Addition of Sample Connections for Radiation Monitor 3HVQ–RE49B"

6.12 NRC, B18443 Dated, July 31, 2001 ②

7. SUMMARY OF CHANGES

7.1 Moved 3HVQ–RE49 sample location to new valves installed under Reference 6.11.

7.2 Added steps to obtain number of minutes a filter was in service.

7.3 Added note indicating that only the active channel will display a measured dose.

Summary of Changes – Revision 1, Change 1

7.4 Modified procedure and added Attachment 10 to reflect new collector assembly (iodine cartridge and particulate filter holder) installed under Reference 6.11.

Summary of Changes Rev. 001–02

7.5 Editorial Correction; Added Reference 6.12 NRC commitment letter. B18443. AR #01005693–01.

7.6 Added information in note box on cover sheet that a review by the Nuclear Fuels Safety Analysis is required whenever modifications to this procedure may impact dose limit time and motion study calculations. AR# 99005798–06.

Attachment 1
Unit 3 Post Accident Sampling Vent Gaseous Release Worksheet

(Sheet 1 of 1)

3HVR*RE10 Gaseous Activities

Sample date and time: _____

	Printout Activity − Background = Isotope Activity		
Isotope	**Printout Activity (µCi/cc)**	**Background (µCi/cc)**	**Isotope Activity (µCi/cc)**
Total Gaseous Activity (summation of all isotopes) (µCi/cc)			

Prepared by: _____
Signature Date

Level of Use
Continuous

STOP THINK ACT REVIEW

Attachment 2
Unit 3 Post Accident Sampling SLCRS Gaseous Release Worksheet

(Sheet 1 of 1)

3HVR*RE19 Gaseous Activities

Sample date and time: _____

	Printout Activity – Background = Isotope Activity		
Isotope	**Printout Activity (µCi/cc)**	**Background (µCi/cc)**	**Isotope Activity (µCi/cc)**
Total Gaseous Activity (summation of all isotopes) (µCi/cc)			

Prepared by: _____
Signature Date

Level of Use
Continuous

STOP THINK ACT REVIEW

Attachment 3
Unit 3 Post Accident Sampling ESF Gaseous Release Worksheet

(Sheet 1 of 1)

3HVQ–RE49 Gaseous Activities

Sample date and time: _____

	Printout Activity – Background = Isotope Activity		
Isotope	**Printout Activity (µCi/cc)**	**Background (µCi/cc)**	**Isotope Activity (µCi/cc)**
Total Gaseous Activity (summation of all isotopes) (µCi/cc)			

Prepared by: _____
Signature Date

Level of Use
Continuous

STOP THINK ACT REVIEW

Attachment 4
Unit 3 Post Accident Sampling Vent (Normal) Particulate and Iodine Release Worksheet

(Sheet 1 of 2)

3HVR*RE10B

Sample date and time: _____ Sample period: _____ hours

Average sample flow rate: _____ ft^3/min • 60 minutes/hr = _____ ft^3/hr

Sample volume = average sample flow rate in ft^3/hr • sample period in hours • 28,316 cc/ft^3

Sample volume = _____ • _____ • 28,316 cc/ft^3 = _____ cc

Iodine			
	Printout Activity − Background = Isotope Activity		
Isotope	Printout Activity (µCi/cc)	Background (µCi/cc)	Isotope Activity (µCi/cc)
I−131			
I−132			
I−133			
I−134			
I−135			
Total Iodine Activity (summation of all isotopes) (µCi/cc)			
x Plateout Correction [Ref. 6.10]			x 10
Corrected Total Iodine Activity (µCi/cc)			

Prepared by: _____
Signature Date

Attachment 4
Unit 3 Post Accident Sampling Vent (Normal) Particulate and Iodine Release Worksheet
(Sheet 2 of 2)

3HVR*RE10B

Particulate			
	Printout Activity − Background = Isotope Activity		
Isotope	Printout Activity (µCi/cc)	Background (µCi/cc)	Isotope Activity (µCi/cc)
Total Particulate Activity (summation of all isotopes) (µCi/cc)			
x Plateout Correction [Ref. 6.10]			x 2
Corrected Total Particulate Activity (µCi/cc)			

Prepared by: _____
Signature Date

Attachment 5
Unit 3 Post Accident Sampling SLCRS (Normal) Particulate and Iodine Release Worksheet

(Sheet 1 of 2)

3HVR*RE19B

Sample date and time: _____ Sample period: _____ hours

Average sample flow rate: _____ ft^3/min • 60 minutes/hr = _____ ft^3/hr

Sample volume = average sample flow rate in ft^3/hr • sample period in hours • 28,316 cc/ft^3

Sample volume = _____ • _____ • 28,316 cc/ft^3 = _____ cc

Iodine			
	Printout Activity − Background = Isotope Activity		
Isotope	**Printout Activity (µCi/cc)**	**Background (µCi/cc)**	**Isotope Activity (µCi/cc)**
I−131			
I−132			
I−133			
I−134			
I−135			
Total Iodine Activity (summation of all isotopes) (µCi/cc)			
x Plateout Correction [Ref. 6.10]			**x 10**
Corrected Total Iodine Activity (µCi/cc)			

Prepared by: _____
Signature Date

Attachment 5
Unit 3 Post Accident Sampling SLCRS (Normal)
Particulate and Iodine Release Worksheet

(Sheet 2 of 2)

3HVR*RE19B

Particulate			
	Printout Activity − Background = Isotope Activity		
Isotope	Printout Activity (µCi/cc)	Background (µCi/cc)	Isotope Activity (µCi/cc)
Total Particulate Activity (summation of all isotopes) (µCi/cc)			
x Plateout Correction [Ref. 6.10]			x 2
Corrected Total Particulate Activity (µCi/cc)			

Prepared by: _____
Signature Date

Level of Use
Continuous

STOP THINK ACT REVIEW

Attachment 6
Unit 3 Post Accident Sampling ESF
Particulate and Iodine Release Worksheet

(Sheet 1 of 2)

3HVQ−RE49

Sample date and time: _____ Sample period: _____ hours

Average sample flow rate: _____ ft^3/min • 60 minutes/hr = _____ ft^3/hr

Sample volume = average sample flow rate in ft^3/hr • sample period in hours • 28,316 cc/ft^3

Sample volume = _____ • _____ • 28,316 cc/ft^3 = _____ cc

Iodine			
	Printout Activity − Background = Isotope Activity		
Isotope	Printout Activity (µCi/cc)	Background (µCi/cc)	Isotope Activity (µCi/cc)
I−131			
I−132			
I−133			
I−134			
I−135			
Total Iodine Activity (summation of all isotopes) (µCi/cc)			
x Plateout Correction [Ref. 6.10]			x 10
Corrected Total Iodine Activity (µCi/cc)			

Prepared by: _____
Signature Date

Attachment 6
Unit 3 Post Accident Sampling ESF
Particulate and Iodine Release Worksheet

(Sheet 2 of 2)

3HVQ–RE49

Particulate			
	Printout Activity – Background = Isotope Activity		
Isotope	Printout Activity (µCi/cc)	Background (µCi/cc)	Isotope Activity (µCi/cc)
Total Particulate Activity (summation of all isotopes) (µCi/cc)			
x Plateout Correction [Ref. 6.10]			x 2
Corrected Total Particulate Activity (µCi/cc)			

Prepared by: _____
Signature Date

Level of Use
Continuous

STOP THINK ACT REVIEW

Attachment 7
Unit 3 Post Accident Sampling Vent (High Range) Particulate and Iodine Release Worksheet

(Sheet 1 of 2)

3HVR*RE10A

Channel number (circle one): 3 4 5

Sample date and time: _____ Sample period: _____ hours

Sample volume: _____ cc

Iodine			
	Printout Activity − Background = Isotope Activity		
Isotope	Printout Activity (µCi/cc)	Background (µCi/cc)	Isotope Activity (µCi/cc)
I−131			
I−132			
I−133			
I−134			
I−135			
Total Iodine Activity (summation of all isotopes) (µCi/cc)			
x Plateout Correction [Ref. 6.10]			x 10
Corrected Total Iodine Activity (µCi/cc)			

Prepared by: _____
Signature Date

Attachment 7
Unit 3 Post Accident Sampling Vent (High Range) Particulate and Iodine Release Worksheet
(Sheet 2 of 2)

3HVR*RE10A

Particulate			
	Printout Activity − Background = Isotope Activity		
Isotope	Printout Activity (µCi/cc)	Background (µCi/cc)	Isotope Activity (µCi/cc)
Total Particulate Activity (summation of all isotopes) (µCi/cc)			
x Plateout Correction [Ref. 6.10]			x 2
Corrected Total Particulate Activity (µCi/cc)			

Prepared by: _____
Signature Date

Level of Use
Continuous

STOP THINK ACT REVIEW

Attachment 8
Unit 3 Post Accident Sampling SLCRS (High Range) Particulate and Iodine Release Worksheet

(Sheet 1 of 2)

3HVR*RE19A

Channel number (circle one): 3 4 5

Sample date and time: _____ Sample period: _____ hours

Sample volume: _____ cc

Iodine			
	Printout Activity − Background = Isotope Activity		
Isotope	Printout Activity (µCi/cc)	Background (µCi/cc)	Isotope Activity (µCi/cc)
I−131			
I−132			
I−133			
I−134			
I−135			
Total Iodine Activity (summation of all isotopes) (µCi/cc)			
x Plateout Correction [Ref. 6.10]			x 10
Corrected Total Iodine Activity (µCi/cc)			

Prepared by: _____
Signature Date

Attachment 8
Unit 3 Post Accident Sampling SLCRS (High Range) Particulate and Iodine Release Worksheet

(Sheet 2 of 2)

3HVR*RE19A

Particulate			
	Printout Activity − Background = Isotope Activity		
Isotope	Printout Activity (µCi/cc)	Background (µCi/cc)	Isotope Activity (µCi/cc)
Total Particulate Activity (summation of all isotopes) (µCi/cc)			
x Plateout Correction [Ref. 6.10]			x 2
Corrected Total Particulate Activity (µCi/cc)			

Prepared by: _____
Signature Date

Level of Use
Continuous

STOP THINK ACT REVIEW

Attachment 9
Cartridge Holder Configuration
(Sheet 1 of 1)

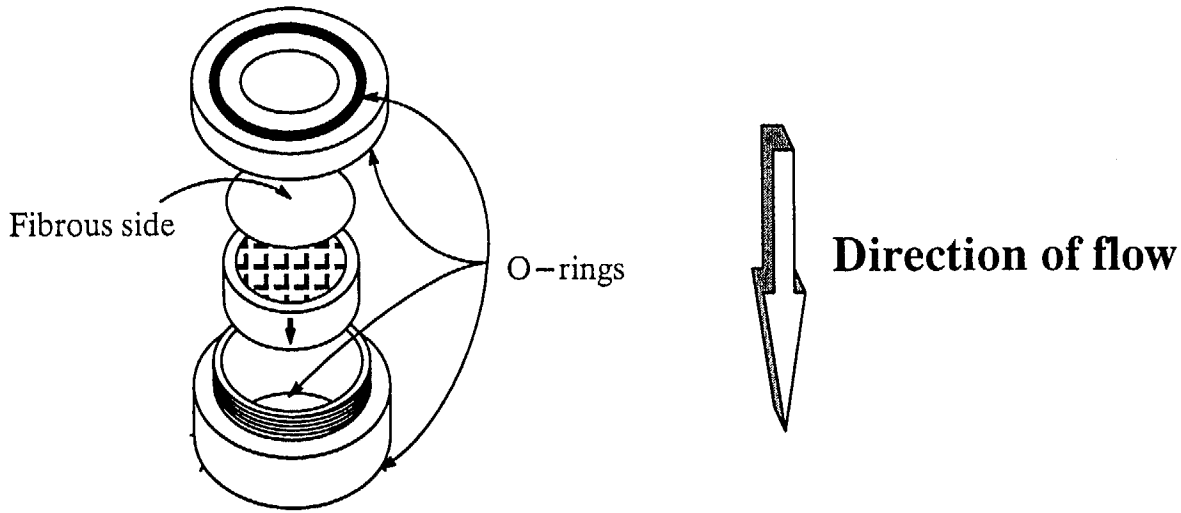

Attachment 10
3HVQ–RE49 Filter Housing Configuration
(Sheet 1 of 1)