Table of Contents

2.0 PRINCIPAL DESIGN CRITERIA 2-1

2.1 Spent Fuel To Be Stored 2.1-1
2.1.1 PWR Bounding Fuel Evaluation 2.1.1-1
2.1.1.1 Standard Configuration 2.1.1-1
2.1.1.2 Advanced Configuration 2.1.1-4
2.1.2 BWR Bounding Fuel Evaluation 2.1.2-1
2.1.2.1 Standard Configuration 2.1.2-1
2.1.3 Site Specific Spent Fuel 2.1.3-1
2.1.3.1 Maine Yankee Site Specific Spent Fuel 2.1.3-1

2.2 Design Criteria for Environmental Conditions and Natural Phenomena 2.2-1
2.2.1 Tornado and Wind Loadings 2.2-1
2.2.1.1 Applicable Design Parameters 2.2-1
2.2.1.2 Determination of Forces on Structures 2.2-2
2.2.1.3 Tornado Missiles 2.2-2
2.2.2 Water Level (Flood) Design 2.2-3
2.2.2.1 Flood Elevations 2.2-3
2.2.2.2 Phenomena Considered in Design Load Calculations 2.2-3
2.2.2.3 Flood Force Application 2.2-3
2.2.2.4 Flood Protection 2.2-4
2.2.3 Seismic Design 2.2-4
2.2.3.1 Input Criteria 2.2-4
2.2.3.2 Seismic - System Analyses 2.2-4
2.2.4 Snow and Ice Loadings 2.2-5
2.2.5 Combined Load Criteria 2.2-6
2.2.5.1 Load Combinations and Design Strength -Vertical Concrete Cask 2.2-6
2.2.5.2 Load Combinations and Design Strength - Canister and Basket 2.2-6
2.2.5.3 Design Strength - Transfer Cask 2.2-7
2.2.6 Environmental Temperatures 2.2-7

Table of Contents (Continued)

2.3 Safety Protection Systems 2.3-1
2.3.1 General 2.3-1
2.3.2 Protection by Multiple Confinement Barriers and Systems 2.3-2
2.3.2.1 Confinement Barriers and Systems 2.3-2
2.3.2.2 Cask Cooling 2.3-3
2.3.3 Protection by Equipment and Instrumentation Selection 2.3-3
2.3.3.1 Equipment 2.3-4
2.3.3.2 Instrumentation 2.3-5
2.3.4 Nuclear Criticality Safety 2.3-5
2.3.4.1 Control Methods for Prevention of Criticality 2.3-5
2.3.4.2 Error Contingency Criteria 2.3-7
2.3.4.3 Verification Analyses 2.3-7
2.3.5 Radiological Protection 2.3-7
2.3.5.1 Access Control 2.3-8
2.3.5.2 Shielding 2.3-8
2.3.5.3 Ventilation Off-Gas 2.3-8
2.3.5.4 Radiological Alarm Systems 2.3-9
2.3.6 Fire and Explosion Protection 2.3-10
2.3.6.1 Fire Protection 2.3-10
2.3.6.2 Explosion Protection 2.3-10
2.3.7 Ancillary Structures 2.3-10

2.4 Decommissioning Considerations 2.4-1

2.5 References 2.5-1

List of Figures

Figure 2.1.1.2-1 Maximum Allowable Assembly Heat Load by Advanced PWR Canister Zone 2.1.1-5

Figure 2.1.3.1-1 Preferential Loading Diagram for Maine Yankee Site Specific Spent Fuel 2.1.3-9

List of Tables

Table 2-1 Summary of Universal Storage System Design Criteria 2-2
Table 2.1.1.1-1 PWR Fuel Assembly Characteristics – Standard Configuration 2.1.1-2
Table 2.1.1.1-2 Loading Table for PWR Fuel – Standard Configuration 2.1.1-3
Table 2.1.1.2-1 Advanced PWR Fuel Assembly Characteristics 2.1.1-6
Table 2.1.1.2-2 Loading Table for PWR Fuel in the Advanced Basket for Assembly Heat Loads ≤ 700 W 2.1.1-7
Table 2.1.1.2-3 Loading Table for PWR Fuel in the Advanced Basket for Assembly Heat Loads ≤ 1,000 W 2.1.1-9
Table 2.1.1.2-4 Loading Table for PWR Fuel in the Advanced Basket for Assembly Heat Loads ≤ 1,100 W 2.1.1-11
Table 2.1.2.1-1 Standard BWR Fuel Assembly Characteristics 2.1.2-2
Table 2.1.2.1-2 Standard Loading Table for BWR Fuel 2.1.2-3
Table 2.1.3.1-1 Maine Yankee Site Specific Fuel Population 2.1.3-10
Table 2.1.3.1-2 Maine Yankee Fuel Can Design and Fabrication Specification Summary 2.1.3-11
Table 2.1.3.1-3 Major Physical Design Parameters of the Maine Yankee Fuel Can 2.1.3-12
Table 2.2-1 Load Combinations for the Vertical Concrete Cask 2.2-9
Table 2.2-2 Load Combinations for the Transportable Storage Canister 2.2-10
Table 2.2-3 Structural Design Criteria for Components Used in the Transportable Storage Canister 2.2-11
Table 2.3-1 Safety Classification of Universal Storage System Components 2.3-12
Table 2.4-1 Activity Concentration Summary for the Concrete Cask - PWR Design Basis Fuel (Ci/m^3) for the Standard Configuration 2.4-3
Table 2.4-2 Activity Concentration Summary for the Canister - PWR Design Basis Fuel (Ci/m^3) for the Standard Configuration 2.4-3
Table 2.4-3 Activity Concentration Summary for the Concrete Cask - BWR Design Basis Fuel (Ci/m^3) for the Standard Configuration 2.4-4
Table 2.4-4 Activity Concentration Summary for the Canister - BWR Design Basis Fuel (Ci/m^3) for the Standard Configuration 2.4-4
Table 2.4-5 Activity Concentration Summary for the Concrete Cask - PWR Design Basis Fuel (Ci/m^3) for the Advanced Configuration 2.4-5

2.0 PRINCIPAL DESIGN CRITERIA

The Universal Storage System is a canister-based spent fuel dry storage cask system that is designed to be compatible with the Universal Transportation System. It is designed to store a variety of PWR and BWR fuel assemblies. This chapter presents the design bases, including the principal design criteria, limiting load conditions, and operational parameters of the Universal Storage System. The principal design criteria are summarized in Table 2-1.

Table 2-1 Summary of Universal Storage System Design Criteria

Parameter	Criteria
Design Life	50 years
Design Code - Confinement	ASME Code, Section III, Subsection NB [1] for confinement boundary
Design Code - Nonconfinement	
Basket	ASME Code, Section III, Subsection NG [2] and NUREG/CR-6322 [3]
Vertical Concrete Cask	ACI-349 [4], ACI-318 [5]
Transfer Cask	ANSI N14.6 [6] and NUREG-0612 [7]
Maximum Weight:	
Standard Canister with Design Basis PWR Fuel Assembly (dry, including inserts) (Class 2)	72,927 lbs.
Advanced Canister with Design Basis PWR Fuel Assembly (dry, including inserts) (Class 2)	87,200 lbs.
Standard Canister with Design Basis BWR Fuel (dry) (Class 5)	75,896 lbs.
Standard Vertical Concrete Cask (loaded) (Class 5)	312,210 lbs.
Advanced Vertical Concrete Cask (loaded) (Class 3)	327,900 lbs.
Standard/Advanced Transfer Cask (Class 3)	120,010 lbs.
100-Ton Transfer Cask (Class 3)	98,200 lbs.
Thermal:	
Maximum Fuel Cladding Temperature:	
PWR Fuel in Standard Canister	Variable Based on Fuel Type, Burnup and Cool Time. See Table 4.4.7.1-5 for Temperature Limits. 1058°F (570°C) Off-Normal/Accident/Transfer [21]
BWR Fuel in Standard Canister	Variable Based on Fuel Type, Burnup and Cool Time. See Table 4.4.7.1-5 for Temperature Limits. 1058°F (570°C) Off-Normal/Accident/Transfer [21]
PWR Fuel in Advanced Canister	734°F (390°C) for Normal conditions 1058°F (570°C) for Off-Normal, Accident and Transfer conditions.
Ambient Temperature:	
Normal (average annual ambient)	76°F
Off-Normal (extreme cold; extreme hot)	-40°F; 106°F
Accident	133°F
Concrete Temperature:	
Normal Conditions	≤ 150°F (bulk); ≤ 300°F (local) [4]
Off-Normal/Accident Conditions	≤ 350°F local/ surface [4]
Cavity Atmosphere	Helium

Table 2-1 Summary of Universal Storage System Design Criteria (Continued)

Radiation Protection/Shielding	**Criteria**
Concrete Cask Side Wall Contact Dose Rate	< 50 mrem/hr. (avg)
Concrete Cask Top Lid Contact Dose Rate	< 100 mrem/hr. (avg)
Concrete Cask Air Inlet Dose Rate	< 100 mrem/hr. (max)
Concrete Cask Air Outlet Dose Rate	< 300 mrem/hr. (max)
Owner Controlled Area Boundary Dose [11]	
Normal/Off-Normal Conditions	25 mrem (Annual Whole Body)
Accident Whole Body Dose	5 rem (Whole Body)

THIS PAGE INTENTIONALLY LEFT BLANK

2.1 Spent Fuel To Be Stored

The Universal Storage System is designed to safely store up to 24 PWR, or up to 56 BWR spent fuel assemblies, in a Standard Transportable Storage Canister, or up to 32 PWR spent fuel assemblies in an Advanced Transportable Storage Canister. Each Standard canister is specifically designed to accommodate one of three classes of PWR fuel assemblies or one of two classes of BWR fuel assemblies. Each Advanced canister is specifically designed to accommodate one of three class of PWR fuel assemblies. The class of the fuel assemblies is based, primarily on fuel assembly length, and is shown in Tables 6.2.1-1 and 6.2.1-2 for the Standard configuration, and in Table 6.2.2-1 for the Advanced Configuration.

The PWR and BWR fuel having the parameters shown in Tables 2.1.1.1-1 and 2.1.2.1-1, respectively, may be stored in the Standard Universal Storage System. PWR fuel having the parameters shown in Table 2.1.1.2-1 may be stored in the Advanced Universal Storage System. As shown in Table 12B2-1, the evaluation of PWR fuel includes fuel having thimble plugs and burnable poison rods in guide tube positions. As shown in Table 2.1.2.1-1, the BWR fuel evaluation includes fuel with a Zircaloy channel. Any empty fuel rod position must be filled with a solid filler rod fabricated from either Zircaloy or Type 304 stainless steel, or may be solid neutron absorber rods inserted for in-core reactivity control prior to reactor operation.

In addition to the design basis fuel, fuel that is unique to a reactor site, referred to as site specific spent fuel, is also evaluated. Site specific spent fuel consists of fuel assemblies that are configured differently, or have different parameters (such as enrichment or burnup), than the design basis fuel assemblies.

Site specific spent fuel is described in Section 2.1.3.

Site specific spent fuel is shown to be bounded by the fuel parameters shown in Tables 2.1.1.1-1, 2.1.1.2-1 or 2.1.2.1-1, or it is separately evaluated.

The minimum initial enrichment limits are shown in Tables 2.1.1.1-2, 2.1.1.2-2 and 2.1.2.1-2 for PWR and BWR fuel. The minimum enrichment limits exclude the loading of fuel assemblies enriched to less than 1.9 wt.% ^{235}U, including unenriched fuel assemblies, into the Transportable Storage Canister. However, fuel assemblies with unenriched axial end-blankets may be loaded into the canister.

THIS PAGE INTENTIONALLY LEFT BLANK

2.1.1 PWR Bounding Fuel Evaluation

2.1.1.1 Standard Configuration

The parameters of the PWR fuel assemblies that may be loaded in the Standard canister are shown in Table 2.1.1.1-1. Each canister may contain up to 24 intact PWR fuel assemblies.

The design of the Universal Storage System is based on certain reference fuel assemblies that maximize the source terms used for the shielding and criticality evaluation, and that maximize the weight used in the structural evaluation. These reference fuel assemblies are described in the chapters appropriate to the condition being evaluated. The principal characteristics and parameters of a reference fuel, such as fuel volume, initial enrichment, cool time and burnup, do not represent limiting or bounding values. Bounding values for a fuel class are established based primarily on how principal parameters are combined and on the loading conditions or restrictions established for a class of fuel based on its parameters.

The maximum decay heat load for Standard configuration storage of all types of PWR fuel assemblies is 23.0 kW (0.959 kW/assembly). However, the allowable assembly decay heat load decreases with longer cool times, reflecting the corresponding reduction in allowable cladding temperature, as shown:

Cooling Time (C)	**PWR Burnup (B) [GWD/MTU]**		
Years	B ≤35	35< B ≤40	40< B ≤45
C = 5	0.959 kW	0.959 kW	0.959 kW
5< C ≤6	0.934 kW	0.921 kW	0.913 kW
6< C ≤7	0.842 kW	0.838 kW	0.834 kW
7< C ≤10	0.821 kW	0.817 kW	0.813 kW
10< C ≤15	0.796 kW	0.792 kW	0.788 kW

The cool times shown are based on a variable temperature bias to the allowable cladding temperature.

The minimum cool time as a function of assembly array size, minimum enrichment and maximum burnup is shown in the loading table for PWR fuel Table 2.1.1.1-2. Minimum cool time is based on the maximum decay heat load (23.0 kW) and the dose rate limits for the concrete and transfer casks.

Site specific fuel that does not meet the enrichment and burnup limits of this section and Table 2.1.1.1-1, is separately evaluated in Section 2.1.3 to establish loading limits.

Table 2.1.1.1-1 PWR Fuel Assembly Characteristics – Standard Configuration

Fuel Class[1]	Vendor[2]	Array	Max. MTU	No of Fuel Rods	Max. Pitch (in)	Min. Rod Dia. (in)	Min. Clad Thick (in)	Max. Pellet Dia.(in)	Maximum Active Length (in)	Min. Guide Tube Thick (in)
1	CE	14 × 14	0.404	176	0.590	0.438	0.024	0.380	137.0	0.040
1	Ex/ANF	14 × 14	0.369	179	0.556	0.424	0.030	0.351	142.0	0.034
1	WE	14 × 14	0.362	179	0.556	0.400	0.024	0.345	144.0	0.034
1	WE	14 × 14	0.415	179	0.556	0.422	0.022	0.368	145.2	0.034
1	WE, Ex/ANF	15 × 15	0.465	204	0.563	0.422	0.024	0.366	144.0	0.015
1	Ex/ANF	17 × 17	0.413	264	0.496	0.360	0.025	0.303	144.0	0.016
1	WE	17 × 17	0.468	264	0.496	0.374	0.022	0.323	144.0	0.016
1	WE	17 × 17	0.429	264	0.496	0.360	0.022	0.309	144.0	0.016
2	B&W	15 × 15	0.481	208	0.568	0.430	0.026	0.369	144.0	0.016
2	B&W	17 × 17	0.466	264	0.502	0.379	0.024	0.324	143.0	0.017
3	CE	16 × 16	0.442	236	0.506	0.382	0.023	0.3255	150.0	0.035
1	Ex/ANF[3]	14 × 14	0.375	179	0.556	0.417	0.030	0.351	144.0	0.036
1	CE[3]	15 × 15	0.432	216	0.550	0.418	0.026	0.358	132.0	----
1	Ex/ANF[3]	15 × 15	0.431	216	0.550	0.417	0.030	0.358	131.8	----
1	CE[3]	16 × 16	0.403	236	0.506	0.382	0.023	0.3255	136.7	0.035

1. Maximum Initial Enrichment: 4.2 wt % ^{235}U. All fuel rods are Zircaloy clad.
2. Vendor ID indicates the source of assembly base parameters. Loading of assemblies meeting above limits is not restricted to the vendor(s) listed.
3. 14×14, 15×15 and 16×16 fuel manufactured for Prairie Island, Palisades and St. Lucie 2 cores, respectively. These are not generic fuel assemblies provided to multiple reactors.

Table 2.1.1.1-2 Loading Table for PWR Fuel – Standard Configuration

Minimum Initial Enrichment wt % ^{235}U (E)	Burnup ≤30 GWD/MTU Minimum Cooling Time [years]				30< Burnup ≤35 GWD/MTU Minimum Cooling Time [years]			
	14×14	15×15	16×16	17×17	14×14	15×15	16×16	17×17
1.9 ≤ E < 2.1	5	5	5	5	7	7	5	7
2.1 ≤ E < 2.3	5	5	5	5	7	6	5	6
2.3 ≤ E < 2.5	5	5	5	5	6	6	5	6
2.5 ≤ E < 2.7	5	5	5	5	6	6	5	6
2.7 ≤ E < 2.9	5	5	5	5	6	5	5	5
2.9 ≤ E < 3.1	5	5	5	5	5	5	5	5
3.1 ≤ E < 3.3	5	5	5	5	5	5	5	5
3.3 ≤ E < 3.5	5	5	5	5	5	5	5	5
3.5 ≤ E < 3.7	5	5	5	5	5	5	5	5
3.7 ≤ E ≤ 4.2	5	5	5	5	5	5	5	5

Minimum Initial Enrichment wt % ^{235}U (E)	35< Burnup ≤40 GWD/MTU Minimum Cooling Time [years]				40< Burnup ≤45 GWD/MTU Minimum Cooling Time [years]			
	14×14	15×15	16×16	17×17	14×14	15×15	16×16	17×17
1.9 ≤ E < 2.1	10	10	7	10	15	15	11	15
2.1 ≤ E < 2.3	9	9	7	9	14	13	10	13
2.3 ≤ E < 2.5	8	8	6	8	12	13	10	12
2.5 ≤ E < 2.7	8	8	6	8	11	13	10	12
2.7 ≤ E < 2.9	7	8	6	8	10	12	9	12
2.9 ≤ E < 3.1	7	8	6	8	9	12	9	11
3.1 ≤ E < 3.3	6	8	6	7	8	12	9	10
3.3 ≤ E < 3.5	6	8	6	7	8	12	9	10
3.5 ≤ E < 3.7	6	8	6	6	8	11	9	10
3.7 ≤ E ≤ 4.2	6	7	6	6	8	10	9	10

2.1.1.2 Advanced Configuration

The parameters of the PWR fuel assemblies that may be loaded in the Advanced canister are shown in Table 2.1.1.2-1. Each canister may contain up to 32 intact PWR fuel assemblies.

The design of the Universal Storage System is based on certain reference fuel assemblies that maximize the source terms used for the shielding and criticality evaluation, and that maximize the weight used in the structural evaluation. These reference fuel assemblies are described in the chapters appropriate to the condition being evaluated. The principal characteristics and parameters of a reference fuel, such as fuel volume, initial enrichment, cool time and burnup, do not represent limiting or bounding values. Bounding values for a fuel class are established based primarily on how principal parameters are combined and on the loading conditions or restrictions established for a class of fuel based on its parameters.

The maximum decay heat load for the storage of all types of PWR fuel assemblies is 29.2 kW (12 assemblies at 0.7 kW, 12 assemblies at 1.0 kW and 8 assemblies at 1.1 kW) based on a three-zone loading pattern. The loading zones are shown in Figure 2.1.1.2-1. The maximum heat load in each zone is 8.4, 12 and 8.8 kW.

The minimum cool time for each maximum heat load as a function of assembly array size, minimum enrichment and maximum burnup for PWR fuel is shown in Tables 2.1.1.2-2 through 2.1.1.2-4. Minimum cool time is based on the maximum decay heat load per zone.

PWR fuel stored in the Advanced configuration is evaluated for burnup up to 55,000 MWD/MTU. The high burnup fuel is loaded in accordance with loading tables based on the fuel assembly heat load (see Figure 2.1.1.2-1).

Figure 2.1.1.2-1 Maximum Allowable Assembly Heat Load by Advanced PWR Canister Zone

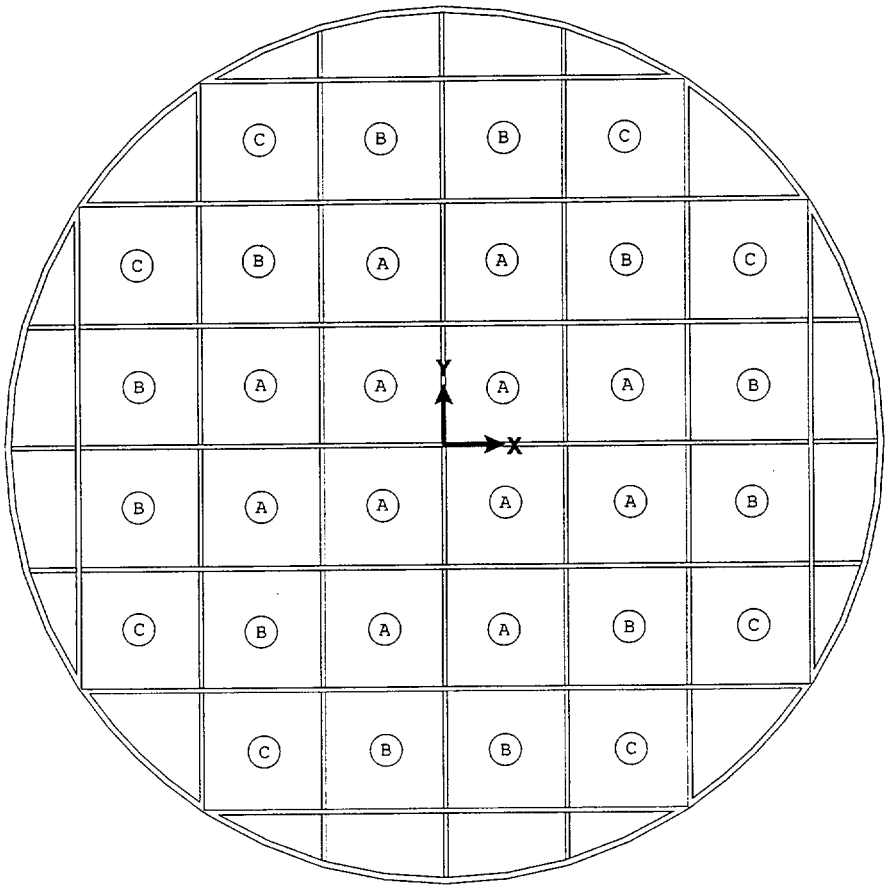

Advanced Canister	Zone A	Zone B	Zone C
Maximum Allowed Heat Load per Assembly	≤ 0.7 kW	≤ 1.0 kW	≤ 1.1 kW

Table 2.1.1.2-1 Advanced PWR Fuel Assembly Characteristics

Fuel Class	Array[1,2,3]	Max. MTU	No of Fuel Rods[4]	Max. Pitch (in)	Min. Rod Dia. (in)	Min. Clad Thick (in)[5]	Max. Pellet Dia.(in)	Max. Active Length (in)	Min. Guide Tube Thick (in)
1	14×14	0.4124	176	0.5800	0.440	0.0260	0.3805	137.0	0.036
1	14×14	0.3873	176	0.5800	0.440	0.0260	0.3815	128.0	0.026
1	14×14	0.3741	179	0.5560	0.400	0.0243	0.3505	144.0	0.017
1	14×14	0.4144	179	0.5560	0.417	0.0218	0.3674	145.2	0.017
1	15×15	0.4423	204	0.5630	0.417	0.0265	0.3570	144.0	0.017
1	15×15	0.4671	204	0.5630	0.422	0.0242	0.3669	144.0	0.015
1	15×15	0.4341	216	0.5500	0.415	0.0240	0.3590	132.0	0.0165
1	16×16	0.4025	236	0.5060	0.382	0.0250	0.3250	136.7	0.026
1	17×17	0.4282	264	0.4960	0.360	0.0225	0.3088	144.0	0.015
1	17×17	0.4691	264	0.4960	0.372	0.0205	0.3232	144.0	0.014
2	15×15	0.4807	208	0.5680	0.430	0.0265	0.3686	144.0	0.016
2	15×15	0.4954	208	0.5680	0.428	0.0230	0.3742	144.0	0.014
2	15×15	0.4642	208	0.5680	0.414	0.0220	0.3622	144.0	0.014
2	17×17	0.4749	264	0.5020	0.377	0.0220	0.3252	144.0	0.0175
3	16×16	0.4417	236	0.5063	0.382	0.0250	0.3250	150.0	0.035

1. Maximum initial enrichment up to 4.6 wt % ^{235}U with a boron concentration of 2,000 ppm in pool and canister water. For enrichments greater than 4.6 wt % ^{235}U, a boron concentration of 2,300 ppm is required.
2. Fuel assembly parameters are based on bounding values that may not correspond to the parameters of a specific assembly.
3. Assemblies meeting these limits may contain a flow mixer, an ICI thimble, or a burnable poison rod insert.
4. Some fuel rod positions may be occupied by burnable poison rods or solid filler rods.
5. All fuel rods are Zircaloy clad.

Table 2.1.1.2-2 Loading Table for PWR Fuel in the Advanced Basket for Assembly Heat Loads ≤ 700 W

Minimum Initial Enrichment wt % ^{235}U (E)	Burnup ≤30 GWD/MTU Minimum Cooling Time [years]				30< Burnup ≤35 GWD/MTU Minimum Cooling Time [years]			
	14x14	15x15	16x16	17x17	14x14	15x15	16x16	17x17
1.7 ≤ E < 1.9	6	7	6	7	7	9	7	8
1.9 ≤ E < 2.1	6	6	6	6	7	8	7	8
2.1 ≤ E < 2.3	6	6	6	6	7	8	7	8
2.3 ≤ E < 2.5	5	6	6	6	7	8	7	8
2.5 ≤ E < 2.7	5	6	6	6	7	8	7	8
2.7 ≤ E < 2.9	5	6	6	6	6	8	7	8
2.9 ≤ E < 3.1	5	6	6	6	6	8	7	8
3.1 ≤ E < 3.3	5	6	6	6	6	8	7	8
3.3 ≤ E < 3.5	5	6	6	6	6	8	7	8
3.5 ≤ E < 3.7	5	6	6	6	6	8	7	8
3.7 ≤ E < 3.9	5	6	6	6	6	8	7	7
3.9 ≤ E < 4.1	5	6	5	6	6	7	7	7
4.1 ≤ E < 4.3	5	6	5	6	6	7	7	7
4.3 ≤ E < 4.5	5	6	5	6	6	7	7	7
4.5 ≤ E < 4.7	5	6	5	6	6	7	6	7
4.7 ≤ E < 4.9	5	6	5	6	6	7	6	7
E ≥ 4.9	5	6	5	6	6	7	6	7

Minimum Initial Enrichment wt % ^{235}U (E)	35< Burnup ≤40 GWD/MTU Minimum Cooling Time [years]				40< Burnup ≤45 GWD/MTU Minimum Cooling Time [years]			
	14x14	15x15	16x16	17x17	14x14	15x15	16x16	17x17
1.7 ≤ E < 1.9	-	-	-	-	-	-	-	-
1.9 ≤ E < 2.1	9	12	10	12	-	-	-	-
2.1 ≤ E < 2.3	9	12	10	11	-	-	-	-
2.3 ≤ E < 2.5	9	12	9	11	12	17	13	16
2.5 ≤ E < 2.7	8	11	9	11	12	16	13	16
2.7 ≤ E < 2.9	8	11	9	11	11	16	13	16
2.9 ≤ E < 3.1	8	11	9	11	11	16	12	15
3.1 ≤ E < 3.3	8	11	9	10	11	16	12	15
3.3 ≤ E < 3.5	8	11	9	10	11	15	12	15
3.5 ≤ E < 3.7	8	10	9	10	11	15	12	15
3.7 ≤ E < 3.9	8	10	8	10	10	15	12	14
3.9 ≤ E < 4.1	8	10	8	10	10	15	12	14
4.1 ≤ E < 4.3	8	10	8	10	10	15	11	14
4.3 ≤ E < 4.5	8	10	8	10	10	14	11	14
4.5 ≤ E < 4.7	7	10	8	10	10	14	11	14
4.7 ≤ E < 4.9	7	10	8	10	10	14	11	14
E ≥ 4.9	7	10	8	10	10	14	11	14

Note: 700 Watt assemblies may be loaded in all loading positions (Figure 2.1.1.2-1).

Table 2.1.1.2-2 Loading Table for PWR Fuel in the Advanced Basket for Assembly Heat Loads ≤ 700 W (Continued)

Minimum Initial Enrichment wt % ^{235}U (E)	45< Burnup ≤50 GWD/MTU Minimum Cooling Time [years]				50< Burnup ≤55 GWD/MTU Minimum Cooling Time [years]			
	14x14	15x15	16x16	17x17	14x14	15x15	16x16	17x17
1.7 ≤ E < 1.9	-	-	-	-	-	-	-	-
1.9 ≤ E < 2.1	-	-	-	-	-	-	-	-
2.1 ≤ E < 2.3	-	-	-	-	-	-	-	-
2.3 ≤ E < 2.5	-	-	-	-	-	-	-	-
2.5 ≤ E < 2.7	-	-	-	-	-	-	-	-
2.7 ≤ E < 2.9	16	22	18	22	-	-	-	-
2.9 ≤ E < 3.1	16	22	17	21	-	-	-	-
3.1 ≤ E < 3.3	15	22	17	21	21	27	23	27
3.3 ≤ E < 3.5	15	21	17	21	20	27	22	26
3.5 ≤ E < 3.7	15	21	16	20	20	27	22	26
3.7 ≤ E < 3.9	15	21	16	20	20	27	22	26
3.9 ≤ E < 4.1	14	21	16	20	20	26	21	26
4.1 ≤ E < 4.3	14	20	16	20	19	26	21	26
4.3 ≤ E < 4.5	14	20	16	20	19	26	21	25
4.5 ≤ E < 4.7	14	20	16	19	19	26	21	25
4.7 ≤ E < 4.9	14	20	15	19	19	26	21	25
E ≥ 4.9	14	20	15	19	18	26	20	25

Note: 700 Watt assemblies may be loaded in all loading positions (Figure 2.1.1.2-1).

Table 2.1.1.2-3 Loading Table for PWR Fuel in the Advanced Basket for Assembly Heat Loads ≤ 1,000 W

Minimum Initial Enrichment wt % ^{235}U (E)	Burnup ≤30 GWD/MTU Minimum Cooling Time [years]				30< Burnup ≤35 GWD/MTU Minimum Cooling Time [years]			
	14×14	15×15	16×16	17×17	14×14	15×15	16×16	17×17
1.7 ≤ E < 1.9	5	5	5	5	5	6	5	6
1.9 ≤ E < 2.1	5	5	5	5	5	5	5	5
2.1 ≤ E < 2.3	5	5	5	5	5	5	5	5
2.3 ≤ E < 2.5	5	5	5	5	5	5	5	5
2.5 ≤ E < 2.7	5	5	5	5	5	5	5	5
2.7 ≤ E < 2.9	5	5	5	5	5	5	5	5
2.9 ≤ E < 3.1	5	5	5	5	5	5	5	5
3.1 ≤ E < 3.3	5	5	5	5	5	5	5	5
3.3 ≤ E < 3.5	5	5	5	5	5	5	5	5
3.5 ≤ E < 3.7	5	5	5	5	5	5	5	5
3.7 ≤ E < 3.9	5	5	5	5	5	5	5	5
3.9 ≤ E < 4.1	5	5	5	5	5	5	5	5
4.1 ≤ E < 4.3	5	5	5	5	5	5	5	5
4.3 ≤ E < 4.5	5	5	5	5	5	5	5	5
4.5 ≤ E < 4.7	5	5	5	5	5	5	5	5
4.7 ≤ E < 4.9	5	5	5	5	5	5	5	5
E ≥ 4.9	5	5	5	5	5	5	5	5

Minimum Initial Enrichment wt % ^{235}U (E)	35< Burnup ≤40 GWD/MTU Minimum Cooling Time [years]				40< Burnup ≤45 GWD/MTU Minimum Cooling Time [years]			
	14×14	15×15	16×16	17×17	14×14	15×15	16×16	17×17
1.7 ≤ E < 1.9	-	-	-	-	-	-	-	-
1.9 ≤ E < 2.1	6	7	6	7	-	-	-	-
2.1 ≤ E < 2.3	6	6	6	6	-	-	-	-
2.3 ≤ E < 2.5	5	6	6	6	6	8	7	8
2.5 ≤ E < 2.7	5	6	6	6	6	8	7	8
2.7 ≤ E < 2.9	5	6	6	6	6	8	7	7
2.9 ≤ E < 3.1	5	6	6	6	6	7	7	7
3.1 ≤ E < 3.3	5	6	6	6	6	7	7	7
3.3 ≤ E < 3.5	5	6	5	6	6	7	6	7
3.5 ≤ E < 3.7	5	6	5	6	6	7	6	7
3.7 ≤ E < 3.9	5	6	5	6	6	7	6	7
3.9 ≤ E < 4.1	5	6	5	6	6	7	6	7
4.1 ≤ E < 4.3	5	6	5	6	6	7	6	7
4.3 ≤ E < 4.5	5	6	5	6	6	7	6	7
4.5 ≤ E < 4.7	5	6	5	6	6	7	6	7
4.7 ≤ E < 4.9	5	6	5	6	6	7	6	7
E ≥ 4.9	5	6	5	6	6	7	6	7

Note: Assemblies with Heat Loads 700 W < HL ≤ 1,000 W are restricted to Zone B loading positions (Figure 2.1.1.2-1).

Table 2.1.1.2-3 Loading Table for PWR Fuel in the Advanced Basket for Assembly Heat Loads ≤ 1,000 W (Continued)

Minimum Initial Enrichment wt % ^{235}U (E)	45< Burnup ≤50 GWD/MTU Minimum Cooling Time [years]				50< Burnup ≤55 GWD/MTU Minimum Cooling Time [years]			
	14×14	15×15	16×16	17×17	14×14	15×15	16×16	17×17
1.7 ≤ E < 1.9	-	-	-	-	-	-	-	-
1.9 ≤ E < 2.1	-	-	-	-	-	-	-	-
2.1 ≤ E < 2.3	-	-	-	-	-	-	-	-
2.3 ≤ E < 2.5	-	-	-	-	-	-	-	-
2.5 ≤ E < 2.7	-	-	-	-	-	-	-	-
2.7 ≤ E < 2.9	8	10	8	10	-	-	-	-
2.9 ≤ E < 3.1	7	10	8	9	-	-	-	-
3.1 ≤ E < 3.3	7	9	8	9	9	13	10	12
3.3 ≤ E < 3.5	7	9	8	9	9	12	10	12
3.5 ≤ E < 3.7	7	9	8	9	9	12	10	12
3.7 ≤ E < 3.9	7	9	8	9	9	12	9	11
3.9 ≤ E < 4.1	7	9	7	9	8	12	9	11
4.1 ≤ E < 4.3	7	9	7	8	8	11	9	11
4.3 ≤ E < 4.5	7	9	7	8	8	11	9	11
4.5 ≤ E < 4.7	7	8	7	8	8	11	9	11
4.7 ≤ E < 4.9	7	8	7	8	8	11	9	11
E ≥ 4.9	7	8	7	8	8	11	9	10

Note: Assemblies with Heat Loads 700 W < HL ≤ 1,000 W are restricted to Zone B loading positions (Figure 2.1.1.2-1).

Table 2.1.1.2-4 Loading Table for PWR Fuel in the Advanced Basket for Assembly Heat Loads ≤ 1,100 W

Minimum Initial Enrichment wt % ^{235}U (E)	Burnup ≤30 GWD/MTU Minimum Cooling Time [years]				30< Burnup ≤35 GWD/MTU Minimum Cooling Time [years]			
	14x14	15x15	16x16	17x17	14x14	15x15	16x16	17x17
1.7 ≤ E < 1.9	5	5	5	5	5	5	5	5
1.9 ≤ E < 2.1	5	5	5	5	5	5	5	5
2.1 ≤ E < 2.3	5	5	5	5	5	5	5	5
2.3 ≤ E < 2.5	5	5	5	5	5	5	5	5
2.5 ≤ E < 2.7	5	5	5	5	5	5	5	5
2.7 ≤ E < 2.9	5	5	5	5	5	5	5	5
2.9 ≤ E < 3.1	5	5	5	5	5	5	5	5
3.1 ≤ E < 3.3	5	5	5	5	5	5	5	5
3.3 ≤ E < 3.5	5	5	5	5	5	5	5	5
3.5 ≤ E < 3.7	5	5	5	5	5	5	5	5
3.7 ≤ E < 3.9	5	5	5	5	5	5	5	5
3.9 ≤ E < 4.1	5	5	5	5	5	5	5	5
4.1 ≤ E < 4.3	5	5	5	5	5	5	5	5
4.3 ≤ E < 4.5	5	5	5	5	5	5	5	5
4.5 ≤ E < 4.7	5	5	5	5	5	5	5	5
4.7 ≤ E < 4.9	5	5	5	5	5	5	5	5
E ≥ 4.9	5	5	5	5	5	5	5	5

Minimum Initial Enrichment wt % ^{235}U (E)	35< Burnup ≤40 GWD/MTU Minimum Cooling Time [years]				40< Burnup ≤45 GWD/MTU Minimum Cooling Time [years]			
	14x14	15x15	16x16	17x17	14x14	15x15	16x16	17x17
1.7 ≤ E < 1.9	-	-	-	-	-	-	-	-
1.9 ≤ E < 2.1	5	6	5	6	-	-	-	-
2.1 ≤ E < 2.3	5	6	5	6	-	-	-	-
2.3 ≤ E < 2.5	5	6	5	6	6	7	6	7
2.5 ≤ E < 2.7	5	6	5	6	6	7	6	7
2.7 ≤ E < 2.9	5	6	5	6	6	7	6	7
2.9 ≤ E < 3.1	5	6	5	6	6	7	6	7
3.1 ≤ E < 3.3	5	5	5	5	5	6	6	6
3.3 ≤ E < 3.5	5	5	5	5	5	6	6	6
3.5 ≤ E < 3.7	5	5	5	5	5	6	6	6
3.7 ≤ E < 3.9	5	5	5	5	5	6	6	6
3.9 ≤ E < 4.1	5	5	5	5	5	6	6	6
4.1 ≤ E < 4.3	5	5	5	5	5	6	6	6
4.3 ≤ E < 4.5	5	5	5	5	5	6	5	6
4.5 ≤ E < 4.7	5	5	5	5	5	6	5	6
4.7 ≤ E < 4.9	5	5	5	5	5	6	5	6
E ≥ 4.9	5	5	5	5	5	6	5	6

Note: Assemblies with Heat Loads 1,000 W < HL ≤ 1,100 W are restricted to Zone C loading positions (Figure 2.1.1.2-1).

Table 2.1.1.2-4 Loading Table for PWR Fuel in the Advanced Basket for Assembly Heat Loads ≤ 1,100 W (Continued)

Minimum Initial Enrichment wt % ^{235}U (E)	45< Burnup ≤50 GWD/MTU Minimum Cooling Time [years]				50< Burnup ≤55 GWD/MTU Minimum Cooling Time [years]			
	14x14	15x15	16x16	17x17	14x14	15x15	16x16	17x17
1.7 ≤ E < 1.9	-	-	-	-	-	-	-	-
1.9 ≤ E < 2.1	-	-	-	-	-	-	-	-
2.1 ≤ E < 2.3	-	-	-	-	-	-	-	-
2.3 ≤ E < 2.5	-	-	-	-	-	-	-	-
2.5 ≤ E < 2.7	-	-	-	-	-	-	-	-
2.7 ≤ E < 2.9	7	8	7	8	-	-	-	-
2.9 ≤ E < 3.1	7	8	7	8	-	-	-	-
3.1 ≤ E < 3.3	6	8	7	8	8	10	8	10
3.3 ≤ E < 3.5	6	8	7	8	8	10	8	10
3.5 ≤ E < 3.7	6	8	7	8	7	10	8	9
3.7 ≤ E < 3.9	6	8	7	7	7	9	8	9
3.9 ≤ E < 4.1	6	7	7	7	7	9	8	9
4.1 ≤ E < 4.3	6	7	6	7	7	9	8	9
4.3 ≤ E < 4.5	6	7	6	7	7	9	8	9
4.5 ≤ E < 4.7	6	7	6	7	7	9	8	9
4.7 ≤ E < 4.9	6	7	6	7	7	9	7	9
E ≥ 4.9	6	7	6	7	7	9	7	9

Note: Assemblies with Heat Loads 1,000 W < HL ≤ 1,100 W are restricted to Zone C loading positions (Figure 2.1.1.2-1).

2.1.2 BWR Bounding Fuel Evaluation

2.1.2.1 Standard Configuration

The parameters of the BWR fuel assemblies that may be loaded in the Standard canister are shown in Table 2.1.2.1-1. Each canister may contain up to 56 intact BWR fuel assemblies.

The design of the Universal Storage System is based on certain reference fuel assemblies that maximize the source terms used for the shielding and criticality evaluation, and that maximize the weight used in the structural evaluation. These reference fuel assemblies are described in the chapters appropriate to the condition being evaluated. The principal characteristics and parameters of a reference fuel, such as fuel volume, initial enrichment, cool time and burnup, do not represent limiting or bounding values. Bounding values for a fuel class are established based primarily on how principal parameters are combined and on the loading conditions or restrictions established for a class of fuel based on its parameters.

The maximum canister decay heat load for the Standard configuration storage of all types of BWR fuel assemblies is 23.0 kW (0.411 kW/assembly). However, the allowable assembly decay heat load decreases with longer cool times, reflecting the corresponding reduction in allowable cladding temperature, as shown:

Cooling Time (C)	**BWR Burnup (B) [GWD/MTU]**		
Years	B ≤35	35< B ≤40	40< B ≤45
C = 5	0.411 kW	0.411 kW	0.411 kW
5< C ≤6	0.411 kW	0.411 kW	0.411 kW
6< C ≤7	0.395 kW	0.392 kW	0.390 kW
7< C ≤10	0.386 kW	0.384 kW	0.383 kW
10< C ≤15	0.377 kW	0.374 kW	0.370 kW

The cool times shown are based on a variable temperature bias to the allowable cladding temperature. The minimum cooling time for BWR fuel is shown in Table 2.1.2.1-2. Minimum cooling time is based on the maximum decay heat load (23.0 kW) and the dose rate limits for the concrete and transfer casks. Based on thermal considerations alone, all of the BWR fuel assembly types meet the decay heat load limits at cooling times less than 15 years. As shown in Table 2.1.2.1-2, certain higher burnup BWR fuel assemblies require cooling times longer than 15 years, based on dose rate limits established for the concrete or transfer cask. The minimum cooling time determination based on dose rate and heat load limits is presented in Section 5.5. BWR fuel must be loaded in accordance with Table 2.1.2.1-2.

Table 2.1.2.1-1 Standard BWR Fuel Assembly Characteristics

Fuel Class[1,5]	Vendor[4]	Array	Max. MTU	No of Fuel Rods	Max. Pitch (in)	Min. Rod Dia. (in)	Min. Clad Thick (in)	Max. Pellet Dia.(in)	Max. Active Length (in)[2]
4[5]	Ex/ANF	7 × 7	0.196	48	0.738	0.570	0.036	0.490	144.0
4	Ex/ANF	8 × 8	0.177	63	0.641	0.484	0.036	0.405	145.2
4	Ex/ANF	9 × 9	0.173	79	0.572	0.424	0.030	0.357	145.2
4	GE	7 × 7	0.199	49	0.738	0.570	0.036	0.488	144.0
4	GE	7 × 7	0.198	49	0.738	0.563	0.032	0.487	144.0
4	GE	8 × 8	0.173	60	0.640	0.484	0.032	0.410	145.2
4	GE	8 × 8	0.179	62	0.640	0.483	0.032	0.410	145.2
4	GE	8 × 8	0.186	63	0.640	0.493	0.034	0.416	144.0
5	Ex/ANF	8 × 8	0.180	62	0.641	0.484	0.036	0.405	150.0
5	Ex/ANF	9 × 9	0.167	74[3]	0.572	0.424	0.030	0.357	150.0
5[6]	Ex/ANF	9 × 9	0.178	79[3]	0.572	0.424	0.030	0.357	150.0
5	GE	7 × 7	0.198	49	0.738	0.563	0.032	0.487	144.0
5	GE	8 × 8	0.179	60	0.640	0.484	0.032	0.410	150.0
5	GE	8 × 8	0.185	62	0.640	0.483	0.032	0.410	150.0
5	GE	8 × 8	0.188	63	0.640	0.493	0.034	0.416	146.0
5	GE	9 × 9	0.186	74[3]	0.566	0.441	0.028	0.376	150.0
5	GE	9 × 9	0.198	79[3]	0.566	0.441	0.028	0.376	150.0

1. Maximum Initial Peak Planar-Average Enrichment 4.0 wt % ^{235}U. All fuel rods are Zircaloy clad.
2. 150 inch active fuel length assemblies contain 6" natural uranium blankets on top and bottom.
3. Shortened active fuel length in some rods.
4. Vendor ID indicates the source of assembly base parameters. Loading of assemblies meeting above limits is not restricted to the vendor(s) listed.
5. UMS Class 4 and 5 Class of fuel for BWR/2-3.
6. Assembly width including channel. Unchanneled or channeled assemblies may be loaded based on a maximum channel thickness of 120 mill.
7. Exxon/ANF assembly weights are listed without channel.

Table 2.1.2.1-2 Standard Loading Table for BWR Fuel

Minimum Initial Enrichment wt % ^{235}U (E)	Burnup ≤30 GWD/MTU Minimum Cooling Time [years]			30< Burnup ≤35 GWD/MTU Minimum Cooling Time [years]		
	7×7	8×8	9×9	7×7	8×8	9×9
1.9 ≤ E < 2.1	5	5	5	8	7	7
2.1 ≤ E < 2.3	5	5	5	6	6	6
2.3 ≤ E < 2.5	5	5	5	5	5	5
2.5 ≤ E < 2.7	5	5	5	5	5	5
2.7 ≤ E < 2.9	5	5	5	5	5	5
2.9 ≤ E < 3.1	5	5	5	5	5	5
3.1 ≤ E < 3.3	5	5	5	5	5	5
3.3 ≤ E < 3.5	5	5	5	5	5	5
3.5 ≤ E < 3.7	5	5	5	5	5	5
3.7 ≤ E ≤ 4.0	5	5	5	5	5	5

Minimum Initial Enrichment wt % ^{235}U (E)	35< Burnup ≤40 GWD/MTU Minimum Cooling Time [years]			40< Burnup ≤45 GWD/MTU Minimum Cooling Time [years]		
	7×7	8×8	9×9	7×7	8×8	9×9
1.9 ≤ E < 2.1	16	14	15	26	24	25
2.1 ≤ E < 2.3	13	12	12	23	21	22
2.3 ≤ E < 2.5	9	8	8	18	16	17
2.5 ≤ E < 2.7	8	7	7	15	14	14
2.7 ≤ E < 2.9	7	6	6	13	11	12
2.9 ≤ E < 3.1	6	6	6	11	10	10
3.1 ≤ E < 3.3	6	5	6	9	8	9
3.3 ≤ E < 3.5	6	5	6	8	7	8
3.5 ≤ E < 3.7	6	5	6	7	7	7
3.7 ≤ E ≤ 4.0	6	5	5	7	6	7

Note: Minimum cooling times greater than 15 years are based on the concrete cask surface dose rate limits established for the concrete cask as described in Section 5.5.4.2.

THIS PAGE INTENTIONALLY LEFT BLANK

2.1.3 Site Specific Spent Fuel

The UMS® Storage System design basis PWR fuel is described in Section 2.1.1. Four different assembly arrays: 14×14, 15×15, 16×16 and 17×17, produced by several different fuel vendors, were evaluated in the determination of the PWR design basis fuel.

The design basis BWR fuel is described in Section 2.1.2. Three different arrays: 7×7, 8×8 and 9×9, produced by several different fuel vendors were evaluated in the determination of the BWR design basis fuel.

This section describes site specific spent fuel, i.e., fuel assemblies that are configured differently or that have different fuel parameters, such as enrichment or burnup, than the design basis fuel assemblies. The site specific fuel configurations result from conditions that occurred during reactor operations, participation in research and development programs, testing programs intended to improve reactor operations or from the insertion of control components or other items within the fuel assembly.

A summary description of the site specific spent fuels is presented in Section 1.3.2. The site specific spent fuel configurations are either shown to be bounded by the design basis fuel analysis or are separately evaluated. Unless specifically excepted, site specific spent fuel must also meet the conditions specified for the design basis fuel presented in Section 1.3.1.

2.1.3.1 Maine Yankee Site Specific Spent Fuel

The Maine Yankee site specific spent fuel is stored in the Standard configuration of the UMS® Universal Storage System. The Maine Yankee fuel is categorized as intact (undamaged) or damaged as defined in Table 1-1. Generally, damaged fuel and certain undamaged fuel configurations are placed in a Maine Yankee fuel can for storage in the Standard canister; however, under certain conditions, fuel classified as damaged may be loaded as intact fuel (Section 2.1.3.1.7).

The configurations of Maine Yankee site specific spent fuel that have been evaluated and found to be acceptable contents are summarized in Section 1.3.2.1, and include those standard fuel assembly configurations, which were modified by the installation or removal of fuel or non-fuel-bearing components.

The three principal types of these modifications are:

- The removal of fuel rods without replacement.
- The replacement of removed fuel rods or burnable poison rods with rods of another material, such as stainless steel, or with fuel rods of a different enrichment.
- The insertion of control elements, non-fuel items including startup sources, or instrument or plug segments, in guide tube positions.

Site specific spent fuel also includes fuel assemblies that are uniquely designed to support reactor physics. These fuel assemblies include those that are variably enriched or that are variably enriched with annular axial blankets. Generally, these fuel assemblies (described in Sections 6.6.1.2.2 and 6.6.1.2.3) are bounded by the evaluation of the design basis fuel.

As described in Section 2.1.3.1.6, certain of the site specific spent fuel configurations, including damaged and consolidated fuel loaded in Maine Yankee fuel cans, must be preferentially loaded in corner positions of the fuel basket. In addition, certain of the site specific fuel has experienced burnup that exceeds the 45,000 MWD/MTU design basis burnup. The thermal evaluation of these fuel assemblies is presented in Section 4.5.1. The results of that evaluation show that a fuel assembly with a burnup between 45,000 and 50,000 MWD/MTU must be preferentially loaded in peripheral fuel positions in the basket.

2.1.3.1.1 Damaged Fuel Lattices

There are two lattices for damaged fuel rods in the current Maine Yankee fuel inventory, designated CF1 and CA3, that are loaded in Maine Yankee fuel cans. CF1 is a lattice having roughly the same dimensions as a standard fuel assembly. It is a 9×9 array of tubes, some of which contain damaged fuel rods. CA3 is a previously used fuel assembly lattice that has had all of the rods removed, and into which, damaged fuel rods have been inserted. The CF1 and CA3 lattices are placed in a Maine Yankee fuel can for storage. No credit is taken for the lattice structures in the criticality, structural, or thermal analysis.

2.1.3.1.2 Maine Yankee Consolidated Fuel

The Maine Yankee fuel inventory includes two consolidated fuel lattices, which house intact fuel rods taken from three fuel assemblies. Each lattice is a 17×17 array formed using stainless steel

grids and top and bottom stainless steel end fittings. Four solid stainless steel connector rods connect the end fittings. The top end fitting is designed so that the lattice can be handled by the standard fuel assembly lifting fixture (grapple). These lattices were not used in the reactor and the stainless steel hardware is not activated.

One of these lattices contains 283 fuel rods and 2 rod position vacancies. The other contains 172 fuel rods, with the 76 stainless steel dummy rods in the outer periphery of the lattice.

The consolidated fuel is placed in a Maine Yankee fuel can for storage. No credit is taken for the lattice structures in the criticality, structural, or thermal analysis.

2.1.3.1.3 Maine Yankee Spent Fuel with Inserted Integral Hardware or Non-Fuel Items

Certain Maine Yankee fuel assemblies have either a Control Element Assembly or an Instrument Segment inserted in the fuel assembly. These components add to the gamma radiation source term of the standard fuel assembly.

A Maine Yankee Control Element Assembly (CEA) consists of five control rods mounted on a Type 304 stainless steel spider assembly. The five control rods are inserted in the fuel assembly guide tubes when the CEA is inserted in the fuel assembly. When fully inserted, the control element spider rests on the fuel assembly upper end fitting. The rods are fabricated from Inconel 625 or stainless steel and encapsulate B_4C as the primary neutron poison material. Fuel assemblies with a control element installed must be loaded into a Class 2 canister because of the additional height that the control element spider adds to the fuel assembly overall length.

Some standard fuel assemblies have an in-core instrument (ICI) thimble inserted in the center guide tube of the fuel assembly. The detector material and lead wire have been removed from the ICI assembly. The thimble top end and tube are primarily Zircaloy. When installed, the instrument thimble does not add to the overall fuel assembly length. Consequently, fuel assemblies with ICI thimbles are loaded in the Class 1 canister.

The non-fuel inventory includes a segment of an ICI instrument thimble approximately 24 inches long. This segment is loaded in the corner guide tube position of an intact fuel assembly. The fuel assembly with the ICI segment installed must have a CEA flow plug installed to close the top of the corner guide tube, capturing the segment between the CEA flow plug and the bottom

end plate of the fuel assembly. The ICI segment may be installed in a fuel assembly that also holds CEA finger tips in other corner guide tube positions. Because of the CEA fuel plug, the fuel assembly must be installed in a Class 2 canister.

The non-fuel inventory also includes five startup sources. One of the startup sources is unirradiated.

The startup sources include three Pu-Be sources and two Sb-Be sources that are installed in the center guide tubes of fuel assemblies that subsequently must be loaded in one of the four corner fuel positions of the basket. Each source is designed to fit in the center guide tube of an assembly, and only one startup source may be loaded in any fuel assembly. All five of these startup sources contain Sb-Be pellets, which are 50% Be by volume. One of the three Pu-Be sources is unirradiated and evaluation of this source is based on a "fresh" source material assumption.

2.1.3.1.4 Maine Yankee Spent Fuel with Unique Design

Certain Maine Yankee fuel assemblies were uniquely designed to accommodate reactor physics. These assemblies incorporate variable radial enrichment and axial blankets.

Two batches of fuel used at Maine Yankee contain variably enriched fuel rods. The maximum fuel rod enrichment of one batch is 4.21 wt % ^{235}U with the variably enriched rods enriched to 3.5 wt % ^{235}U. The maximum planar average enrichment of this batch is 3.99 wt % ^{235}U. For the other batch, the maximum fuel rod enrichment is 4.0 wt % ^{235}U, with the variably enriched rods enriched to 3.4 wt % ^{235}U. The maximum planar average enrichment of this batch is 3.92 wt % ^{235}U.

One batch of variably enriched fuel also incorporates axial end blankets with fuel pellets that have a center hole, referred to as annular fuel pellets. Annular fuel pellets are used in the top and bottom 5% of the active fuel length of each fuel rod in this batch.

2.1.3.1.5 Maine Yankee Fuel Can

Fuel assemblies classified as damaged that exceed the limits for loading as intact fuel and certain undamaged fuel configurations are loaded in a Maine Yankee fuel can. The Maine Yankee fuel can is shown in Drawings 412-501 and 412-502 (Section 1.8). The fuel can may be loaded only in a corner position in the basket of a Class 1 canister. The fuel can analysis assumes the failure of 100 % of the fuel rods held in the fuel can.

The fuel can is sized to accommodate a fuel assembly and must be loaded in a corner position of the fuel basket. As shown in the drawings, the can is 162.8 inches in length and has an external square dimension of 8.62 inches and an internal square dimension of 8.52 inches. In the top 4.5 inches the external square dimension is 8.82 inches. The fuel can is closed on the bottom end by a 0.63-inch thick plate that is welded to the can shell. The plate has drilled holes in each corner to allow water to drain from the can. A screen covers the holes to preclude the release of gross particulates from the fuel can. A lid having an overall depth dimension of 2.38 inches closes the can. The lid is not secured to the can shell, but is held in place when the shield lid is installed in the canister. The lid also has four drilled and screened holes. The damaged fuel is inserted in the fuel can and the lid is installed. Slots in the can shell allow the loaded can to be lifted and installed in the basket. Alternately, the fuel can may be inserted in a basket corner position before the damaged fuel assembly is inserted in the fuel can. Since the fuel can lid is held in place by the canister shield lid, the fuel can may be used only in the Class 1 canister.

A Maine Yankee fuel can containing fuel debris with greater than 20 Curies of plutonium, requires double containment for transport conditions in accordance with 10 CFR 71.63 (b).

The Maine Yankee fuel can design and fabrication specification summary is provided in Table 2.1.3.1-2. The major physical design parameters of the Maine Yankee fuel can are provided in Table 2.1.3.1-3. The structural evaluation of the Maine Yankee site specific fuel configurations is provided in Section 3.6.1. As shown in Section 4.5.1, the maximum allowable heat load for the contents of a Maine Yankee fuel can is 0.958 kW.

2.1.3.1.6 Maine Yankee Site Specific Spent Fuel Preferential Loading

The estimated Maine Yankee site specific spent fuel inventory is shown in Table 2.1.3.1-1. (Note that the population of fuel in a given configuration may change based on future spent fuel inspection or survey.) As shown in this table, certain fuel configurations are preferentially loaded to take advantage of the design features of the Transportable Storage Canister and basket to allow the loading of fuel that does not specifically conform to the design basis spent fuel. The designated preferential loading positions are shown in Figure 2.1.3.1-1. The corner positions are designated by the letter "C." These positions are used primarily for the loading of fuel with missing fuel rods, fuel with fuel rods that have been replaced by rods of other material, for consolidated fuel lattices, and damaged fuel loaded in the Maine Yankee fuel can. The requirements for preferential loading schemes using the corner positions result primarily from shielding or criticality evaluations of the designated fuel configurations.

Maine Yankee consolidated fuel is loaded in a Maine Yankee fuel can and is, therefore, designated for a corner position. Preferential loading is also used for spent fuel having a burnup between 45,000 and 50,000 MWD/MTU. This fuel is assigned to peripheral locations designated by the letter "P" in Figure 2.1.3.1-1. The thermal analysis supporting the use of these locations for higher burnup fuel is presented in Section 4.5.1. As described in that section, the interior locations must be loaded with fuel that has lower burnup and/or longer cool times in order to maintain the design basis heat load and component temperature limits. Loading tables, which provide the limits for decay heat on a per assembly basis, are also provided in Section 4.5.1.

High burnup fuel (45,000 – 50,000 MWD/MTU) may be loaded as intact fuel provided that for a given fuel assembly, the cladding oxide layer on no more than 1% of the fuel rods has a peak thickness greater than 80 microns and no more than 3% of the fuel rods have a peak oxide layer thickness greater than 70 microns. The high burnup fuel is classified as failed fuel if the cladding oxide layer criteria are not met, or if the oxide layer is detached or spalled from the cladding. Since the transportable storage canister is tested to be leak tight, no additional confinement analysis is required for the high burnup fuel.

Fuel assemblies with a control element inserted will be loaded in a Class 2 canister and basket for storage and transport due to the increased length of the assembly with the control element installed. However, these assemblies are not restricted as to loading position within the basket.

Fuel assemblies with a startup source in the center guide tube position must be loaded in one of the basket corner positions. A fuel assembly may not hold more than one startup source.

The loading position of fuel assemblies holding the CEA finger tips and/or the ICI segment in a fuel assembly corner guide tube position is not controlled; however, these fuel assemblies must have a CEA flow plug to ensure these items are captured within the guide tube(s).

2.1.3.1.7 Maine Yankee High Burnup Fuel

There are ninety (90) Maine Yankee fuel assemblies that have achieved a burnup between 45,000 and 50,000 MWD/MTU. As described in Section 2.1.3.1.6, these fuel assemblies are preferentially loaded in peripheral locations in the basket. The high burnup assemblies are similar to the other Maine Yankee fuel planned to be placed in dry storage (i.e., those with burnup less than 45,000 MWD/MTU), but have design differences that support the high burnup objective.

The Combustion Engineering 14×14 high burnup fuel assemblies incorporate a lower (fuel rod) internal pressure than the UMS design basis fuel, which results in lower cladding stress throughout their reactor and storage life, and a greater cladding thickness. The greater cladding thickness, together with a larger fuel rod diameter, provide additional margin against regulatory limits. Some of the fuel assemblies have a "low tin" Zircaloy cladding, which results in lower hydrogen pick-up in the cladding and a lower cladding oxide layer thickness.

Publicly available DOE-sponsored research studies on high burnup fuel have measured irradiated Zircaloy material properties. These studies show that even at burnups over 50,000 MWD/MTU, Zircaloy cladding has adequate material strength and ductility to maintain the fuel rod integrity throughout all conditions of storage. The technical details of the DOE sponsored research studies include hot cell examinations of spent fuel from the Fort Calhoun [22] and Oconee [23] reactors.

The published reports conclude that there is an increase in the yield and ultimate strengths, and a decrease in ductility of the high burnup fuel rod Zircaloy cladding with an oxide layer thickness less than or equal to 80 microns. The Fort Calhoun and Oconee fuel rods examined had maximum burnup up to 55,700 and 54,800 MWD/MTU, respectively. Localized burnup of these fuel rods reached over 60,000 MWD/MTU. The burnups encompass the burnups of the Maine

Yankee high burnup fuel. Tables 17, 18 and 19 of the Fort Calhoun report (DOE/ET/34030-11) demonstrate that, at the respective burnups, there is a significant increase in the yield and ultimate strengths of the Zircaloy cladding with a corresponding decrease in the material ductility (plastic strain). This is further confirmed in the Oconee fuel examination report (DOE/ET/34212-50) in Table 20. These studies show that the Zircaloy material property changes occur during the early stages of irradiation and do not change significantly during the higher burnup periods. The Fort Calhoun and Maine Yankee fuels are essentially identical and are fabricated by the same supplier (Combustion Engineering). Therefore, it is concluded that the Maine Yankee high burnup fuel (45,000 < Burnup < 50,000 MWD/MTU) Zircaloy cladding ultimate and yield strengths are greater than those of standard burnup fuel assemblies, while maintaining adequate material ductility to perform its design functions.

The Maine Yankee high burnup fuel assemblies were fabricated according to their respective fuel specifications without any discrepancies or deviations that affected cladding. Review of Plant Operating Data demonstrates that the fuel has not been subjected to any unanalyzed events that could potentially lead to excessive cladding stress.

Review of fuel inspection records and video tapes of the Maine Yankee high burnup fuel assemblies shows that the fuel is essentially identical to fuel that is burned less than 45,000 MWD/MTU, with no evidence of damage or excessive cladding oxidation.

The supporting data and information demonstrates that the physical and mechanical characteristics of the Maine Yankee high burnup fuel assemblies (45,000 < Burnup < 50,000 MWD/MTU) are essentially identical to those of the fuel assemblies with burnup less than 45,000 MWD/MTU.

Figure 2.1.3.1-1 Preferential Loading Diagram for Maine Yankee Site Specific Spent Fuel

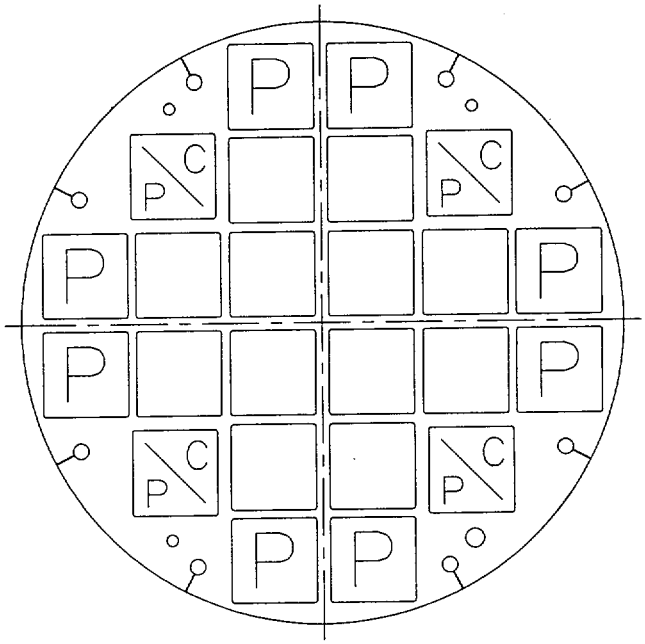

Table 2.1.3.1-1 Maine Yankee Site Specific Fuel Population

Site Specific Spent Fuel Configurations[1]	**Est. Number of Assemblies**[2]
Standard Fuel	1,434
Inserted Control Element Assembly (CEA)	168
Inserted In-Core Instrument (ICI) Thimble	138
Consolidated Fuel	2
Fuel Rod Replaced by Rod Enriched to 1.95 wt %	3
Fuel Rod Replaced by Stainless Steel Rod or Zircaloy Rod	18
Fuel Rods Removed	10
Variable Enrichment	72
Variable Enrichment and Axial Blanket	68
Burnable Poison Rod Replaced by Hollow Zircaloy Rod	80
Damaged Fuel in Maine Yankee Fuel Can	12
Burnup between 45,000 and 50,000 MWD/MTU	90
Maine Yankee Fuel Can	As Required
Inserted Startup Source	5
Inserted CEA Fingertips or ICI String Segment	1

1. The loading of the site specific fuel is controlled by the requirement of Section 12B2 of the Technical Specifications presented in Chapter 12.
2. The number of fuel assemblies in some categories may vary depending on future fuel inspections.

Table 2.1.3.1-2 Maine Yankee Fuel Can Design and Fabrication Specification Summary

Design

- The Maine Yankee Fuel Can shall be designed in accordance with ASME Code, Section III, Subsection NG except for: 1) the noted alternatives of table 12B3-1 for fuel basket structures; and 2) the Maine Yankee Fuel Can may deform under accident conditions of storage.
- The Maine Yankee Fuel Can will have screened vents in the lid and base plate. Stainless steel meshed screens (250×250) shall cover all openings.
- The Maine Yankee Fuel Can shall limit the release of material from damaged fuel assemblies and fuel debris to the canister cavity.
- The Maine Yankee Fuel Can lifting structure and lifting tool shall be designed with a minimum factor of safety of 3.0 on material yield strength.

Materials

- All material shall be in accordance with the referenced drawings and meet the applicable ASME Code sections.
- All structural materials are ASME SA 240, Type 304 stainless steel.

Welding

- All welds shall be in accordance with the referenced drawings.
- The final surface of all welds shall be liquid penetrant examined in accordance with ASME Code Section V, Article 6, with acceptance in accordance with ASME Code, Section NG-5350.

Fabrication

- All cutting, welding, and forming shall be in accordance with ASME Code Section III, NG-4000.

Acceptance Testing

- The Maine Yankee Fuel Can (first unit) and handling tool shall be load tested and visually inspected at the completion of fabrication.

Quality Assurance

- The Maine Yankee Fuel Can shall be constructed under a quality assurance program that meets 10 CFR 72 Subpart G. The quality assurance program must be accepted by NAC International and the licensee prior to initiation of the work.
- A Certificate of Conformance (or Compliance) shall be issued by the fabricator stating that the component meets the specifications and drawings.

Table 2.1.3.1-3 Major Physical Design Parameters of the Maine Yankee Fuel Can

Parameter	**Value**
Overall Length (in.)	162.8
Inside Cross Section (in.)	8.52 × 8.52
Outside Cross Section (in.) [1]	8.62 × 8.62
Can Wall Thickness	18 Gauge (0.048 in.)
Internal Cavity Length (in.)	160.0
Empty Weight (nominal) (lbs.)	130

Note [1] Outside cross section of Maine Yankee Fuel Can upper structure is 8.82 × 8.82 in. at top (4.5 in.) for lid engagement and fuel can lifting. This upper structure is located above the top weldment plate of the fuel basket assembly.

2.2 Design Criteria for Environmental Conditions and Natural Phenomena

This section presents the design criteria for site environmental conditions and natural phenomena applied in the design basis analysis of the UMS® Universal Storage System. These criteria reflect conditions and phenomena to which the Storage System could be exposed during the period of storage. The system is designed to withstand the loads imposed by these environmental conditions and natural phenomena. Analyses to demonstrate that the design basis system meets the design criteria defined in this section are presented in the appropriate chapters of this Safety Analysis Report.

The use of the UMS® Universal Storage System at a specific site requires that the site either meet the design criteria of this section or be separately evaluated against the site specific conditions to ensure the acceptable performance of the UMS® Universal Storage System. Site specific evaluations are incorporated in designated sections of each chapter of this Safety Analysis Report. Site specific evaluations for environmental conditions and natural phenomena are presented in Section 11.2.15.

2.2.1 Tornado and Wind Loadings

The Vertical Concrete Casks are typically placed outdoors on an unsheltered reinforced concrete storage pad at an ISFSI site. This storage condition exposes the casks to tornado and wind loading.

2.2.1.1 Applicable Design Parameters

The design basis tornado and wind loading is defined based on Regulatory Guide 1.76 [9] Region 1 and NUREG-0800 [10]. The tornado and wind loading criteria are:

Tornado and Wind Condition	Limit
Rotational Wind Speed, mph	290
Translational Wind Speed, mph	70
Maximum Wind Speed, mph	360
Radius of Max. Wind Speed, ft.	150
Pressure Drop, psi	3.0
Rate of Pressure Drop, psi/sec	2.0

2.2.1.2 Determination of Forces on Structures

Tornado wind forces on the Vertical Concrete Cask are calculated by multiplying the dynamic wind pressure by the frontal area of the cask normal to the wind direction. Wind forces are applied to the cask in the wind direction. No streamlining is assumed. The evaluation of wind loading and tornado missile effects on the cask is presented in Section 11.2.11. The total design basis wind loading on the projected area of the cask is determined in Section 11.2.11. The cask is demonstrated to remain stable under design basis tornado wind loading in conjunction with impact from a high energy tornado missile.

2.2.1.3 Tornado Missiles

The design basis tornado missile impacts are defined in Paragraph 4, Subsection III, Section 3.5.1.4 of NUREG-0800 [10]. The design basis tornado is considered to generate three types of missiles that impact the cask at normal incidence:

1. Massive Missile - (Deformable w/high kinetic energy)	Weight = 4,000 lbs Frontal Area = 20 sq.-ft
2. Penetration Missile - (Rigid hardened steel)	Weight = 280 lbs Diameter = 8.0 in
3. Protective Barrier Missile - (Solid steel sphere)	Weight = 0.15 lbs Diameter = 1.0 in

Each missile is assumed to impact the cask at a velocity of 126 miles per hour, horizontal to the ground, which is 35 percent of the maximum wind speed of 360 miles per hour. For missile impacts in the vertical direction, the assumed missile velocity is (0.7)(126) = 88.2 miles per hour.

The detailed analysis of the Vertical Concrete Cask for missile impacts applies the laws of conservation of momentum and conservation of energy to determine the rigid body response of the concrete cask. Each missile impact is evaluated, and all missiles are assumed to impact in a manner that produces the maximum damage to the cask. The tornado and wind driven missile impact evaluation is presented in Section 11.2.11.

2.2.2 Water Level (Flood) Design

The Vertical Concrete Cask may be exposed to a flood during storage on an unsheltered concrete storage pad at an ISFSI site. The source and magnitude of the probable maximum flood depend on specific site characteristics.

2.2.2.1 Flood Elevations

The Vertical Concrete Cask is evaluated in Section 11.2.9 for a maximum flood water depth of 50 feet above the base of the cask. The flood water velocity is assumed to be 15 feet per second. Results of the evaluation show that under design basis flood conditions, the cask does not float, tip, or slide on the storage pad, and that the confinement function is maintained.

2.2.2.2 Phenomena Considered in Design Load Calculations

The occurrence of flooding at an ISFSI site is dependent upon the specific site location and the surrounding geographical features, natural and man-made. Some possible sources of a flood at an ISFSI site are: (1) overflow from a river or stream due to unusually heavy rain, snow-melt runoff, a dam or major water supply line break caused by a seismic event (earthquake); (2) high tides produced by a hurricane; and (3) a tsunami (tidal wave) caused by an underwater earthquake or volcanic eruption.

Flooding at an ISFSI site is highly improbable because of the extensive environmental impact studies that are performed during the selection of a site for a nuclear facility.

2.2.2.3 Flood Force Application

The evaluation of the Universal Storage System for a flood condition determines a maximum allowable flood water current velocity and a maximum allowable flood water depth. The criteria employed in the determination of the maximum allowable values are that a cask sliding or tip-over will not occur, and that the canister material yield strength is not exceeded. The evaluation of the effects of flood conditions on the system is presented in Section 11.2.9.

The force of the flood water current on the cask is calculated as a function of the current velocity by multiplying the dynamic water pressure by the frontal area of the cask that is normal to the current direction. The dynamic water pressure is calculated using Bernoulli's equation relating fluid velocity and pressure. The force of the flood water current is limited such that the overturning moment on the cask will be less than that required to tip the cask over.

2.2.2.4 Flood Protection

The inherent strength of the reinforced concrete cask provides a substantial margin of safety against any permanent deformation of the cask for a credible flood event at an ISFSI site. Therefore, no special flood protection measures for the cask are necessary. The evaluation presented in Section 11.2.9 shows that for the design basis flood, the allowable stresses in the canister are not exceeded.

2.2.3 Seismic Design

An ISFSI site may be subject to seismic events (earthquakes) during its lifetime. The seismic response spectra experienced by the cask depends upon the geographical location of the specific site and the distance from the epicenter of the earthquake. The only significant effect of a seismic event on the Vertical Concrete Cask is a possible tip-over; however, tip-over does not occur during the design basis earthquake. Seismic response of the cask is presented in Section 11.2.8.

2.2.3.1 Input Criteria

The Transportable Storage Canister and Vertical Concrete Cask are designed and analyzed for sites east of the Rocky Mountain front by applying a 0.26g seismic acceleration at the top surface of the ISFSI pad.

2.2.3.2 Seismic - System Analyses

The analysis for the earthquake condition applied to nuclear facilities east of the Rocky Mountain front is provided in Section 11.2.8.2. The evaluation shows that the concrete cask

does not tip over or slide in the design basis earthquake. Evaluation of the consequences of a hypothetical tip-over event is provided in Section 11.2.12.

2.2.4 Snow and Ice Loadings

The criterion for determining design snow loads is based on ANSI/ASCE 7-93 [12], Section 7.0. Flat roof snow loads apply and are calculated from the following formula:

$$p_f = 0.7C_eC_tIp_g$$

where:

p_f = flat roof snow load (psf)
C_e = Exposure factor = 1.0
C_t = Thermal factor = 1.2
I = Importance factor = 1.2
p_g = ground snow load, (psf) = 100

The numerical values of C_e, C_t, I and p_g are obtained from Tables 18, 19, 20 and Figure 7, respectively, of ANSI/ASCE 7-93.

The exposure factor, C_e, accounts for wind effects. The site of the Universal Storage System is assumed to be a location typical for siting Category C, which is defined to be "locations in which snow removal by wind cannot be relied on to reduce roof loads because of terrain, higher structures, or several trees nearby."

The thermal factor, C_t, accounts for the importance of buildings and structures in relation to public health and safety. The Universal Storage System is conservatively classified as Category III.

Ground snow loads for the contiguous United States are given in Figures 5, 6 and 7 of ANSI/ ASCE 7-93. A worst case value of 100 lbs per square ft is assumed.

Based on the above, the design criterion for snow and ice loads is:

Flat Roof Snow Load, $p_f = (0.7)\ (1.0)\ (1.2)\ (1.2)\ (100\ ) \quad = 100.8$ psf

This load is bounded by the weight of the loaded transfer cask on the top of the concrete cask shell and by the tornado missile loading on the concrete cask lid. The snow load is considered in the load combinations described in Section 3.4.4.2.2.

2.2.5 Combined Load Criteria

Each normal, off-normal and accident condition has a combination of load cases that defines the total combined loading for that condition. The individual load cases considered include thermal, seismic, external and internal pressure, missile impacts, drops, snow and ice loads, and/or flood water forces.

The load conditions to be evaluated for storage casks are identified in 10 CFR 72[11] and ANSI/ANS-57.9 [13].

2.2.5.1 Load Combinations and Design Strength - Vertical Concrete Cask

The load combinations specified in ANSI/ANS 57.9 for concrete structures are applied to the concrete casks as shown in Table 2.2-1. The live loads are considered to vary from 0 percent to 100 percent to ensure that the worst-case condition is evaluated. In each case, use of 100 percent of the live load produces the maximum load condition. The steel liner of the concrete cask is a stay-in-place form and it provides radiation shielding. The concrete cask is designed to the requirements of ACI 349 [4].

In calculating the design strength of concrete in the Vertical Concrete Cask body, nominal strength values are multiplied by a strength reduction factor in accordance with Section 9.3 of ACI 349.

2.2.5.2 Load Combinations and Design Strength - Canister and Basket

The canister is designed in accordance with the 1995 edition of the ASME Code, Section III, Subsection NB [1] for Class 1 components. The basket structure is designed in accordance with

ASME Code, Section III, Subsection NG [2]. Structural buckling of the basket is evaluated in accordance with NUREG/CR-6322 [3].

The load combinations for all normal, off-normal, and accident conditions and corresponding service levels are shown in Table 2.2-2. The table, therefore, defines the canister design and service loadings. Levels A and D service limits are used for normal and accident conditions, respectively. Levels B and C service limits are used for off-normal conditions. The analysis methods of the ASME Code are employed. Stress intensities caused by pressure, temperature, and mechanical loads are combined before comparing them to ASME code allowables. The Code allowables are listed in Table 2.2-3.

2.2.5.3 Design Strength - Transfer Cask

The transfer cask is a special lifting device. It is designed and fabricated to the requirements of ANSI N14.6 [6] and NUREG 0612 [7] for the lifting trunnions and supports, and ANSI/ANS-57.9 [13] for the remainder of the structure. The criteria are:

1. The combined shear stress or maximum tensile stress during the lift (with 10 percent dynamic load factor) shall be $\leq S_y/6$ and $S_u/10$ for a nonredundant load path, or shall be $\leq S_y/3$ and $S_u/5$ for redundant load paths.

2. The ferritic steel material used for the load bearing members of the transfer cask shall satisfy the material toughness requirements of ANSI N14.6, paragraph 4.2.6.

Load testing of the transfer cask is described in Section 2.3.3.1.

2.2.6 Environmental Temperatures

A normal, long-term annual average design ambient temperature of 76°F is selected to bound most annual average temperatures seen by a cask over its lifetime. This temperature is based on the maximum average annual temperature in the 48 contiguous United States, specifically, Miami, FL., at 75.6°F [14], and is, therefore, used so as to bound existing and potential ISFSI sites.

The 76°F normal temperature is used as the base for thermal evaluations. The evaluation of this environmental condition is discussed along with the thermal analysis models in Chapter 4.0. The thermal stress evaluation for the normal operating conditions is provided in Section 3.4.4. Normal temperature fluctuations are bounded by the severe ambient temperature cases that are evaluated as off-normal and accident conditions.

Off-normal, severe environmental conditions are defined as -40°F with no solar loads and 106°F with solar loads. An extreme environmental condition of 133°F with maximum solar loads is evaluated as an accident case (11.2.7) to show compliance with the maximum heat load case required by ANSI/ANS-57.9. Thermal performance is also evaluated assuming half-blockage of the concrete cask air inlets and the complete blockage of the air inlets and outlets. Thermal analyses for these cases are presented in Sections 11.1.2 and 11.2.13. The evaluation based on ambient temperature conditions is presented in Section 4.4.

The design basis temperatures used in the Universal Storage System analysis are shown below. Solar insolance is as specified in 10 CFR 71.71 [15] and Regulatory Guide 7.8 [16].

Condition	Ambient Temperature	Solar Insolance
Normal	76°F	yes
Off-Normal - Severe Heat	106°F	yes
Off-Normal - Severe Cold	-40°F	no
Accident - Extreme Heat	133°F	yes

Table 2.2-1 Load Combinations for the Vertical Concrete Cask

Load Combination	Condition	Dead	Live	Wind	Thermal	Seismic	Tornado/ Missile	Drop/ Impact	Flood
1	Normal	1.4D	1.7L						
2	Normal	1.05D	1.275L		$1.275T_o$				
3	Normal	1.05D	1.275L	1.275W	$1.275T_o$				
4	Off-Normal and Accident	D	L		T_a				
5	Accident	D	L		T_o	E_{ss}			
6	Accident	D	L		T_o			A	
7	Accident	D	L		T_o				F
8	Accident	D	L		T_o		W_t		

Load Combinations are from ANSI/ANS-57.9 [13] and ACI 349 [4].

D	=	Dead Load	T_a	=	Off- Normal or Accident Temperature
L	=	Live Load	E_{ss}	=	Design Basis Earthquake
W	=	Wind	W_t	=	Tornado/Tornado Missile
T_o	=	Normal Temperature	A	=	Drop/Impact
F	=	Flood			

Table 2.2-2 Load Combinations for the Transportable Storage Canister

LOAD		**NORMAL**			**OFF-NORMAL**					**ACCIDENT**					
ASME Service Level		A			B		C			D					
Load Combinations		1	2	3	1	2	3	4	5	1	2	3	4	5	6
Dead Weight	Canister with fuel	X	X	X	X	X	X	X	X	X	X	X	X	X	X
Thermal	In Storage Cask 76° F Ambient	X		X				X		X	X	X	X	X	
	In Transfer Cask 76° F Ambient		X		X		X								X
	In Storage Cask -40°F or 106°F Ambient					X			X						
Internal Pressure	Normal	X	X	X			X	X	X	X	X	X	X		
	Off-Normal				X	X									
	Accident													X	X
Handling Load	Normal		X	X	X										
	Off-Normal						X	X	X						
Drop/Impact	Accident									X					
Seismic	Accident										X				
Flood	Accident											X			
Tornado	Accident												X		

Table 2.2-3 Structural Design Criteria for Components Used in the Transportable Storage Canister

	Component	Criteria
1.	Normal Operations: Service Level A Canister: ASME Section III, Subsection NB [1] Basket: ASME Section III, Subsection NG [2] Lifting Devices: ANSI N14.6 [6] and NUREG 0612 [7]	$P_m \leq S_m$ $P_L + P_b \leq 1.5\ S_m$ $P_L + P_b + Q \leq 3S_m$ Redundant load path: combined shear or max. tensile stress $\leq S_u/5$ and $S_y/3$
2.	Off-Normal Operations: Service Level B Canister: ASME Section III, Subsection NB	$P_m < 1.1\ S_m$ and $P_L + P_b < 1.65\ S_m$
3.	Off-Normal Operations: Service Level C Canister: ASME Section III, Subsection NB Basket: ASME Section III, Subsection NG Note: Subsection NB allowables for Service Level C are conservatively applied to the basket.	Subsection NB Allowables: $P_m < 1.2\ S_m$ or S_y (whichever is greater) and $P_L + P_b < 1.8\ S_m$ or $1.5\ S_y$ (whichever is less)
4.	Accident Conditions, Service Level D Canister: ASME Section III, Subsection NB Basket: ASME Section III, Subsection NG	$P_m \leq 2.4\ S_m$ or $0.7\ S_u$ (whichever is less) and $P_L + P_b \leq 3.6\ S_m$ or $1.05\ S_u$ (whichever is less)
5.	Basket Structural Buckling	NUREG/CR-6322 [3]

Symbols:

S_m = material design stress intensity
S_u = material ultimate strength
S_y = material yield strength
P_L = primary local membrane stress
P_m = primary general membrane stress
P_b = primary bending stress

THIS PAGE INTENTIONALLY LEFT BLANK

2.3 Safety Protection Systems

The Universal Storage System relies upon passive systems to ensure the protection of public health and safety, except in the case of fire or explosion. As discussed in Section 2.3.6, fire and explosion events are effectively precluded by site administrative controls that prevent the introduction of flammable and explosive materials. The use of passive systems provides protection from mechanical or equipment failure.

2.3.1 General

The Universal Storage System is designed for safe, long-term storage of spent nuclear fuel. The system will withstand all of the evaluated normal, off-normal, and postulated accident conditions without release of radioactive material or excessive radiation exposure to workers or the general public. The major design considerations that are incorporated in the Universal Storage System to assure safe, long-term fuel storage are:

1. Continued containment in postulated accidents.
2. Thick concrete and steel biological shield.
3. Passive systems that ensure reliability.
4. Inert helium atmosphere to provide corrosion protection for fuel cladding and enhanced heat transfer for the stored fuel.

Each component of the Universal Storage System is classified with respect to its function and corresponding effect on public safety. In accordance with Regulatory Guide 7.10 [17], each system component is assigned a safety classification and then "important to safety" items are further categorized based on importance to safety into Category A, B, or C, as shown in Table 2.3-1. The safety classification is based on review of each component's function and the assessment of the consequences of its failure following the guidelines of NUREG/CR-6407 [18]. The safety classification categories are defined as follows:

- Category A - Components critical to safe operations whose failure or malfunction could directly result in conditions adverse to safe operations, integrity of spent fuel, or public health and safety.

- Category B - Components with major impact on safe operations whose failure or malfunction could indirectly result in conditions adverse to safe operations, integrity of spent fuel, or public health and safety.

- Category C - Components whose failure would not significantly reduce the packaging effectiveness and would not likely result in conditions adverse to safe operations, integrity of spent fuel, or public health and safety.

As discussed in the following sections, the Universal Storage System design incorporates features addressing the above design considerations to assure safe operation during loading, handling, and storage of spent nuclear fuel.

2.3.2 Protection by Multiple Confinement Barriers and Systems

2.3.2.1 Confinement Barriers and Systems

The radioactivity that the Universal Storage System must confine originates from the spent fuel assemblies to be stored and residual contamination that may remain inside the canister as a result of contact with water in the fuel pool where the canister loading is conducted. The system is designed to confine this radioactive material.

The Transportable Storage Canister is closed by welding. The shield lid weld is pressure tested. All of the field-installed shield lid welds are liquid penetrant examined following the root and final weld passes. The shield lid welds are leak tested. The installation of the canister structural lid, which provides a redundant closure over the shield lid and port covers, is accomplished by multi-pass welding that is either: 1) progressively liquid penetrant examined; or 2) ultrasonically examined in conjunction with a liquid penetrant examination of the final weld surface. The longitudinal and girth welds of the canister shell are full penetration welds that are radiographically examined during fabrication. The weld that joins the bottom plate to the canister shell is ultrasonically and liquid penetrant examined during fabrication.

The canister welds are an impenetrable boundary to the release of fission gas products during the period of storage. There are no evaluated normal, off-normal, or accident conditions that result in the breach of the canister and the subsequent release of fission products. The canister is

designed to withstand a postulated drop accident in the UMS Universal Transport Cask without precluding the subsequent removal of the fuel (i.e., the fuel tubes (Standard basket) and fuel loading positions (Advanced basket) do not deform such that they bind the fuel assemblies).

Personnel radiation exposure during handling and closure of the canister is minimized by the following steps:

1. Placing the shield lid on the canister while the transfer cask and canister are under water in the fuel pool.
2. Decontaminating the exterior of the transfer cask prior to draining the canister to preserve the shielding benefit of the water.
3. Using temporary shielding.
4. Using a retaining ring on the transfer cask to ensure that the canister is not raised out of the shield provided by the transfer cask.
5. Placing a shielding ring over the annular gap between the transfer cask and the canister.

2.3.2.2 Cask Cooling

The loaded Vertical Concrete Cask is passively cooled. Cool (ambient) air enters at the bottom of the concrete cask through four inlet vents. Heated air exits through the four outlets at the top of the cask. Radiant heat transfer also occurs from the canister shell to the concrete cask liner. Consequently, the liner also heats the convective air flow. Conduction does not play a substantial role in heat removal from the canister surface. This natural circulation of air inside the Vertical Concrete Cask, in conjunction with radiation from the canister surface, maintains the fuel cladding temperature and all of the concrete cask component temperatures below their design limits. The cask cooling system is described in detail in Sections 4.1 and 4.4.

2.3.3 Protection by Equipment and Instrumentation Selection

The Universal Storage System is a passive storage system that does not rely on equipment or instruments to preserve public health or safety and to meet its safety functions in long-term storage. The system employs support equipment and instrumentation to facilitate operations. These items, and the actions taken to assure performance, are described below.

2.3.3.1 Equipment

The canister handling system consists of the transfer cask and the lifting yoke used to lift the transfer cask. The transfer cask is provided in the Standard, Advanced or 100-ton configuration. The Standard and Advanced transfer casks have the same design except that the Advanced transfer cask design incorporates a trunnion support plate, allowing it to handle canisters weighing up to 103,000 lbs. The Standard transfer cask, without the support plate, is limited to canisters weighing up to 88,000 lbs. The 100-ton transfer cask is designed to be used to meet a 100-ton cask handling crane load limit, and may be operated in the vertical or horizontal orientation. Each transfer cask configuration has a unique lifting yoke designed to meet the requirements of ANSI N14.6 and NUREG-0612 and are designed as special lifting devices for critical loads. Lifting yokes are proof load tested to 300% of design load when fabricated. The lifting yokes have no welds in the lifting load path. Following the load test, the bolted connections are disassembled, and the components are inspected for deformation. Permanent deformation of components is not acceptable. The lifting yoke is inspected for visible defects prior to each use and is inspected annually.

The transfer cask is used to move the empty and loaded Transportable Storage Canister in all of the operations that precede the installation of the loaded canister in the Vertical Concrete Cask. The transfer cask is evaluated as a lifting component. The principal design criteria of the transfer cask are presented in Section 2.2.5.3. The Standard/Advanced transfer cask has 2 pairs of lifting trunnions. Each pair is designed as a special lifting device for critical loads, but both pairs may be used together in order to provide a redundant load path. The 100-ton transfer cask has a single pair of trunnions. Each pair of transfer cask trunnions is load tested to 300% of the maximum calculated service load. The service load includes the transfer cask weight, the loaded canister, and water in the canister. Following the load test, the trunnion welds and other welds in the load path are inspected for indications of cracking or deformation. The principal load bearing welds and the transfer cask lifting trunnions are evaluated in Section 3.4.3.3.

The transfer cask bottom shield doors support the canister from the bottom during handling of the canister. The shield doors are also load tested to 300% of the maximum calculated service load. The service load includes the weight of the loaded canister and water in the canister. Following the load test, the load bearing surface areas of the doors, rails, and attachment welds are examined for evidence of cracking or deformation.

The transfer cask welds are subjected to a liquid penetrant examination, performed in accordance with the ASME Code, Section V, Article 6. Acceptance criteria is in accordance with the ASME Code, Paragraph NF-5350.

Any evidence of permanent deformation, cracking, galling of bearing surfaces, or unacceptable liquid penetrant examination results is cause for rejection. Any identified defects must be repaired and the load test repeated prior to final acceptance.

2.3.3.2 Instrumentation

A remote temperature measuring system is employed to measure the outlet air temperature of the Vertical Concrete Casks in long-term storage. The outlet temperature is recorded daily as a check of the thermal performance of the heat rejection capability of the storage cask. The outlet temperature is expected to increase in the unlikely event that one or more inlets or outlets become blocked. Consequently, visual inspection of the inlets and outlets is required when the temperature differential between the ambient air temperature and the outlet air temperature exceeds 102°F for the Standard PWR configuration, 92°F for the Standard BWR configuration or 112°F for the Advanced PWR configuration, during normal operations. In addition, visual inspection of the inlets and outlets is required following any natural phenomena event, such as an earthquake, that could lead to a reduction in efficiency of the cooling system.

The canister shield lid weld is helium leak tested during closure. The leak detector is checked against a known helium source immediately prior to, and after, use to preclude unknown leak detector failure.

2.3.4 Nuclear Criticality Safety

The Universal Storage System design includes features to ensure that nuclear criticality safety is maintained (i. e., the cask remains subcritical) under normal, off-normal, and accident conditions. The design of the canister and fuel basket is such that, under all conditions, the highest neutron multiplication factor (k_{eff}) is less than 0.95. The criticality evaluation for the design basis fuel is presented in Section 6.4.

2.3.4.1 Control Methods for Prevention of Criticality

Criticality control in the PWR basket is achieved using a neutron flux trap configuration. Individual fuel assemblies in the Standard basket are surrounded by four neutron absorber sheets,

one on each side of the assembly, that provide absorption of moderated neutrons. In the Advanced basket, periphery fuel loading positions may have neutron absorber on only 1, 2 or 3 sides. The assemblies are separated by a gap that is filled with water during hypothetical accident conditions when the canister is flooded. Fast neutrons escaping one fuel assembly are moderated in the gap between the assemblies and absorbed by the neutron absorber material surrounding the assemblies. The minimum loading of the neutron absorber sheets in the Standard basket is 0.025 g $^{10}B/cm^2$ and is 0.19 g $^{10}B/cm^2$ in the Advanced basket. The neutron absorber sheets in the Standard basket are mechanically supported by the fuel tube structure. In the Advanced basket, the sheets are mechanically supported using a tab and slot design. The two configurations ensure that the neutron absorber sheets remain in place during the design basis normal, off-normal, and accident events.

Individual fuel assemblies in the Standard BWR basket are separated from adjacent assemblies by a single neutron absorber sheet between fuel assemblies. Of the total 56 fuel tubes, 42 tubes contain neutron absorber sheets on two sides of the tubes, 11 tubes contain neutron absorber sheets on one side, and the remaining 3 tubes contain no neutron absorber sheets. The arrangement of the fuel tubes ensures that there is at least one neutron absorber sheet between adjacent fuel assemblies. Although this configuration of water gaps and neutron absorber sheets does not form a classic neutron flux trap, the design assures that there is sufficient absorption of moderated neutrons by the neutron absorber to maintain criticality control in the basket (k_{eff} < 0.95). The minimum loading of the neutron absorber sheets in the BWR fuel tubes is 0.011 g $^{10}B/cm^2$. The neutron absorber sheets are mechanically supported by the fuel tube structure to ensure that the neutron absorber sheets remain in place during the design basis normal, off-normal, and accident events.

The efficiency of the neutron absorber sheets in preserving nuclear criticality safety is demonstrated by the criticality results presented in Section 6.4.3.

The principal criticality design criterion is that k_{eff} remain below 0.95 under all conditions. Assumptions made in the analyses used to demonstrate conformance to this criterion include:

1. Fuel assembly with maximum ^{235}U loading (95% theoretical density);
2. 75 percent of the nominal ^{10}B loading in the neutron absorber in the Standard basket;
3. 90 percent of the nominal ^{10}B loading in the neutron absorber in the Advanced basket;
4. Infinite array of casks in the X-Y (horizontal) plane;
5. Infinite fuel length with no inclusion of end leakage effects;

6. No credit is taken for soluble boron in spent fuel pool water;
7. No credit taken for structural material present in the assembly; and,
8. No credit taken for fuel burnup or for the buildup of fission product neutron poisons.

Use of administrative controls of fuel burnup levels, neutron absorption properties of the burned fuel, and the presence of steel shell of the canister provide further criticality controls in the Universal Storage System.

2.3.4.2 Error Contingency Criteria

The calculated values of k_{eff} include error contingencies and calculation and modeling biases. The standards and regulations of criticality safety require that k_{eff}, including uncertainties, k_s, be less than 0.95. The bias and 95/95 uncertainty are applied to the calculation of k_s by using:

$$k_s = k_{nom} + 0.0052 + [(0.0087)^2 + (2\sigma_{MC})^2]^{1/2} \leq 0.95$$

where:

k_{nom} = the nominal k_{eff} for the cask, and
σ_{MC} = the Monte Carlo uncertainty.

The calculation of error contingencies and uncertainties is presented in Section 6.4.

2.3.4.3 Verification Analyses

The CSAS25 criticality analysis sequence is benchmarked through a series of calculations based on 63 critical experiments. These experiments span a range of fuel enrichments, fuel rod pitches, poison sheet characteristics, shielding materials, and geometries that are typical of light water reactor fuel in a cask. To achieve accurate results, three-dimensional models, as close to the actual experiment as possible, are used to evaluate the experiments. The results of the benchmark calculations are provided in Section 6.5.

2.3.5 Radiological Protection

The Universal Storage System, in keeping with the As Low As Is Reasonably Achievable (ALARA) philosophy, is designed to minimize, to the extent practicable, operator radiological exposure.

2.3.5.1 Access Control

Access to a Universal Storage System ISFSI site is controlled by a peripheral fence to meet the requirements of 10 CFR 72 and 10 CFR 20 [19]. Access to the storage area, and its designation as to the level of radiation protection required, are established by site procedure. The storage area is surrounded by a fence, having lockable truck and personnel access gates. The fence has intrusion-detection features as determined by the site procedure.

2.3.5.2 Shielding

The Universal Storage System is designed to limit the dose rates as follows:

- external surface dose (gamma and neutron) to less than 50 mrem/hr (average) on the Vertical Concrete Cask sides.
- external surface dose to less than 100 mrem/hr (average) on the Vertical Concrete Cask top.
- a maximum of 300 mrem/hr at the Vertical Concrete Cask air inlets and outlets.
- less than 300 mrem/hr (average) on the Standard transfer cask side wall.
- less than 450 mrem/hr (average) on the Advanced transfer cask side wall.
- less than 1,300 mrem/hr (average) on the 100-ton transfer cask side wall.
- the design maximum dose rate at the top of the canister structural lid, with supplemental shielding to less than 300 mrem/hr to limit personnel exposure during canister closure operations.

Sections 72.104 and 72.106 of 10 CFR 72 set whole body dose limits for an individual located beyond the controlled area at 25 millirems per year (whole body) during normal operations and 5 rems (5,000 millirems) from any design basis accident. The analyses showing the actual Universal Storage System doses, and dose rates, are included in Chapters 5.0, 10.0 and 11.0.

2.3.5.3 Ventilation Off-Gas

The Universal Storage System is passively cooled by radiation and natural convection heat transfer at the outer surface of the concrete cask and in the canister-concrete cask annulus. The

bottom of the cask is conservatively assumed to be an adiabatic surface. In the canister-concrete cask annulus, air enters the air inlets, flows up between the canister and concrete cask liner in the annulus, and exits the air outlets. The air flow in the annulus is due to the buoyancy effect created by the heating of the air by the canister and concrete cask liner walls. The details of the passive ventilation system design are provided in Chapter 4.0.

The surface of the canister is exposed to cooling air when the canister is placed in the concrete cask. If the surface is contaminated, the possibility exists that contamination could be carried aloft by the cooling air stream. Therefore, during fuel loading, the spent fuel pool water is excluded from the canister exterior by filling the transfer cask/canister annular gap with clean water as the transfer cask is being lowered into the fuel pool. Clean water is injected into the gap during the entire time the transfer cask is submerged. These steps minimize the potential for the intrusion of contaminated water into the canister annular gap.

Once the transfer cask is removed from the pool, a smear survey is taken of the exterior surface of the canister near the top. While no contamination is expected to be found, it is possible that the surface could be contaminated. The allowable upper limit for surface contamination of the canister and transfer cask is provided in LCO 3.2.1 in Appendix 12A of Chapter 12. As described in LCO 3.2.1, if this limit is exceeded, steps to decontaminate the canister surface must be taken and continued until the contamination is less than the allowable limit.

To facilitate decontamination, the canister is fabricated so that its exterior surface is smooth. There are no corners or pockets that could trap and hold contamination.

There are no radioactive releases during normal operations. Also, there are no credible accidents that cause significant releases of radioactivity from the Universal Storage System and, hence, there are no off-gas system requirements for the system during normal storage operation. The only time an off-gas system is required is during the canister drying phase. During this operation, the reactor off-gas system or a HEPA filter system is used.

2.3.5.4 Radiological Alarm Systems

No radiological alarms are required on the Universal Storage System. Justification for this is provided in Chapter 5.0 (Shielding), 10.0 (Radiological Protection), and 11.0 (Accident Analysis).

Typically, total radiation exposure due to the ISFSI installation is determined by the use of Thermo-Luminescent Detectors (TLDs) mounted at convenient locations on the ISFSI fence. The TLDs are read quarterly to provide a record of boundary dose.

2.3.6 Fire and Explosion Protection

Fire and explosion protection of the Universal Storage System is provided primarily by administrative controls applied at the site, which preclude the introduction of any explosive and any excessive flammable materials into the ISFSI area.

2.3.6.1 Fire Protection

A major ISFSI fire is not considered credible, since there is very little material near the casks that could contribute to a fire. The concrete cask is largely impervious to incidental thermal events. Administrative controls are put in place to ensure that the presence of combustibles is minimized. A hypothetical fire event is evaluated as an accident condition in Section 11.2.6. The fire event evaluated is a 1475°F fire of 8 minutes duration. This condition is considered to be highly conservative.

2.3.6.2 Explosion Protection

The Universal Storage System is analyzed to ensure its proper function under an over-pressure condition. As described in Section 11.2.5, in the evaluated 22 psig over-pressure condition, stresses in the canister remain below allowable limits and there is no loss of confinement. These results are conservative, as the canister is protected from direct over-pressure conditions by the concrete cask.

For the same reasons as for the fire condition, a severe explosion on an ISFSI site is not considered credible. The evaluated over-pressure is considered to bound any explosive over-pressure resulting from an industrial explosion at the boundary of the owner-controlled area.

2.3.7 Ancillary Structures

The loading, transfer and transport of the UMS® System requires the use of auxiliary equipment as described in Section 2.3.3 and may require the use of an ancillary structure, referred to as a

"Canister Handling Facility." The Canister Handling Facility is an especially designed and engineered structure separate from the 10 CFR 50 facilities at the site. The Canister Handling Facility, if required, would provide a housing for a lifting crane, service air and water, a radiation control area, auxiliary equipment storage and support services and work areas related to canister handling and transfer. Transfer operations could include temporary holding of a loaded canister in the transfer cask to allow repair of a concrete cask, transfer of a canister from one concrete cask to another, or transfer from a concrete cask to a transport cask.

The design of the Canister Handling Facility would meet the requirements of the Universal Storage System described in Approved Contents and Design Features presented in Appendix 12B of Chapter 12, in addition to those requirements established by the site.

The design, analysis, fabrication, operation and maintenance of the Canister Handling Facility would be performed in accordance with the quality assurance program requirements of the site general licensee, or the site-specific licensee of the ISFSI. The Canister Handling Facility would be classified as Important to Safety or Not Important to Safety in accordance with the guidelines of NUREG-6407.

Table 2.3-1 Safety Classification of Universal Storage System Components

Drawing No.	Description	Item No.	Component	Function	Safety Class
790-559	Assembly, Transfer Adapter	17	Cylinder Bolt	Operations	C
		15	Connector Body Bolt	Operations	C
		14	Wear Pad Bolt	Operations	NQ
		13	Wear Pad	Operations	NQ
		12	Connector Body	Operations	C
		10	Cylinder Nut	Operations	C
		8	Door Cylinder	Operations	C
		7	Lift Lug	Operations	C
		6	Support	Operations	C
		5	Side Shield	Operations	C
		3, 4	Door Rail	Operations	C
		2	Locating Ring	Operations	C
		1	Base Plate	Operations	C
790-560	Assembly, Transfer Cask	46	Dowel Pin	Operations	NQ
	(Standard/Advanced)	45	Fill/Drain Line Pipe	Operations	C
		44	Fill/Drain Line Plate	Operations	C
		43	Shielding Ring	Shielding	B
		42	Transfer Adapter SHCS	Shielding	B
		41	Transfer Cask Extension	Shielding	B
		39	Connector	Operations	C
		38	Retaining Ring Bolt	Operations	B
		37	Scuff Plate	Operations	NQ
		36	Gamma Shield Brick	Shielding	B
		33-34	Neutron Shield Cover Plate	Operations	C
		28-32	Neutron Shield Boundary	Structural	C
		26-27	Bottom Plate	Structural	B
		25	Stainless Steel Sheet	Operations	NQ
		24	Paint	Operations	NQ

Table 2.3-1 Safety Classification of Universal Storage System Components (continued)

Drawing No.	Description	Item No.	Component	Function	Safety Class
790-560 (Continued)	Assembly, Transfer Cask	23	Lead Wool	Operations/Shielding	NQ
	(Standard/Advanced)	22	Coating	Operations	C
		21	Support Plate	Operations	B
		20	Retaining Ring	Operations	B
		19	Door Lock Bolt	Operations	C
		16	Door Rail	Operations	B
		15	Top Plate	Structural	B
		14	Neutron Shield	Shielding	B
		13	Trunnion Cap	Operations	C
		12	Trunnion	Structural	B
		7-11	Outer Shell	Structural	B
		2-6	Inner Shell	Structural	B
		1	Bottom Plate	Structural	B
790-561	Weldment, Structure, Vertical Concrete Cask	31	Lifting Nut	Operations	NQ
	(Standard)	27-30	Shell	Shielding/Structural	B
		26	Screen Table	Structural	C
		25	Baffle	Heat Transfer	B
		18-24	Outlet (4)	Heat Transfer	B
		20	Shield Plate	Shielding	B
		17	Nelson Stud	Structural	B
		16	Base Plate	Structural	B
		15	Stand	Structural	B
		13-14	Inlet (4)	Heat Transfer	B
		12	Bottom	Structural	B

Table 2.3-1 Safety Classification of Universal Storage System Components (continued)

Drawing No.	Description	Item No.	Component	Function	Safety Class
790-561 (Continued)	Weldment, Structure, Vertical Concrete Cask	11	Shield Ring	Shielding	B
	(Standard)	10	Cover	Operations	B
		4-8	Jack (Leveling)	Operations	NQ
		3	Support Ring	Structural	C
		2	Top Flange	Structural	B
		1	Shell	Structural	B
790-562	Reinforcing Bar And Concrete Placement	32	Base Plate	Structural	B
	(Standard)	31	Lift Lug	Structural	B
		29	Lag Screw	Operations	NQ
		28	Concrete Anchor	Operations	NQ
		25	Outlet Screen	Operations	NQ
		24	Inlet Screen	Operations	NQ
		20-23	Structure Weldment	Shielding/Structural	B
		16-19	Screen/Strip/Screw	Operations	NQ
		15	Concrete Shell	Shielding/ Structural	B
		13	Structure Weldment	Shielding/ Structural	B
		1-11, 33	Reinforcing Bar	Structural	B
790-563	Lid, Vertical Concrete Cask (Standard)	1	Lid	Structural/Operations	B
790-564	Shield Plug, Vertical Concrete Cask (Standard)	4	Neutron Shield Cover	Shielding/Operations	B
		3, 5	Neutron Shield	Shielding	B
		2, 6	NS Retaining Ring	Structural	B
		1	Shield Plug	Shielding	B

Table 2.3-1 Safety Classification of Universal Storage System Components (Continued)

Drawing No.	Description	Item No.	Component	Function	Safety Class
790-565	Nameplate, Vertical Concrete Cask (Standard)	1	Nameplate	Operations	NQ
790-566	100-Ton Transfer Cask	59	Nameplate	Operations	NQ
		58	Trunnion Bolt	Operations	NQ
		57	Inside Trunnion Gusset	Structural	B
		56	Low Profile Screw	Operations	C
		55	Tank Fitting	Operations	C
		54	Door Bolt	Operations	B
		53	Outside Trunnion Gusset	Structural	B
		50	Tank Shield Plate	Structural/ Shielding	B
		48	Dowel Pin	Operations	NQ
		46, 47	Fill/Drain Block	Operations	B
		44	Outer Cap	Operations	B
		42, 43	Door Wear Strip	Operations	C
		37-41	Lower Divider	Structural	B
		35, 36	Tank Fitting Block	Operations/ Shielding	B
		34	Connector	Operations	C
		33	Retaining Ring Bolt	Operations	B
		32	Upper Divider	Structural	B
		31	Gamma Shield	Shielding	B
		30	Shield Door Tab	Operations	B
		28-29	Neutron Shield Cover Plate	Operations	B
		23-27	Neutron Shield Boundary	Structural	B
		21-22	Bottom Plate	Structural	B
		20	Retaining Ring	Operations	B

Table 2.3-1 Safety Classification of Universal Storage System Components (Continued)

Drawing No.	Description	Item No.	Component	Function	Safety Class
790-566 (Continued)	100-Ton Transfer Cask	19	Lift Tab	Operations	A
		16	Door Rail	Operations	B
		15	Top Plate	Structural	B
		14	Neutron Shield	Shielding	B
		13	Trunnion Cap	Operations	C
		12	Trunnion	Structural	B
		7-11	Outer Shell	Structural	B
		2-6	Inner Shell	Structural	B
		1	Bottom Plate	Structural	B
790-570	BWR Fuel Basket	24	Heat Transfer Disk	Heat Transfer	A
	(Standard)	23	Flat Washer	Structural	C
		22	Split Spacer	Structural	A
		21	Top Spacer	Structural	A
		13-20	Tube	Structural	A
		11-12	Tie Rod	Structural	A
		10	Top Nut	Structural	A
		8-9	Tube (1-Sided)	Structural	A
		7	Spacer	Structural	A
		5-6	Tube (2-Sided)	Structural	A
		4	Drain Tube Sleeve	Operations	C
		3	Support Disk	Structural	A
		2	Top Weldment	Structural	A
		1	Bottom Weldment	Structural	A

Table 2.3-1 Safety Classification of Universal Storage System Components (Continued)

Drawing No.	Description	Item No.	Component	Function	Safety Class
790-571	Bottom Weldment, BWR Fuel Basket	3	Support	Structural	A
	(Standard)	2	Pad	Structural	A
		1	Plate	Structural	A
		3-5	Support	Structural	A
		2	Ring	Structural	A
		1	Plate	Structural	A
790-572	Top Weldment, BWR Fuel Basket (Standard)	6	Baffle	Structural	A
790-573	Support Disk and BWR Basket Details	8	Split Spacer	Structural	A
	(Standard)	7	Top Spacer	Structural	A
		5, 6	Tie Rod	Structural	A
		4	Top Nut	Structural	A
		3	Spacer	Structural	A
		1	Support Disk	Structural	A
790-574	Heat Transfer Disk, BWR (Standard)		Heat Transfer Disk	Thermal	A
790-575	BWR Fuel Tube (Standard)	7	Flange	Structural	A
		5-6	Cladding	Criticality Control	A
		3-4	Neutron Absorber	Criticality Control	A
		1-2	Tubing	Structural	A
790-581	PWR Fuel Tube (Standard)	10	Flange	Structural	A
		7-9	Cladding	Criticality Control	A
		4-6	Neutron Absorber	Criticality Control	A
		1-3	Tubing	Structural	A

Table 2.3-1 Safety Classification of Universal Storage System Components (Continued)

Drawing No.	Description	Item No.	Component	Function	Safety Class
790-582	Canister, Shell	7	Location Lug	Operations	C
	(Standard)	6	Bottom	Structural/Confinement	A
		1-5	Shell	Structural/Confinement	A
790-583	Drain Tube Assembly	7	Metal Boss Seal	Operations	C
	(Standard)	2-6	Tube	Operations	C
		1	Nipple	Operations	C
790-584	Canister Details	8	Key	Operations	C
	(Standard)	7	Spacer Ring	Structural	C
		6	Lid Support Ring	Structural	B
		5	Cover	Confinement/Operations	B
		4	Structural Lid	Structural	A
		3	Metal Boss Seal	Operations	C
		2	Nipple	Operations	C
		1	Shield Lid	Shielding/Confinement	B
790-585	Transportable Storage Canister (Standard)	24	Dowel Pin	Operations	NQ
		23	Structural Lid Plug	Operations	NQ
		22	Shield Lid Plug	Operations	NQ
		21	Key	Operations	C
		20	Backing Ring	Structural	C
		19	Structural Lid	Structural	A
		18	Cover	Confinement/ Operations	B
		17	Shield Lid Assembly	Shielding	B
		16	Lid Support Ring	Structural	B
		11-15	Drain Tube Assembly	Operations	C

Table 2.3-1 Safety Classification of Universal Storage System Components (Continued)

Drawing No.	Description	Item No.	Component	Function	Safety Class
790-587	Spacer Shim, Canister (Standard)	1-6	Spacer Shims #1 - #6	Operations	C
790-590	Loaded Vertical Concrete Cask (Standard)	19	Tab	Operations	NQ
		18	Seal Wire	Operations	C
		17	Security Seal	Operations	C
		16	Seal Tape	Operations	NQ
		15	Cover	Operations	C
		14	Washer (Lid Bolt)	Operations	NQ
		13	Lid Bolt	Operations	B
		12	Cask Lid	Operations	B
		11	Shield Plug	Shielding	B
790-591	Bottom Weldment, PWR Basket (Standard)	5, 6	Support	Structural	A
		4	Pad	Structural	A
		2, 3	Support	Structural	A
		1	Bottom Disk	Structural	A
790-592	Top Weldment, PWR Basket (Standard)	7	Baffle	Structural	A
		3-6	Support	Structural	A
		2	Ring	Structural	A
		1	Top Disk	Structural	A
790-593	Support Disk and Details, PWR (Standard)	8	Top Spacer	Structural	A
		5-7	Tie Rod	Structural	A
		4, 9, 10	Top Nut	Structural	A

Table 2.3-1 Safety Classification of Universal Storage System Components (Continued)

Drawing No.	Description	Item No.	Component	Function	Safety Class
790-593 (Continued)	Support Disk and Details, PWR (Standard)	3	Spacer	Structural	A
		2	Split Spacer	Structural	A
		1	Support Disk	Structural	A
790-594	Heat Transfer Disk, PWR (Standard)	1	Heat Transfer Disk	Thermal	A
790-595	PWR Fuel Basket	19-20	Top Nut	Structural	A
	(Standard)	17-18	Top Weldment	Structural	A
		16	Top Spacer	Structural	A
		14-15	Tube	Structural	A
		12-13	Tie Rod	Structural	A
		11	Heat Transfer Disk	Heat Transfer	A
		10	Tie Rod	Structural	A
		9	Top Nut	Structural	A
		8	Flat Washer	Structural	C
		7	Split Spacer	Structural	A
		6	Spacer	Structural	A
		4-5	Drain Tube Sleeve/Tube	Operations	C
		3	Support Disk	Structural	A
		2	Top Weldment	Structural	A
		1	Bottom Weldment	Structural	A
790-605	BWR Fuel Tube, Over-Sized (Standard)	7	Flange	Structural	A
		5-6	Cladding	Criticality Control	A
		3-4	Neutron Absorber	Criticality Control	A
		1-2	Tubing	Structural	A

Table 2.3-1 Safety Classification of Universal Storage System Components (Continued)

Drawing No.	Description	Item No.	Component	Function	Safety Class
790-613	Supplemental Shielding, VCC Inlets	4	Shims	Operations	NQ
		3	Paint	Operations	NQ
		2	Pipe	Shielding	B
		1	Side Plate	Shielding	B
790-617	Door Stop	6	Attachment Screw	Operations	NQ
		5	Lock Pin	Operations	NQ
		4	Handle	Operations	NQ
		3	Back Plate	Operations	NQ
		2	Top Plate	Operations	NQ
		1	Bottom Plate	Operations	NQ
412-502	Maine Yankee (MY) Fuel Can Details, NAC-UMS®	13	Support Ring	Structural/Operations	A
		12	Lift Tee	Structural/Operations	B
		10	Tube Body	Structural/Criticality	A
		9	Side Plate	Structural/Criticality	A
		8	Bottom Plate	Structural/Criticality	A
		7	Backing Screen	Operations	C
		6	Filter Screen	Confinement	B
		4	Wiper	Operations	C
		3	Lid Guide	Operations	C
		2	Lid Plate	Structural/Criticality	A
		1	Lid Collar	Confinement	A
792-561	Weldment, Structure, Vertical Concrete Cask	36	Lifting Nut	Operations	NQ
	(Advanced)	27-30	Shell	Shielding/Structural	B
		25	Baffle	Heat Transfer	B

Table 2.3-1 Safety Classification of Universal Storage System Components

Drawing No.	Description	Item No.	Component	Function	Safety Class
792-561 (Continued)	Weldment, Structure, Vertical Concrete Cask	21-24	Outlet	Heat Transfer	B
	(Advanced)	20	Shield Plate	Shielding	B
		17	Nelson Stud	Structural	B
		16	Base Plate	Structural	B
		15	Stand	Structural	B
		13-14	Inlet	Heat Transfer	B
		12	Bottom	Structural	B
		11	Shield Ring	Shielding	B
		10	Cover	Operations	B
		4-8	Jack (Leveling)	Operations	NQ
		3	Support Ring	Structural	C
		2	Top Flange	Structural	B
		1	Shell	Structural	B
792-562	Reinforcing Bar And Concrete Placement	32	Base Plate	Structural	B
	(Advanced)	31	Lift Lug	Structural	B
		29	Lag Screw	Operations	NQ
		28	Concrete Anchor	Operations	NQ
		25	Outlet Screen	Operations	NQ
		24	Inlet Screen	Operations	NQ
		20-23	Structure Weldment	Shielding/Structural	B
		16-19	Screen/Strip/Screw	Operations	NQ
		15	Concrete Shell	Shielding/ Structural	B
		13	Structure Weldment	Shielding/ Structural	B
		1-11, 33	Reinforcing Bar	Structural	B
792-563	Lid, Vertical Concrete Cask	1	Lid	Structural/Operations	B

Table 2.3-1 Safety Classification of Universal Storage System Components (continued)

Drawing No.	Description	Item No.	Component	Function	Safety Class
792-564	Shield Plug, Vertical Concrete Cask	5	Neutron Shield Cover	Shielding/Operations	B
	(Advanced)	2, 3	Neutron Shield	Shielding	B
		4	NS Retaining Ring	Structural	B
		1	Shield Plug	Shielding	B
792-565	Nameplate, Vertical Concrete Cask (Advanced)	1	Nameplate	Operations	NQ
792-567	Channel Weldment, Vertical Concrete Cask (VCC) (Advanced)	3, 6, 9, 12	Base Support	Structural	B
		2, 5, 8, 11, 14	Rig Support	Structural	B
		1, 4, 7, 10	Flange Support	Structural	B
792-574	Assembly, Drain Tube, Canister (Advanced)	3	Metal Boss Seal	Structural	C
		2	Tube	Structural	C
		4-7	Tube	Structural	C
		1	Nipple	Structural	C
792-577	Transportable Storage Canister (Advanced)	12	Dowel Pin	Operations	NQ
		11	Structural Lid Insert	Operations	NQ
		10	Shield Lid Insert	Operations	NQ
		9	Key	Operations	C
		8	Spacer Ring	Structural	C
		26	Structural Lid	Structural	A

Table 2.3-1 Safety Classification of Universal Storage System Components (Continued)

Drawing No.	Description	Item No.	Component	Function	Safety Class
792-577 (Continued)	Transportable Storage Canister (Advanced)	6	Cover	Confinement/ Operations	B
		5	Shield Lid Assembly	Shielding	B
		4	Lid Support Ring	Structural	B
		3, 15, 23-25	Drain Tube Assembly	Operations	C
792-590	Loaded Vertical Concrete Cask (Advanced)	19	Tab	Operations	NQ
		18	Seal Wire	Operations	C
		17	Security Seal	Operations	C
		16	Seal Tape	Operations	NQ
		15	Cover	Operations	C
		14	Washer (Lid Bolt)	Operations	NQ
		13	Lid Bolt	Operations	B
		12	Cask Lid	Operations	B
		11	Shield Plug	Shielding	B
792-591	Bottom Assembly, Fuel Basket Assembly, 32 Element PWR (Advanced)	5	Support Tab	Structural	A
		4	Bottom Long Bar	Structural	A
		1, 2	Bottom Short Bar	Structural	A
792-592	Top Assembly, Fuel Basket Assembly, 32 Element PWR (Advanced)	13	Support Tab	Structural	A
		7-12	Top Long Bar	Structural	A
		1-6	Top Short Bar	Structural	A

Table 2.3-1 Safety Classification of Universal Storage System Components (Continued)

Drawing No.	Description	Item No.	Component	Function	Safety Class
792-593	Side Weldment, Fuel Basket Body, 32 Element PWR (Advanced)	1-12	Side Weldment Plate	Structural	A
792-594	Corner Assembly, Fuel Basket Assy, 32 Element PWR (Advanced)	1-9	Corner Plate	Structural	A
792-595	Fuel Basket Assembly, 32 Element PWR (Advanced)	68-70	Cooling Shunt	Operations	A
		38-49	Cooling Insert	Operations	A
		56-61	Top Long Bar	Structural	A
		50-55	Top Short Bar	Structural	A
		11-13	Drain Tube Sleeve	Operations	C
		8-10	Corner Assy	Structural	A
		5-7	Side Weldment	Structural	A
		3, 4	Bottom Long Bar	Structural	A
		1, 2	Bottom Short Bar	Structural	A
792-597	Shell Weldment Canister, PWR (Advanced)	3	Location Lug	Operations	C
		2	Bottom	Structural	A
		1, 4, 6	Shell	Structural	A

Table 2.3-1 Safety Classification of Universal Storage System Components (Continued)

Drawing No.	Description	Item No.	Component	Function	Safety Class
792-598	Details, Canister PWR (Advanced)	8	Key	Structural	C
		7	Spacer Ring	Structural	C
		6	Lid Support Ring	Structural	B
		5	Cover	Structural	B
		4	Structural Lid	Structural	A
		3	Metal Boss Seal	Operations	C
		2	Nipple	Operations	C
		1	Shell Lid	Structural	B
792-600	Neutron Absorber Fuel Basket Assembly, 32 Element PWR (Advanced)	1-15	Neutron Absorber	Operations	A
792-601	Cooling Inserts, Fuel Basket Assembly, 32 Element PWR (Advanced)	1-30	Cooling Plate	Operations	A
792-602	Basket Plates (Class 3) Fuel Basket Assembly, 32 Element PWR (Advanced)	2	Plate	Structural	A
		1, 3-5	Spacer Plate	Structural	A
792-603	Basket Plates (Class 2) Fuel Basket Assembly, 32 Element PWR (Advanced)	2	Plate	Structural	A
		1, 3-5	Spacer Plate	Structural	A

Table 2.3-1 Safety Classification of Universal Storage System Components (Continued)

Drawing No.	Description	Item No.	Component	Function	Safety Class
792-604	Basket Plates (Class 1) Fuel Basket Assembly, 32 Element PWR (Advanced)	2	Plate	Structural	A
		1, 3-5	Spacer Plate	Structural	A
792-606	Cooling Shunt Fuel Basket Assembly, 32 Element PWR (Advanced)	1-3	Cooling Shunt	Operations	A

THIS PAGE INTENTIONALLY LEFT BLANK

2.4 Decommissioning Considerations

The principal elements of the Universal Storage System are the Vertical Concrete Cask and the Transportable Storage Canister.

The concrete cask provides biological shielding and physical protection for the contents of the canister during long-term storage. The concrete that provides biological shielding is not expected to become contaminated during the period of use, as it does not come into contact with other contaminated objects or surfaces. The concrete cask is not expected to become surface contaminated during use, except through incidental contact with other contaminated surfaces. Incidental contact could occur at the interior surface (liner) of the concrete cask, the top surface that supports the transfer cask during loading and unloading operations, and the base plate of the concrete cask that supports the canister. All of these surfaces are made of carbon steel, and it is anticipated that these surfaces could be decontaminated as necessary for decommissioning.

Activation of the carbon steel liner, concrete, support plates, and reinforcing bar could occur due to neutron flux from the stored fuel. Since the neutron flux rate is low, only minimal activation of carbon steel in the concrete cask is expected to occur. The activity concentrations from activation of storage cask components are listed in Tables 2.4-1 through 2.4-4. Tables 2.4-1 and 2.4-2 provide the activation summaries of the concrete cask and canister for the design-basis PWR fuel, while Tables 2.4-3 and 2.4-4 provide the summaries for the design-basis BWR fuel. These tables include the radiologically significant isotopes, together with a total concentration of all activated nuclides in the respective component. The total concentrations listed include activities of radionuclides, which do not have any substantial contribution to radiation dose and are not specifically identified by 10 CFR 61 waste classification. In particular, the isotope contributing the majority of the carbon steel total curie activity is ^{55}Fe, which decays following electron capture and is not of radiological concern. The activity concentrations for the Standard canisters are provided for information only, since the canister is not expected to be disassembled for disposal. The activity concentrations for the Advanced canister is not provided.

Decommissioning of the concrete cask will involve the removal of the canister, and the subsequent disassembly of the concrete cask. It is expected that the concrete will be broken up, and steel components segmented, to reduce volume. Any contaminated or activated items are expected to qualify for near-surface disposal as low specific activity material. The activity concentrations from activation of concrete cask components resulting from the design basis PWR and BWR fuel assemblies are listed in Tables 2.4-1 and 2.4-3, respectively.

The Transportable Storage Canister is designed and fabricated to be suitable for use as part of the waste package for permanent disposal in a deep Mined Geological Disposal System (i.e., it meets the requirements of the DOE MPC Design Procurement Specification [20]). The canister is fabricated from materials having high long-term corrosion resistance, and it contains no paints or coatings that could adversely affect its permanent disposal. Consequently, decommissioning of the canister will occur only if the fuel contained in the canister had to be removed, or if current requirements for disposal were to change. Decommissioning of the canister will require that the closure welds at the canister structural lid, shield lid, and shield lid port covers be cut, so that the spent fuel can be removed. Removal of the contents of the canister will require that the canister be returned to a spent fuel pool or dry unloading facility, such as a hot cell. Closure welds can be cut either manually or with automated equipment, with the procedure being essentially the reverse of that used to initially close the canister.

Following removal of its contents, the canister interior is expected to have significant contamination, and the bottom of the canister may contain "crud" or other residual material. Some effort may be required to remove the surface contamination prior to disposal; however, in practice, it will not be absolutely necessary to decontaminate the canister internals. Since the canister internal contamination will consist only of by-product materials, any contaminated canister and internal components are expected to qualify for near-surface disposal as low specific activity waste without internal contamination. Any required internal decontamination is facilitated, should it become necessary, by the smooth surfaces of the canister and the basket, and by the design that precludes the presence of crud traps. Since the neutron flux rate from the stored fuel is low, only minimal activation of the canister is expected to occur. The activity concentrations from activation of canister components resulting from the design basis PWR and BWR fuel assemblies are listed in Tables 2.4-2 and 2.4-4, respectively.

The unloaded canister can also qualify as a strong, tight container for other waste. In this case, the canister can be filled, within weight limits, with other qualified waste, closed, and transported to a near-surface disposal site. Use of the canister for this purpose can reduce decommissioning costs by avoiding decontamination, segmenting, and repackaging.

The storage pad, fence, and supporting utility fixtures are not expected to require decontamination as a result of use of the Universal Storage System. The design of the cask and canister precludes the release of contamination from the contents over the period of use of the system. Consequently, these items may be reused or disposed of as locally generated clean waste.

Table 2.4-1 Activity Concentration Summary for the Concrete Cask - PWR Design Basis Fuel (Ci/m^3) for the Standard Configuration

Isotope[1]	Concrete Shell	Shell Liner	Shield Plug	Lid	Cover Plate	Bottom	Base Plate
^{14}C	--	--	2.35E-08	--	--	--	--
^{45}Ca	4.62E-06	--	--	--	--	--	--
^{54}Mn	5.13E-08	6.97E-02	1.34E-03	1.63E-04	3.17E-06	5.56E-02	1.88E-02
^{55}Fe	2.30E-05	1.22E+00	2.12E-01	5.49E-02	3.85E-05	7.15E-01	2.27E-01
^{60}Co	1.95E-06	3.43E-04	7.22E-05	1.38E-05	1.54E-05	2.71E-04	8.58E-05
^{63}Ni	--	--	--	--	2.02E-02	--	--
Total	3.09E-05	1.30E+00	2.15E-01	5.54E-02	2.06E-02	7.77E-01	2.48E-01

1. 40-year activation, 1-week cooling.

Table 2.4-2 Activity Concentration Summary for the Canister – PWR Design Basis Fuel (Ci/m^3) for the Standard Configuration

Isotope[1]	Wall	Shield Lid	Structural Lid	Bottom
^{54}Mn	9.94E-05	3.32E-04	4.42E-06	1.00E-04
^{55}Fe	7.94E-04	8.26E-04	3.67E-04	1.05E-03
^{60}Co	3.15E-04	3.31E-04	1.47E-04	4.22E-04
^{59}Ni	3.54E-07	3.67E-07	1.64E-07	4.66E-07
^{63}Ni	4.17E-01	4.33E-01	1.93E-01	5.49E-01
Total	4.27E-01	4.43E-01[2]	1.97E-01[2]	5.63E-01[2]

1. 40-year activation, 1 -week cooling.
2. ^{32}P accounts for most of the unlisted total activity.

Table 2.4-3 Activity Concentration Summary for the Concrete Cask – BWR Design Basis Fuel (Ci/m^3) for the Standard Configuration

Isotope[1]	Concrete Shell	Shell Liner	Shield Plug	Lid	Cover Plate	Bottom	Base Plate
^{14}C	--	--	3.57E-08	--	--	--	--
^{45}Ca	7.91E-06	--	--	--	--	--	--
^{54}Mn	7.74E-08	1.07E-01	1.97E-03	2.39E-04	1.37E-06	7.06E-02	2.40E-02
^{55}Fe	3.93E-05	2.10E00	3.23E-01	8.29E-02	2.08E-05	1.13E-04	3.52E-01
^{60}Co	3.33E-06	5.93E-04	1.10E-04	2.08E-05	8.35E-06	4.26E-04	1.33E-04
^{63}Ni	--	--	--	--	1.09E-02	--	--
Total	5.28E-05	2.22E00	3.27E-01	8.37E-02	1.12E-02	1.21E00	3.79E-01

1. 40-year activation, 1-week cooling.

Table 2.4-4 Activity Concentration Summary for the Canister – BWR Design Basis Fuel (Ci/m^3) for the Standard Configuration

Isotope[1]	Wall	Shield Lid	Structural Lid	Bottom
^{54}Mn	1.53E-04	4.89E-05	6.51E-06	1.26E-04
^{55}Fe	1.39E-03	1.26E-06	5.57E-04	1.68E-03
^{60}Co	5.52E-04	5.04E-04	2.22E-04	6.73E-04
^{59}Ni	6.21E-07	5.60E-07	2.48E-07	7.46E-07
^{63}Ni	7.31E-01	6.60E-01	2.92E-01	8.79E-01
Total	7.49E-01	6.76E-01	2.99E-01	9.00E-01

1. 40-year activation, 1-week cooling.

Table 2.4-5 Activity Concentration Summary for the Concrete Cask - PWR Design Basis Fuel (Ci/m^3) for the Advanced Configuration

Isotope[1]	Concrete Shell	Shell Liner	Shield Plug	Lid	Cover Plate	Bottom	Base Plate
^{14}C	--	--	2.35E-08	--	--	--	--
^{45}Ca	4.62E-06	--	--	--	--	--	--
^{54}Mn	5.13E-08	6.97E-02	1.34E-03	1.63E-04	3.17E-06	5.56E-02	1.88E-02
^{55}Fe	2.30E-05	1.22E+00	2.12E-01	5.49E-02	3.85E-05	7.15E-01	2.27E-01
^{60}Co	1.95E-06	3.43E-04	7.22E-05	1.38E-05	1.54E-05	2.71E-04	8.58E-05
^{63}Ni	--	--	--	--	2.02E-02	--	--
Total	3.09E-05	1.30E+00	2.15E-01	5.54E-02	2.06E-02	7.77E-01	2.48E-01

1. 40-year activation, 1-week cooling.

THIS PAGE INTENTIONALLY LEFT BLANK

2.5 References

1. ASME Boiler and Pressure Vessel Code, Division I, Section III, Subsection NB, "Class 1 Components," 1995 Edition with 1995 Addenda.

2. ASME Boiler and Pressure Vessel Code, Division I, Section III, Subsection NG, "Core Support Structures," 1995 Edition with 1995 Addenda.

3. Nuclear Regulatory Commission, "Buckling Analysis of Spent Fuel Basket," NUREG/CR-6322, May 1995.

4. American Concrete Institute, "Code Requirements for Nuclear Safety Related Concrete Structures (ACI 349-85) and Commentary (ACI 349R-85)," March 1986.

5. American Concrete Institute, "Building Code Requirements for Structural Concrete (ACI 318-95) and Commentary (ACI 318R-95), October 1995.

6. ANSI N14.6-1993, "American National Standard for Radioactive Materials - Special Lifting Devices for Shipping Containers Weighing 10,000 Pounds (4,500 kg) or More," American National Standards Institute, Inc., June 1993.

7. Nuclear Regulatory Commission, "Control of Heavy Loads at Nuclear Power Plants," NUREG-0612, July 1980.

8. Levy, et al., Pacific Northwest Laboratory, "Recommended Temperature Limits for Dry Storage of Spent Light-Water Zircalloy Clad Fuel Rods in Inert Gas," PNL-6189, May 1987.

9. Nuclear Regulatory Commission, "Design Basis Tornado for Nuclear Power Plants," Regulatory Guide 1.76, April 1974.

10. Nuclear Regulatory Commission, "Standard Review Plan," NUREG-0800, April 1996.

11. Code of Federal Regulations, "Licensing Requirements for the Independent Storage of Spent Nuclear Fuel and High-Level Radioactive Waste," Part 72, Title 10, January 1996.

12. ANSI/ASCE 7-93 (formerly ANSI A58.1), "Minimum Design Loads for Buildings and Other Structures," American Society of Civil Engineers, May 1994.

13. ANSI/ANS-57.9-1992, "Design Criteria for an Independent Spent Fuel Storage Installation (Dry Type)," American Nuclear Society, May 1992.

14. ASHRAE Handbook, "Fundamentals," American Society of Heating, Refrigeration, and Air Conditioning Engineers, 1993.

15. Code of Federal Regulations, "Packaging and Transportation of Radioactive Materials," Part 71, Title 10, April 1996.

16. Nuclear Regulatory Commission, "Load Combinations for the Structural Analysis of Shipping Casks for Radioactive Material," Regulatory Guide 7.8, March 1989.

17. Nuclear Regulatory Commission, "Establishing Quality Assurance Programs for Packaging Used in the Transport of Radioactive Material," Regulatory Guide 7.10, June 1986.

18. Nuclear Regulatory Commission, "Classification of Transportation Packaging and Dry Spent Fuel Storage System Components According to Importance to Safety," NUREG/CR-6407, February 1996.

19. Code of Federal Regulations, "Standards for Protection Against Radiation," Part 20, Title 10, January 1991.

20. Department of Energy, "Multi-Purpose Canister (MPC) Subsystem Design Procurement Specification," Document No. DBG000000-01717-6300-00001, Rev. 6, June 1996.

21. Johnson, A.B., and Gilbert, E.R., Pacific Northwest Laboratory, "Technical Basis for Storage of Zircaloy-Clad Spent Fuel in Inert Gases," PNL-4835, September, 1983.

22. Garde, M., "Hot Cell Examination of Extended Burnup Fuel from Fort Calhoun," DOE/ET/34030-11, CEND-427A, September 1986.

23. Newman, L. M., "The Hot Cell Examination of Oconee 1 Fuel Rods after Five Cycles of Irradiation," DOE/ET/34212-50, BAW-1874L, October 1986.

Table of Contents

3.0 STRUCTURAL EVALUATION 3.1-1

3.1 Structural Design 3.1-2
- 3.1.1 Discussion 3.1-2
- 3.1.2 Design Criteria 3.1-8

3.2 Weights and Centers of Gravity 3.2-1

3.3 Mechanical Properties of Materials 3.3-1
- 3.3.1 Primary Component Materials 3.3-1
- 3.3.2 Fracture Toughness Considerations 3.3-16

3.4 General Standards 3.4.1-1
- 3.4.1 Chemical and Galvanic Reactions 3.4.1-1
  - 3.4.1.1 Component Operating Environment 3.4.1-1
  - 3.4.1.2 Component Material Categories 3.4.1-2
  - 3.4.1.3 General Effects of Identified Reactions 3.4.1-12
  - 3.4.1.4 Adequacy of the Canister Operating Procedures 3.4.1-12
  - 3.4.1.5 Effects of Reaction Products 3.4.1-12
- 3.4.2 Positive Closure 3.4.2-1
- 3.4.3 Lifting Devices 3.4.3-1
  - 3.4.3.1 Standard Vertical Concrete Cask Lift Evaluation 3.4.3-4
  - 3.4.3.2 Standard Canister Lift 3.4.3-20
  - 3.4.3.3 Standard Transfer Cask Lift 3.4.3-27
  - 3.4.3.4 Advanced Vertical Concrete Cask Lift Evaluation 3.4.3-55
  - 3.4.3.5 Advanced Canister Lift Evaluation 3.4.3-70
  - 3.4.3.6 Advanced Transfer Cask Lift Evaluation 3.4.3-76
  - 3.4.3.7 100-Ton Transfer Cask Lift Evaluation 3.4.3-108
- 3.4.4 Normal Operating Conditions Analysis 3.4.4-1
  - 3.4.4.1 Standard Canister and Basket Analyses 3.4.4-1
  - 3.4.4.2 Standard Vertical Concrete Cask Analyses 3.4.4-63
  - 3.4.4.3 Advanced Canister and Basket Analyses 3.4.4-78
  - 3.4.4.4 Advanced Vertical Concrete Cask Analyses 3.4.4-112

Table of Contents (Continued)

3.4.5 Cold 3.4.5-1

3.5 Fuel Rods 3.5-1

3.6 Structural Evaluation of Site Specific Spent Fuel 3.6-1
3.6.1 Structural Evaluation of Maine Yankee Site Specific Spent Fuel for Normal Operating Conditions 3.6-1
3.6.1.1 Maine Yankee Intact Spent Fuel 3.6-1
3.6.1.2 Maine Yankee Damaged Spent Fuel 3.6-2

3.7 References 3.7-1

3.8 Carbon Steel Coatings Technical Data 3.8-1
3.8.1 Carboline 890 ..... 3.8-2
3.8.2 Keeler & Long E-Series Epoxy Enamel 3.8-4
3.8.3 Description of Electroless Nickel Coating 3.8-8

List of Figures

Figure 3.1-1 Principal Components of the Universal Storage System 3.1-9
Figure 3.4.2-1 Standard Canister Welded Closure 3.4.2-2
Figure 3.4.2-2 Advanced Canister Welded Closure 3.4.2-3
Figure 3.4.3.2-1 Standard Canister Lift Finite Element Model 3.4.3-25
Figure 3.4.3.2-2 Standard Canister Lift Model Stress Intensity Contours (psi) 3.4.3-26
Figure 3.4.3.3-1 Finite Element Model for the Standard Transfer Cask Trunnion and Shells 3.4.3-44
Figure 3.4.3.3-2 Node Locations for the Standard Transfer Cask Outer Shell Adjacent to Trunnion 3.4.3-45
Figure 3.4.3.3-3 Node Locations for the Standard Transfer Cask Inner Shell Adjacent to Trunnion 3.4.3-46
Figure 3.4.3.3-4 Stress Intensity Contours (psi) for the Standard Transfer Cask Outer Shell Element Top Surface 3.4.3-47
Figure 3.4.3.3-5 Stress Intensity Contours (psi) for the Standard Transfer Cask Outer Shell Element Bottom Surface 3.4.3-48
Figure 3.4.3.3-6 Stress Intensity Contours (psi) for the Standard Transfer Cask Inner Shell Element Top Surface 3.4.3-49
Figure 3.4.3.3-7 Stress Intensity Contours (psi) for the Standard Transfer Cask Inner Shell Element Bottom Surface 3.4.3-50
Figure 3.4.3.4-1 Advanced Concrete Cask Base Weldment ANSYS Model 3.4.3-69
Figure 3.4.3.5-1 Advanced Canister Lift Finite Element Model 3.4.3-74
Figure 3.4.3.5-2 Advanced Canister Lid Weld Detail 3.4.3-75
Figure 3.4.3.6-1 Advanced UMS® Transfer Cask Finite Element Model 3.4.3-92
Figure 3.4.3.6-2 Node Locations for Advanced Transfer Cask Outer Shell Adjacent to Trunnion 3.4.3-93
Figure 3.4.3.6-3 Node Locations for Advanced Transfer Cask Inner Shell Adjacent to Trunnion 3.4.3-94
Figure 3.4.3.6-4 Node Locations for Advanced Transfer Cask Stiffener Plate Above Trunnion 3.4.3-95
Figure 3.4.3.6-5 Stress Intensity Contours (psi) for Advanced Transfer Cask Outer Shell Element Top Surface 3.4.3-96
Figure 3.4.3.6-6 Stress Intensity Contours (psi) for Advanced Transfer Cask Outer Shell Element Bottom Surface 3.4.3-97

List of Figures (Continued)

Figure 3.4.3.6-7 Stress Intensity Contours (psi) for Advanced Transfer Cask Inner Shell Element Top Surface 3.4.3-98
Figure 3.4.3.6-8 Stress Intensity Contours (psi) for Advanced Transfer Cask Inner Shell Element Bottom Surface 3.4.3-99
Figure 3.4.3.6-9 Stress Intensity Contours (psi) for Advanced Transfer Cask Stiffener Plate Element Top Surface 3.4.3-100
Figure 3.4.3.6-10 Stress Intensity Contours (psi) for Advanced Transfer Cask Stiffener Plate Element Bottom Surface 3.4.3-101
Figure 3.4.3.7-1 100-Ton Transfer Cask Vertical Lift Finite Element Model 3.4.3-113
Figure 3.4.3.7-2 Node Map of the 100-Ton Transfer Cask Trunnion Region – Outer Shell 3.4.3-114
Figure 3.4.3.7-3 Finite Element Model of the 100-Ton Transfer Cask Neutron Shield Shell 3.4.3-115
Figure 3.4.3.7-4 100-Ton Transfer Cask Horizontal Handling Finite Element Model ... 3.4.3-116
Figure 3.4.3.7-5 Node Map Showing Location of Maximum Stresses for Horizontal Model 3.4.3-117
Figure 3.4.4.1-1 Standard Canister Finite Element Model 3.4.4-20
Figure 3.4.4.1-2 Weld Regions of the Standard Canister Finite Element Model at Structural and Shield Lids 3.4.4-21
Figure 3.4.4.1-3 Bottom Plate of the Standard Canister Finite Element Model 3.4.4-22
Figure 3.4.4.1-4 Locations for Section Stresses in the Standard Canister Finite Element Model 3.4.4-23
Figure 3.4.4.1-5 Standard BWR Basket Showing Typical Fuel Basket Components 3.4.4-24
Figure 3.4.4.1-6 Standard PWR Basket Support Disk Finite Element Model 3.4.4-25
Figure 3.4.4.1-7 Standard PWR Basket Support Disk Sections for Stress Evaluation (Left Half) 3.4.4-26
Figure 3.4.4.1-8 Standard PWR Basket Support Disk Sections for Stress Evaluation (Right Half) 3.4.4-27
Figure 3.4.4.1-9 PWR Fuel Tube for the Standard Configuration 3.4.4-28
Figure 3.4.4.1-10 Standard PWR Top Weldment Plate Finite Element Model 3.4.4-29
Figure 3.4.4.1-11 Standard PWR Bottom Weldment Plate Finite Element Model 3.4.4-30

List of Figures (Continued)

Figure 3.4.4.1-12 Standard BWR Basket Support Disk Finite Element Model 3.4.4-31
Figure 3.4.4.1-13 Standard BWR Basket Support Disk Sections for Stress Evaluation (Quadrant I) 3.4.4-32
Figure 3.4.4.1-14 Standard BWR Basket Support Disk Sections for Stress Evaluation (Quadrant II) 3.4.4-33
Figure 3.4.4.1-15 Standard BWR Fuel Basket Support Disk Sections for Stress Evaluation (Quadrant III) 3.4.4-34
Figure 3.4.4.1-16 Standard BWR Fuel Basket Support Disk Sections for Stress Evaluation (Quadrant IV) 3.4.4-35
Figure 3.4.4.1-17 BWR Class 5 Fuel Tube for the Standard Configuration 3.4.4-36
Figure 3.4.4.1-18 Standard BWR Top Weldment Plate Finite Element Model 3.4.4-37
Figure 3.4.4.1-19 Standard BWR Bottom Weldment Plate Finite Element Model 3.4.4-38
Figure 3.4.4.2-1 Standard Concrete Cask Thermal Stress Model 3.4.4-70
Figure 3.4.4.2-2 Standard Concrete Cask Thermal Stress Model - Vertical and Horizontal Rebar Detail 3.4.4-71
Figure 3.4.4.2-3 Standard Concrete Cask Thermal Stress Model Boundary Conditions 3.4.4-72
Figure 3.4.4.2-4 Standard Concrete Cask Thermal Stress Model Axial Stress Evaluation Locations 3.4.4-73
Figure 3.4.4.2-5 Standard Concrete Cask Thermal Model Circumferential Stress Evaluation Locations 3.4.4-74
Figure 3.4.4.3-1 Advanced Canister Three-Dimensional Finite Element Model 3.4.4-93
Figure 3.4.4.3-2 Structural and Shield Lid Detail for the Advanced Canister Model 3.4.4-94
Figure 3.4.4.3-3 Bottom Plate of the Advanced Canister Finite Element Model 3.4.4-95
Figure 3.4.4.3-4 Stress Section Locations for the Advanced Canister Model 3.4.4-96
Figure 3.4.4.3-5 Advanced PWR Basket Finite Element Model for Normal Storage Conditions 3.4.4-97
Figure 3.4.4.3-6 Advanced PWR Basket Bottom Weldment in the Basket Model 3.4.4-98
Figure 3.4.4.3-7 Advanced PWR Basket Plate Thermal Model (Quarter Symmetry) 3.4.4-99
Figure 3.4.4.3-8 Geometry of the Advanced Basket Cooling Shunt 3.4.4-100
Figure 3.4.4.3-9 Cooling Shunt Finite Element Model 3.4.4-101
Figure 3.4.4.4-1 Advanced Concrete Cask Thermal Stress Model 3.4.4-118

List of Figures (Continued)

Figure 3.4.4.4-2 Advanced Concrete Cask Thermal Stress Model - Vertical and Horizontal Rebar Detail 3.4.4-119
Figure 3.4.4.4-3 Advanced Concrete Cask Thermal Model Boundary Conditions 3.4.4-120
Figure 3.4.4.4-4 Advanced Concrete Cask Thermal Model Axial Stress Evaluation Locations 3.4.4-121
Figure 3.4.4.4-5 Advanced Concrete Cask Thermal Model Circumferential Stress Evaluation Locations 3.4.4-122

List of Tables

Table 3.2-1 Standard Universal Storage System Weights and CGs – PWR Configuration 3.2-2
Table 3.2-2 Standard Universal Storage System Weights and CGs – BWR Configuration 3.2-3
Table 3.2-3 Advanced Universal Storage System Weights and CGs – PWR Configuration 3.2-4
Table 3.2-4 Under-Hook Weights for the Standard Transfer Cask with Standard Canister 3.2-5
Table 3.2-5 Under-Hook Weights for the Advanced Transfer Cask with Standard Canister 3.2-5
Table 3.2-6 Under-Hook Weights for the Advanced Transfer Cask with Advanced Canister 3.2-5
Table 3.2-7 Under-Hook Weights for the 100-Ton Transfer Cask with Standard Canister 3.2-6
Table 3.2-8 Under-Hook Weights for the 100-Ton Transfer Cask with Advanced Canister 3.2-6
Table 3.3-1 Mechanical Properties of SA-240 and A-240 Type 304 Stainless Steel 3.3-3
Table 3.3-2 Mechanical Properties of SA-479, Type 304 Stainless Steel 3.3-4
Table 3.3-3 Mechanical Properties of SA-240, Type 304L Stainless Steel 3.3-5
Table 3.3-4 Mechanical Properties of SA-564 and SA-693, Type 630, 17-4 PH Stainless Steel 3.3-6
Table 3.3-5 Mechanical Properties of A-36 Carbon Steel 3.3-7
Table 3.3-6 Mechanical Properties of A-615, Grade 60 and Grade 75, Reinforcing Steel 3.3-7
Table 3.3-7 Mechanical Properties of SA-533, Type B, Class 2 Carbon Steel 3.3-8
Table 3.3-8 Mechanical Properties of A-588, Type A or B Low Alloy Steel 3.3-9
Table 3.3-9 Mechanical Properties of SA-350/A-350, Grade LF 2, Class 1 Low Alloy Steel 3.3-10
Table 3.3-10 Mechanical Properties of SA-193, Grade B6, High Alloy Steel Bolting Material 3.3-11
Table 3.3-11 Mechanical Properties of 6061-T651 and 6061-T6 Aluminum Alloy 3.3-12
Table 3.3-12 Mechanical Properties of Concrete 3.3-13
Table 3.3-13 Mechanical Properties of Neutron Shield Materials 3.3-13
Table 3.3-14 Mechanical Properties of SA-537 Class 2 Carbon Steel 3.3-14

List of Tables (Continued)

Table 3.3-15 Mechanical Properties of METAMIC 6061 ..... 3.3-15
Table 3.4.3.3-1 Top 30 Stresses for the Standard Transfer Cask Outer Shell Element Top Surface 3.4.3-51
Table 3.4.3.3-2 Top 30 Stresses for the Standard Transfer Cask Outer Shell Element Bottom Surface 3.4.3-52
Table 3.4.3.3-3 Top 30 Stresses for the Standard Transfer Cask Inner Shell Element Top Surface 3.4.3-53
Table 3.4.3.3-4 Top 30 Stresses for the Standard Transfer Cask Inner Shell Element Bottom Surface 3.4.3-54
Table 3.4.3.6-1 Top 30 Stresses for Advanced Transfer Cask Outer Shell Element Top Surface 3.4.3-102
Table 3.4.3.6-2 Top 30 Stresses for Advanced Transfer Cask Outer Shell Element Bottom Surface 3.4.3-103
Table 3.4.3.6-3 Top 30 Stresses for Advanced Transfer Cask Inner Shell Element Top Surface 3.4.3-104
Table 3.4.3.6-4 Top 30 Stresses for Advanced Transfer Cask Inner Shell Element Bottom Surface 3.4.3-105
Table 3.4.3.6-5 Top 30 Stresses for Advanced Transfer Cask Stiffener Plate Element Top Surface 3.4.3-106
Table 3.4.3.6-6 Top 30 Stresses for Advanced Transfer Cask Stiffener Plate Element Bottom Surface 3.4.3-107
Table 3.4.3.7-1 Top 30 Stresses for 100-Ton Transfer Cask Shells, Vertical Handling, Shell Element Top Surface 3.4.3-118
Table 3.4.3.7-2 Top 30 Stresses for 100-Ton Transfer Cask Shells, Vertical Handling, Shell Element Bottom Surface 3.4.3-119
Table 3.4.3.7-3 Top 30 Primary Membrane (P_m) Stresses for the 100-Ton Transfer Cask Vertical Handling 3.4.3-120
Table 3.4.3.7-4 Top 30 Primary Membrane plus Bending ($P_m + P_b$) Stresses for the 100-Ton Transfer Cask Vertical Handling, Shell Element Top Surface 3.4.3-121
Table 3.4.3.7-5 Top 30 Primary Membrane plus Bending ($P_m + P_b$) Stresses for the 100-Ton Transfer Cask Vertical Handling, Shell Element Bottom Surface 3.4.3-122

List of Tables (Continued)

Table 3.4.3.7-6 Top 30 Primary plus Secondary (P + Q) Stresses for 100-Ton Transfer Cask Vertical Handling and Thermal, Shell Element Top Surface 3.4.3-123
Table 3.4.3.7-7 Top 30 Primary plus Secondary (P + Q) Stresses for 100-Ton Transfer Cask Vertical Handling and Thermal, Shell Element Bottom Surface 3.4.3-124
Table 3.4.3.7-8 Top 30 Primary Membrane (P_m) Stresses for the 100-Ton Transfer Cask Horizontal Handling, Supported by Outer Shell 3.4.3-125
Table 3.4.3.7-9 Top 30 Primary Membrane plus Bending ($P_m + P_b$) Stresses for the 100-Ton Transfer Cask Horizontal Handling, Supported by Outer Shell, Shell Element Top Surface 3.4.3-126
Table 3.4.3.7-10 Top 30 Primary Membrane plus Bending ($P_m + P_b$) Stresses for the 100-Ton Transfer Cask Horizontal Handling, Supported by Outer Shell, Shell Element Bottom Surface 3.4.3-127
Table 3.4.3.7-11 Top 30 Primary Membrane (P_m) Stresses for the 100-Ton Transfer Cask Horizontal Handling, Supported by Trunnions 3.4.3-128
Table 3.4.3.7-12 Top 30 Primary Membrane plus Bending ($P_m + P_b$) Stresses for the 100-Ton Transfer Cask Horizontal Handling, Supported by Trunnions, Shell Element Top Surface 3.4.3-129
Table 3.4.3.7-13 Top 30 Primary Membrane plus Bending ($P_m + P_b$) Stresses for the 100-Ton Transfer Cask Horizontal Handling, Supported by Trunnions, Shell Element Bottom Surface 3.4.3-130
Table 3.4.4.1-1 Standard Canister Secondary (Thermal) Stresses (ksi). 3.4.4-39
Table 3.4.4.1-2 Standard Canister Dead Weight Primary Membrane (P_m) Stresses (ksi), $P_{internal}$ = 0 psig 3.4.4-40
Table 3.4.4.1-3 Standard Canister Dead Weight Primary Membrane plus Bending ($P_m + P_b$) Stresses (ksi), $P_{internal}$ = 0 psig 3.4.4-41
Table 3.4.4.1-4 Standard Canister Normal Handling With No Internal Pressure Primary Membrane (P_m) Stresses, (ksi) 3.4.4-42
Table 3.4.4.1-5 Standard Canister Normal Handling With No Internal Pressure Primary Membrane plus Bending ($P_m + P_b$) Stresses (ksi) 3.4.4-43
Table 3.4.4.1-6 Summary of Standard Canister Normal Handling plus Normal Internal Pressure Primary Membrane (P_m) Stresses (ksi). 3.4.4-44

List of Tables (Continued)

Table 3.4.4.1-7 Summary of Standard Canister Normal Handling, Plus Normal Pressure Primary Membrane plus Bending ($P_m + P_b$) Stresses (ksi). 3.4.4-45
Table 3.4.4.1-8 Summary of Maximum Standard Canister Normal Handling, plus Normal Pressure, plus Secondary (P + Q) Stresses (ksi).....3.4.4-46
Table 3.4.4.1-9 Standard Canister Normal Internal Pressure Primary Membrane (P_m) Stresses (ksi) 3.4.4-47
Table 3.4.4.1-10 Standard Canister Normal Internal Pressure Primary Membrane plus Bending ($P_m + P_b$) Stresses (ksi).....3.4.4-48
Table 3.4.4.1-11 Listing of Sections for Stress Evaluation of the Standard PWR Support Disk.....3.4.4-49
Table 3.4.4.1-12 $P_m + P_b$ Stresses for the Standard PWR Support Disk - Normal Conditions (ksi).....3.4.4-52
Table 3.4.4.1-13 $P_m + P_b + Q$ Stresses for the Standard PWR Support Disk - Normal Conditions (ksi).....3.4.4-53
Table 3.4.4.1-14 Listing of Sections for Stress Evaluation of the Standard BWR Support Disk.....3.4.4-54
Table 3.4.4.1-15 $P_m + P_b$ Stresses for the Standard BWR Support Disk — Normal Conditions (ksi).....3.4.4-60
Table 3.4.4.1-16 $P_m + P_b + Q$ Stresses for the Standard BWR Support Disk - Normal Conditions (ksi).....3.4.4-61
Table 3.4.4.1-17 Summary of Maximum Stresses for the Standard PWR and BWR Fuel Basket Weldments - Normal Conditions (ksi) 3.4.4-62
Table 3.4.4.2-1 Summary of Maximum Stresses for the Standard Vertical Concrete Cask Load Combinations 3.4.4-75
Table 3.4.4.2-2 Maximum Concrete and Reinforcing Bar Stresses in the Standard Concrete Cask 3.4.4-76
Table 3.4.4.2-3 Standard Concrete Cask Average Concrete Axial Tensile Stresses.....3.4.4-77
Table 3.4.4.2-4 Standard Concrete Cask Average Concrete Hoop Tensile Stresses.....3.4.4-77
Table 3.4.4.3-1 Advanced Canister Secondary (Thermal) Stresses (ksi) 3.4.4-102
Table 3.4.4.3-2 Advanced Canister Primary Membrane Stress, Dead Weight with No Internal Pressure (ksi).....3.4.4-103

List of Tables (Continued)

Table 3.4.4.3-3 Advanced Canister Primary Membrane plus Bending Stresses, Dead Weight with No Internal Pressure (ksi) 3.4.4-104
Table 3.4.4.3-4 Advanced Canister Primary Membrane Stress, Normal Handling with No Internal Pressure (ksi) 3.4.4-105
Table 3.4.4.3-5 Advanced Canister Primary Membrane plus Bending Stress, Normal Handling with No Internal Pressure (ksi) 3.4.4-106
Table 3.4.4.3-6 Advanced Canister Primary Membrane Stress, Normal Handling with Normal Internal Pressure (40 psig) (ksi) 3.4.4-107
Table 3.4.4.3-7 Advanced Canister Primary Membrane Plus Bending Stress, Normal Handling with Normal Internal Pressure (40 psig) (ksi) 3.4.4-108
Table 3.4.4.3-8 Advanced Canister Primary Membrane Plus Secondary Stress, Normal Handling with Normal Internal Pressure (40 psig) (ksi) 3.4.4-109
Table 3.4.4.3-9 Advanced Canister Primary Membrane Stress, Normal Internal Pressure (40 psig) (ksi) 3.4.4-110
Table 3.4.4.3-10 Advanced Canister Primary Membrane Plus Bending Stress, Normal Internal Pressure (40 psig) (ksi) 3.4.4-111
Table 3.4.4.3-11 Stresses at the Center of the Advanced Canister Bottom Plate 3.4.4-111
Table 3.4.4.4-1 Summary of Maximum Stresses for Advanced Vertical Concrete Cask Load Combinations 3.4.4-123
Table 3.4.4.4-2 Maximum Concrete and Reinforcing Bar Stresses for the Advanced Concrete Cask 3.4.4-124
Table 3.4.4.4-3 Advanced Concrete Cask Average Concrete Axial Tensile Stresses ... 3.4.4-125
Table 3.4.4.4-4 Advanced Concrete Cask Average Concrete Hoop Tensile Stresses ... 3.4.4-125

THIS PAGE INTENTIONALLY LEFT BLANK

3.0 STRUCTURAL EVALUATION

This chapter describes the design and analysis of the principal structural components of the Universal Storage System for normal operating conditions. It demonstrates that the Universal Storage System meets the structural requirements for confinement of contents, criticality control, radiological shielding, and contents retrievability required by 10 CFR 72 [1] for the design basis normal operating conditions. Off-normal and accident conditions are evaluated in Chapter 11. The Universal Storage System is comprised of a transportable storage canister, a transfer cask, and a vertical concrete cask as shown in Figure 3.1-1. The canister is provided in two configurations. The Standard configuration holds up to 24 PWR or 56 BWR fuel assemblies in a tube and disk basket in the canister. The Advanced configuration holds up to 32 PWR fuel assemblies in a slot and tab basket in the canister. The canisters for both configurations are essentially identical, except that the bottom plate is 2 inches thick in the Advanced design and 1.75 inches thick in the Standard design. There are other minor differences that are not structurally important. The configurations have different weights, as shown in Section 3.2, which reflects the weight of contents, length of components and fuel and the differences in basket design between the configurations.

The transfer cask is provided in a Standard, Advanced or 100-ton configuration. The Standard transfer cask is used for vertical handling of the Standard canister. The Advanced transfer cask is used for vertical handling of the Standard or Advanced canister. The 100-ton transfer cask is used for the vertical and horizontal handling of the Standard or Advanced canister. The 100-ton transfer cask weighs less than the Standard and Advanced transfer casks and is designed to accommodate sites having a 100-ton cask handling crane weight limit. The Standard and Advanced transfer casks are identical, except that the Advanced transfer cask incorporates a support plate or gusset above each trunnion to increase its load carrying capacity for the higher weight of the Advanced canister. Canister handling, fuel loading and canister closing are operationally identical for any transfer cask configuration.

The vertical concrete cask is also provided in a Standard or an Advanced design. The Advanced design of the concrete cask differs from the Standard design in that it incorporates T-shaped channel weldments on the inside diameter of the concrete cask liner for canister support in a hypothetical tipover event and has an increased pedestal plate thickness and welded baffle pipes in the air inlets for enhanced shielding. The Standard concrete cask may only hold Standard canisters. Advanced or Standard canisters may be loaded in the Advanced concrete cask.

3.1 Structural Design

The Standard Universal Storage System includes five configurations to accommodate three classes of PWR and two classes of BWR fuel assemblies. The five classes of fuel assemblies are determined primarily by the overall lengths of the fuel assembly. The assignment of a fuel assembly to a class is shown in Tables 2.1.1.1-1 and 2.1.1.2-1 for PWR fuel and Table 2.1.2.1-1 for BWR fuel.

The three major components of the Universal Storage System are the vertical concrete cask, the transportable storage canister (canister), and the transfer cask (see Figure 3.1-1). These components are provided in different lengths corresponding to the classes of fuel.

The principal structural members of the vertical concrete cask are the reinforced concrete shell and the steel liner. The principal structural members of the canister are the structural lid, shell, bottom plate, the welds joining these components, and the fuel basket assembly. For the transfer cask, the trunnions, the inner and outer steel shells, the bottom shield doors, and the shield door support rails, are the principal structural components. These components are common to all Standard and Advanced configuration storage casks.

The evaluations presented in this chapter are based on the bounding or limiting configuration of the components for the condition being evaluated. In most cases, the bounding condition evaluates the heaviest configuration, with either a total weight or bounding weight used as specified in the analysis. Margins of safety greater than ten are generally stated in the analyses as "+ Large." Numerical values are shown for margins of safety that are less than ten.

3.1.1 Discussion

The transportable storage canister is designed to be transported in the Universal Transport Cask (Docket Number 71-9270 [2]). Consequently, the canister diameter is the same for both the Standard and the Advanced configurations. The outside diameter of the vertical concrete cask is established by the shielding requirement for the fuel used for the shielding evaluation. The shielding required for the fuel having the maximum shielding source term is conservatively applied to the concrete casks for both the Standard and Advanced designs.

Vertical Concrete Cask

The vertical concrete cask is a reinforced concrete cylinder with an outside diameter of 136 in. and an overall height (including the lid) ranging from 210.68 in. to 227.38 in., depending upon the configuration. The internal cavity of the concrete cask is lined by a 2.5-inch thick carbon steel shell having an inside diameter of 74.5 inches. These dimensions are the same for both the Standard and Advanced concrete casks. The support ring for the Standard concrete cask shield plug at the top of the steel shell has an inside diameter of 69.5 inches. In the Advanced concrete cask, this diameter is 70 inches. The steel shell thickness is primarily determined by radiation shielding requirements, but is also related to the need to establish a practical limit for the diameter of the concrete shell. For either configuration, the concrete shell is constructed using Type II Portland Cement and has a nominal density of 140 lb/ft^3 and a nominal compressive strength of 4000 psi. Inner and outer rebar assemblies are formed by vertical hook bars and horizontal hoop bars.

A ventilation air-flow path is formed by inlets at the bottom of the concrete cask, the annular space between the cask steel shell and the canister, and outlets near the top of the cask. The passive ventilation system operates by natural convection as cool air enters the bottom inlets, is heated by the canister, and rises and exits from the top outlets. In the Advanced concrete cask which has a higher heat load than the Standard configuration, T-shaped channel weldments are welded to the inside surface of the steel shell to support the canister in a hypothetical concrete cask tipover event. The Advanced concrete cask also includes baffle pipes welded in the air inlets for enhanced shielding to reduce the radiation dose at the inlet vents.

A 5.375-in. thick shield plug is installed in the concrete cask cavity above the canister. The shield plug for the Standard concrete cask may incorporate either 1 inch of NS-4-FR or 1.5 inches of NS-3 neutron shielding material enclosed in carbon steel. The Advanced concrete cask shield plug incorporates 1.5 inches of either NS-3 or NS-4-FR. The shield plug is supported by the support ring, welded to the inner shell. A 1.5-in. thick carbon steel lid provides a cover to protect the canister from adverse environmental conditions and postulated tornado driven missiles. The shield plug and lid provide shielding to reduce the skyshine radiation. When the lid is bolted in place, the shield plug is secured between the lid and the shield plug support ring.

Transportable Storage Canister

The transportable storage canisters are designed for the storage of identified classes of PWR and BWR spent fuel. The analysis in this report is based on the identification of bounding

conditions, and the application of those conditions to determine the maximum stresses that exist in the worst case.

The canister is designed to be transported in the Universal Transport Cask. Transport conditions establish the design basis loading, except for lifting, because the hypothetical accident transport conditions produce higher stresses in the canister and basket than do the design basis storage conditions. Consequently, the canister and basket design is conservative with respect to storage conditions. The evaluation of the canister and basket assembly for transport conditions is documented in the Safety Analysis Report for the Universal Transport Cask [2].

The canister forms the confinement boundary for the basket assembly that contains the PWR or BWR spent fuel. The Standard canister is designed in five lengths to accommodate the classes of spent fuel presented in Tables 2.1.1.1-1 and 2.1.2.1-1. The Advanced canister is designed in three lengths to accommodate PWR fuel. The transportable storage canister consists of a cylindrical shell assembly closed at its top end by an inner shield lid and an outer structural lid. The bottom end is closed by a 1.75-inch thick plate, or a 2-inch thick plate, for the Standard or Advanced canisters, respectively. The bottom plate of the canister is SA-240, Type 304L stainless steel that is welded to the canister shell. The canister is fabricated from Type 304L stainless steel. The canister shield lid is 7-in. thick, SA-240 Type 304 stainless steel, and the structural lid is 3.0-in. thick SA-240, Type 304L stainless steel. Both lids are welded to the canister shell to close the canister. The shield lid is supported by a support ring. The structural lid is supported, prior to welding, by the shield lid. A groove is machined into the structural lid circumference to accept a spacer ring. The spacer ring facilitates welding of the structural lid to the canister shell. SA-182 Type 304 stainless steel may be substituted for the SA-240 Type 304 stainless steel used in the shield lid provided that the SA-182 material has equal or higher yield and ultimate strengths than those of the SA-240 material. Similarly, SA-182 Type 304L stainless steel may be substituted for the SA-240 Type 304L stainless steel used in the structural lid provided that the SA-182 material has equal or higher yield and ultimate strengths are equal to or greater than those of the SA-240 material. The canister is also described in Section 1.2.1.1.

The Standard fuel basket assembly is provided in two configurations — one for up to 24 PWR fuel assemblies and one for up to 56 BWR fuel assemblies. The Standard PWR basket is comprised of Type 17-4 PH stainless steel support disks, Type 6061-T651 aluminum alloy heat transfer disks, and Type 304 stainless steel fuel tubes equipped with aluminum-boron carbide (BORAL) neutron absorber and stainless steel cover. The remaining structural components are

Type 304 stainless steel. The Standard BWR basket is comprised of SA-533 carbon steel support disks coated with electroless nickel, Type 6061-T651 aluminum alloy heat transfer disks, and fuel tubes constructed of the same materials as the PWR tubes. The remaining structural components are Type 304 stainless steel. The basket assemblies are more fully described in Section 1.2.1.2.

Standard Fuel Basket

The Standard fuel basket support disks, heat transfer disks, and fuel tubes, together with the top and bottom weldments, are positioned by tie rods (with spacers and washers) that extend the length of the basket and hold the assembly together. The support disks provide structural support for the fuel tubes. They also help to remove heat from the fuel tubes. The heat transfer disks provide the primary heat removal capability and are not considered to be structural components. The heat transfer disks are sized so that differential thermal expansion does not result in disk contact with the canister shell. The number of heat transfer disks and support disks varies depending upon the length of the fuel to be confined in the basket. The fuel tubes house the spent fuel assemblies. The top and bottom weldments provide longitudinal support for the fuel tubes. The fuel tubes are fabricated from Type 304 stainless steel. No structural credit is taken for the presence of the fuel tubes in the basket assembly analysis. The walls of each PWR fuel tube support a sheet of BORAL neutron poison material that is covered by stainless steel. No structural credit is taken in the basket assembly analysis for the BORAL sheet or its stainless steel cover. The PWR assembly fuel tubes have a nominal inside dimension of 8.8 in. square and a composite wall thickness of 0.14 inch. The BWR assembly fuel tubes have a nominal inside dimension of 5.9 in^2 and a composite wall thickness of 0.20 inch. Depending upon its location in the basket assembly, an individual BWR fuel tube may support BORAL neutron poison material on one or two sides. Certain fuel tubes located on the outer edge of the basket do not have neutron poison material. The fuel tubes have been evaluated to ensure that the BORAL neutron poison material remains in place under normal conditions and design basis off-normal and accident events.

Four over-sized fuel storage positions are located on the periphery of the Standard BWR basket to provide additional space for BWR fuel assemblies with channels that have been reused, since reused channels are expected to have increased bowing or bulging. Normal BWR fuel assemblies may also be stored in these locations.

Advanced Fuel Basket

The Advanced fuel basket is constructed of carbon steel plates that are coated with electroless nickel. The fuel basket design is a right-circular cylinder configuration with tab and slot plates forming the fuel cells to store up to 32 PWR fuel assemblies. The basket is composed of three primary regions: the top assembly, the basket body, and the bottom assembly. The primary purpose of the top and bottom assemblies is to maintain the geometric configuration of the basket. The basket body consists of the side weldments, the corner assemblies and the basket plates.

The exterior wall of the basket is 0.438-inch thick and made from SA-537 Class 2 carbon steel plates. The plates are continuous along the axial length of the basket and form a basket outer diameter of 65.5 inches. The basket exterior walls along with the ligament plates of the top and bottom assemblies provide the primary structure to maintain a right circular cylinder.

The interior plates of the basket body form the 32 fuel loading positions in the basket. Each position has an inner dimension of 8.80 inches. The plates are 0.312-inch thick and are also made from SA-537 Class 2 carbon steel. The plates are fitted together by a tab and slot configuration, which maintains the geometry of the fuel cells.

Each of the 32 loading positions are lined with METAMIC neutron absorber plates. The thickness of the METAMIC plates is 0.050 inches. The neutron absorber plates are held in place using tabs and slots similar to the primary basket structure.

To facilitate heat transfer in the basket, two additional components are used. The first is cooling inserts located in the twenty outer slots of the basket. There is no fuel stored in these slots. The cooling inserts are 0.25-inch thick 1100-H14 aluminum and are designed to aid in the conduction of heat to the outer surface of the basket and do not have a structural function. The second component is the cooling shunts between the basket exterior wall and the canister shell. The 24 cooling shunts are made from 0.063-inch thick 6061-T6 aluminum sheet. The shunts maintain contact between the basket and canister during all conditions of transport and storage and thus aid in the conduction heat transfer from the basket to the canister shell.

Transfer Cask

The transfer cask, with its lifting yoke, is primarily a lifting device used to move the canister. It provides biological shielding when it contains a loaded canister. The transfer cask is provided in three configurations: Standard, Advanced, and 100-ton. The Standard and Advanced transfer casks are of the same design, except that the Advanced transfer cask incorporates a support plate at the trunnions allowing the lifting of Standard or Advanced canisters weighing up to 103,000 pounds. The Standard transfer cask (without the support plate) is limited to lifting standard canisters weighing up to 88,000 pounds. The Standard and Advanced transfer casks are used for the vertical transfer of a canister between work stations and the concrete cask, or transport cask. The 100-ton transfer cask may be used to transport Standard or an Advanced canister in the vertical orientation or the horizontal orientation to accommodate sites with limited crane capacity or low overhead clearance between work stations. Transfer casks of different lengths are designed to handle five canisters of different lengths containing one of three classes of PWR or one of two classes of BWR fuel assemblies. In addition, an extension may be added to a transfer cask to allow it to handle canisters of the next longer length, provided that weight limits are met. The transfer cask is a heavy lifting device. Accordingly, it is designed, fabricated, and load-tested to the requirements of NUREG-0612 [8] and ANSI N14.6 [9].

The Standard and Advanced transfer casks incorporate a multiwall (steel/lead//NS-4-FR/steel) design, which limits the contact radiation dose rate. The 100-ton transfer cask uses a liquid neutron shield in a tank surrounding the transfer cask steel/lead/steel shells. All of the transfer cask designs incorporate a top retaining ring, which is bolted in place to prevent a loaded canister from being inadvertently lifted through the top of the transfer cask. All transfer casks have retractable bottom shield doors. During loading operations, the doors are closed and may be secured by lock bolts or lock pins so they cannot inadvertently open. During unloading, the doors are retracted using hydraulic cylinders to allow the canister to be lowered into the storage or transport cask. The 100-ton transfer cask is rotated between vertical and horizontal using a tilting fixture built into the wheeled transfer cradle. There are no rotation features in the transfer cask body. The principal design parameters of the transfer casks are shown in Table 1.2-7.

Component Evaluation

The following components are evaluated in this chapter:

- canister lifting devices,
- canister shell, bottom, and structural lid,

- canister shield lid support ring,
- fuel basket assembly,
- transfer cask trunnions, shells, retaining ring, bottom doors, and support rails,
- vertical concrete cask body, and
- concrete cask steel components (reinforcement, inner shell, lid, bottom plate, bottom, etc.).

Other Universal Storage System components shown on the license drawings in Section 1.8 are included as loads in the evaluation of the components previously listed, as appropriate.

The structural evaluations in this chapter demonstrate that the Universal Storage System components meet their structural design criteria and are capable of safely handling and storing PWR or BWR spent fuel.

3.1.2 Design Criteria

The Universal Storage System structural design criteria are described in Section 2.2. Load combinations for normal, off-normal, and accident loads are evaluated in accordance with ANSI 57.9 [3] and ACI-349 [4] for the concrete cask (see Table 2.2-1), and in accordance with the 1995 edition of the ASME Code, Section III, Division I, Subsection NB [5] for Class 1 components of the canister (see Table 2.2-2). The baskets are evaluated in accordance with ASME Code, Section III, Subsection NG [6], and NUREG-6322 [7]. The transfer casks and the lifting yokes are lifting devices that are designed to NUREG-0612 [8] and ANSI N14.6 [9].

Figure 3.1-1 Principal Components of the Universal Storage System

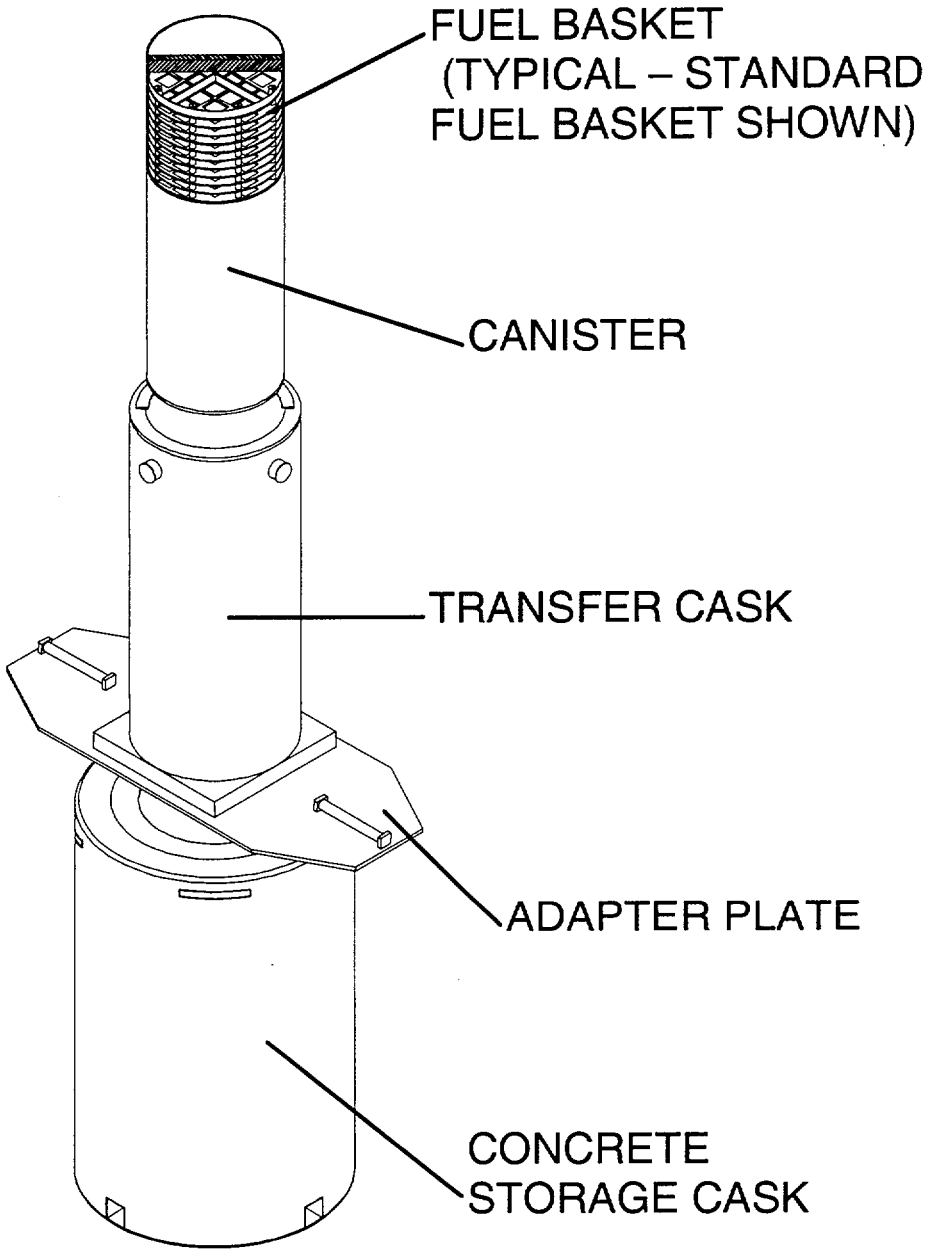

THIS PAGE INTENTIONALLY LEFT BLANK

3.2 Weights and Centers of Gravity

The weights and centers of gravity (CGs) for the Universal Storage System Standard PWR and BWR configurations are shown in Tables 3.2-1 and 3.2-2, respectively. The weights and CGs for the Universal Storage System Advanced PWR configuration are shown in Table 3.2-3. The weights for the Standard, Advanced and 100-ton transfer cask configurations are shown in Tables 3.2-4 through 3.2-8. The weights and CGs are calculated based on nominal design dimensions.

Table 3.2-1 Standard Universal Storage System Weights and CGs – PWR Configuration

Description	Class 1		Class 2		Class 3	
	Calculated Weight[1] (lb)	Center of Gravity[1]	Calculated Weight[1] (lb)	Center of Gravity[1]	Calculated Weight[1] (lb)	Center of Gravity[1]
Fuel Contents (Including inserts)	37,608	—	38,448	—	35,520	—
Poison Rods (Inserts)	1,320	—	1,368	—	--	—
Concrete Cask Lid	2,449	—	2,449	—	2,449	—
Concrete Cask Shield Plug	4,845	—	4,845	—	4,845	—
Canister Structural Lid	2,927	—	2,927	—	2,927	—
Canister Shield Lid	6,825	—	6,825	—	6,825	—
Transfer Adapter Plate	11,912	—	11,912	—	11,912	—
Transfer Cask Lifting Yoke	5,816	—	5,816	—	5,816	—
Water in Canister	12,893	—	14,668	—	15,637	—
Canister (with basket; without fuel or lids)	23,345	—	24,727	—	25,511	—
Canister (with fuel, and shield and structural lids)	70,705	—	72,927	—	70,783	—
Concrete Cask (empty, with shield plug and lid)	221,696	—	230,390	—	237,649	—
Concrete Cask (with loaded Canister and lids)[2]	292,401	107.4	303,317	111.7	308,432	115.7
Transfer Cask (empty)	110,821	—	115,800	—	120,010	—
Transfer Cask and Canister, basket (empty, without lids)[3]	134,166	87.4	140,527	90.4	145,521	94.5
Transfer Cask and Canister (with fuel, water and shield lid)[3]	191,492	91.6	200,468	92.2	203,503	96.2
Transfer Cask and Canister (with fuel, dry with lids)[3]	181,526	93.0	188,727	93.9	190,793	98.0

1 Weights and CGs are calculated from nominal design dimensions.

2 Center of gravity is measured from the bottom of the concrete cask.

3 Center of gravity is measured from the bottom of the canister.

Table 3.2-2 Standard Universal Storage System Weights and CGs – BWR Configuration

Item Description	Class 4		Class 5	
	Calculated Weight[1] (lb)	Center of Gravity[1]	Calculated Weight[1] (lb)	Center of Gravity[1]
Fuel Contents (Including channels)	38,976	—	38,976	—
Concrete Cask Lid	2,449	—	2,449	—
Concrete Cask Shield Plug	4,845	—	4,845	—
Canister Structural Lid	2,927	—	2,927	—
Canister Shield Lid	6,825	—	6,825	—
Transfer Adapter Plate	11,912	—	11,912	—
Transfer Cask Lifting Yoke	5,816	—	5,816	—
Water in Canister	15,038	—	15,407	—
Canister (with basket, without fuel or lids)	26,631	—	27,168	—
Canister (with fuel, and shield and structural lids)	75,359	—	75,896	—
Concrete Cask (empty, with shield plug and lid)	231,728	—	236,314	—
Concrete Cask (with loaded Canister and lids)[2]	307,087	112.3	312,210	114.9
Transfer Cask (empty)	116,603	—	119,240	—
Transfer Cask and Canister (empty, without lids)[3]	143,234	91.0	146,408	93.5
Transfer Cask and Canister (with fuel, water and shield lid)[3]	204,073	92.6	207,616	95.3
Transfer Cask and Canister (with fuel, dry with lids)[3]	191,962	94.3	195,136	97.1

1 Weights and CGs are calculated from nominal design dimensions.

2 Center of gravity is measured from the bottom of the concrete cask.

3 Center of gravity is measured from the bottom of the canister.

Table 3.2-3 Advanced Universal Storage System Weights and CGs – PWR Configuration

Item Description	Class 1		Class 2		Class 3	
	Calculated Weight[1] (lb)	Center of Gravity[1] (in.)	Calculated Weight[1] (lb)	Center of Gravity[1] (in.)	Calculated Weight[1] (lb)	Center of Gravity[1] (in.)
Fuel Contents	50,200		51,300		47,400	
Concrete Cask Lid	2,500		2,500		2,500	
Concrete Cask Shield Plug	4,900		4,900		4,900	
Canister (empty, w/o lids)	8,700		9,000		9,300	
Canister Structural Lid	2,900		2,900		2,900	
Canister Shield Lid	6,900		6,900		6,900	
Transfer Adapter Plate	11,200		11,200		11,200	
Transfer Cask Lifting yoke	5,900		5,900		5,900	
Water in canister[2]	12,600		13,300		14,400	
Basket	16,100		17,000		17,900	
Canister (with basket, without fuel or lids)	24,900		26,100		27,300	
Canister (with fuel, shield lid, and structural lid)	84,800	89.1[3]	87,200	92.5[3]	84,400	97.1[3]
Concrete cask (empty, w/shield plug and lid)	227,200	106.2[4]	236,000	110.7[4]	243,600	114.5[4]
Concrete cask (with loaded canister, lids, shield plug, and concrete-cask lid)	311,900	108.1[4]	323,100	112.3[4]	327,900	116.2[4]
Transfer cask (empty)[5]	112,300	88.2[6]	117,300	92.7[6]	121,500	96.5[6]
Transfer cask and canister w/basket (empty, without lids)	137,100		143,400		148,700	
Transfer cask and canister (with fuel, water and shield lid)	206,600		214,800		217,300	
Transfer cask and canister (with fuel, dry with lids)	197,000		204,400		205,800	

1. Weights and CGs are calculated from nominal design dimensions with weights rounded to next higher 100 lbs.
2. Includes water above shield lid.
3. Center of gravity is measured from the bottom of the canister.
4. Center of gravity is measured from the bottom of the concrete cask.
5. Advanced Transfer Cask.
6. Center of gravity is measured from the bottom of the Advanced Transfer Cask.

Table 3.2-4 Under-Hook Weights for the Standard Transfer Cask with Standard Canister

Configuration	PWR Class 1	PWR Class 2	PWR Class 3	BWR Class 4	BWR Class 5
Standard transfer cask (empty)	110,821	115,800	120,010	116,603	119,240
Transfer cask, empty canister/basket, and yoke	139,982	146,343	151,337	149,050	152,224
Transfer cask; wet, loaded canister (fuel, water, and shield lid); and yoke	197,308	206,284	209,319	209,889	213,432
Transfer cask; dry, loaded canister; and yoke	187,342	194,543	196,609	197,778	200,952

Table 3.2-5 Under-Hook Weights for the Advanced Transfer Cask with Standard Canister

Configuration	PWR Class 1	PWR Class 2	PWR Class 3	BWR Class 4	BWR Class 5
Advanced transfer cask (empty)	112,300	117,300	121,500	118,000	120,700
Transfer cask, empty canister/basket, and yoke	141,600	148,000	153,000	150,600	153,800
Transfer cask; wet, loaded canister (fuel, water, and shield lid); and yoke	198,900	207,900	210,900	211,400	215,000
Transfer cask; dry, loaded canister; and yoke	189,000	196,200	198,200	199,300	202,500

Table 3.2-6 Under-Hook Weights for the Advanced Transfer Cask with Advanced Canister

Configuration	PWR Class 1	PWR Class 2	PWR Class 3
Advanced transfer cask (empty)	112,300	117,300	121,500
Transfer cask, empty canister, and yoke	143,000	149,200	154,600
Transfer cask; wet, loaded canister (fuel, water, and shield lid); and yoke	212,500	220,600	223,200
Transfer cask; dry, loaded canister; and yoke	202,900	210,300	211,700

Table 3.2-7 Under-Hook Weights for the 100-Ton Transfer Cask with Standard Canister

Configuration	**PWR Class 1**	**PWR Class 2**	**PWR Class 3**	**BWR Class 4**	**BWR Class 5**
100-ton Transfer Cask, empty	91,600	95,500	98,800	96,200	98,200
100-ton Transfer Cask, empty canister/basket and yoke	120,700	126,100	130,100	127,900	130,600
100-ton Transfer cask; wet, loaded canister (fuel, water, and shield lid); and yoke	179,100	186,100	188,300	189,100	191,900
100-ton Transfer cask; dry, loaded canister; and yoke	168,100	174,300	175,400	177,000	179,700

Table 3.2-8 Under-Hook Weights for the 100-Ton Transfer Cask with Advanced Canister

Configuration	**PWR Class 1**	**PWR Class 2**	**PWR Class 3**
100-ton Transfer Cask, empty	91,600	95,500	98,800
Transfer Cask, empty canister, and yoke	122,300	127,500	132,000
Transfer cask; wet, loaded canister (fuel, water, and shield lid); and yoke	188,200	195,100	196,500
Transfer cask; dry, loaded canister; and yoke	182,200	188,500	189,100

3.3 Mechanical Properties of Materials

The mechanical properties of steels used in the fabrication of the Universal Storage System components are presented in Tables 3.3-1 through 3.3-10. The primary steels, Type 304 and Type 304L stainless steel, and ASTM SA537 and A36 carbon steel, were selected because of their high strength, ductility, resistance to brittle fracture, and metallurgical stability for long-term storage. Carbon steel used in the Standard BWR and Advanced PWR baskets is coated with electroless nickel to ensure its resistance to corrosion due to exposure to pool water. Carbon steel used in the concrete cask is coated to ensure its resistance to corrosion during storage.

3.3.1 Primary Component Materials

The steels and aluminum alloy used in the fabrication of the canister and basket are:

Canister shell	ASME SA-240, Type 304L stainless steel
Canister bottom plate	ASME SA-240, Type 304L stainless steel
Canister shield lid	ASME SA-240, Type 304 stainless steel
Canister structural lid	ASME SA-240, Type 304L stainless steel
Standard Basket	
Support disks	
PWR basket	ASME SA-693, Type 630, 17-4 PH stainless steel
BWR basket	ASME SA-533, Type B class 2 carbon steel
Heat transfer disks	ASME SB-209, Type 6061-T651 aluminum alloy
Spacer disks	ASME SA-479, Type 304 stainless steel
Tie rods/nuts	ASME SA-479, Type 304 stainless steel
Basket end weldments	ASME SA-240, Type 304 stainless steel
Fuel tubes	ASTM A240, Type 304 stainless steel
BORAL	Proprietary Material
Advanced Basket	
Plates	ASTM SA537 class 2 carbon steel
Cooling Inserts	ASTM B209, Type 1100-H14 aluminum alloy
Cooling Shunts	ASME SB-209, Type 6061-T651 aluminum alloy
METAMIC	Proprietary Material

The cooling inserts used in the Advanced basket are not a structural component. Thermal properties are presented in Section 4.2. SA-182 Type 304 stainless steel may be substituted for SA-240 Type 304 stainless steel for the shield lid provided that the SA-182 material has yield and ultimate strengths greater than or equal to those of the SA-240 material. SA-182 Type 304L

stainless steel may be substituted for SA-240 Type 304L stainless steel for the structural lid provided that the SA-182 material has yield and ultimate strengths greater than or equal to those of the SA-240 material.

Steels used in the fabrication of the vertical concrete cask are:

Standard and Advanced Concrete Casks	
Inner shell	ASTM A36 carbon steel
Pedestal and base	ASTM A36 carbon steel
Reinforcing bar (Standard)	ASTM A615, Grade 60 and Grade 75 carbon steel, and A705
Reinforcing bar (Advanced)	ASTM A615, Grade 75
Advanced Concrete Cask	
T-Shaped channel weldment	ASTM A36 carbon steel

The steels used in the fabrication of the transfer casks are:

Inner shell	ASTM A588 low alloy steel
Outer shell	ASTM A588 low alloy steel
Bottom plate	ASTM A588 low alloy steel
Top plate	ASTM A588 low alloy steel
Retaining ring	ASTM A588 low alloy steel
Trunnions	ASTM A350, LF2 low alloy steel
Shield doors and rails	ASTM A350, LF2 low alloy steel
Retaining ring bolts	ASTM A193, Grade B6 high alloy steel

In addition to these materials, ASTM A240 Type 304 stainless steel is used in the 100-ton transfer cask.

The mechanical properties of the 6061-T651 aluminum heat transfer disks in the fuel basket are shown in Table 3.3-11. The mechanical properties of the concrete are listed in Table 3.3-12. Mechanical properties for ASTM SA537 Class 2 carbon steel and METAMIC are shown in Tables 3.3-14 and 3.3-15, respectively.

Table 3.3-1 Mechanical Properties of SA-240 and A-240 Type 304 Stainless Steel

Property*	**Value**							
Temperature (°F)	-40	-20	70	200	300	400	500	750
Ultimate strength,[10] S_u (ksi)	75.0	75.0	75.0	71.0	66.0	64.4	63.5	63.1
Yield strength,[10] S_y (ksi)	30.0	30.0	30.0	25.0	22.5	20.7	19.4	17.3
Design Stress Intensity,[10] S_m (ksi)	20.0	20.0	20.0	20.0	20.0	18.7	17.5	15.6
Modulus of Elasticity,[10] E ($\times 10^3$ ksi)	28.7	28.7	28.3	27.6	27.0	26.5	25.8	24.4
Alternating Stress [11] @ 10 cycles (ksi)	718.0	718.0	708.0	690.5	675.5	663.0	645.5	610.4
Alternating Stress [11] @ 10^6 cycles (ksi)	28.7	28.7	28.3	27.6	27.0	26.5	25.8	24.4
Coefficient of Thermal Expansion,[10] α ($\times 10^{-6}$ in/in/°F)	8.13	8.19	8.46	8.79	9.00	9.19	9.37	9.76
Poisson's Ratio[10]	0.31							
Density[10]	503 lbm/ft^3 (0.291 lbm/in^3)							

* SA-182, Type 304 stainless steel may be substituted for SA-240 Type 304 stainless steel provided that the SA-182 material yield and ultimate strengths are equal to or greater than those of the SA-240 material. The SA-182 forging material and the SA-240 plate material are both Type 304 austenitic stainless steels. Austenitic stainless steels do not experience a ductile-to-brittle transition for the range of temperatures considered in this Safety Analysis Report. Therefore, fracture toughness is not a concern.

10 ASME Code, Section II, Part D.

11 ASME Code, Section III, Appendix I.

Table 3.3-2 Mechanical Properties of SA-479, Type 304 Stainless Steel

Property	Value							
Temperature (°F)	-40	-20	+70	+200	+300	+400	+500	+750
Ultimate strength, S_u, (ksi) *	—	75.0	75.0	71.0	66.0	64.4	63.5	63.1
Yield strength, S_y, (ksi) *	—	30.0	30.0	25.0	22.5	20.7	19.4	17.3
Design Stress Intensity,[10] S_m,(ksi)	20.0	20.0	20.0	20.0	20.0	18.7	17.5	15.6
Modulus of Elasticity[10] ($\times 10^3$ ksi)	28.8	28.7	28.3	27.6	27.0	26.5	25.8	24.4
Alternating Stress[11] @ 10 cycles (ksi)	720	718	708	683	675	663	645	610
Alternating Stress[11] @ 10^6 cycles (ksi)	28.8	28.7	28.3	27.6	27.0	26.5	25.8	24.4
Coefficient of Thermal Expansion,[10] α ($\times 10^{-6}$ in/in/°F)	—		8.46	8.79	9.00	9.19	9.37	9.76
Poisson's Ratio[10]	0.31							
Density[10]	503 lbm/ft^3 (0.291 lbm/in^3)							

[10] ASME Code, Section II, Part D.

[11] ASME Code, Section III, Appendix I.

* Calculated based on Design Stress Intensity:

$$\left(\frac{S_{m-temp}}{S_{m\,70^\circ}}\right) S_{u70} = S_{u-temp}$$

Table 3.3-3 Mechanical Properties of SA-240, Type 304L Stainless Steel

Property*	**Value**							
Temperature (°F)	-40	-20	70	200	300	400	500	750
Ultimate strength,[10] S_u, (ksi)	70.0	70.0	70.0	66.2	60.9	58.5	57.8	55.9
Yield strength,[10] S_y, (ksi)	25.0	25.0	25.0	21.4	19.2	17.5	16.4	14.7
Design Stress Intensity,[10] S_m,(ksi)	16.7	16.7	16.7	16.7	16.7	15.8	14.8	13.3
Modulus of Elasticity[10] ($\times 10^3$ ksi)	28.7	28.7	28.3	27.6	27.0	26.5	25.8	24.4
Alternating Stress[11] @ 10 cycles (ksi)	718.0	718.0	708.0	690.5	675.5	663.0	645.5	610.4
Alternating Stress[11] @ 10^6 cycles (ksi)	28.7	28.7	28.3	27.6	27.0	26.5	25.8	24.4
Coefficient of Thermal Expansion,[10] α ($\times 10^{-6}$ in/in/°F)	8.13	8.19	8.46	8.79	9.00	9.19	9.37	9.76
Poisson's Ratio[10]	0.31							
Density[10]	503 lbm/ft^3(0.291 lbm/in^3)							

* SA-182, Type 304 stainless steel may be substituted for SA-240 Type 304 stainless steel provided that the SA-182 material yield and ultimate strengths are equal to or greater than those of the SA-240 material. The SA-182 forging material and the SA-240 plate material are both Type 304 austenitic stainless steels. Austenitic stainless steels do not experience a ductile-to-brittle transition for the range of temperatures considered in this Safety Analysis Report. Therefore, fracture toughness is not a concern.

10 ASME Code, Section II, Part D.

11 ASME Code, Section III, Appendix I.

Table 3.3-4 Mechanical Properties of SA-564 and SA-693, Type 630, 17-4 PH Stainless Steel

Property	**Value**								
Temperature (°F)	-40	-20	70	200	300	400	500	650	800
Ultimate strength,[10] S_u, (ksi)	135.0	135.0	135.0	135.0	135.0	131.4	128.5	125.7	105.3[15]
Yield strength,[10] S_y, (ksi)	105.0	105.0	105.0	97.1	93.0	89.8	87.0	83.6	77.7[15]
Design Stress Intensity,[10] S_m,(ksi)	45.0	45.0	45.0	45.0	45.0	43.8	42.8	41.9	35.1
Modulus of Elasticity[10] ($\times 10^3$ ksi)	28.7	28.7	28.3	27.6	27.0	26.5	25.8	25.1	24.1
Alternating Stress[11] @ 10 cycles (ksi)	401.8	401.8	396.2	386.4	378.0	371.0	361.2	341.6	--
Alternating Stress[11] @ 10^6 cycles (ksi)	19.1	19.1	18.9	18.4	18.0	17.7	17.2	16.3	--
Coefficient of Thermal Expansion,[10] α ($\times 10^{-6}$ in/in/°F)	—		5.89	5.90	5.90	5.91	5.91	5.93	5.96
Poisson's Ratio[10]	0.31								
Density[10]	503 lbm/ft^3 (0.291 lbm/in^3)								

[10] ASME Code, Section II, Part D.

[11] ASME Code, Section III, Appendix I.

[15] MIL-HDBK-5G.

Table 3.3-5 Mechanical Properties of A-36 Carbon Steel

Property	**Value**							
Temperature (°F)	100	200	300	400	500	600	650	700
Ultimate strength, S_u, (ksi)[13]	58.0	58.0	58.0	58.0	—	—	—	—
Yield strength,[10] S_y, (ksi)	36.0	32.8	31.9	30.8	29.1	26.6	26.1	25.9
Design Stress Intensity,[10] S_m,(ksi)	19.3	19.3	19.3	19.3	19.3	17.7	17.4	17.3
Modulus of Elasticity, E ($\times 10^3$ ksi)[10]	29.0	28.8	28.3	27.7	27.3	26.7	26.1	25.5
Coefficient of Thermal Expansion, α ($\times 10^{-6}$ in/in/°F)[10]	5.53	5.89	6.26	6.61	6.91	7.17	7.30	7.41
Poisson's Ratio[10]	0.31							
Density[12]	0.284 lbm/in^3							

[10] ASME Code, Section II, Part D.

[12] Metallic Materials Specification Handbook.

[13] ASME Code Case, Nuclear Components, N-71-17.

Table 3.3-6 Mechanical Properties of A-615, Grade 60 and Grade 75 Reinforcing Steel

Property	**Grade 60 Value**	**Grade 75 Value**
Ultimate Strength [14] (ksi)	90.0	100.0
Yield Strength [14] (ksi)	60.0	75.0
Coefficient of Thermal Expansion, [12] α (in/in/°F)	6.1×10^{-6}	6.1×10^{-6}
Density [12]	0.284 lbm/in^3	0.284 lbm/in^3

[12] Metallic Materials Specification Handbook.

[14] Annual Book of ASTM Standards.

Table 3.3-7 Mechanical Properties of SA-533, Type B, Class 2 Carbon Steel

Property	Value						
Temperature (°F)	-20	70	200	300	400	500	750
Ultimate strength [10] S_u, (ksi)	90.0	90.0	90.0	90.0	90.0	90.0	87.2
Yield strength, [10] S_y, (ksi)	70.0	70.0	65.5	64.5	63.2	62.3	59.3
Design Stress Intensity, [10] S_m,(ksi)	30.0	30.0	30.0	30.0	30.0	30.0	—
Modulus of Elasticity [10] E, ($\times 10^3$ ksi)	29.9	29.2	28.5	28.0	27.4	27.0	24.6
Alternating Stress [11] @ 10 cycles (ksi)	465.0	465.0	453.8	435.0	436.3	429.9	391.7
Alternating Stress [11] @ 10^6 cycles (ksi)	15.8	15.8	15.4	15.2	14.8	14.6	13.3
Coefficient of Thermal Expansion, [10] α ($\times 10^{-6}$ in/in/°F)	—	7.02	7.25	7.43	7.58	7.70	8.00
Poisson's Ratio [10]	0.31						
Density [10]	503 lbm/ft^3(0.291 lbm/in^3)						

[10] ASME Code, Section II, Part D.

[11] ASME Code, Section III, Appendix I.

Table 3.3-8 Mechanical Properties of A-588, Type A or B Low Alloy Steel

Property	**Value**							
Temperature (°F)	100	200	300	400	500	600	650	700
Ultimate strength, [13] S_u, (ksi)	70.0	70.0	70.0	70.0	70.0	70.0	70.0	70.0
Yield strength, [13] S_y, (ksi)	50.0	47.5	45.6	43.0	41.8	39.9	38.9	37.9
Design Stress Intensity, [13] S_m, (ksi)	23.3	23.3	23.3	23.3	23.3	23.3	23.3	23.3
Modulus of Elasticity [10] E, ($\times 10^3$ ksi)	29.0	28.8	28.3	27.7	27.3	26.7	26.1	25.5
Coefficient of Thermal Expansion, [10] α ($\times 10^{-6}$ in/in/°F)	5.53	5.89	6.26	6.61	6.91	7.17	7.30	7.41
Poisson's Ratio [10]	0.31							
Density [12]	0.284 lbm/in^3							

[10] ASME Code, Section II, Part D.

[12] Metallic Materials Specification Handbook.

[13] ASME Code Cases, Nuclear Components, NC-71-17, Tables 1, 2, 3, 4, and 5 for material thickness ≤ 4 in.

Table 3.3-9 Mechanical Properties of SA-350/A-350, Grade LF 2, Class 1 Low Alloy Steel

Property	**Value**					
Temperature (°F)	70	200	300	400	500	700
Ultimate strength,[10] S_u, (ksi)	70.0	70.0	70.0	70.0	70.0	70.0
Yield strength,[10] S_y (ksi)	36.0	32.8	31.9	30.8	29.1	25.9
Design Stress Intensity,[10] S_m (ksi)	23.3	21.9	21.3	20.6	19.4	17.3
Modulus of Elasticity,[10] E, ($\times 10^3$ ksi)	29.2	28.5	28.0	27.4	27.0	25.3
Coefficient of Thermal Expansion[10] α ($\times 10^{-6}$ in/in/°F)	—	5.89	6.26	6.61	6.91	7.41
Alternating Stress[11] at 10^6 cycles (ksi)	12.5	12.2	11.9	11.7	11.5	10.8
Alternating Stress[11] at 10 cycles (ksi)	580.0	566.0	556.1	544.2	536.3	502.5
Poisson's Ratio[10]	0.31					
Density[10]	0.279 lbm/in^3					

[10] ASME Code, Section II, Part D.

[11] ASME Code, Section III, Appendix I.

Table 3.3-10 Mechanical Properties of SA-193, Grade B6, High Alloy Steel Bolting Material

Property	Value							
Temperature (°F)	-40	-20	70	200	300	400	500	600
Ultimate Stress, S_u (ksi) * [10]	No Value Given	110.0	110.0	104.9	101.5	98.3	95.6	92.9
Yield Stress, S_y (ksi) * [10]	No Value Given	85.0	85.0	81.1	78.1	76.0	73.9	71.8
Design Stress Intensity, S_m (ksi) [10]	28.3	28.3	28.3	27.0	26.1	25.3	24.6	23.9
Modulus of Elasticity, E (ksi) [10]	30.1E+ 03	30.1E+ 03	29.2E+ 03	28.5E+ 03	27.9E+ 03	27.3E+ 03	26.7E+ 03	26.1E+03
Alternating Stress @ 10 cycles (ksi) [11]	1104.4	1100.0	1085.0	1058.0	1035.0	1015.0	989.0	935.3
Alternating Stress @ 10^6 cycles (ksi) [11]	13.0	12.9	12.7	12.4	12.2	11.9	11.6	11.0
Coefficient of Thermal Expansion, α (in/in/°F) [10]	5.73E-06	5.76E-06	5.92E-06	6.15E-06	6.30E-06	6.40E-06	6.48E-06	6.53E-06
Poisson's Ratio [10]	← 0.31 →							
Density [10]	← 503 lbm/ft^3(0.291 lbm/in^3) →							

[10] ASME Code, Section II, Part D.

[11] ASME Code, Section III, Appendix I.

* Calculated based on Design Stress Intensity:

$$\left(\frac{S_{m-temp}}{S_{m\,70^\circ}}\right) S_{u70} = S_{u-temp}$$

Table 3.3-11 Mechanical Properties of 6061-T651 and 6061-T6 Aluminum Alloy

Property	**Value**							
Temperature (°F)	70	100	200	300	400	500	600	700
Ultimate strength [15], S_u (ksi)	42.0	40.7	38.2	31.5	17.2	6.7	3.4	2.1
Yield strength, [15] Sy (ksi)	35.0	33.9	32.2	26.9	14.0	5.3	2.5	1.4
Design Stress Intensity [10] S_m (ksi)	10.5	10.5	10.5	8.4	4.4	--	--	--
Modulus of Elasticity, [10] E ($\times 10^3$ ksi)	10.0	9.9	9.6	9.2	8.7	8.1	7.0	--
Coefficient of Thermal Expansion, [10] α ($\times 10^{-6}$ in/in/°F)	—	12.6	12.91	13.22	13.52	13.7	14.3	--
Poisson's Ratio [10]	0.33							
Density [10]	0.098 lbm/in^3							

[10] ASME Code, Section II, Part D.

[15] Military Handbook MIL-HDBK-5G.

Table 3.3-12 Mechanical Properties of Concrete

Property	**Value**					
Temperature (°F)	70	100	200	300	400	500
Compressive Strength (psi) [16]	4000	4000	4000	3800	3600	3400
Modulus of Elasticity, [16] ($\times 10^3$ ksi)	—	3.64	3.38	3.09	3.73	3.43
Coefficient of Thermal Expansion, [16] α ($\times 10^{-6}$ in/in/°F)	5.5					
Density [16]	140 lbm/ft^3					

16. Handbook of Concrete Engineering.

Table 3.3-13 Mechanical Properties of Neutron Shield Materials

Property	**NS-3**	**NS-4-FR**
Density[17] (lbm/in^3)	0.0656	0.0607

17. GESC Product Data.

Table 3.3-14 Mechanical Properties of SA-537 Class 2 Carbon Steel

Property	**Value**							
Temperature (°F)	70	200	300	400	500	700	800	850
Ultimate Tensile Stress S_u (ksi)	80.0[10]	80.0[10]	80.0[10]	79.3[10]	79.3[10]	77.8[10]	74.8[40]	69.8[40]
Yield Stress, S_y (ksi)	60.0[10]	55.0[10]	52.2[10]	50.0[10]	47.6[10]	44.5[10]	36.6[40]	35.1[40]
Design Stress Intensity, S_m (ksi)	26.7[10]	26.7[10]	26.7[10]	26.4[10]	26.4[10]	25.9[10]	24.4[40]	23.2[40]
Modulus of Elasticity[10] (ksi)	29.5E+3	28.8E+3	28.3E+3	27.7E+3	27.3E+3	25.5E+3	24.2E+3	23.3E+3
Alternating Stress[11] @ 10 cycles (ksi)	580.0	552.8	543.0	531.5	523.7	477.0	-	-
Alternating Stress[11] @ 10^6 cycles (ksi)	12.5	11.9	11.7	11.5	11.3	10.3	-	-
Coefficient of Thermal Expansion,[10] α (in/in/°F)	No value given	5.89E-6	6.26E-6	6.61E-6	6.91E-6	7.41E-6	7.59E-6	-
Poisson's Ratio[10]	0.31							
Density[10]	482 lbm/ft^3 (0.279 lbm/in^3)							

10 ASME Code, Section II, Part D.
11 ASME Code, Section III, Appendix I, Table I-9.1
40 ASME Code Case, N-650.

Table 3.3-15 Mechanical Properties of METAMIC 6061

Property	**Value**				
Temperature (°F)	70	200	500	800	900
Ultimate Tensile Stress, S_u (ksi)	41.5	39.1	18.9	8.3	4.0
Yield Stress, S_y (ksi)	29.5	26.9	14.8	6.7	3.2
Design Stress Intensity, S_m (ksi)	13.8	13.0	6.3	2.7	1.3
Modulus of Elasticity (ksi)	18.5	13.9	11.1	8.8	8.1
Coefficient of Thermal Expansion, $\alpha \times 10^{-6}$ (in/in/ °F)	6.57	6.57	5.89	4.74	4.57
Poisson's Ratio	0.30				
Density (lbm/in^3)	0.095				

Note: METAMIC 6061 Boron Carbide Metal Matrix Composite is a proprietary material of California Consolidated Technology, Inc.

3.3.2 Fracture Toughness Considerations

The primary structural materials of the Standard transportable storage canister and baskets are a series of stainless steels. These stainless steel materials do not undergo a ductile-to-brittle transition in the temperature range of interest for the Universal Storage System. Fracture toughness is not a concern for these stainless steel materials.

The Advanced basket is fabricated primarily from SA 537, Class 2 ferritic steel and the optional lift anchors for the Standard and Advanced vertical concrete cask are fabricated from A 537, Class 2, and A 615, Grade 75 ferritic steels. The plates of the Advanced basket are 0.188 to 0.5 inch thick depending on the location of the plate. The lifting lug and base plate of the lift anchors are designed as 2-inch thick, A 537 Class 2, steel plates in accordance with ANSI N14.6. Applying the fracture toughness requirements of ASME Code Section III, Subsection NF-2311(b)13 and Figure NF-2311(b)-1, for the Advanced basket plates, the minimum allowable design metal temperature is below –40°F and for the lifting lugs, it is –5°F (Curve D, 0.6-inch and 2-inch nominal thickness, respectively). The Advanced basket holding fuel has sufficient heat that the low temperature limit is not reached. The concrete cask lift anchors are restricted to be used only when the surrounding air temperatures are greater than, or equal to, 0°F. Consequently, impact testing of the material is not required. There are eight reinforcing bars (rebar) (A 615, Grade 75) for each lift anchor, and the rebars are not considered fracture-critical components because multiple, redundant load paths exist, in the same manner that bolted systems are considered in Section 5 of NUREG/CR-1815 [25]. Therefore, brittle fracture evaluation of the rebar material is not required.

The Standard BWR basket support disks are 0.625-inch thick, SA 533, Type B, Class 2, ferritic steel plate. Per ASME Code Section III, Subsection NG-2311(a)(1), impact testing of material with a nominal section thickness of 5/8 inch (16 mm) and less is not required. To provide added assurance of the fracture toughness of the BWR support disk material, Charpy V-notch (C_v) impact testing is specified on Drawing No. 790-573 for each plate of material in the heat treated condition in accordance with ASME Code Section III, Subsection NG-2320. Acceptance values shall be per ASTM A-370, Section 26.1, with a minimum average value of 20 Mils lateral expansion at a Lowest Service Temperature of - 40°F.

3.4 General Standards

3.4.1 Chemical and Galvanic Reactions

The materials used in the fabrication and operation of the Universal Storage System are evaluated to determine whether chemical, galvanic or other reactions among the materials, contents, and environments can occur. All phases of operation — loading, unloading, handling, and storage — are considered for the environments that may be encountered under normal, off-normal, or accident conditions. Based on the evaluation, no potential reactions that could adversely affect the overall integrity of the vertical concrete cask, the fuel basket, the transportable storage canister or the structural integrity and retrievability of the fuel from the canister have been identified. The evaluation conforms to the guidelines of NRC Bulletin 96-04 [18].

3.4.1.1 Component Operating Environment

Most of the component materials of the Universal Storage System are exposed to two typical operating environments: 1) an open canister containing fuel pool water or borated water with a pH of 4.5 and spent fuel or other radioactive material; or 2) a sealed canister containing helium, but with external environments that include air, rain water/snow/ice, and marine (salty) water/air. Each category of canister component materials is evaluated for potential reactions in each of the operating environments to which those materials are exposed. These environments may occur during fuel loading or unloading, handling or storage, and include normal, off-normal, and accident conditions.

The long-term environment to which the canister's internal components are exposed is dry helium. Both moisture and oxygen are removed prior to sealing the canister. The helium displaces the oxygen in the canister, effectively precluding chemical corrosion. Galvanic corrosion between dissimilar metals in electrical contact is also inhibited by the dry environment inside the sealed canister. NAC's operating procedures provide two helium backfill cycles in series separated by a vacuum-drying cycle during the preparation of the canister for storage. Therefore, the sealed canister cavity is effectively dry and galvanic corrosion is precluded.

The control element assembly, thimble plugs and non-fuel components—including start-up sources and instrument segments—are non-reactive with the fuel assembly. By design, the control components and non-fuel components are inserted in the guide tubes of a fuel assembly. During reactor operation, the control and non-fuel components are immersed in acidic water

having a high flow rate and are exposed to significantly higher neutron flux, radiation and pressure than will exist in dry storage. The control and non-fuel components are physically placed in storage in a dry, inert atmosphere in the same configuration as when used in the reactor. There are no adverse reactions, such as gas generation, galvanic or chemical reactions or corrosion, that occur in the reactor coolant water, since these components are designed for use and operation in this environment and are non-reactive with the Zircaloy guide tubes and fuel rods. There are no aluminum or carbon steel parts, and no gas generation or corrosion occurs during prolonged water immersion (20 – 40 years). Thus, no adverse reactions occur with the control and non-fuel components over prolonged periods of dry storage.

3.4.1.2 Component Material Categories

The component materials are categorized in this section for their chemical and galvanic corrosion potential on the basis of similarity of physical and chemical properties and component functions. The categories are stainless steels, nonferrous metals, carbon steel, coatings, concrete, and criticality control materials. The evaluation is based on the environment to which these categories could be exposed during operation or use of the canister.

The canister component materials are not reactive among themselves, with the canister's contents, nor with the canister's operating environments during any phase of normal, off-normal, or accident condition, loading, unloading, handling, or storage operations. Since no reactions will occur, no gases or other corrosion by-products will be generated.

The control component and non-fuel component materials are those that are typically used in the fabrication of fuel assemblies, i.e., stainless steels, Inconel 625, and Zircaloy, so no adverse reactions occur in the inert atmosphere that exists in storage. The control element assembly, thimble plugs and non-fuel components—including start-up sources or instrument segments to be inserted into a fuel assembly—are non-reactive among themselves, with the fuel assembly, nor with the canister's operating environment for any storage condition.

3.4.1.2.1 Stainless Steels

No reaction of the canister component stainless steels is expected in any environment except for the marine environment, where chloride-containing salt spray could potentially initiate pitting of the steels if the chlorides are allowed to concentrate and stay wet for extended periods of time

(weeks). Only the external canister surface could be so exposed. The corrosion rate will, however, be so low that no detectable corrosion products or gases will be generated. The Universal Storage System has smooth external surfaces to minimize the collection of such materials as salts.

Galvanic corrosion between the various types of stainless steels does not occur because there is no effective electrochemical potential difference between these metals. No coatings are applied to the stainless steels. An electrochemical potential difference does exist between austenitic (300 series) stainless steel and aluminum. However, the stainless steel becomes relatively cathodic and is protected by the aluminum.

The canister confinement boundary uses Type 304L stainless steel for all components, except the shield lid, which is made of Type 304 stainless steel. Type 304L resists chromium-carbide precipitation at the grain boundaries during welding and assures that degradation from intergranular stress corrosion will not be a concern over the life of the canister. Fabrication specifications control the maximum interpass temperature for austenitic steel welds to less than 350°F. The material will not be heated to a temperature above 800°F, other than by welding thermal cutting. Minor sensitization of Type 304 stainless steel that may occur during welding will not affect the material performance over the design life because the storage environment is relatively mild.

Based on the foregoing discussion, no potential reactions associated with the stainless steel canister or basket components are expected to occur.

3.4.1.2.2 Nonferrous Metals

Aluminum is used as a heat transfer component in the Universal Storage System spent fuel basket, and aluminum components in electrical contact with austenitic stainless steel or carbon steel could experience corrosion driven by electrochemical Electromotive Force (EMF) when immersed in water. The conductivity of the water is the dominant factor. BWR fuel pool water is demineralized and is not sufficiently conductive to promote detectable corrosion for these metal couples. PWR pool water, however, does provide a conductive medium. The only aluminum components that will be in contact with stainless steel and exposed to the pool water are the alloy 6061-T651 heat transfer disks in the Standard fuel basket, and the 6061-T651 cooling shunts and the Type 1100-H14 cooling inserts in the Advanced basket.

Aluminum produces a thin surface film of oxidation that effectively inhibits further oxidation of the aluminum surface. This oxide layer adheres tightly to the base metal and does not react readily with the materials or environments to which the fuel basket will be exposed. The volume of the aluminum oxide does not increase significantly over time. Thus, binding due to corrosion product build-up during future removal of spent fuel assemblies is not a concern. The borated water in a PWR fuel pool is an oxidizing-type acid with a pH on the order of 4.5. However, aluminum is generally passive in pH ranges down to about 4 [19]. Data provided by the Aluminum Association [20] shows that aluminum alloys are resistant to aqueous solutions (1-15%) of boric acid (at 140°F). Based on these considerations and the very short exposure of the aluminum components in the Standard and Advanced fuel baskets to the borated water, oxidation of the aluminum is not likely to occur beyond the formation of a thin surface film. No observable degradation of aluminum components is expected as a result of exposure to BWR or PWR pool water at temperatures up to 200°F, which is higher than the permissible fuel pool water temperature.

Aluminum is high on the electromotive potential table, and it becomes anodic when in electrical contact with stainless or carbon steel in the presence of water. BWR pool water is demineralized and is not sufficiently conductive to promote detectable corrosion for these metal couples. PWR pool water is sufficiently conductive to allow galvanic activity to begin. However, exposure time of the aluminum components to the PWR pool environment is short. The long-term storage environment is sufficiently dry to inhibit galvanic corrosion.

From the foregoing discussion, it is concluded that the initial surface oxidation of the aluminum component surfaces effectively inhibits any potential galvanic reactions.

Heat transfer disks fabricated from 6061 aluminum alloy are used in the Standard PWR and BWR fuel baskets, and cooling shunts of the same material are used in the Advanced basket, to augment heat transfer from the spent fuel through the basket structure to the canister exterior. Vendor and Nuclear Regulatory Commission safety evaluations of the NUHOMS Dry Spent Fuel Storage System (Docket No. 72-1004) have concluded that combustible gases, primarily hydrogen, may be produced by a chemical reaction and/or radiolysis when aluminum or aluminum flame-sprayed components are immersed in spent fuel pool water. The evaluations further concluded that it is possible, at higher temperatures (above 150 - 160°F), for the aluminum/water reaction to produce a hydrogen concentration in the canister that approaches or exceeds the Lower Flammability Limit (LFL) for hydrogen of 4 percent. The NRC Inspection Reports No. 50-266/96005 and 50-301/96005 dated July

01, 1996, for the Point Beach Nuclear Plant concluded that hydrogen generation by radiolysis was insignificant relative to other sources.

Thus, it is reasonable to conclude that small amounts of combustible gases, primarily hydrogen, may be produced during canister loading or unloading operations as a result of a chemical reaction between the 6061-T6 and 6061-T651 aluminum in the fuel basket and the spent fuel pool water. The generation of combustible gases stops when the water is removed from the cask or canister and the aluminum surfaces are dry.

A galvanic reaction may occur at the contact surfaces between the aluminum disks and the stainless steel tie rods and spacers in the Standard basket, or between the cooling shunts and the stainless steel canister of carbon steel plates in the Advanced basket, in the presence of an electrolyte, like the pool water. The galvanic reaction ceases when the electrolyte is removed. Each metal has some tendency to ionize, or release electrons. An EMF associated with this release of electrons is generated between two dissimilar metals in an electrolytic solution. The EMF between aluminum and stainless steel is small and the amount of corrosion is directly proportional to the EMF. Loading operations generally take less than 24 hours, a large portion of which has the canister immersed in and open to the pool water after which the electrolyte (water) is drained and the cask or canister is dried and back-filled with helium, effectively halting any galvanic reaction.

The potential chemical or galvanic reactions do not have a significant detrimental effect on the ability of the aluminum heat transfer disks to perform their function for all normal and accident conditions associated with dry storage.

Loading Operations

After the canister is removed from the pool and during canister closure operations, an air space is created inside the canister beneath the shield lid by the drain-down of 50 gallons of water so that the shield-lid-to-canister-shell weld can be performed. The resulting air space is approximately 66 inches in diameter and 3 inches deep. As there is some clearance between the inside diameter of the canister shell and the outside diameter of the shield lid, it is possible that gases released from a chemical reaction inside the canister could accumulate beneath the shield lid. A bare aluminum surface oxidizes when exposed to air, reacts chemically in an aqueous solution, and may react galvanically when in contact with stainless steel in the presence of an aqueous solution.

The reaction of aluminum in water, which results in hydrogen generation, proceeds as:

$$2\ Al + 3\ H_20 \Rightarrow Al_2O_3 + 3\ H_2$$

The aluminum oxide (Al_2O_3) produces the dull, light gray film that is present on the surface of bare aluminum when it reacts with the oxygen in air or water. The formation of the thin oxide film is a self limiting reaction as the film isolates the aluminum metal from the oxygen source acting as a barrier to further oxidation. The oxide film is stable in pH neutral (passive) solutions, but is soluble in borated PWR spent fuel pool water. The oxide film dissolves at a rate dependent upon the pH of the water, the exposure time of the aluminum in the water, and the temperatures of the aluminum and water. The cooling inserts are anodized to improve radiative heat transfer. The anodized aluminum is less reactive.

PWR spent fuel pool water is a boric acid and demineralized water solution. BWR spent fuel pool water does not contain boron and typically has a neutral pH (approximately 7.0). The pH, water chemistry, and water temperature vary from pool to pool. Since the reaction rate is largely dependent upon these variables, it may vary considerably from pool to pool. Thus, the generation rate of combustible gas (hydrogen) that could be considered representative of spent fuel pools in general is very difficult to accurately calculate, but the reaction rate would be less in the neutral pH BWR pool.

The carbon steel plates used in the Advanced basket, and the carbon steel support plates used in the Standard BWR basket, are coated with electroless nickel. The coating protects the carbon steel during the comparatively short time that the canister is immersed in, or contains, water. The coating is described in Section 3.8.3. The coating is non-reactive with the BWR pool water and does not off-gas or generate gases as a result of contact with the pool water. Consequently, there are no flammable gases that are generated by the coating. A coating is not used in Standard PWR basket configurations.

To ensure safe loading and/or unloading of the transportable storage canister, the loading and unloading procedures presented in Chapter 8 provide for the monitoring of hydrogen gas before and during the welding operations joining the shield lid to the canister shell. The monitoring system is capable of detecting hydrogen at 60% of the lower flammability limit for hydrogen (i.e. $0.6 \times 4.0 = 2.4\%$). The hydrogen detector is mounted so as to detect hydrogen prior to initiation of the weld, and continuously during the welding operation through the completion of the shield lid to canister shell root pass. Detection of hydrogen in a concentration exceeding 2.4% shall be

cause for the welding operation to stop. If hydrogen gas is detected at concentrations above 2.4% at any time, the hydrogen gas shall be removed by flushing ambient air into the region below the weld. Hydrogen gas monitoring is not performed during welding of the vent and drain port as welding of the port covers is performed when the canister is dry and there is no reasonable expectation of hydrogen gas in the area of the weld. To remove hydrogen from below the shield lid, the vacuum pump is attached to the vent port and operated for a sufficient period of time to remove at least five times the air volume of the space below the lid by drawing ambient air through the gap between the shield lid and the canister shell, thus removing or diluting any combustible gas concentrations.

The vacuum pump shall exhaust to a system or area where hydrogen flammability is not an issue. If hydrogen gas is detected at the port covers, the cover is removed and service air is used to flush combustible gases from the port. Once the root pass weld is completed there is no further likelihood of a combustible gas burn because the ignition source is isolated from the combustible gas. Once welding of the shield lid has been completed, the canister is drained, vacuum dried and back-filled with helium.

No hydrogen is expected to be detected prior to, or during, the welding operations. The vent port in the shield lid remains open from the time that the loaded canister is removed from the spent fuel pool until the time that the vent port cover is ready to be welded to the shield lid. Since the postulated combustible gases are very light, the open vent port provides an escape path for any gases that are generated prior to the time that the canister is vacuum dried. Once the canister is dry, no combustible gases form within the canister. The mating surfaces of the support ring and inner lid are machined to provide a good level fitup, but are not machined to provide a metal to metal seal. Consequently, additional exit paths for the combustible gases exist at the circumference of the shield lid.

Unloading Operations

It is not expected that the canister will contain a measurable quantity of combustible gases during the time period of storage. The canister is vacuum dried and backfilled with helium immediately prior to being welded closed. There are only minor mechanisms by which hydrogen is generated after the canister is dried and sealed.

As shown in Section 8.3, the principal steps in opening the canister are the removal of the structural lid, the removal of the vent and drain port covers, and the removal of the shield lid. These steps are expected to be performed by cutting or grinding. The design of the canister precludes monitoring for the presence of combustible gases prior to the removal of the structural lid and the vent or drain port covers. Following removal of the vent port cover, a vent line is connected to the vent port quick disconnect. The vent line incorporates a hydrogen gas detector which is capable of detecting hydrogen at a concentration of 2.4% (60% of its lower flammability limit of 4%). The pressurized gases (expected to be greater than 96% helium) in the canister are expected to carry combustible gases out of the vent port. If the exiting gases in the vent line contain no hydrogen at concentrations above 2.4%, the drain port cover weld is cut and the cover removed. If levels of hydrogen gas above 2.4% concentration are detected in the vent line, then the vacuum system is used to remove all residual gas prior to removal of the drain port cover. During the removal of the drain port cover, the hydrogen gas detector is attached to the vent port to ensure that the hydrogen gas concentration remains below 2.4%. Following removal of the drain port cover, the canister is filled with water using the vent and drain ports. Prior to cutting the shield lid weld, 50 gallons of water are removed from the canister to permit the removal of the shield lid. Monitoring for hydrogen would then proceed as described for the loading operations.

3.4.1.2.3 Carbon Steel

Carbon steel support disks are used in the Standard BWR basket configuration and carbon steel plates are used in the Advanced basket. There is a small electrochemical potential difference between carbon steel (SA 533 or SA 537) and aluminum and stainless steel components. When in contact in water, these materials exhibit limited electrochemically-driven corrosion. BWR pool water is demineralized and is not sufficiently conductive to promote detectable corrosion for these metal couples. In addition, the carbon steel support disks in the Standard BWR basket, and the plates of the Advanced basket, are coated with electroless nickel to protect the carbon steel surface during exposure to air or to spent fuel pool water, reducing the possibility of corrosion. Once the canister is loaded, the water is drained from the cavity, the air is evacuated, and the canister is backfilled with helium and sealed. Removal of the water and the moisture eliminates the catalyst for galvanic corrosion. The canister operating procedures (see Chapter 8) provide two backfill cycles in series separated by a vacuum drying cycle during closing of the canister. The displacement of oxygen by helium effectively inhibits corrosion.

The transfer cask structural components are fabricated primarily from ASTM A588 and A36 carbon steel. The exposed carbon steel components are coated with either Keeler & Long E-Series Epoxy Enamel or Carboline 890 to protect the components during in-pool use and to provide a smooth surface to facilitate decontamination.

The concrete shell of the vertical concrete cask contains an ASTM A36 carbon steel liner, as well as other carbon steel components. The exposed surfaces of the base of the concrete cask and the liner are coated with either Keeler & Long E-Series Epoxy Enamel, or Carboline 890, to provide protection from weather related moisture.

No potential reactions associated with the BWR basket carbon steel disks, the transfer cask components or vertical concrete cask components are expected to occur.

3.4.1.2.4 Coatings

The exposed carbon steel surfaces of the transfer cask, the transfer cask adaptor plate and the vertical concrete cask are coated with either Keeler & Long E-Series Epoxy Enamel or Carboline 890. These coatings are approved for Nuclear Service Level 2 use. Load bearing surfaces (i.e., the bottom surface of the trunnions and the contact surfaces of the transfer cask doors and rails) are not painted, but are coated with an appropriate nuclear grade lubricant, such as Neolube®. The technical specifications for these coatings are provided in Sections 3.8.1 and 3.8.2, respectively.

Carbon steel support disks used in the Standard BWR basket, and the carbon steel plates used in the Advanced basket, are coated with electroless nickel. The coating is applied in accordance with ASTM B733-SC3, Type V, Class 1 [37]. As described in Section 3.8.3, the electroless nickel coating process uses a chemical reducing agent in a hot aqueous solution to deposit nickel on a catalytic surface. The deposited nickel coating is a hard alloy of uniform thickness of 25 μm (0.001 inch), containing from 4% to 12% phosphorus. Following its application, the nickel coating combines with oxygen in the air to form a passive oxide layer that effectively eliminates free electrons on the surface that would be available to cathodically react with water to produce hydrogen gas. Consequently, the production of hydrogen gas in sufficient quantities to facilitate combustion is highly unlikely.

3.4.1.2.5 Concrete

The vertical concrete storage cask is fabricated of 4000 psi, Type 2 Portland cement that is reinforced with vertical and circumferential carbon steel rebar. Quality control of the proportioning, mixing, and placing of the concrete, in accordance with the NAC fabrication specification, will make the concrete highly resistant to water. The concrete shell is not expected to experience corrosion, or significant degradation from the storage environment through the life of the cask.

3.4.1.2.6 Criticality Control Material

The criticality control material is boron carbide mixed in an aluminum alloy matrix. In the Standard basket, sheets of this material are affixed to one or more sides of the designated fuel tubes and completely enclosed by a welded stainless steel cover. In the Advanced basket, sheets of the material are assembled using a slot and tab method that is essentially identical to that used to assemble the basket plates. The composite matrix fabrication method used for the materials resists corrosion similar to aluminum, and is protected by an oxide layer that forms shortly after fabrication and inhibits further interaction with the stainless steel or carbon steel. Consequently, no potential reactions associated with the aluminum-based criticality control material are expected.

3.4.1.2.7 Neutron Shielding Material

The neutron shielding material is a hydrogenated polymer, either NS-3 or NS-4-FR, consisting primarily of aluminum, carbon, oxygen and hydrogen, to which boron carbide (B_4C) is added to improve shielding effectiveness. These materials are similar in composition and performance. They are used in the Standard and Advanced transfer casks and in the shield plug of the vertical concrete storage cask to provide radiation shielding. The acceptable performance of the material has been demonstrated by use and testing. The material has been used in two licensed storage casks in the United States for up to 10 years and in more than 50 licensed casks in Japan, Spain and the United Kingdom. There are no reports that the shielding effectiveness of NS-4-FR material has degraded in these applications, demonstrating the long-term reliability for the purpose of shielding neutrons from personnel and the environment. There are no potential reactions associated with the polymer structure of the material and the stainless steel or carbon steel in which it is encapsulated during use.

The chemistry of the material (e.g., the way the elements are bonded to one another) contributes significantly to the fire retardant capability of the NS-4-FR. Even though the material contains hydrogen, the ingredients were selected so that the NS-4-FR resists fire. Approximately 90% of the off-gassing that does occur consists of water vapor.

The thermal performance of NS-3 and NS-4-FR has been demonstrated by long-term functional stability tests of the material at temperatures from -40°F to 338°F. These tests included specimens open to the atmosphere and enclosed in a cavity at both constant and cyclic thermal loads. The tests evaluated material loss though off-gassing and material degradation. The results of the tests demonstrate that, in the temperature range of interest, the NS-4-FR does not exhibit loss of material by off-gassing, does not generate any significant gases, and does not suffer degradation or embrittlement. Further, the tests demonstrated that encased material, as it is used in the transfer casks and lid components, performed significantly better than exposed material. Consequently, the formation of flammable gases is not a concern.

Radiation exposure testing of NS-3 and NS-4-FR in reactor pool water demonstrated no physical deterioration of the material and no significant loss of hydrogen (less than 1%). The tests also demonstrated that the materials retain their neutron shield capability over the cask's 50-year design life with substantial margin. The radiation testing has shown that detrimental embrittlement and loss of hydrogen from the material do not occur at dose rates (9×10^{14} n/cm^2) that exceed those that would occur assuming the continuous storage of design basis fuel for a 50-year life (estimated to be 1.7×10^{12} cm^2/yr). Consequently, detrimental deterioration or embrittlement due to radiation flux does not occur.

The NS-4-FR in the Standard and Advanced transfer casks is sandwiched between the outer shell and the lead shield, and is enclosed within a welded steel shell where the shell seams are welded to top and bottom plates with full penetration or fillet welds forming a closed system. Since the system is closed, the NS-4-FR will maintain its form over the expected lifetime of the transfer cask's radiation exposure. The material's placement between the lead shield and the outer shell does not allow the material to redistribute within the annulus.

The NS-3 or NS-4-FR shield material is similarly enclosed in the storage cask shield plug, since a disk of either material is captured in an annulus formed by a carbon steel ring and two carbon steel plates. This material cannot redistribute within this volume.

3.4.1.3 General Effects of Identified Reactions

No potential chemical, galvanic, or other reactions have been identified for the Universal Storage System. Therefore, no adverse conditions, such as the generation of flammable or explosive quantities of combustible gases or an increase in neutron multiplication in the fuel (criticality) because of boron precipitation, can result during any phase of canister operations for normal, off-normal, or accident conditions.

3.4.1.4 Adequacy of the Canister Operating Procedures

Based on this evaluation, which results in no identified reactions, it is concluded that the Universal Storage System operating controls and procedures presented in Chapter 8 are adequate to minimize the occurrence of hazardous conditions.

3.4.1.5 Effects of Reaction Products

No potential chemical, galvanic, or other reactions have been identified for the Universal Storage System. Therefore, the overall integrity of the canister and the structural integrity and retrievability of the spent fuel are not adversely affected for any operations throughout the design basis life of the canister. Based on the evaluation, no change in the canister or fuel cladding thermal properties is expected, and no corrosion of mechanical surfaces is anticipated. No change in basket clearances or degradation of any safety components, either directly or indirectly, is likely to occur since no potential reactions have been identified.

3.4.2 Positive Closure

The Universal Storage System employs a positive closure system composed of multi-pass welds to join the canister shield lid and the canister structural lid to the shell. The penetrations to the canister cavity through the shield lid are sealed by welded port covers. The welded closure system precludes the possibility of inadvertent opening of the canister. The Standard and Advanced configurations of the shield lid employ slightly different port cover designs as shown in Figures 3.4.2-1 and 3.4.2-2 for the Standard and Advanced configurations, respectively.

The top of the vertical concrete cask is closed by a bolted lid that weighs approximately 2,500 pounds. The weight of the lid, its inaccessibility, and the presence of the bolts effectively preclude inadvertent opening of the lid. In addition, a security seal is provided between two of the lid bolts to detect tampering with the closure lid.

Figure 3.4.2-1 Standard Canister Welded Closure

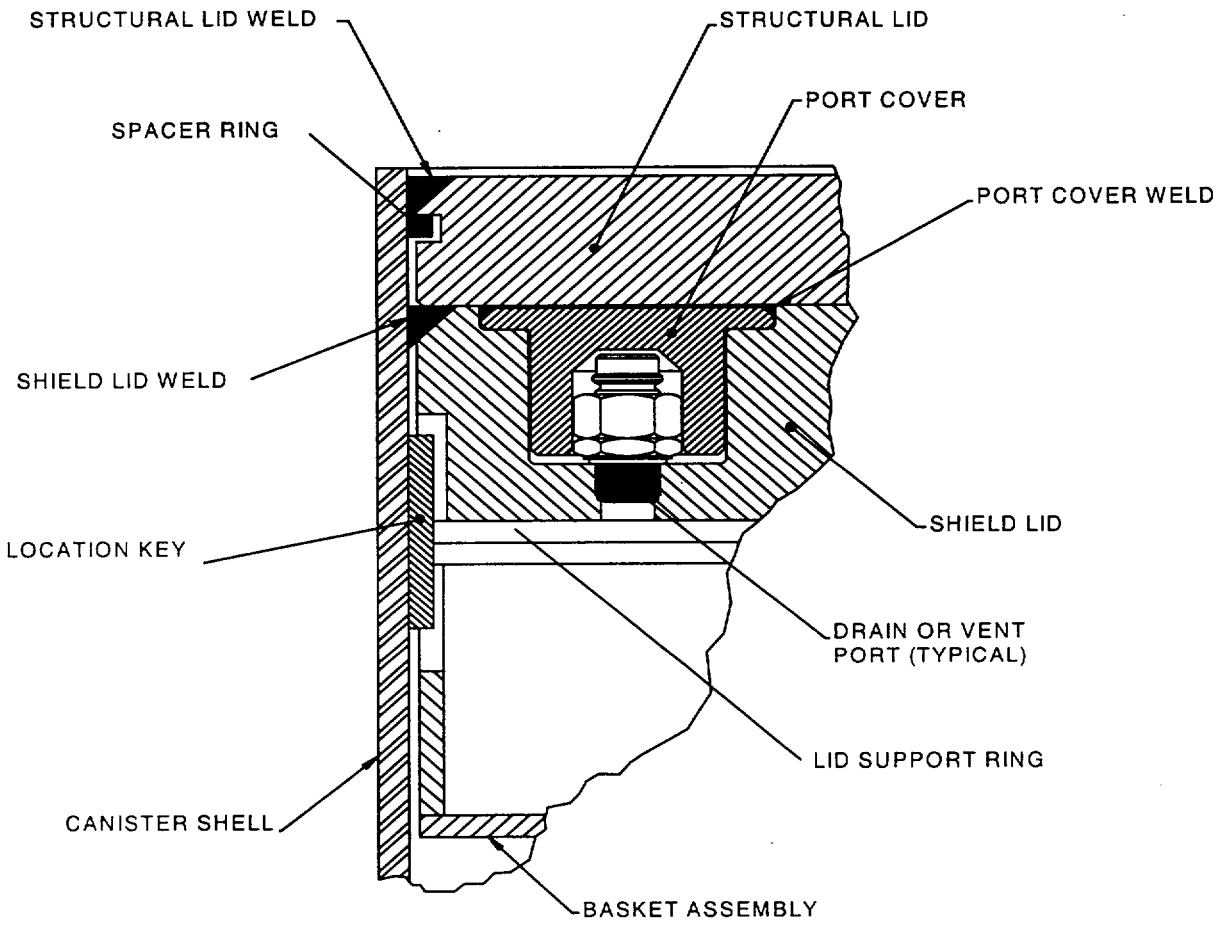

Figure 3.4.2-2 Advanced Canister Welded Closure

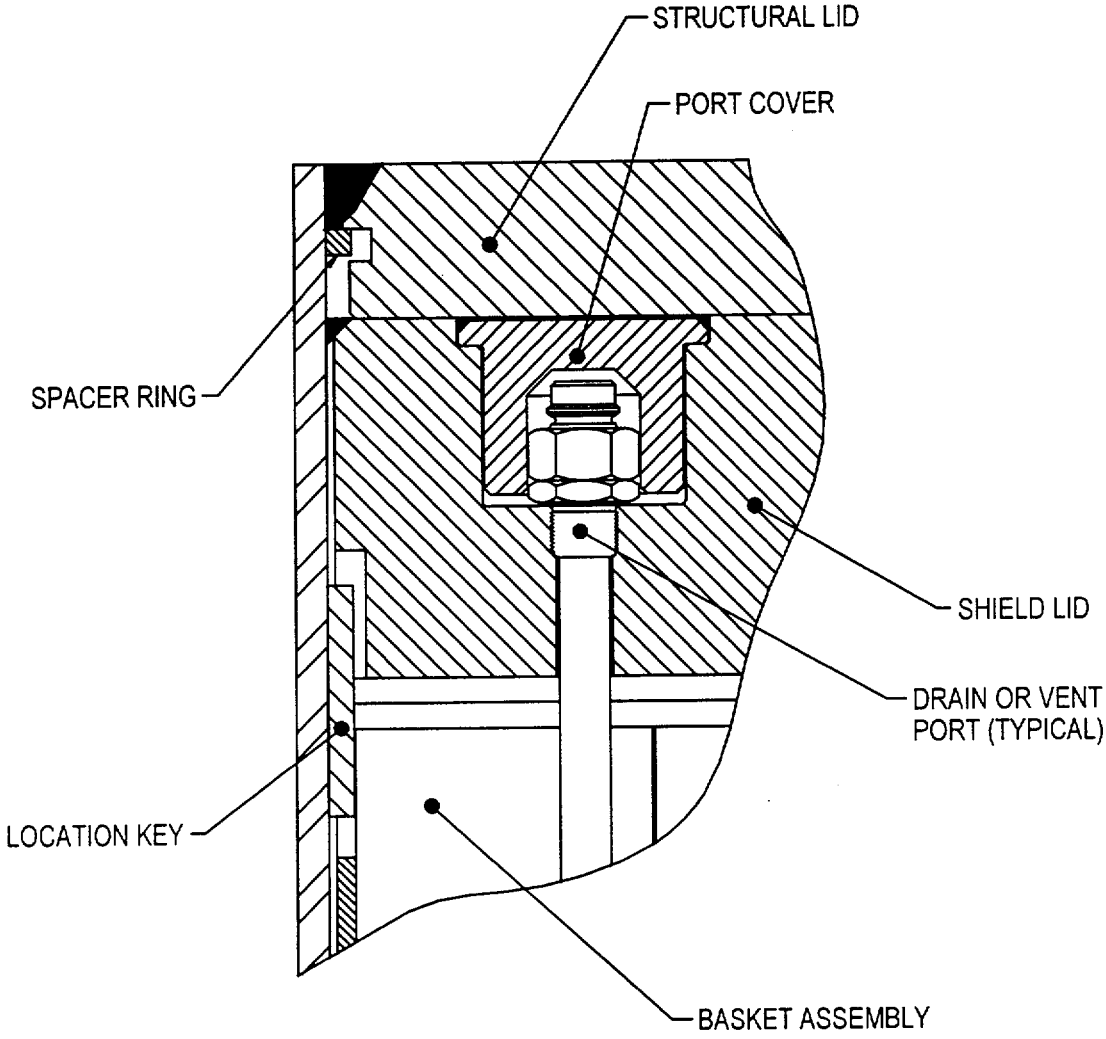

THIS PAGE INTENTIONALLY LEFT BLANK

3.4.3 Lifting Devices

To provide more efficient handling of the Universal Storage System, different methods of lifting are designed for each of the components. The transfer cask, the transportable storage canister, and the concrete cask, are handled using trunnions, hoist rings, and a system of jacks and air pads, respectively.

The transfer cask is provided in a Standard, Advanced or 100-ton configuration. The Standard transfer cask is used for vertical handling of the Standard canister. The Advanced transfer cask is used for vertical handling of the Standard or Advanced canister. The 100-ton transfer cask is used for the vertical and horizontal handling of the Standard or the Advanced canister. The 100-ton transfer cask weighs less than the Standard and Advanced transfer casks and is designed to accommodate sites having a 100-ton cask handling crane weight limit. Canister handling, fuel loading and canister closing are operationally identical for any transfer cask configuration.

The Standard and Advanced transfer cask designs are identical except that the Advanced transfer cask incorporates a support plate for the trunnions, which allows it to accommodate the additional weight of the Advanced canister. The 100-ton transfer cask also uses support plates at the trunnions (designed with only two). Rotation of the 100-ton transfer cask between the vertical and horizontal orientations is accomplished using a rotation fixture on the transfer cask cradle. There are no rotation features in the transfer cask body.

The vertical concrete cask is also provided in a Standard or Advanced configuration. The Advanced design differs from the Standard design in that it incorporates T-shaped channel weldments on the inside face of the concrete cask liner to support the canister during a hypothetical tipover event, and has an increased pedestal plate thickness and integrated welded baffle pipes in the concrete cask air inlets. The Standard concrete cask may only hold Standard canisters. Advanced or Standard configuration canisters may be loaded in the Advanced concrete cask. The Advanced concrete cask has a higher weight than the Standard concrete cask, but performs the same design functions of heat removal and protection of the loaded Advanced canister.

The designs of the Universal Storage System and Universal Transport System components address the concerns identified in U.S. NRC Bulletin 96-02, "Movement of Heavy Loads Over

Spent Fuel, Over Fuel in the Reactor Core, or Over Safety-Related Equipment" (April 11, 1996) as follows:

(1) The lifting and handling components satisfy the requirements of NUREG-0612 and ANSI N14.6 for safety factors on redundant or nonredundant load paths as described in this chapter.

(2) Transfer or transport cask lifting in the spent fuel pool or cask loading pit, or transfer or transport cask lifting and movement above the spent fuel pool operating floor will be addressed on a plant-specific basis.

The transfer cask is designed as a heavy-lifting device that satisfies the requirements of NUREG-0612 and ANSI N14.6 for lifting the fully loaded canister of fuel and water, together with the shield lid, which is the maximum weight for the transfer cask during a lifting operation with a given configuration.

The transportable storage canister remains within the transfer cask during all preparation, loading, canister closure, and transfer operations. The canister is equipped with hoist rings threaded into the structural lid to lift the loaded canister and to lower it into the concrete cask after the shield doors are opened. The hoist rings are also used for any subsequent lifting of the loaded dry canister.

The vertical concrete cask is moved using either a system of air pads or by using lifting lugs located at the top of the cask. To use the air pads, the cask is raised by four lifting jacks placed at the jacking pads located near the end of each air inlet to allow the air pads to be installed under the concrete cask. The cask is lowered onto the uninflated air pads, the jacks are removed, and the air pads are inflated to lift the concrete cask and position it as required on the storage pad or transport vehicle. When positioning is complete, the jacks are used to support the cask as the air pads are removed. The lifting lugs are used with a concrete cask transporter that lifts the concrete cask vertically for on-site transfer, typically to the ISFSI pad.

The structural evaluations in this section consider the bounding conditions for each aspect of the analysis. Generally, the bounding condition for lifting devices is represented by the heaviest component, or combination of components, of each configuration. The bounding conditions used in this section are:

Section	Evaluation	Bounding Condition
3.4.3.1	Standard Concrete Cask Lifting Jacks	Heaviest loaded Standard Concrete cask + 10% dynamic load factor
	Standard Concrete Cask Pedestal Loading	Heaviest loaded Standard Canister + 10% dynamic load factor
	Standard Concrete Cask Air PadLift	Heaviest loaded Standard Concrete Cask
	Standard Concrete Cask Top Lifting Lugs Lift	Heaviest loaded Standard Concrete Cask + 10% dynamic load factor
3.4.3.2	Standard Canister Lift	Heaviest loaded Standard Canister + 10% dynamic load factor
3.4.3.3	Standard Transfer Cask Lift	Heaviest loaded Standard Transfer Cask + 10% dynamic load factor
3.4.3.3.3	Standard Transfer Cask Shield Doors and Rails	Heaviest loaded Standard Canister + water, shield doors and 10% dynamic load factor
3.4.3.4	Advanced Concrete Cask Lifting	Heaviest loaded Advanced Concrete cask + 10% dynamic load factor
	Advanced Concrete Cask Lift by Jacks	Heaviest loaded Advanced Concrete cask + load factor
	Advanced Concrete Cask Air Pad Lift	Heaviest loaded Advanced Concrete cask + 10% dynamic load factor
	Advanced Concrete Cask Top Lift by Lugs	Heaviest loaded Advanced Concrete cask + 10% dynamic load factor
3.4.3.5	Advanced Canister Lift	Heaviest loaded Advanced Canister + 10% dynamic load factor
3.4.3.6	Advanced Transfer Cask Lift	Heaviest loaded Advanced Canister + 10% dynamic load factor
3.4.3.7	100-Ton Transfer Cask Vertical Lift	Heaviest loaded Advanced Canister + 10% dynamic load factor
	100-Ton Transfer Cask Horizontal Handling	Heaviest loaded Advanced Canister + 10% dynamic load factor

3.4.3.1 Standard Vertical Concrete Cask Lift Evaluation

The vertical concrete cask is provided in Standard and Advanced configurations. The Advanced concrete cask configuration accommodates the higher heat load and weight of the Advanced canister, but is otherwise similar in design. This section provides the lift evaluation for the Standard configuration. The lift evaluation of the Advanced concrete cask configuration is provided in Section 3.4.3.4.

The Standard vertical concrete cask may be lifted and moved using an air pad system under the base of the cask or four lifting lugs provided at the top of the cask.

Lifting jacks installed at jacking points in the air inlet channels are used to raise the cask so that the air pads can be inserted under the cask. The lifting jacks use a synchronous lifting system to equally distribute the hydraulic pressure among four hydraulic jack cylinders. The calculated weight of the heaviest, loaded concrete cask to be lifted by the jacking system, the BWR Class 5 configuration, is 312,210 pounds.

The lifting lugs are analyzed in accordance with ANSI N14.6 and ACI-349.

3.4.3.1.1 Standard Concrete Cask Bottom Lift by Hydraulic Jack

To ensure that the concrete bearing stress at the jack locations due to lifting the cask does not exceed the allowable stress, the area of the surface needed to adequately spread the load is determined in this section. The allowable bearing capacity of the concrete at each jack location is:

$$U_b = \phi f_c' A = \frac{(0.7)(4{,}000)\pi d^2}{4} = 2{,}199.1\ d^2,$$

where:

ϕ = 0.7 strength reduction factor for bearing,

f_c' = 4,000 psi concrete compressive strength,

$A = \frac{\pi d^2}{4}$, concrete bearing area (d = bearing area diameter).

The concrete bearing strength must be greater than the cask weight multiplied by a load reduction factor, $L_f = 1.4$.

$$2{,}199.1\,d^2 > \frac{L_f \times W}{n} = \frac{1.4(330{,}000\text{ lb})}{4} \Rightarrow d > 7.25\text{ in.},$$

where:

n = the number of jacks, 4
W = the bounding weight of the vertical concrete cask, 330,000 lb.
L_f = the load factor, 1.4

The diameter obtained in the above equation corresponds to the minimum permissible area over which the load must be distributed. The force exerted by the jack is applied through the 2.25-in. - thick steel air inlet top plate. This increases the effective diameter of the load acting on the concrete surface from a 4.13-in. diameter jack cylinder to about 8.63 in., assuming a 45° angle for the cone of influence.

The bearing stress at each jack location with a bearing area of $\frac{\pi \times 8.63\text{in}^2}{4} \approx 58.5\text{in}^2$ is:

$$\sigma = \frac{P}{A} = \frac{(1.4)(330{,}000\text{ lb})}{4(58.5\text{ in}^2)} = 1{,}974\text{psi}$$

The allowable bearing stress is:

$$\sigma = \phi f_c = (0.7)(4{,}000\text{ psi}) = 2{,}800\text{ psi}$$

The Margin of Safety is:

$$MS = \frac{2{,}800.0}{1{,}976.8} - 1 = +0.42$$

Bottom Plate Flexure

During a bottom lift of the concrete cask, the weight of the loaded canister, the pedestal, and the air inlet system are transferred to the bottom plate. As the load is applied, the bottom plate flexes, tending to separate from the concrete. Nelson studs are used to tie the concrete to the bottom plate and prevent separation.

Thirty-two 3/4 in. diameter × 6 3/16-in. long Nelson studs are used in the concrete cask. The shear capacity of each stud is about 23.9 kips [21]. The total load capacity of the studs is:

Capacity = 32 studs × 23.86 kips/stud = 763.5 kips.

The allowable load, P_u, with a load factor of 2.0, as specified in the manufacturer's design data [21], is:

$$P_u = \frac{763.5 \text{ kips}}{2.0} = 381.8 \text{ kips}$$

The total calculated load applied to the concrete cask bottom plate is 84,354 pounds. A conservative weight of 84,400 lb, plus a 10% dynamic load factor is used in the following calculation.

84,400 lb × 1.1 = 92,840 lb

The margin of safety is:

$$MS = \frac{381.8 \text{ kips}}{92.8 \text{ kips}} - 1 = +3.1$$

Base Plate

The weight of the canister is uniformly distributed over the 2-in. thick circular base plate. The unit load is calculated using a weight that bounds the heaviest, loaded canister plus the weight of the cover plate, the base plate, and a 10% dynamic load factor:

$$q = \frac{W}{A} = \frac{(77{,}371 \text{ lb} + 2{,}033 \text{ lb})(1.1)}{\pi \times (33.75 \text{ in})^2} = 24.4 \text{ psi}$$

where:

W = total load on the base plate,
A = the base plate area, and
1.1= dynamic load factor.

The stress, assuming a simply supported plate, is [22]

$$\sigma_r = \frac{99q}{80}\left(\frac{r}{t}\right)^2 = \frac{99 \times 24.4\text{psi}}{80}\left(\frac{25\text{in.}}{2\text{in.}}\right)^2 = 4{,}718\text{ psi.}$$

The allowable stress for flexural members, per the Manual of Steel Construction [23], is:
$F_{allowable} = 0.66\ F_y = 23{,}760$ psi.

The margin of safety is:

$$MS = \frac{23{,}760\text{ psi}}{4{,}718\text{ psi}} - 1 = 4.0$$

The base plate is supported by the base plate stand at four welded locations, each with an arc length of 16.85 in. The bending moment at the cross section of the base plate at the support locations is:

$$M = (L_f)(q)(A)(P_c) = (1.1)(24.4\text{ psi})\left(\frac{\pi\left((33.75\text{ in})^2 - (25\text{ in})^2\right)}{4}\right)(4.375\text{ in.}) \approx 47{,}410\text{ in}\cdot\text{lb}$$

where:

A = area of the base plate stand from the plate support to the edge of the circular plate,
$P_c = 4.25$ in., the location of the resultant force, and
$L_f = 1.1$, a load factor to account for 10% dynamic loading.

The bending stress is:

$$f_b = \frac{6M}{bt^2} = \frac{(6)(47{,}410\text{ in}\cdot\text{lb})}{(16.85\text{ in.})(2\text{ in})^2} \approx 4{,}220\text{ psi}$$

where:

b = circumferential length of the base plate stand in contact with the base plate, and
t = the thickness of the base plate stand.

The base plate is made of ASTM A-36 carbon steel with a yield strength, F_y, of 36,000 psi. The allowable stress for flexural members, per the Manual of Steel Construction [23], is:

$F_b = 0.66\ F_y = 23{,}760$ psi.

The resulting margin of safety is:

$$MS = \frac{23{,}760\ \text{psi}}{4{,}220\ \text{psi}} - 1 = +4.60$$

The maximum shear stress at the support location is:

$$f_v = \frac{W}{L} = \frac{(77{,}371\ \text{lb} + 2{,}033\ \text{lb})(1.1)}{4 \times (16.85\ \text{in.})(2.0\ \text{in.})} \approx 648\ \text{psi}$$

The allowable shear stress is 14,400 psi ($0.4 \times F_y = 0.4 \times 36{,}000$ psi), and the margin of safety is:

$$MS = \frac{14{,}400\ \text{psi}}{648\ \text{psi}} - 1 = 21.2$$

Base Plate Stand (Vertical Plate)

The cylindrical base plate stand is subjected to an axial compressive force and bending moments of the pedestal base plate due to the canister weight and the weight of the base plate stand, itself. The maximum compressive stress, f_a, at the critical cross-section (2 in. × 1.5 in., 8 locations) is:

$$f_a = \frac{(77{,}371\ \text{lb} + 2{,}033\ \text{lb} + 230\ \text{lb})(1.1)}{8(1.5\ \text{in.})(2\ \text{in.})} = 3{,}650\ \text{psi.}$$

Using Part 5, Chapter E and Numerical Values Tables 3–5, Section 5, of the Manual of Steel Construction [23], for A-36 material (F_y = 36,000 psi), the allowable stress, F_a, for compression is:

$F_a = C_a F_y$ (from Table 3 [23]),

when

$Kl/r \leq C_c$.

In this case,

K = 0.65, effective-length factor for the end conditions (rotation and translation fixed),

l = 6.0 in., height of pedestal ring (unbraced member),

$r = \frac{1.5}{\sqrt{12}} = 0.433$, radius of gyration, and

C_c = 126.1, the slenderness ratio from Table 4 [23], and

$$\frac{Kl}{r} = \frac{0.65 \times 6}{0.433} = 9, \text{ which is} < C_c.$$

From Table 3 [23], for $\frac{Kl/r}{C_c} = \frac{9}{126.1} = 0.07$,

$C_a = 0.589$, and the allowable stress is

$F_a = (0.589)\ (36{,}000 \text{ psi}) = 21{,}200 \text{ psi}.$

The bending stress at the same cross-section is conservatively calculated as:

P_t = one-fourth of the total load = (77,371 + 2,033) / 4 = 19,851 lb.

The pedestal is represented as a combination of beams with a total length of 37.7 in. to describe the load path.

P_1 = 19,851 lb × (15.35 / 37.7)
= 8,083 lb, use 8100 lb.

P_2 = 19,851 lb × (22.35 / 37.7)
= 11,768.4 lb, use 11,800 lb.

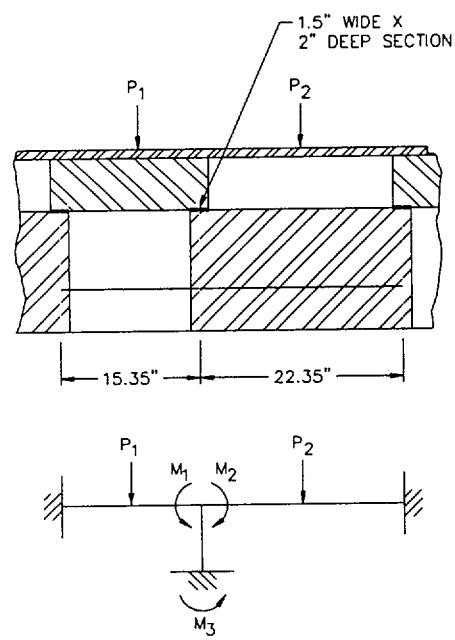

M_1 and M_2 are conservatively considered to be the fixed-end moments of beams with a concentrated load at mid-span (plus a 10% dynamic load factor). L_1 (15.35 in.) and L_2 (22.35 in.) are the lengths of the beams. M_3 (the moment at the 2 in. × 1.5 in. cross-section) is considered to be the difference between M_1 and M_2.

$$M_2 = \frac{1.1\ (P_2L_2)}{8} = \frac{(1.1)(11{,}800\ \text{lb})(22.35\text{in.})}{8} = 36{,}263\ \text{in.·lb.}$$

$$M_3 = M_2 - M_1 = 19{,}167\ \text{in.·lb.}$$

The maximum bending stress f_b is computed as

$$f_b = \frac{6M_3}{bt^2} = \frac{(6)(19{,}167\text{in}\cdot\text{lb})}{(1.5\text{in.})(2\text{in.})^2} = 19{,}167\ \text{psi}$$

The allowable stress for bending (F_b) is 23,760 psi (0.66 × F_y). Since f_a /F_a is less than 0.15, Equation (H1-3) in the Manual of Steel Construction, Chapter H, is used to evaluate combined stress:

$$\frac{f_a}{F_a} + \frac{f_b}{F_b} = \frac{3{,}650}{21{,}200} + \frac{19167}{23{,}760} = 0.98 < 1.0$$

Therefore, the pedestal is structurally adequate to support the weight of the heaviest loaded canister.

3.4.3.1.2 Standard Concrete Cask Bottom Support by Air Pads

The concrete cask is supported by air pads in each of 4 quadrants during transport. The layout of the air pads (four 60 in. × 60 in. or 48 in. × 48 in. square pads) are designed to clear the air inlet locations by approximately 3 in. to allow for hydraulic jack access.

The air pad system maximum height is 6.0 in. (3-in. maximum lift, plus 3.0-in. overall height when deflated). The air pad system has a rated lift capacity of 560,000 pounds for the 60 in. × 60 in. pads and 360,000 pounds for the 48 in. × 48 in. pads. The air pads must supply sufficient force to overcome the weight of the concrete cask under full load plus a lift load factor of 1.1. The weight of the heaviest storage configuration, the Standard BWR class 5 system, is about 314,000 pounds. The air pad evaluation uses a conservative weight of 320,000 pounds. The required lift load is 1.1 × (320,000 lb) = 352,000 pounds. Since the available lift force is greater than the load, the air pads are adequate to lift the concrete cask. Considering the minimum air pad capacity of 360,000 pounds, the lifting force margin of safety is:

$$MS = (360{,}000 / 352{,}000) - 1 = +0.02.$$

3.4.3.1.3 Standard Concrete Cask Top Lift By Lifting Lugs

A set of four lifting lugs is provided at the top of the vertical concrete cask so that the cask, with a loaded transportable storage canister, may be lifted from the top end. Similar to the bottom lift, the BWR Class 5 configuration maximum weight is used in the analysis of the lifting lugs.

The steel components of the lifting lugs are analyzed in accordance with ANSI N14.6. The allowable stress for the load-bearing members is the lesser of $S_y/3$ or $S_u/5$. The development length of the rebar embedded in the concrete is analyzed in accordance with ACI-349.

Lifting Lug Axial Load

The maximum loaded concrete cask weight is 312,210 pounds. Assuming a 10% dynamic load factor, the load (P) on each lug is:

$$P = \frac{312{,}210(1.1)}{4} = 85{,}858 \text{ lb}$$

For the analysis, P is taken as 86,000 pounds. The lugs are evaluated for adequate strength under a uniform axial load in accordance with the method described in Section 9.3 of AFFDL-TR-69-42 [32].

The bearing stresses and loads for lug failure involving bearing, shear-tearout, and hoop tension are determined using an allowable load coefficient (K). Actual lug failures may involve more than one failure mode, but such interaction effects are accounted for in the value of K.

The allowable lug yield bearing stress (F_{bryL}) is:

$$F_{bryL} = K\frac{a}{D}\left(F_{ty}\right) \quad \text{(for e/D < 1.5)}$$

$$= 1.61\left(\frac{1.78}{4.063}\right)(60 \text{ ksi}) = 42.32 \text{ ksi}$$

where:

K = 1.61
a = 1.78 in.

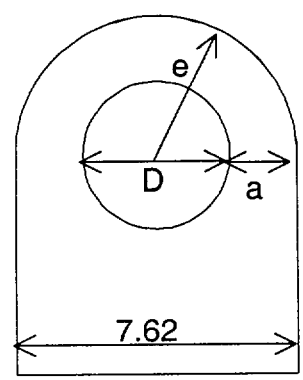

Lifting lug

$e = 3.81$ in.

$D = 4.063$ in.

$e/D = 3.81/4.063 = 0.94 < 1.5$

F_{ty} = yield strength = 60.0 ksi for ASME SA537, Class 2 carbon steel

The allowable ultimate bearing load (P_{bruL}) for lug failure in bearing, shear-out, or hoop tension is:

$$P_{bruL} = 1.304 \times F_{bryL} \times D \times t \quad (\text{if } F_{tu} > 1.304\, F_{ty})$$
$$= 1.304(42.32\text{ksi})(4.063\text{ in.})(2.0\text{ in.})$$
$$= 448.44 \text{ kips}$$

where:

$$\frac{F_{tu}}{F_{ty}} = \frac{80 \text{ ksi}}{60 \text{ ksi}} = 1.33 > 1.304$$

$t = 2.0$ in. (lug thickness)

F_{tu} = ultimate tensile strength = 80.0 ksi for SA537, Class 2 carbon steel

The lug ultimate load capacity (448.44 kips) divided by the lug maximum load (86 kips) is:

$$FS_u = \frac{448.44}{86.0} = 5.2 > 5$$

Therefore, the design criterion of a minimum factor of safety (FS) of 5 on the basis of material ultimate strength is met.

$$P_{bryL} = (42.32 \text{ ksi})(4.063 \text{ in.})(2.0 \text{ in.}) = 346.33 \text{ kips}$$

The lug yield load capacity (346.33 kips) divided by the lug maximum load (86 kips) is:

$$FS_y = \frac{346.33}{86.0} = 4.03 > 3$$

Therefore, the design criterion of a minimum factor of safety (FS) of 3 on the basis of material yield strength is met.

The tensile stress (σ) in the net cross-sectional area is:

$$\sigma = \frac{P}{A} = \frac{86 \text{ kips}}{7.12 \text{ in.}^2} = 12.1 \text{ ksi}$$

where:

P = the load on each lug
A = the net cross sectional area ($2 \times a \times t = 7.12$ in.^{2})

The factor of safety based on material yield strength $(FS_y)_t$ is:

$$(FS_y)_t = \frac{S_y}{\sigma} = \frac{60 \text{ ksi}}{12.1 \text{ ksi}} = 4.96 > 3$$

Therefore, the design criterion of a minimum factor of safety (FS) of 3 on the basis of material yield strength is met.

The factor of safety based on material ultimate strength $(FS_u)_t$ is:

$$(FS_u)_t = \frac{S_u}{\sigma} = \frac{80 \text{ ksi}}{12.1 \text{ ksi}} = 6.61 > 5$$

Therefore, the design criterion of a minimum factor of safety (FS) of 5 on the basis of material ultimate strength is met.

Embedded Plate

The load path from the lugs through the embedded plate and to the embedded reinforcing steel is symmetrical, with the edges of the lifting lugs being very near the axial center line of the reinforcing steel. Therefore, no significant bending moments are introduced into the embedded plate. The embedded plate cross-sectional area is more than double that of the lugs; therefore, the tensile strength of the plate is adequate by inspection.

Reinforcing Steel

Each embedded plate has two lifting lugs, therefore, the load (P_{pl}) on each embedded plate is 2 × 88,000 lb or

$$P_{pl} = 176{,}000 \text{ lb.}$$

The required cross-sectional area of reinforcing steel (A_s) is:

$$A_s = \frac{P_{pl}}{S_y} = \frac{176{,}000 \text{ lb}}{75{,}000 \text{ psi}} = 2.35 \text{ in.}^2$$

Eight #11 reinforcing steel deformed bars are selected to anchor the embedded plate to the concrete cask concrete shell.

The cross-sectional area for each #11 bar is 1.155 in.^{2} [33]. Therefore, the total area (A_t) resisting the tensile load is:

$$A_t = 8 \times 1.155 \text{ in.}^2 = 9.24 \text{ in.}^2$$

The reinforcing steel actual cross-sectional area (9.24 in.^{2}) divided by the required cross-sectional area (2.35 in^2) is:

$$FS = \frac{9.24}{2.35} = 3.93 > 3$$

Therefore, the design criterion of a minimum factor of safety (FS) of 3 on the basis of material yield strength is met. With respect to the ultimate strength, the required cross-sectional area of reinforcing steel (A_{sy}) is:

$$A_{sy} = \frac{P_{pl}}{S_u} = \frac{176{,}000 \text{ lb}}{100{,}000 \text{ psi}} = 1.76 \text{ in}^2$$

The reinforcing steel actual cross-sectional area (9.24 in^2) divided by the required cross-sectional area (1.83 in^2) is:

$$FS = \frac{9.24}{1.76} = 5.25 > 5$$

Therefore, the design criterion of a minimum factor of safety of 5 based on the ultimate strength is met.

The development length (l_d) is the length of embedded reinforcing steel required to develop the design strength of the reinforcing steel at a critical section. The required reinforcing steel development length (l_d) for deformed bars in tension per ACI-318–95, Section 12.2.3 [34] is:

$$l_d = \frac{3}{40}\frac{f_y}{\sqrt{f_c'}}\frac{\alpha\beta\gamma\lambda}{\left(\frac{c+K_{tr}}{d_b}\right)}d_b = 50.16 \text{ in}$$

where

d_b = diameter of rebar = 1.41 in.

f_y = yield strength of the reinforcing steel = 75,000 psi

f_c' = concrete design strength = 4,000 psi

α = reinforcement location factor = 1.0

β = coating factor = 1.0

γ = reinforcement size factor = 1.0

λ = light-weight aggregate concrete factor = 1.0

c = spacing or cover dimension = 218.28-187.5-13.0-2.25-2.0 = 13.53 > 2.5 in
= 2.5 in

K_{tr} = transverse reinforcement index = 0 in

The actual length of the reinforcing steel is 185.5 inches, which is greater than the required length of 50.16 inches.

Evaluation of the Threaded Connection to the Embedded Plate

The shear area of the threads (A_n) is calculated as:

$$A_n = 3.1416 n L_e D_s \min\left[\frac{1}{2n} + 0.57735(D_s \min - E_n \max)\right] = 6.53 \text{ in}^2$$

where

n	=	6, threads per inch
L_e	=	2.0 in., but not less than bolt thread engagement length
	=	$\dfrac{2A_t}{3.1416K_n \max[0.5 + 0.57735n(E_s \min - K_n \max\}]}$
	=	1.0 in. (Use L_e = 2.0 in.)
$D_s$min	=	1.3544 in., minimum major diameter–external thread
$E_n$max	=	1.2771 in., maximum pitch diameter–internal thread
K_n max	=	1.225 in, maximum minor diameter- internal thread
E_s min	=	1.2563 in, minimum pitch diameter–external thread
A_t	=	1.155 in^2, tensile stress area

The shear stress, τ, in the bolt hole threads is calculated as:

$$\tau = \frac{P_{pl}}{A_n} = \frac{176{,}000 \text{ lb} / 8 \text{ bars}}{6.53 \text{ in}^2} = 3{,}370 \text{ psi}$$

The factor of safeties for the bar based on the yield and ultimate strengths (f_y = 75 ksi, f_u = 100 ksi) are:

$$(F.S.)_{yield} = \frac{0.6 f_y}{\text{shear stress}} = \frac{45{,}000 \text{ psi}}{3{,}370 \text{ psi}} = 13.35 \quad (> 3)$$

$$(F.S.)_{Ultimate} = \frac{0.5 f_y}{\text{shear stress}} = \frac{50{,}000 \text{ psi}}{3{,}370 \text{ psi}} = 14.84 \quad (> 5)$$

The factor of safeties for the embedded plate based on the yield and ultimate strengths (f_y = 75 ksi, f_u = 100 ksi) are:

$$(F.S.)_{yield} = \frac{0.6f_y}{\text{shear stress}} = \frac{36{,}000\text{ psi}}{3{,}370\text{ psi}} = 10.68 \quad (> 3)$$

$$(F.S.)_{Ultimate} = \frac{0.5f_y}{\text{shear stress}} = \frac{40{,}000\text{ psi}}{3{,}370\text{ psi}} = 11.87 \quad (> 5)$$

A minimum of 2.0 inches is threaded into the plate to ensure engagement.

Welds

The lifting lugs are welded to the embedded plate with full penetration welds developing the full strength of the attached lugs. The reinforcing steel is welded to the embedded plate with full penetration welds developing the full strength of the reinforcing steel, which has the same tensile yield strength as the embedded plate. Therefore, all welds are adequate by inspection.

Nelson Studs

During a top end lift, the weight of the canister and pedestal applies a tensile load to the Nelson studs. Using the BWR Class 5 configuration, 75,896 pound canister weight (77,000 pounds used in analysis), an ANSYS finite element model is used to obtain the maximum load on the Nelson studs. The model, shown below, represents an eighth of the pedestal. The weight of the canister is applied as a pressure load to the top of the 2-inch base plate. The load is reacted through the Nelson studs and gap elements between the pedestal and the concrete. Using a 10% dynamic load factor, the maximum load on a Nelson stud is 13,467 pounds.

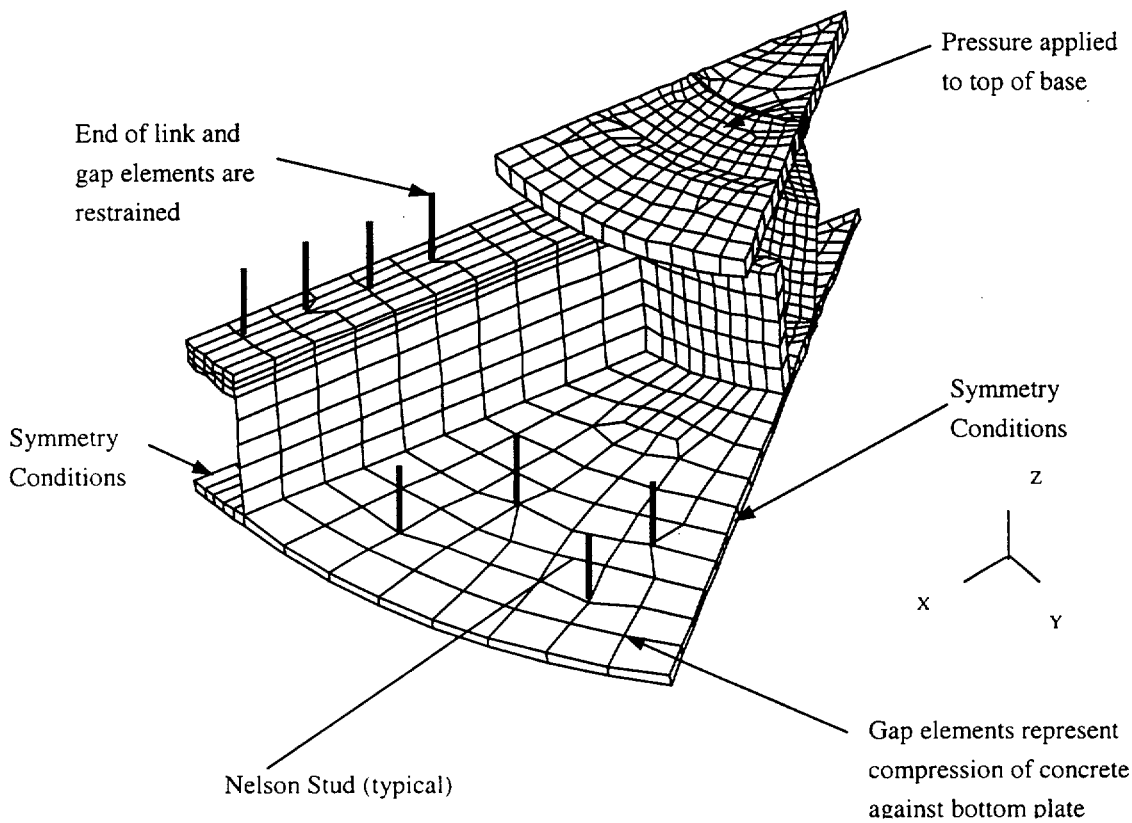

Pedestal Finite Element Model

In accordance with ACI 349-90 [34], the design pullout strength of the concrete (P_d) for any embedment is based on a uniform tensile stress acting on an effective stress area which is defined by the projected area of stress cones radiating toward the attachment from the bearing edge of the anchor heads. The effective area shall be limited by overlapping stress cones, by the intersection of the cones with concrete surfaces, by the bearing area of anchor heads, and by the overall thickness of the concrete. A 45°-inclination angle is used for the stress cones.

The maximum pullout strength of the concrete (P_d) is defined by the equation

$$P_d = 4 \times \phi \times \sqrt{f_c'} \times A_{cd}$$

where:

ϕ - strength reduction factor = 0.85

f_c' - concrete compression strength = 4,000 psi

A_{cp} - projected surface area of stress cones for Nelson studs

The maximum load occurs in the eight Nelson studs located on the top of the air inlet. A_{cp} for the eight Nelson studs equals 471.62 inch^2. Therefore, P_d equals:

$$P_d = 4 \times 0.85 \times \sqrt{4000} \times 471.62 = 101{,}415 \text{ lb.}$$

The total load on the eight Nelson studs is 27,378 pounds.

The margin of safety for the concrete is:

$$MS = \frac{101{,}415}{27{,}378} - 1 = +2.70$$

For a single stress cone, the maximum load is 13,467 pounds. The corresponding pull-out strength is 117.8 inch^2.

$$P_d = 4 \text{ x } 0.85 \text{ x } 117.8 \text{ x } \sqrt{4{,}000} = 25{,}331 \text{ lbs.}$$

where the projected surface area for a single stress cone (A_{cp}) of a single Nelson stud is 117.8.

The margin of safety for a single Nelson stud is:

$$MS = \frac{25{,}331}{13{,}467} - 1 = +0.88$$

Vertical Concrete Cask Pedestal

Using the same ANSYS Finite Element Model that was used for the Nelson Stud analysis, an analysis of the pedestal was performed. The maximum nodal stress intensity for the pedestal is 5,785 psi. From Tables 4.1-4 and 4.1-5, the maximum canister temperature is 376°F. For A36 steel, the allowable stress (S_m) is 19,300 psi. The margin of safety is, conservatively:

$$MS = \frac{19{,}300}{5{,}785} - 1 = 2.34$$

3.4.3.2 Standard Canister Lift

This section presents the lifting evaluation for the Standard Transportable Storage Canister (canister). The lifting evaluation for the Advanced canister is presented in Section 3.4.3.5.

The adequacy of the Standard canister lifting devices is demonstrated by evaluating the hoist rings, the canister structural lid, and the weld that joins the structural lid to the canister shell against the criteria in NUREG-0612 [8] and ANSI N14.6 [9]. The lifting configuration for the PWR and BWR canisters consists of six hoist rings threaded into the structural lid at equally spaced angular intervals. The hoist rings are analyzed as a redundant system with two three-legged lifting slings. For redundant lifting systems, ANSI N14.6 requires that load-bearing members be capable of lifting three times the load without exceeding the tensile yield strength of the material and five times the load without exceeding the ultimate tensile strength of the material. The canister lid is evaluated for lift conditions as a redundant system that demonstrates a factor of safety greater than three based on yield strength and a factor of safety greater than five based on ultimate strength. The canister lift analysis is based on a load of 76,000 lb, which bounds the weight of the heaviest loaded Standard canister configuration (See Tables 3.2-1 and 3.2-2), plus a dynamic load factor of 10%.

The canister lifting configuration is shown in the figure below, where: x is the distance from the canister centerline to the hoist ring center line (29.5 inches); F_y is the vertical component of force on the hoist ring; F_x is the horizontal component of force on the hoist ring; R is the sling length; and, F_R is the maximum allowable force on the hoist ring (30,000 lbs.). The angle θ is the angle from vertical to the sling. The vertical load, F_y, assuming a 10% dynamic load factor, is:

$$F_y = \frac{76{,}000 \text{ lbs x } 1.1}{3 \text{ lift points}} = 27{,}867 \text{ lbs}$$

The hoist rings are American Drill Bushing Company, Model 23200 Safety Engineered Hoist Rings, rated at 30,000 lbs., (or comparable ring from an alternative manufacture) with a safety factor of 5 on ultimate strength.

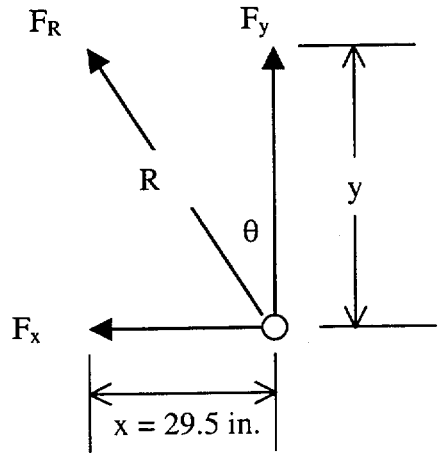

Calculating the maximum angle, θ, that will limit F_R to 30,000 lb:

$$\theta = \cos^{-1}\left(\frac{F_y}{F_R}\right) = \cos^{-1}\left(\frac{27{,}867}{30{,}000}\right) = 21.7 \text{ deg}$$

The minimum sling length, R, is

$$R = \frac{x}{\sin\theta} = \frac{29.5}{\sin 21.7^\circ} = 79.8 \text{ in.}$$

An 80-in. sling places the master link about 75 in. above the top of the canister (y = R cos θ = 80 cos 21.7° = 74.3 inches).

A minimum distance of 75 inches between the common lift point and the top of the canister is specified in Sections 8.1.2 and 8.2.

From the Machinery's Handbook [24], The shear area, A_n, in the structural lid bolt hole threads is calculated as

$$A_n = 3.1416\, n\, L_e\, D_s\min\left[\frac{1}{2n} + 0.57735\left(D_s\min - E_n\max\right)\right]$$

$$= 3.1416(4.5)(2.0 \text{ in.})(1.9751 \text{ in.})\left[\frac{1}{2(4.5)} + 0.57735(1.9751 \text{ in.} - 1.8681 \text{ in.})\right]$$

$$= 9.654 \text{ in}^2$$

where:

n	=	4.5 threads per in,
L_e	=	2.0-in. bolt thread engagement length
$D_s$min	=	1.9751 in., minimum major diameter of class 2A bolt threads
$E_n$max	=	1.8681 in., maximum pitch diameter of class 2B lid threads

The shear stress, τ, in the structural lid bolt hole threads is calculated as:

$$\tau = \frac{F_y}{A_n} = \frac{27{,}867 \text{ lb}}{9.654 \text{ in}^2} = 2{,}887 \text{ psi}$$

The canister structural lid is constructed of SA240, Type 304L stainless steel. Using shear allowables of 0.6 S_y and 0.5 S_u at a temperature of 300°F, the shear stress of 2,887 psi results in factors of safety of:

$$(F.S.)_y = \frac{0.6 \text{ x } 19{,}200 \text{ psi}}{2{,}887 \text{psi}} = 4.0 > 3$$

$$(F.S.)_u = \frac{0.5 \text{ x } 60{,}900 \text{ psi}}{2{,}887 \text{psi}} = 10.5 > 5$$

The criteria of NUREG-0612 and ANSI N14.6 for a redundant systems are met. Therefore, the 2.0-inch length of thread engagement is adequate.

The total weight of the heaviest loaded transfer cask (Class 5 BWR) is approximately 208,000 lbs. Three (3) times the design weight of the loaded canister is (3 × 76,000) 228,000 lbs, which is greater than the weight of the heaviest loaded transfer cask. Consequently, the preceding analysis bounds the inadvertently lifting of the transfer cask by the canister, since the canister lid and the hoist rings do not yield.

The structural adequacy of the canister structural lid and weld is evaluated using a finite element model of the upper portion of the canister. As shown in Figure 3.4.3.2-1, the model represents one-half of the upper section of the canister, including the structural and shield lids. The model uses gap/spring elements to simulate contact between adjacent components. Specifically, contact between the canister structural and shield lids is modeled using COMBIN40 combination elements in the axial (UY) degree of freedom. Simulation of the backing ring is accomplished using a ring of COMBIN40 gap/spring elements connecting the shield lid and the canister in the axial direction at the lid lower outside radius. CONTAC52 elements are used to model the interaction between the structural lid and canister shell and the shield lid and canister shell just below the respective lid weld joints. The size of the CONTAC52 gaps was determined from nominal dimensions of contacting components. The COMBIN40 elements used between the structural and shield lids, and for the backing ring, were assigned small gap sizes of 1×10^{-8} in. All gap/spring elements are assigned a stiffness of 1×10^{8} lb/in.

Boundary conditions were applied to enforce symmetry at the cut boundary of the model (in the x-y plane). All nodes on the x-y symmetry plane were restrained perpendicular to the symmetry plane (UZ). In addition, the nodes in the x-z plane at the bottom of the model were restrained in the axial direction (UY).

The lifting configuration for the canister consists of six hoist rings bolted to the structural lid at equally spaced angular intervals. To simulate the lifting of the canister, point loads equal to one-sixth of the total loaded canister weight plus a dynamic loading factor of 10% were applied to the model as forces at the lift locations while restraining the model at its base in the axial direction. Because of the symmetry conditions of the model, the forces applied to nodes on the symmetry plane were one-half of that applied at the other locations. The nodal point forces applied to the model as depicted in Figure 3.4.3.2-1 are calculated (including a dynamic load factor of 10%) as

$$W/6 = (76{,}000 \text{ lb} \times 1.1)/6 = 13{,}934 \text{ lb}$$

$$W/12 = (76{,}000 \text{ lb} \times 1.1)/12 = 6{,}967 \text{ lb}$$

The results of the finite element analysis of the canister for lift conditions are presented graphically in Figure 3.4.3.2-2. The maximum nodal stress intensity experienced by the various canister components during lift conditions are:

Standard Canister Component Description	Nodal Stress (psi)
Canister shell (inner surface of shell below structural weld at lifting location)	3,002
Structural Lid	2,825
Shield Lid	1,157
Structural Lid Weld	1,510
Shield Lid Weld	1,381

The canister shell and structural lid are constructed of SA240, Type 304L stainless. At a temperature of 300°F, the yield strength = 19,200 psi and the ultimate strength = 60,900 psi. The strength of the weld joint is taken as the same as the strength of the base material. Thus, when compared to the yield and ultimate strengths, the maximum nodal stress intensity of 3,002 psi produces the following factors of safety:

$$(\text{F.S.})_{\text{yield}} = \frac{\text{yield strength}}{\text{maximum nodal stress intensity}} = \frac{19{,}200\ \text{psi}}{3{,}002\ \text{psi}} = 6.4 \quad (> 6)$$

$$(\text{F.S.})_{\text{ultimate}} = \frac{\text{ultimate strength}}{\text{maximum nodal stress intensity}} = \frac{60{,}900\ \text{psi}}{3{,}002\ \text{psi}} = 20.3 \quad (> 10)\,.$$

The criteria of NUREG-0612 and ANSI N14.6 for nonredundant systems are met. Thus, the canister shell and structural lid are adequate.

Figure 3.4.3.2-1 Standard Canister Lift Finite Element Model

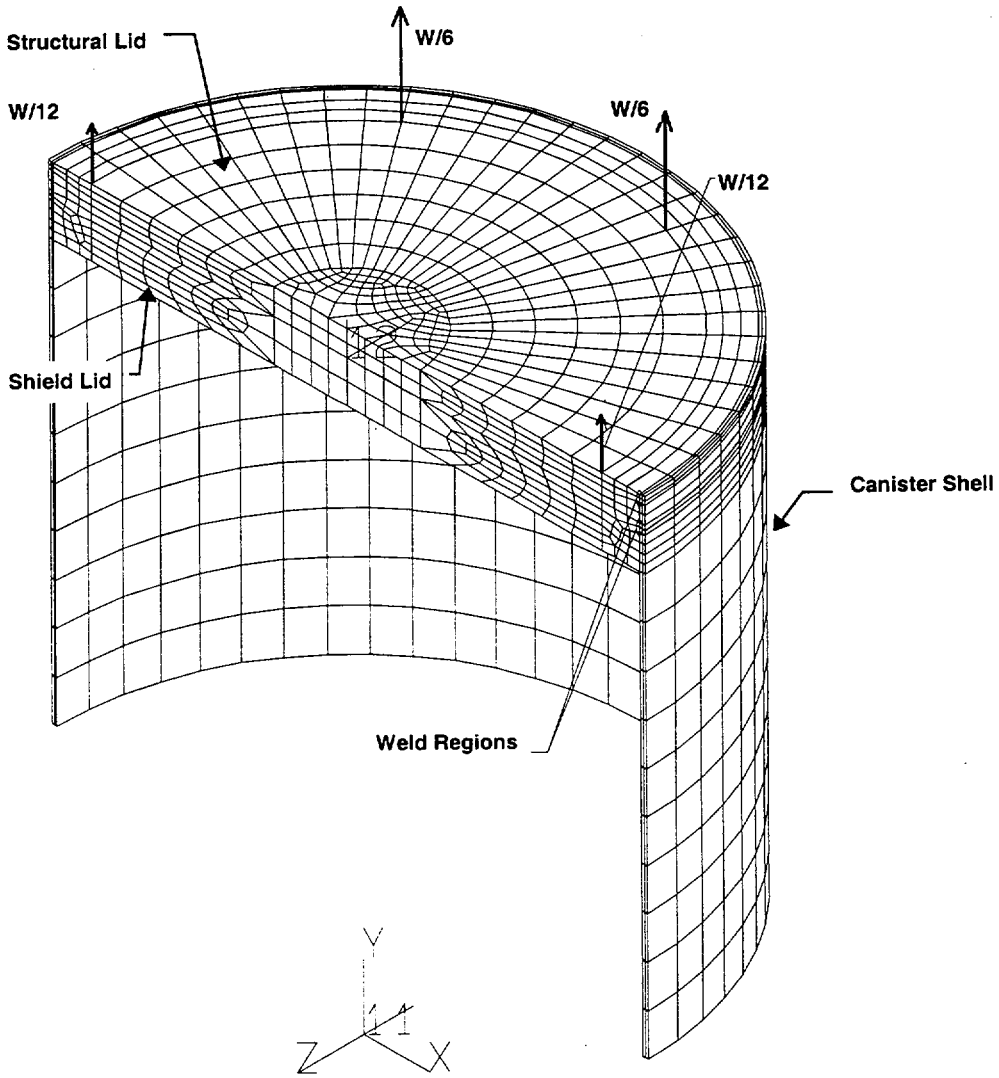

Figure 3.4.3.2-2 Standard Canister Lift Model Stress Intensity Contours (psi)

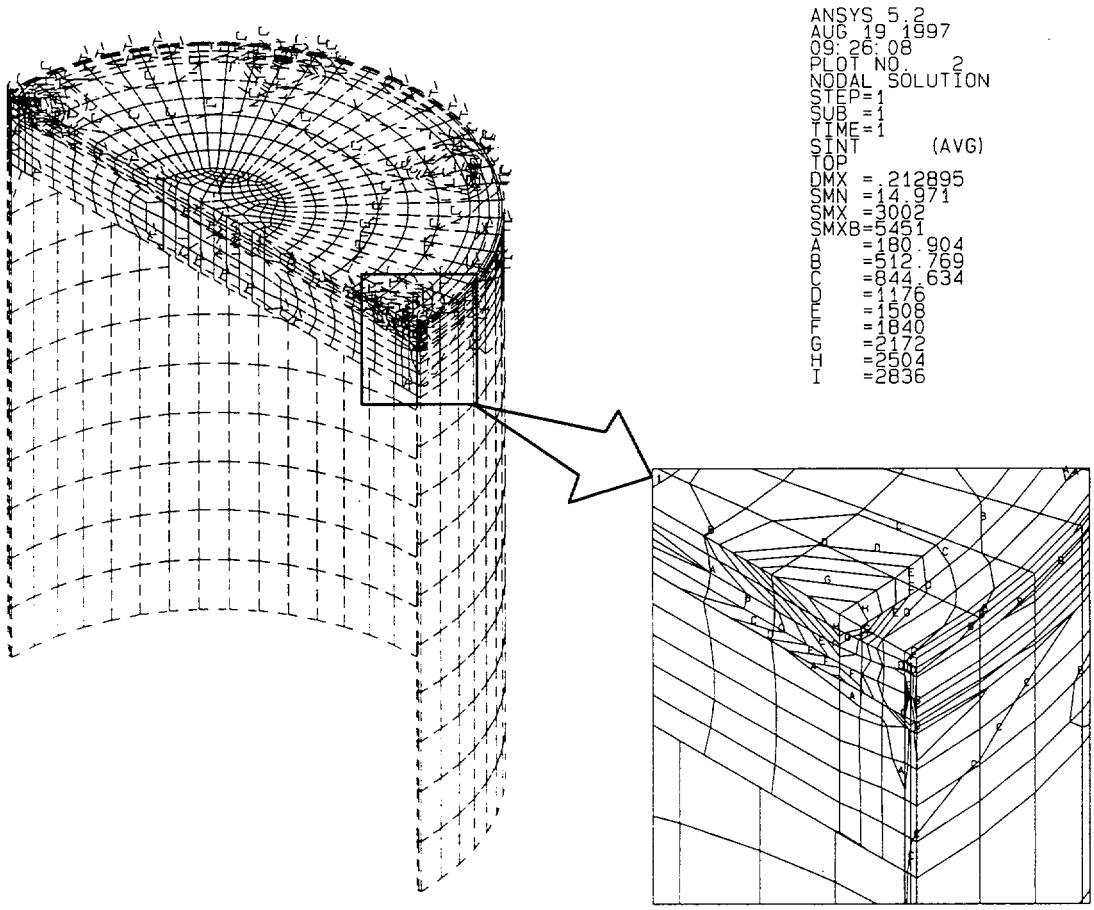

3.4.3.3 Standard Transfer Cask Lift

The evaluation of the Standard transfer cask presented here shows that the design meets NUREG-0612 [8] and ANSI N14.6 [9] requirements for nonredundant lift systems. The adequacy of the transfer cask is shown by evaluating the stress levels in all of the load-path components against the NUREG-0612 criteria. The evaluations of the Advanced and 100-ton transfer casks are presented in Sections 3.4.3.6 and 3.4.3.7, respectively.

3.4.3.3.1 Standard Transfer Cask Shell and Trunnion

The adequacy of the trunnions and the cask shell in the region around the trunnions during lifting conditions is evaluated in this section in accordance with NUREG-0612 and ANSI N14.6.

A three-dimensional finite element model is used to evaluate the lifting of a fully loaded transfer cask. Because of symmetry, it was necessary to model only one-quarter of the transfer cask, including the trunnions and the shells at the trunnion region. The lead and the NS-4-FR between the inner and outer shells of the transfer cask are neglected since they are not structural components. SOLID95 (20 noded brick element) and SHELL93 (8 noded shell element) elements are used to model the trunnion and shells, respectively. Due to the absence of rotation degrees of freedom for the SOLID95 elements, BEAM4 elements perpendicular to the shells are used at the interface of the trunnion and the shells to transfer moments from the SOLID95 elements to SHELL93 elements. The finite element model is shown in Figure 3.4.3.3-1.

The total weight of the heaviest loaded transfer cask (Class 5 BWR) is calculated at approximately 208,000 pounds. A conservative load of 210,000 lb., plus a 10% dynamic load factor, is used in the model. The load used in the quarter-symmetry model is $(210{,}000 \times 1.1)/4 = 57{,}750$ lb. The load is applied upward at the trunnion as a "surface load" whose location is determined by the lifting yoke dimensions. The model is restrained along two planes of symmetry with symmetry boundary conditions. Vertical restraints are applied to the bottom of the model to resist the force applied to the trunnion.

The maximum temperature in the transfer cask shell/trunnion region is conservatively evaluated as 300°F. For the ASTM A-588 shell material, the yield strength, S_y, is 45.6 ksi, and the ultimate strength, S_u, is 70 ksi. The trunnions are constructed of ASTM A-350 carbon steel, Grade LF2, with a yield stress of 31.9 ksi and an ultimate stress of 70 ksi. The standard impact test temperature for ASTM A-350, Grade LF2 is -50°F. The NDT temperature range is -70°F to -10°F for ASTM

A-588 with a thickness range of 0.625 in. to 3 in. [25]. Therefore, the minimum service temperature for the trunnion and shells is conservatively established as 0°F (50°F higher than the NDT test temperature, in accordance with Section 4.2.6 of ANSI N14.6 [9].

Table 3.4.3.3-1 through Table 3.4.3.3-4 provide summaries of the top 30 maximum stresses for both surfaces of the outer shell and inner shell (see Figure 3.4.3.3-2 and Figure 3.4.3.3-3 for node locations for the outer sell and inner shell, respectively). Stress contour plots for the outer shell are shown in Figure 3.4.3.3- and Figure 3.4.3.3-5. Stress contours for the inner shell are shown in Figure 3.4.3.3-6 and Figure 3.4.3.3-7. As shown in Table 3.4.3.3-1 through Table 3.4.3.3-4, all stresses, except local stresses, meet the NUREG-0612 and ANSI N14.6 criteria. That is, a factor of safety of 6 applies on material yield strength and 10 applies on material ultimate strength. The high local stresses, as defined in ASME Code Section III, Article NB-3213.10, which are relieved by slight local yielding, are not required to meet the 6 and 10 safety factor criteria [see Ref. 9, Section 4.2.1.2].

The localized stresses occur at the interfaces of the trunnion with the inner and outer shells. The size of the areas are less than 4.1 inches and 4.0 inches for the inner and outer shell, respectively. In accordance with ASME Code, Article NB-3213.10, the area of localized stresses cannot be larger than:

$$1.0\sqrt{Rt}$$

where:

R is the minimum midsurface radius
t is the minimum thickness in the region considered

Based on this formula, the size limitations for local stress regions are 5.1 inches (>4.06 inches) and 7.3 inches (>4.00 inches) for the inner and outer shells, respectively.

For the trunnion, the maximum tensile bending stress and average shear stresses occur at the interface with the outer shell. The linearized stresses through the trunnion are 3,377 psi in bending and 1,687 psi in shear. Comparing these stresses to the material allowable yield and ultimate strength (A350, Grade LF2), the factor of safety on yield strength is 9.4 (which is >6) and on ultimate strength is 20.7 (which is >10).

3.4.3.3.2 Retaining Ring and Bolts

The transfer cask uses a retaining ring bolted to the top flange to prevent inadvertent lifting of the canister out of the transfer cask, which could increase the radiation exposure to nearby workers. In the event that the loaded transfer cask is inadvertently lifted by attaching to the canister eyebolts instead of the transfer cask trunnions, the retaining ring and bolts have sufficient strength to support the weight of the heaviest transfer cask, plus a 10% dynamic load factor.

Retaining Ring

To qualify the retaining ring, the equations for annular rings are used (Roark [26], Table 24, Case 1e). The retaining ring is represented as shown in the sketch below. The following sketch assists in defining the variables used to calculate the stress in the retaining ring and bolts. The model assumes a uniform annular line load *w* applied at radius r_o.

The boundary conditions for the model are outer edge fixed, inner edge free with a uniform annular line load w at radius r_o.

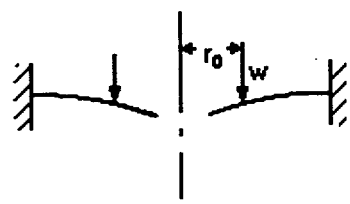

The material properties and parameters for the analysis are:

Plate dimensions:

thickness:
$t = 0.75$ in

outer radius (bolt circle):
$a = 37.28$ in

outer radius (outer edge)
$c = 38.52$ in

inner radius:
$b = 32.37$ in

Weight of bounding transfer cask:
$wt = 124{,}000 \text{ lb} \times 1.1$

Radial location of applied load:
$r_o = 33.53$ in

Material:
ASTM A588

Modulus of elasticity:
$E = 28.3 \times 10^6$ psi

Poisson's ratio:
$\nu = 0.31$

Number of bolts:
$Nb = 32$

Radial length of applied load:
$L_r = 2\pi r_o$
$L_r = 210.675$ in

Applied unit load:

$$w \equiv \frac{wt}{L_r}$$

$w = -647.44$ psi

The shear modulus is:

$$G = \frac{E}{2 \cdot (1 + v)}$$

$$G = 1.08 \times 10^7 \text{ psi}$$

D is a plate constant used in determining boundary values; it is also used in the general equations for deflection, slope, moment and shear. K_{sb} and K_{sro} are tangential shear constants used in determining the deflection due to shear:

$$D = \frac{E \cdot t^3}{12 \cdot (1 - v^2)}$$

$$D = 1.101 \times 10^6 \text{ lb-in}$$

Tangential shear constants, K_{sb} and K_{sro}, are used in determining the deflection due to shear:

$$K_{sb} = K_{sro} = -1.2 \cdot \frac{r_o}{a} \cdot \ln\left(\frac{a}{r_o}\right)$$

$$= -0.114$$

Radial moment M_{rb} and M_{ra} at points b and a (inner and outer radius, respectively) are:

M_{rb} (b,0) = 0 lb-in/in

M_{ra} (a,0) = 2207.86 lb-in/in

Transverse moment M_{tb} and M_{ta}, at points b and a (inner and outer radius, respectively) due to bending are:

M_{tb} (b,0) = -122.64 lb-in./in.

M_{ta} (a,0) = 684.44 lb-in./in.

The calculated shear stresses, τ_b and τ_a, at points b and a (inner and outer radius, respectively) are:

$\tau_b = 0$ psi

$$\tau_a = \frac{wt}{2\pi At}$$

$$\tau_a = -776.42 \text{ psi}$$

The calculated radial bending stresses, σ_{rb} and σ_{ra}, at points b and a (inner and outer radius) are:

$$\sigma_{r(i)} = \frac{6M_{r(i)}}{t^2}$$

$$\sigma_{rb} = 0 \text{ psi}$$

$$\sigma_{ra} = 23{,}550 \text{ psi}$$

The calculated transverse bending stresses, σ_{tb} and σ_{ta}, at points b and a (inner and outer radius) are:

$$\sigma_{t(i)} = \frac{6M_{t(i)}}{t^2}$$

$$\sigma_{tb} = -1308.2 \text{ psi}$$

$$\sigma_{ta} = 7{,}300.7 \text{ psi}$$

The principal stresses at the outer radius are:

$$\sigma_{1a} = 23{,}590 \text{ psi}$$

$$\sigma_{2a} = 7{,}263.6 \text{ psi}$$

$$\sigma_{3a} = 0 \text{ psi}$$

The stress intensity, SI_a, at the outer radius ($P_m + P_b$) is:

$$SI_a = \sigma_{1a} - \sigma_{3a}$$

$$SI_a = 23{,}590 \text{ psi}$$

The principal stresses at the inner radius are:

$$\sigma_{1b} = 0 \text{ psi}$$

$$\sigma_{2b} = -1308.2 \text{ psi}$$

$$\sigma_{3b} = 0 \text{ psi}$$

The stress intensity, SI_b, at the inner radius ($P_m + P_b$) is:

$$SI_b = \sigma_{1b} - \sigma_{2b}$$
$$SI_b = 1308.2 \text{ psi}$$

The maximum stress intensity occurs at the outer radius of the retaining ring. For the off-normal condition, the allowable stress intensity is equal to the lesser of 1.8 S_m and 1.5 S_y. For ASTM A588, the allowable stress intensity at 300°F is 1.8(23.3) = 41.94 ksi. The calculated stress of 23.59 ksi is less than the allowable stress intensity and the margin of safety is:

$$MS = \frac{41.94}{23.59} - 1 = 0.78$$

Retaining Ring / Canister Bearing

The bearing stress, S_{brg}, between the retaining ring and canister is calculated as:

Weight of Transfer Cask (TFR) = 124,000 × 1.1 = 136,400 lbs.
Area of contact between retaining ring and canister:

$$A = \pi\left(33.53^2 - 32.37^2\right) = 240 \text{ in}^2$$

$$S_{brg} = \frac{136{,}400}{240} = 568 \text{ psi}$$

Bearing stress allowable is S_y. For ASTM A588, the allowable stress at 300°F is 45.6 ksi. The calculated bearing stress is well below the allowable stress with a large margin of safety.

Shearing stress of Retaining Plate under the Bolt Heads

The shearing stress of the retaining plate under the bolt head is calculated as:

Outside diameter of bolt head d_b = 1.125 in.

Total shear area under bolt head $= \pi\,(1.125) \times 32 \times 0.75$

$= 84.82 \text{ in}^2$.

Shear stress of retaining plate, τ_p, under bolt head is:

$$\tau_p = \frac{136{,}400}{84.82} = 1608 \text{ psi}$$

Conservatively, the shear allowable for normal conditions is used.

$$\tau_{allowable} = (0.6)\,(S_m) = (0.6)\,(23.3 \text{ ksi}) = 13.98 \text{ ksi}$$

The Margin of Safety is: $\frac{13{,}980}{1{,}608} - 1 = +\text{large}$

Bolt Edge Distance

Using Table J3.5 "Minimum Edge Distance, in." of Section J3 from "Manual of Steel Construction Allowable Stress Design,"[23] the required saw-cut edge distance for a 0.75 inch bolt is 1.0 inch. As shown below, the edge distance for the bolts meets the criteria of the Steel Construction Manual.

$$\frac{77.04 - 74.56}{2} = 1.24 \text{ in} > 1.0 \text{ in}$$

Retaining Ring Bolts

The load on a single bolt, F_F, due to the reactive force caused by inadvertently lifting the canister, is:

$$F_F = \frac{wt}{N_b} = 4{,}262 \text{ lb}$$

where:

N_b = number of bolts, 32, and

wt = the weight of the cask, plus a 10% load factor, 124,000 lb × 1.1 = 136,400 lb.

The load on each bolt, F_M, due to the bending moment, is:

$$F_M = \left(\frac{2 \cdot \pi \cdot a}{N_b}\right) \cdot \left(\frac{\sigma \cdot t^2}{6 \cdot L}\right)$$

$$F_M = 12{,}929 \text{ lb}$$

where:

a = the outer radius of the bolt circle, 37.28 in.,

t = the thickness of the ring, 0.75 in.,

σ = the radial bending stress at point *a*, σ_{ra} = 23,550 psi, and

L = the distance between the bolt center line and ring outer edge, c - a = 1.25 in.

The total tension, F, on each bolt is:

$$F = F_F + F_M = 17{,}191 \text{ lb}$$

Knowing the bolt cross-sectional area, A_b, the bolt tensile stress is calculated as:

$$\sigma_t = \frac{F}{A_b} = 38{,}912 \text{ psi}$$

where:

$A_b = 0.4418 \text{ in}^2$

For off-normal conditions, the allowable primary membrane stress in a bolt is $2S_m$. The allowable stress for SA-193 Grade B6 bolts is 54 ksi at 120°F, the maximum temperature of the transfer cask top plate. The margin of safety for the bolts is

$$MS = \frac{54{,}000}{38{,}912} - 1 = +0.38$$

Since the SA-193 Grade B6 bolts have higher strength than the top plate, the shear stress in the threads of the top plate is evaluated. The yield and ultimate strengths for the top plate ASTM 588 material at a temperature of 120°F are:

S_y = 49.5 ksi

S_u = 70.0 ksi

From Reference 27, the shear area for the internal threads of the top plate, A_n , is calculated as:

$$A_n = 3.1416\, n\, L_e\, D_s\min\left[\frac{1}{2n} + 0.57735\left(D_s\min - E_n\max\right)\right] = 1.525 \text{ in}^2$$

where:

D = 0.7482 in., basic major diameter of bolt threads,
n = 10, number of bolt threads per inch,
$D_s\min$ = 0.7353 in., minimum major diameter of bolt threads,
$E_n\max$ = 0.6927 in., maximum pitch diameter of lid threads, and
L_e = 1.625-0.74=0.885 in., minimum thread engagement.

The shear stress (τ_n) in the top plate is:

$$\tau_n = \frac{F}{A_n} = \frac{17{,}191 \text{ lb}}{1.525 \text{ in}^2} = 11{,}273 \text{ psi}$$

Where the total tension, F, on each bolt is

$$F = F_F + F_M = 17{,}191 \text{ lb}$$

The shear allowable for normal conditions is conservatively used:

$$\tau_{allowable} = (0.6)\,(S_m) = (0.6)\,(23.3 \text{ ksi}) = 13.98 \text{ ksi}$$

The Margin of Safety is: $\frac{13{,}980}{11{,}273} - 1 = +0.24$

Therefore, the threads of the top plate will not fail in shear.

Bottom Plate Weld Analysis

The bottom plate is connected to the outer and inner shell of the transfer cask by full penetration welds. The weight of a loaded canister along with the shield door rail structure is transmitted from the bottom plate to the shell via the full penetration weld. For conservatism, only the length of the weld directly under the shell is considered effective in transmitting a load.

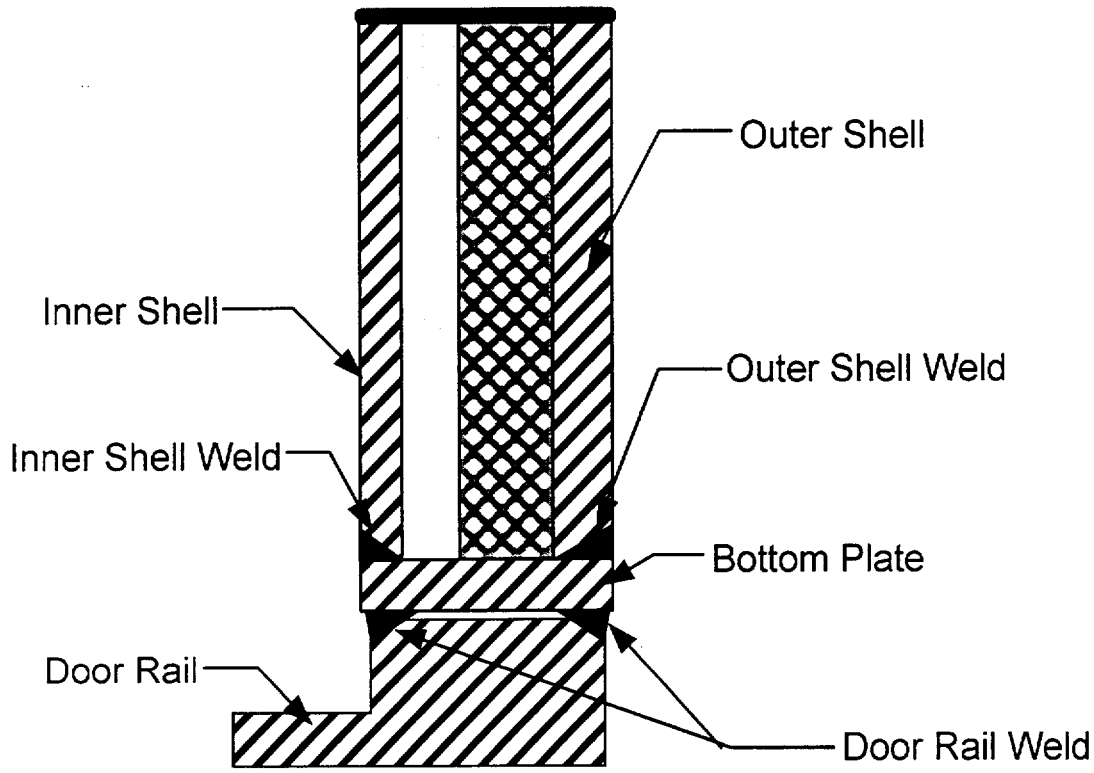

The weld connecting the outer and inner shell to the bottom plate has a length of approximately

l_w = (27.33 in. + 46.0 in.)/2 in. = 36.66 in.

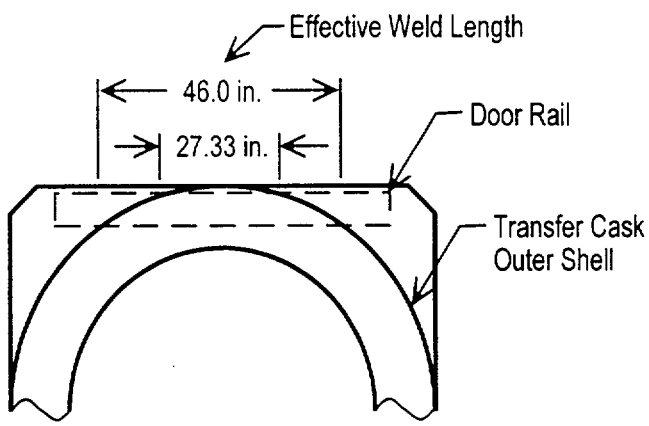

Stresses occurring in the outer shell to bottom plate weld are evaluated using a weight, W = 105,170 lb × 1.1 = 115,700 lb, which bounds the weight of the heaviest loaded canister, the weight of the water, and the weight of the shield doors and rails.

The door rail structure and canister load will be transmitted to both the inner and outer shell via full penetration welds. The thickness of the two shells and welds are different; however, for conservatism, this evaluation assumes both shell welds are 0.75 in. groove welds.

Weld effective area = (36.66 in.)(0.75 in. + 0.75 in.) = 54.99 in^2

$$\sigma_{axial} = \frac{P}{A} = \frac{(115{,}700 \text{ lb}) / (2)}{54.99 \text{ in}^2} = 1{,}052 \text{ psi}$$

For the bottom plate material (ASTM 588) at a bounding temperature of 400°F, the yield and ultimate stresses are:

S_y = 43.0 ksi

S_u = 70.0 ksi

$$FS_{yield} = \frac{43.0}{1.05} = +40.9 > 6$$

$$FS_{ultimate} = \frac{70.0}{1.05} = +66.5 > 10$$

Thus, the welds in the bottom plate meet the ANSI N14.6 and NUREG-0612 criteria for nonredundant systems.

3.4.3.3.3 Standard Transfer Cask Shield Door Rails and Welds

This section demonstrates the adequacy of the transfer cask shield doors, door rails, and welds in accordance with NUREG-0612 and ANSI N14.6, which require safety factors of 6 and 10 on material yield strength and ultimate strength, respectively, for nonredundant lift systems.

The shield door rails support the weight of a wet, fully loaded canister and the weight of the shield doors themselves. The shield doors are 9.0-in. thick plates that slide on the door rails. The rails are 9.38 in. deep × 6.5 in. thick and are welded to the bottom plate of the transfer cask. The doors and the rails are constructed of A-350, Grade LF 2 low alloy steel.

The design weight used in this evaluation, W = 100,019 × 1.1 ≈ 110,000 lb, includes the weight of the heaviest loaded canister, the weight of the water in the canister and in the annulus between the canister and transfer cask, and the weight of the shield doors. A 10% dynamic load factor is included to ensure that the evaluation bounds all normal operating conditions. This evaluation shows that the door rail structures, and welds are adequate to support a wet, fully loaded canister.

Allowable stresses for the material are taken at 400°F, which bounds the maximum temperature at the bottom of the transfer cask under normal conditions. The material properties of A-350 Grade LF 2 low alloy steel are provided in Table 3.3-9. The standard impact test temperature for ASTM A-350, Grade LF2 is -50°F. The NDT temperature range is -70°F to -10°F for ASTM A-588 with a thickness range of 0.625 in. to 3 in. [28]. Therefore, the minimum service temperature for the trunnion and shells is conservatively established as 0°F (50°F higher than the NDT test temperature, in accordance with Section 4.2.6 of ANSI N14.6 [9].

Stress Evaluation for Door Rail

Each rail is assumed to carry a uniformly distributed load equal to 0.5W. The shear stress in each door rail bottom plate due to the applied load, W, is:

$$\tau = \frac{W}{A} = \frac{110{,}000 \text{ lb}}{281.25 \text{ in}^2} = 391 \text{ psi}$$

where:

A = 2.5 in. × 56.25 in. length/rail × 2 rails = 281.25 in^2.

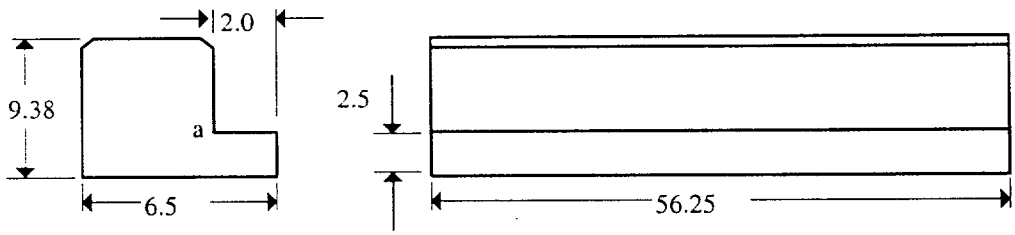

The bending stress in each rail bottom section due to the applied load of W is:

$$\sigma_b = \frac{M}{S} = \frac{65{,}450}{58.59} = 1{,}117 \text{ psi},$$

where:

$$M = \text{ moment at } a,$$

$$= \frac{W}{2} \times l = \frac{110{,}000 \text{ lb.}}{2} \times 1.19 \text{ in.}$$

$$= 64{,}450 \text{ in-lb},$$

and,

$$l = 2 - \frac{2-(0.18+0.19)}{2}$$

l = 1.19 in., applied load moment arm.

S, the section modulus = $\frac{56.25 \times 2.5^2}{6} = 58.59 \text{ in}^3$.

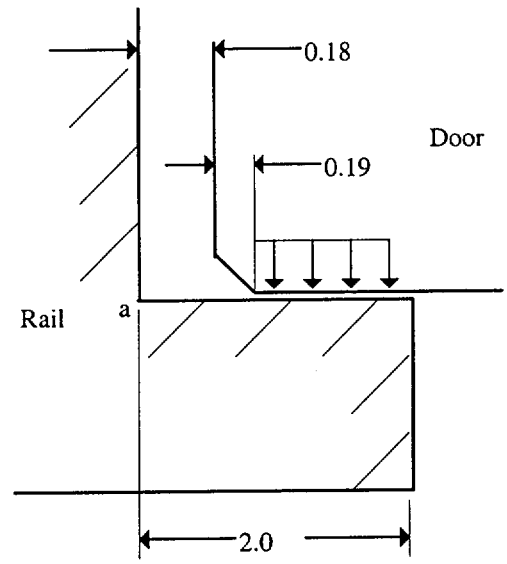

The maximum principal stress in the bottom section of the rail is:

$$\sigma = \left(\frac{\sigma_b}{2}\right) + \sqrt{\left(\frac{\sigma_b}{2}\right)^2 + \tau^2}$$

$$= 1{,}240 \text{ psi}$$

The acceptability of the rail design is evaluated by comparing the allowable stresses to the maximum calculated stresses, considering the safety factors of NUREG-0612 and ANSI N14.6. For the yield strength criteria,

$$\frac{30{,}800 \text{ psi}}{1{,}240 \text{ psi}} = 24.8 > 6$$

For the ultimate strength criteria,

$$\frac{70{,}000 \text{ psi}}{1{,}240 \text{ psi}} = 56.5 > 10$$

The safety factors meet the criteria of NUREG-0612. Therefore, the rails are structurally adequate.

Stress Evaluation for the Shield Doors

The shield doors consist of a layer of NS-4-FR neutron shielding material sandwiched between low alloy steel plates (Note: steel bars are also welded on the edges of the doors so that the neutron shielding material is fully encapsulated). The door assemblies are 9 in. thick at the center and 6.75 in. thick at the edges, where they slide on the support rails. The stepped edges of the two door leaves are designed to interlock at the center and are, therefore, analyzed as a single plate that is simply supported on two sides.

The shear stress at the edge of the shield door where the door contacts the rail is:

$$\tau = \frac{W}{2 \times A_S} = \frac{110{,}000 \text{ lb}}{2 \times (49.2 \text{ in.} \times 4.75 \text{ in.})} = 235 \text{ psi}$$

where:

A = the total shear area, 4.75 in. thick × 49.2 in. long. Note that the effective thickness at the edge of the doors is taken as 4.75 in. because the neutron shield material and the cover plate are assumed to carry no shear load. The shear stress at the center of the doors approaches 0 psi.

The moment equation for the simply-supported beam with uniform loading is:

$$M = 55{,}000\, X - 1{,}541(X)(0.5\, X) = 55{,}000\, X - 771\, X^2$$

The maximum bending moment occurs at the center of the doors, X = 35.7 in. The bending moment at this point is:

$$M = 55{,}000 \text{ lb} \times (35.7 \text{ in.}) - 771 \text{ lb/in.} \times (35.7 \text{ in})^2$$
$$M = 9.81 \times 10^5 \text{ in.-lb.}$$

The maximum bending stress, σ_{max}, at the center of the doors, is

$$\sigma_{ax} = \frac{Mc}{I} = \frac{9.81\times10^5 \text{ in.–lb} \times 5.5 \text{ in.}}{2{,}378 \text{ in.}^4} = 2{,}269 \text{ psi.}$$

where:

$$c = \frac{h}{2} = \frac{7 \text{ in.}}{2} + 2 \text{ in.} = 5.5 \text{ in., and}$$

$$I = \frac{bh^3}{12} = \frac{83.2 \text{ in.}\times7^3 \text{ in}}{12} = 2378 \text{ in}^4.$$

The acceptability of the door design is evaluated by comparing the allowable stresses to the maximum calculated stresses. As shown above, the maximum stress occurs for bending.

For the yield strength criteria,

$$\frac{30{,}800 \text{ psi}}{2{,}269 \text{ psi}} = 13.6 > 6$$

For the ultimate strength criteria,

$$\frac{70{,}000 \text{ psi}}{2{,}269 \text{ psi}} = 30.9 > 10$$

The safety factors satisfy the criteria of NUREG-0612. Therefore, the doors are structurally adequate.

Door Rail Weld Evaluation

The door rails are attached to the bottom of the transfer cask by 0.75-in. partial penetration bevel groove welds that extend the full length of the inside and outside of each rail. If the load is conservatively assumed to act at a point on the inside edge of the rail, the load, P, on each rail is,

$$P = \frac{W}{2} = \frac{110{,}000 \text{ lb}}{2} = 55{,}000 \text{ lb.}$$

Summing moments about the inner weld location:

$$0 = P \times a - F_o \times (b) = 55{,}000 \text{ lb} \times 1.19 \text{ in.} - F_o\,(4.5 \text{ in.}), \text{ or}$$

$$F_o = 14{,}544 \text{ lb}$$

Summing forces:

$$F_i = F_o + P = 14{,}544 \text{ lb} + 55{,}000 \text{ lb} = 69{,}544 \text{ lb}$$

The effective area of the inner weld is $0.75 \text{ in.} \times 56.25 \text{ in. long} = 42.19 \text{ in}^2$

The shear stress, τ, in the inner weld is

$$\tau = \frac{69{,}544 \text{ lb}}{42.19 \text{ in}^2} = 1{,}648 \text{ psi}$$

The factors of safety are

$$\frac{30{,}800 \text{ psi}}{1{,}648 \text{ psi}} = 18.7 > 6 \qquad \text{(For yield strength criteria)}$$

$$\frac{70{,}000 \text{ psi}}{1{,}648 \text{ psi}} = 42.4 > 10 \qquad \text{(For ultimate strength criteria)}$$

The safety factors meet the criteria of NUREG-0612. Thus, the rail attachment weld is adequate.

3.4.3.3.4 PWR Class 1 Standard Transfer Cask with Transfer Cask Extension

The PWR Class 1 Transfer Cask, baseline weight of 110,821 lb. empty, can be equipped with a Transfer Cask extension to accommodate the loading of a PWR Class 2 canister. The purpose of the extended Transfer Cask configuration is to permit the loading of PWR Class 1 fuel assemblies with Control Element Assemblies inserted into a PWR Class 2 canister; the length of the control element assemblies requires the use of the longer PWR Class 2 canister. The weight

of the Transfer Cask extension is 5,421 pounds. Therefore the total weight of the PWR Class 1 Transfer Cask extension would be:

$$W_{TC} = 110{,}821 + 5{,}421 = 116{,}242 \text{ lbs.}$$

Transfer Cask Shell and Trunnion

From the analysis in Section 3.4.3.3.1 for the Transfer Cask Shell and Trunnion, the heaviest loaded transfer cask weight used in the analysis was 210,000 pounds (Class 5 BWR). The total weight of the loaded transfer cask is:

$$W_{TC\text{-}L} = 191{,}492 + 5{,}421 = 196{,}913 \text{ lbs}$$

where:

191,492 lbs = the weight of a PWR Class 1 Transfer Cask and Canister (with fuel, water, and shield lid)

The Class 5 BWR Transfer Cask configuration bounds the PWR Class 1 Transfer Cask with extension; therefore, no additional handling analysis is required for the transfer cask shell and trunnions.

Retaining Ring and Bolts

From Section 3.4.3.3.2, the bounding transfer cask weight used was 124,000 pounds. As stated above, the weight of the PWR Class 1 Transfer Cask with extension is 116,242 pounds; therefore, the existing analysis in Section 3.4.3.3.2 bounds the PWR Class 1 Transfer Cask with extension and no additional analysis is required.

Transfer Cask Extension Attachment Bolts

The transfer cask extension is attached to the transfer cask by 32 bolts that are identical to the Retaining Ring Bolts with the exception of bolt length. The retaining ring bolts are 2.25 inches long and the transfer cask extension attachment bolts are 9.0 inches long; the thread engagement lengths are identical. Since the transfer cask extension is 8.75 inches thick, the prying action is negligible for the transfer cask extension attachment bolts during an inadvertent lift of the transfer cask via the retaining ring during a canister handling operation. The PWR Class 1 Transfer Cask with extension weighs approximately 7,000 pound less than the bounding analysis weight; therefore, no additional analysis of the attachment bolts is required.

Figure 3.4.3.3-1 Finite Element Model for the Standard Transfer Cask Trunnion and Shells

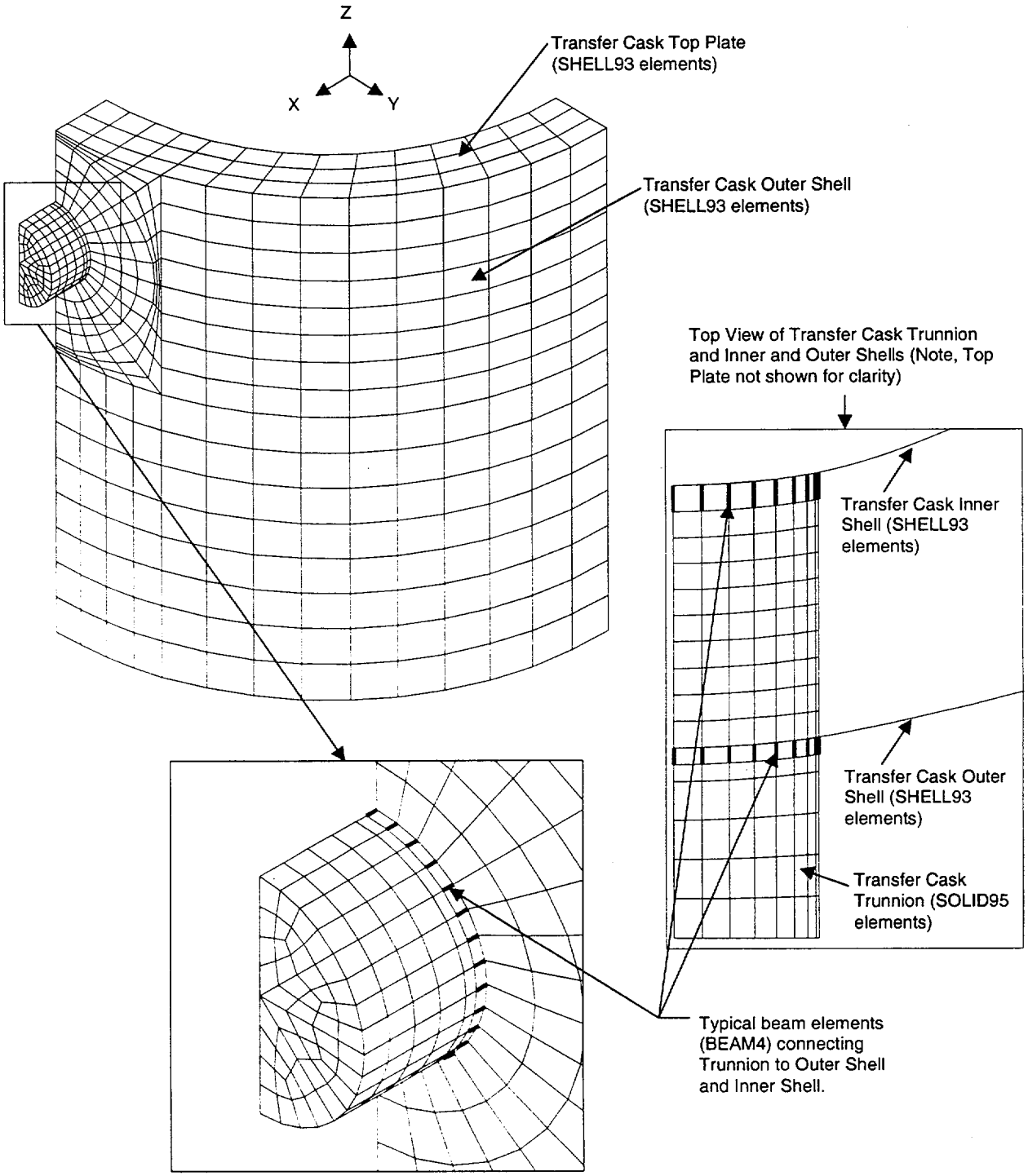

Figure 3.4.3.3-2 Node Locations for the Standard Transfer Cask Outer Shell Adjacent to Trunnion

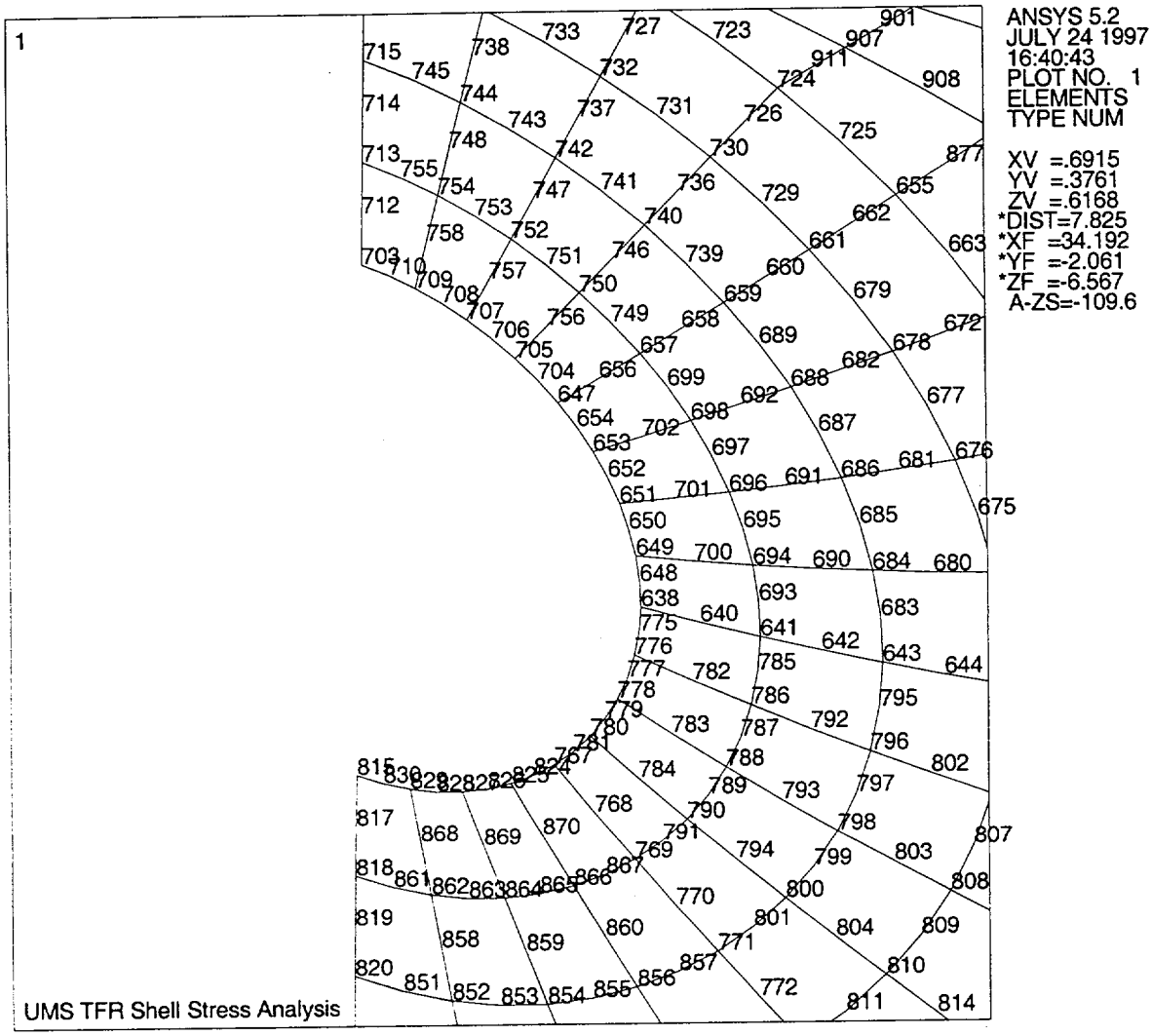

Figure 3.4.3.3-3 Node Locations for the Standard Transfer Cask Inner Shell Adjacent to Trunnion

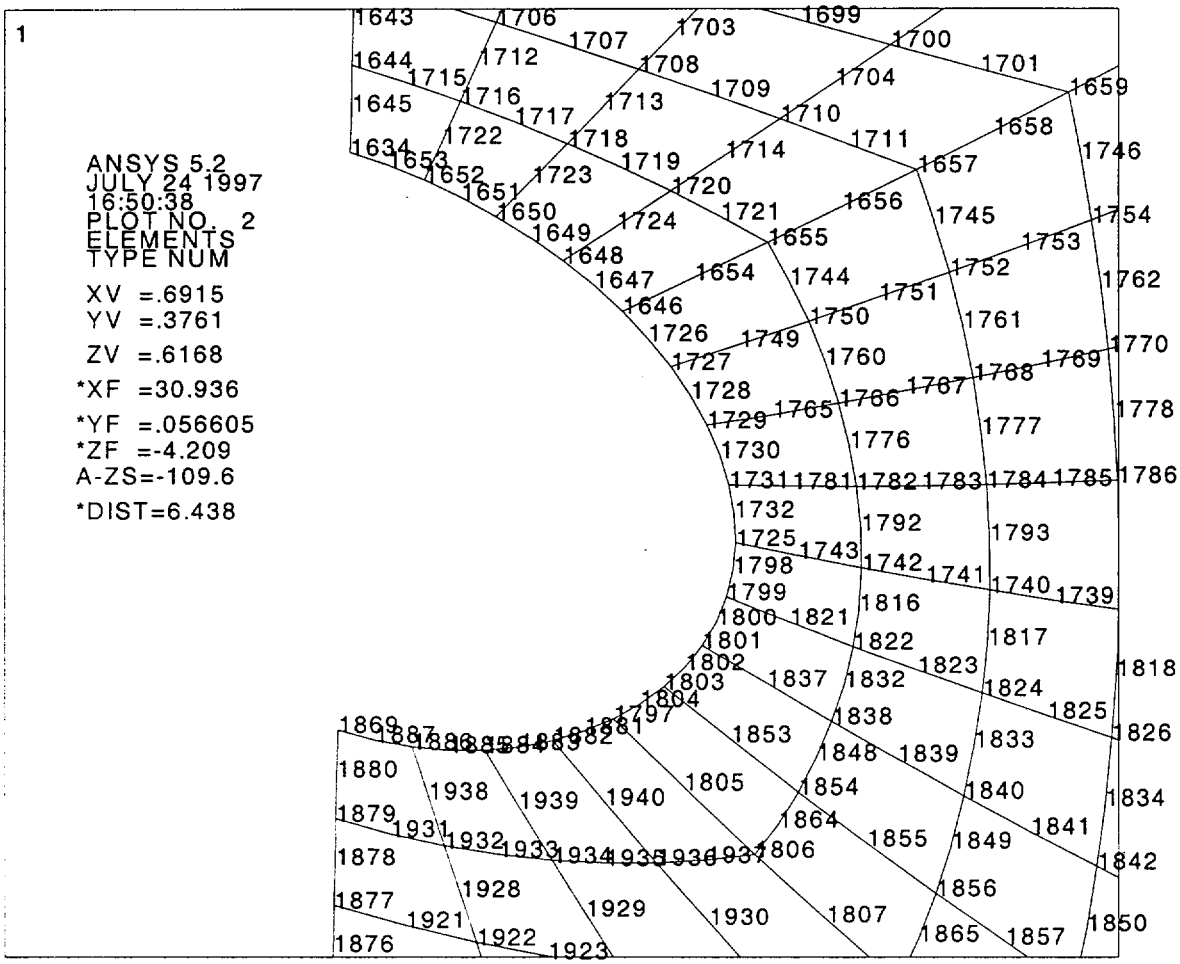

UMS TFR Shell Stress Analysis

Figure 3.4.3.3-4 Stress Intensity Contours (psi) for the Standard Transfer Cask Outer Shell Element Top Surface

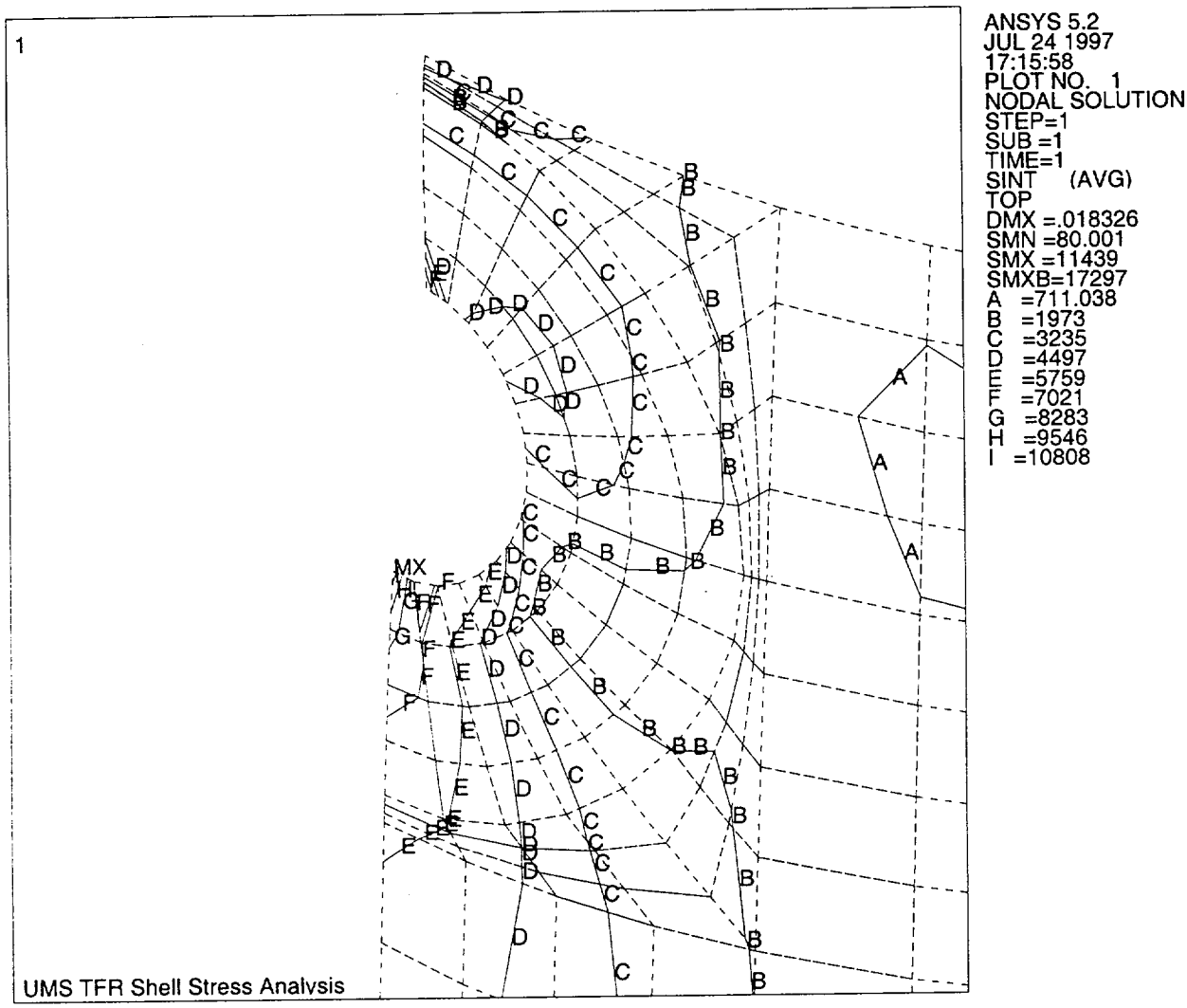

Figure 3.4.3.3-5 Stress Intensity Contours (psi) for the Standard Transfer Cask Outer Shell Element Bottom Surface

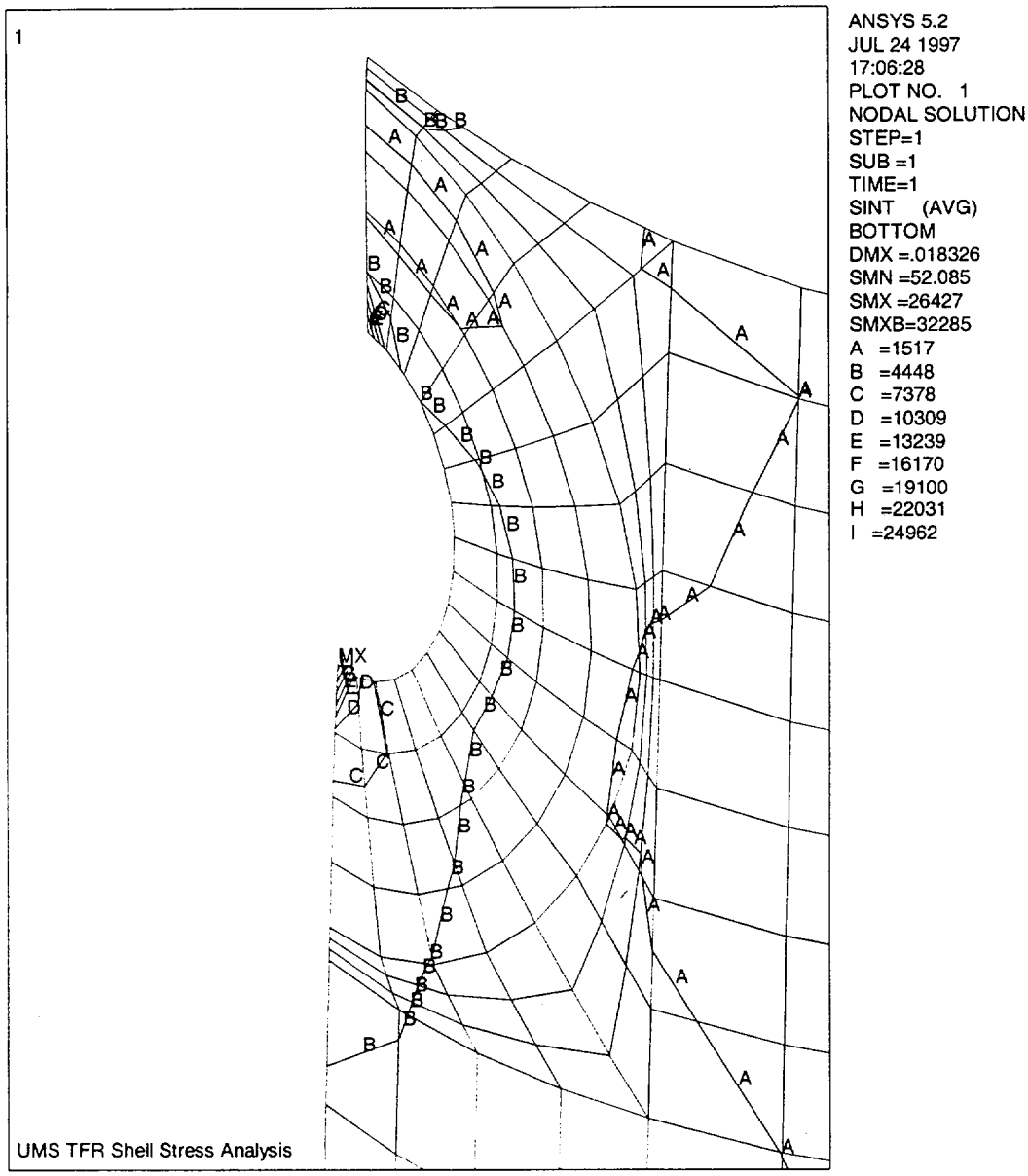

Figure 3.4.3.3-6 Stress Intensity Contours (psi) for the Standard Transfer Cask Inner Shell Element Top Surface

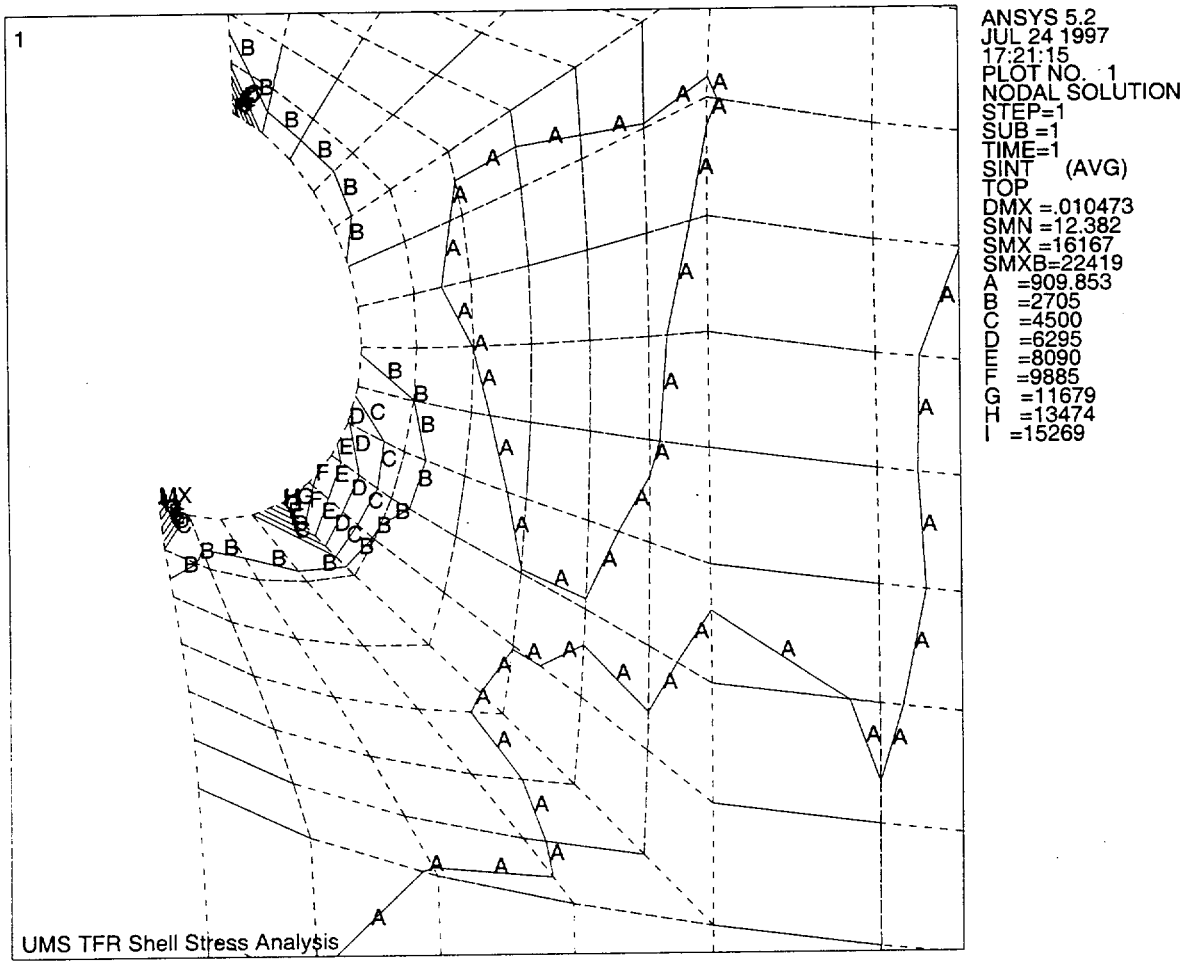

Figure 3.4.3.3-7 Stress Intensity Contours (psi) for the Standard Transfer Cask Inner Shell Element Bottom Surface

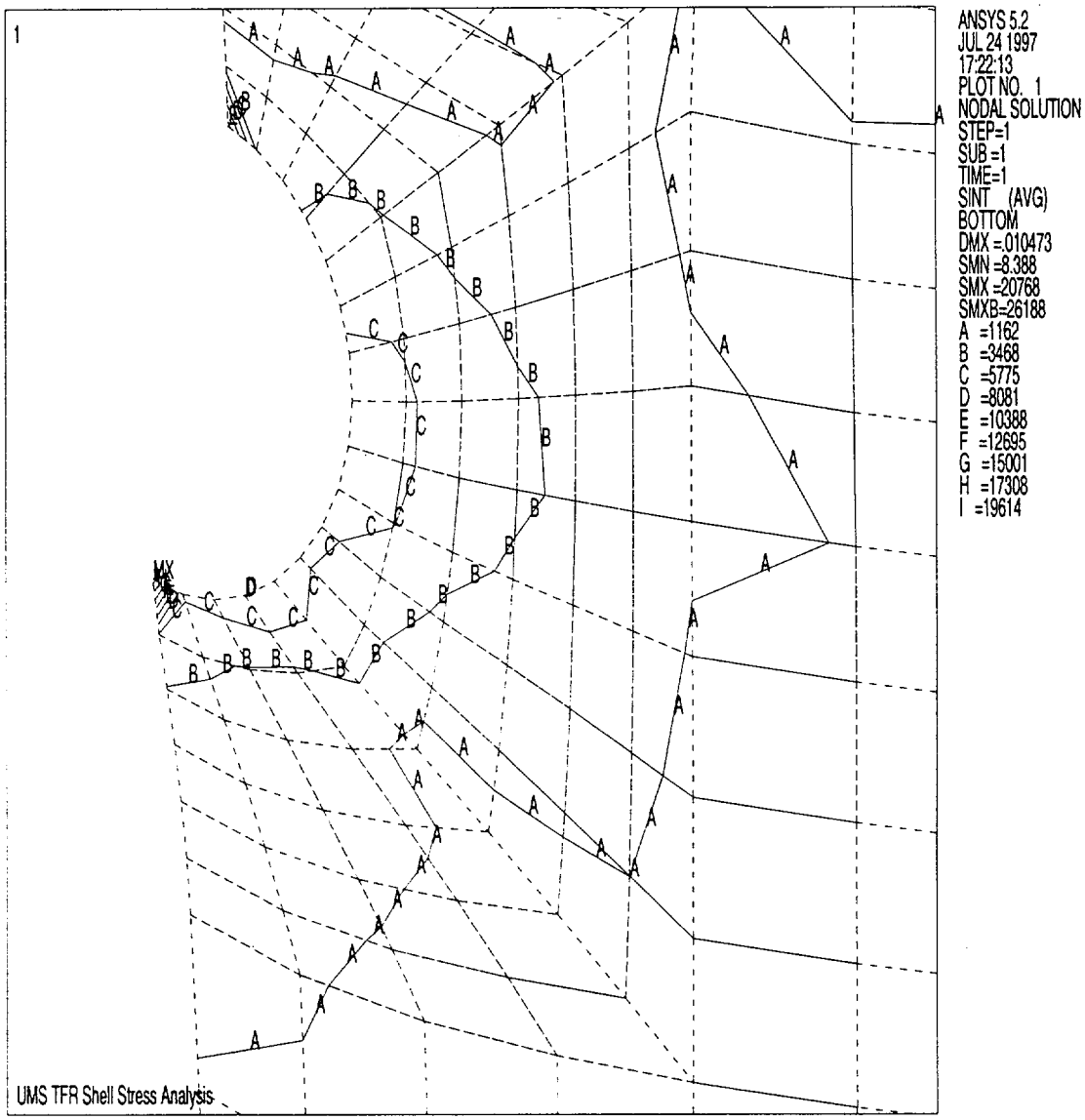

Table 3.4.3.3-1 Top 30 Stresses for the Standard Transfer Cask Outer Shell Element Top Surface

Node[1]	Principal Stresses(psi) S1	S2	S3	Nodal S.I. (psi)	F.S. on Yield S_y/S.I.[2]	F.S. on Ultimate (S_u/S.I.)[2]
815	3521.5	-288.8	-7917.2	11439.0	N/A[3]	N/A[3]
818	5092.6	-4.7	-3640.3	8732.9	N/A	N/A
703	7056.8	719.0	-995.8	8052.5	N/A	N/A
820	4315.2	-2.5	-3128.0	7443.2	N/A	N/A
862	4091.0	3.8	-3005.9	7096.9	N/A	N/A
827	4908.7	8.5	-2161.6	7070.3	N/A	N/A
825	4727.4	39.0	-2214.8	6942.2	6.6	10.1
852	4134.8	0.7	-2756.8	6891.6	6.6	10.2
822	3927.3	-0.3	-2788.6	6716.0	6.8	10.4
829	3525.9	-15.5	-3132.6	6658.6	6.8	10.5
767	4010.9	111.0	-2445.3	6456.2	7.1	10.8
842	3806.4	0.2	-2475.5	6281.9	7.3	11.1
816	3607.1	-0.1	-2644.0	6251.1	7.3	11.2
943	3547.6	-0.1	-2638.2	6185.8	7.4	11.3
941	3495.7	-0.1	-2626.5	6122.2	7.4	11.4
2	3430.3	0.0	-2609.0	6039.3	7.6	11.6
832	3497.2	0.2	-2341.5	5838.7	7.8	12.0
964	3412.4	0.3	-2271.0	5683.3	8.0	12.3
864	3625.6	15.6	-2002.0	5627.7	8.1	12.4
854	3683.9	3.6	-1853.7	5537.7	8.2	12.6
954	3335.5	0.3	-2199.9	5535.4	8.2	12.6
8	3251.5	0.1	-2132.4	5383.9	8.5	13.0
780	2941.0	173.8	-2411.8	5352.8	8.5	13.1
871	5250.1	2907.8	-23.4	5273.6	8.6	13.3
47	2848.5	0.0	-2367.8	5216.3	8.7	13.4
844	3470.2	2.3	-1701.8	5172.0	8.8	13.5
657	2272.2	-18.5	-2625.5	4897.7	9.3	14.3
57	2781.3	-0.3	-2093.2	4874.5	9.4	14.4
705	3143.0	-323.9	-1675.6	4818.6	9.5	14.5
834	3227.7	1.9	-1578.1	4805.7	9.5	14.6

Notes:

1. See Figure 3.4.3.3-2 for node locations.
2. S_y = 45,600 psi, S_u = 70,000 psi.
3. Local stresses that are relieved by local material yielding. Therefore, stress design factors of 6 and 10 on material yield and ultimate strength are not applicable (ANSI N14.6, Section 4.2.1.2).

Table 3.4.3.3-2 Top 30 Stresses for the Standard Transfer Cask Outer Shell Element Bottom Surface

Node[1]	Principal Stresses(psi) S1	S2	S3	Nodal S.I. (psi)	F.S. on Yield S_y/S.I.[2]	F.S. on Ultimate (S_u/S.I.)[2]
815	26042.0	1368.5	-385.3	26427.0	N/A[3]	N/A[3]
703	433.6	-1196.0	-16049.0	16482.0	N/A	N/A
829	11257.0	4762.2	-25.6	11283.0	N/A	N/A
818	9377.2	1335.4	-11.0	9388.2	N/A	N/A
862	8650.9	2600.4	-13.1	8663.9	N/A	N/A
638	3906.5	-37.6	-3390.4	7296.9	N/A	N/A
864	7245.0	2309.2	-13.3	7258.4	N/A	N/A
776	5054.5	156.6	-1993.6	7048.1	N/A	N/A
649	2372.4	-306.3	-4436.1	6808.5	6.7	10.3
827	6731.4	2737.4	-15.4	6746.9	6.8	10.4
820	6699.0	2463.6	-1.6	6700.6	6.8	10.4
778	5550.7	521.4	-837.7	6388.4	7.1	11.0
852	6375.9	2277.2	-3.5	6379.4	7.1	11.0
709	78.1	-4994.3	-6150.1	6228.2	7.3	11.2
825	6070.4	2367.2	-42.8	6113.2	7.5	11.5
651	1180.6	-998.2	-4879.3	6060.0	7.5	11.6
780	5703.3	1363.7	-312.2	6015.5	7.6	11.6
866	5998.4	1528.3	-1.7	6000.1	7.6	11.7
767	5772.1	2120.8	-131.9	5904.0	7.7	11.9
871	20.8	-416.7	-5855.7	5876.6	7.8	11.9
854	5737.9	1707.3	-4.5	5742.4	7.9	12.2
822	5656.1	1990.6	-0.3	5656.4	8.1	12.4
653	689.6	-2286.6	-4882.7	5572.3	8.2	12.6
842	5453.5	1832.8	-0.8	5454.3	8.4	12.8
873	20.0	-243.1	-5388.0	5408.0	8.4	12.9
769	5322.5	815.7	1.0	5321.5	8.6	13.2
641	3174.6	1.8	-1987.0	5161.6	8.8	13.6
786	3830.7	0.4	-1282.9	5113.5	8.9	13.7
694	2454.1	4.2	-2655.5	5109.6	8.9	13.7
816	5070.5	1851.7	-0.1	5070.6	9.0	13.8

Notes:

1. See Figure 3.4.3.3-2 for node locations.
2. S_y = 45,600 psi, S_u = 70,000 psi.
3. Local stresses that are relieved by local material yielding. Therefore, stress design factors of 6 and 10 on material yield and ultimate strength are not applicable (ANSI N14.6, Section 4.2.1.2).

Table 3.4.3.3-3 Top 30 Stresses for the Standard Transfer Cask Inner Shell Element Top Surface

Node[1]	Principal Stresses(psi)			Nodal S.I. (psi)	F.S. on Yield S_y/S.I.[2]	F.S. on Ultimate (S_u/S.I.)[2]
	S1	S2	S3			
1869	1765.2	-503.6	-14402.0	16167.0	N/A[3]	N/A[3]
1797	11044.0	-108.1	-2767.4	13811.0	N/A	N/A
1634	1615.7	-326.8	-12092.0	13708.0	N/A	N/A
1803	10114.0	3278.4	-293.2	10407.0	N/A	N/A
1801	8800.8	3432.8	-213.3	9014.1	N/A	N/A
1799	6238.1	3249.0	-161.2	6399.3	7.1	10.9
1882	728.3	-2351.9	-3701.0	4429.3	10.3	15.8
1633	4070.8	551.7	-1.6	4072.3	11.2	17.2
1879	350.0	-116.5	-3650.0	4000.0	11.4	17.5
1725	3690.7	2859.1	-166.8	3857.5	11.8	18.1
1648	485.8	-261.7	-3244.6	3730.5	12.2	18.8
1652	137.0	-1003.2	-3529.2	3666.2	12.4	19.1
1886	101.9	-2993.0	-3541.1	3643.1	12.5	19.2
1644	962.4	-24.8	-2674.1	3636.5	12.5	19.2
1650	433.9	11.7	-3137.7	3571.6	12.8	19.6
1884	416.6	-1841.5	-3125.6	3542.1	12.9	19.8
1666	3474.7	386.0	-0.3	3475.0	13.1	20.1
1822	3435.6	2108.1	-17.9	3453.6	13.2	20.3
1646	311.6	-945.1	-2960.5	3272.1	13.9	21.4
1838	3148.2	2452.5	-35.3	3183.5	14.3	22.0
1636	3157.0	750.3	-2.3	3159.3	14.4	22.2
1676	2879.2	707.8	-2.4	2881.6	15.8	24.3
1742	2725.1	1367.2	-8.9	2734.0	16.7	25.6
1727	308.8	-540.4	-2300.1	2608.9	17.5	26.8
1668	2486.6	121.0	-10.4	2496.9	18.3	28.0
1854	2393.3	2044.3	-55.4	2448.7	18.6	28.6
1731	2185.5	1530.9	-262.9	2448.4	18.6	28.6
1936	152.0	-126.5	-2235.5	2387.5	19.1	29.3
1638	2372.8	486.1	-2.7	2375.6	19.2	29.5
1120	4.2	-759.8	-2344.0	2348.2	19.4	29.8

Notes:

1. See Figure 3.4.3.3-3 for node locations.
2. S_y = 45,600 psi, S_u = 70,000 psi.
3. Local stresses that are relieved by local material yielding. Therefore, stress design factors of 6 and 10 on material yield and ultimate strength are not applicable (ANSI N14.6, Section 4.2.1.2).

Table 3.4.3.3-4 Top 30 Stresses for the Standard Transfer Cask Inner Shell Element Bottom Surface

Node[1]	Principal Stresses(psi) S1	S2	S3	Nodal S.I. (psi)	F.S. on Yield S_y/S.I.[2]	F.S. on Ultimate (S_u/S.I.)[2]
1869	18955.0	554.4	-1812.1	20768.0	N/A[3]	N/A[3]
1634	10094.0	530.6	-887.6	10982.0	N/A	N/A
1882	7550.5	886.3	-631.4	8181.8	N/A	N/A
1797	1147.8	143.2	-5927.0	7074.8	N/A	N/A
1731	2320.8	-75.8	-4368.2	6689.0	6.8	10.5
1884	6149.9	517.9	-483.4	6633.3	6.9	10.6
1725	1242.9	-392.2	-5118.9	6361.8	7.2	11.0
1729	3117.2	52.5	-3023.5	6140.7	7.4	11.4
1803	474.7	-3926.6	-5631.6	6106.3	7.5	11.5
1886	5973.5	2440.1	-81.0	6054.5	7.5	11.6
1801	457.4	-3130.0	-5557.0	6014.4	7.6	11.6
1742	1965.5	-0.9	-4026.8	5992.3	7.6	11.7
1782	2451.4	-0.2	-3512.8	5964.2	7.6	11.7
1799	543.1	-1622.2	-5294.3	5837.4	7.8	12.0
1822	1595.1	4.2	-4233.9	5829.0	7.8	12.0
1766	2666.8	-1.0	-2994.6	5661.4	8.1	12.4
1879	5157.5	127.0	-284.2	5441.6	8.4	12.9
1727	3646.3	282.8	-1615.2	5261.4	8.7	13.3
1838	1426.6	25.3	-3770.7	5197.3	8.8	13.5
1740	2367.5	-2.5	-2661.6	5029.1	9.1	13.9
1784	2285.8	-0.7	-2712.6	4998.4	9.1	14.0
1750	2342.2	-6.7	-2516.2	4858.4	9.4	14.4
1646	3727.5	676.6	-1129.4	4856.9	9.4	14.4
1806	3417.2	95.3	-827.4	4244.6	10.7	16.5
1824	2109.9	-2.3	-2106.6	4216.5	10.8	16.6
1768	1813.3	-0.4	-2337.6	4150.9	11.0	16.9
1854	1304.9	49.1	-2746.8	4051.6	11.3	17.3
1738	2231.7	1.0	-1617.9	3849.6	11.8	18.2
1786	1897.7	0.5	-1860.4	3758.2	12.1	18.6
1932	3722.3	1449.3	-8.2	3730.5	12.2	18.8

Notes:

1. See Figure 3.4.3.3-3 for node locations.
2. S_y = 45,600 psi, S_u = 70,000 psi.
3. Local stresses that are relieved by local material yielding. Therefore, stress design factors of 6 and 10 on material yield and ultimate strength are not applicable (ANSI N14.6, Section 4.2.1.2).

3.4.3.4 Advanced Vertical Concrete Cask Lift Evaluation

Lifting jacks installed at jacking points in the air inlet channels are used to raise the cask so that the air pads can be inserted under the cask. The lifting jacks use a synchronous lifting system to equally distribute the hydraulic pressure among four hydraulic jack cylinders. A weight of 335,000 pounds is used for the evaluation, which bounds the weight of the heaviest Advanced concrete cask. The lifting lugs are analyzed in accordance with ANSI N14.6 and ACI-349.

3.4.3.4.1 Advanced Bottom Lift by Hydraulic Jacks

To ensure that the concrete bearing stress at the jack locations due to lifting the cask does not exceed the allowable stress, the area of the surface needed to adequately spread the load is determined. The allowable bearing capacity of the concrete at each jack location is:

$$U_b = \phi f_c' A = \frac{(0.7)(4{,}000)\pi d^2}{4} = 2{,}199.1\ d^2,$$

where:

ϕ = 0.7 strength reduction factor for bearing,

f_c' = 4,000 psi concrete compressive strength,

$A = \frac{\pi d^2}{4}$, concrete bearing area (d = bearing area diameter).

The concrete bearing strength must be greater than the cask weight multiplied by a load reduction factor, $L_f = 1.4$.

$$2{,}199.1\ d^2 > \frac{L_f \times W}{n} = \frac{1.4(335{,}000\ \text{lb})}{4} \Rightarrow d > 7.3\ \text{in.},$$

where:

n = the number of jacks, 4

W = the weight of the vertical concrete cask, 335,000 lb.

L_f = the load factor, 1.4

The diameter obtained in the above equation corresponds to the minimum permissible area over which the load must be distributed. The force exerted by the jack is applied through the 2.25-in. thick steel air inlet top plate. This increases the effective diameter of the load acting on the

concrete surface from a 4.13-in. diameter jack cylinder to about 8.63 in., assuming a 45° angle for the cone of influence.

The bearing stress at each jack location with a bearing area of $\frac{\pi \times 8.63\ \text{in}^2}{4} \approx 58.4\ \text{in}^2$ is:

$$\sigma = \frac{P}{A} = \frac{(1.4)(335{,}000\ \text{lb})}{4(58.4\ \text{in}^2)} = 2{,}008\ \text{psi}$$

The allowable bearing stress is:

$$\sigma = \phi f_c = (0.7)(4{,}000\ \text{psi}) = 2{,}800\ \text{psi}$$

The Margin of Safety is:

$$MS = \frac{2{,}800}{2{,}008} - 1 = +0.39$$

Bottom Plate Flexure

During a bottom lift of the Advanced concrete cask, the weight of the loaded canister, the pedestal, and the air inlet system are transferred to the bottom plate. As the load is applied, the bottom plate flexes, tending to separate from the concrete. Nelson studs are used to tie the concrete to the bottom plate and prevent separation.

Thirty-two 3/4-inch diameter × 6 3/16-in. long Nelson studs are used in the concrete cask. The shear capacity of each stud is about 23.9 kips [21]. The total load capacity of the studs is:

$$\text{Capacity} = 32\ \text{studs} \times 23.86\ \text{kips/stud} = 763.5\ \text{kip.}$$

The allowable load, P_u, with a load factor of 2.0, as specified in the manufacturer's design data [21], is:

$$P_u = \frac{763.5\ \text{kip}}{2.0} = 381.8\ \text{kip}$$

The total calculated load applied to the concrete cask bottom plate is:

Loaded Canister + Pedestal Assembly = 95,000 + 11,000 = 106,000 lb

A bounding weight is used in the evaluation for the loaded canister, which exceeds the weights shown in Table 3.2-3.

The total load applied to the storage cask bottom plate (including a 10% dynamic load factor) is:

$$106{,}000 \times 1.1 = 116{,}600 \text{ lb}$$

Therefore, the margin of safety is:

$$MS = \frac{381.8 \text{ kip}}{116.6 \text{ kip}} - 1 = +2.3$$

Advanced Concrete Cask Base Weldment Evaluation

This analysis evaluates a bounding configuration of the pedestal support structure for static loads. The analysis conservatively assumes a loaded canister with a bounding weight of 95,000 pounds. The pedestal assembly weight is 11,000 pounds. The base plate is modeled with a thickness of 2 inches. The baffle is 1/4-inch thick and the stand is 2 inches thick. To bound the maximum pedestal weight, the densities of the base plate and baffle are increased to simulate a 4-inch plate and 2-inch plate, respectively.

A half-symmetry model of the base weldment (pedestal) is built using the ANSYS preprocessor (see Figure 3.4.3.4-1). The model is constructed of 8-node brick elements (SOLID45). Symmetry conditions (UY=0) are applied along the plane of symmetry (X-Z plane). The total load is simulated by increasing the density of the base plate. The total pressure applied to the model is:

$$F = 95{,}000 \text{ lb} \times 1.1 \text{ g},$$

where, a 10% dynamic load factor is applied to account for handling loads.

To determine the baffle assembly's contribution to the support of the pedestal, gap elements (CONTAC52) are added between the upper truncated cone and the base plate. Two analyses are performed. The first assumes that a gap of 1/4 inch exists between the truncated cone and base plate. The second analysis assumes zero gap.

The table below provides a summary of maximum nodal stresses compared to the allowable stresses for SA-36 carbon steel. For conservatism, the nodal stress (membrane + bending) is compared to the membrane allowable (S_m).

Stress Location	Maximum Nodal Stress (psi)	Allowable, S_m (psi)	Margin of Safety
	1/4-inch Gap		
Pedestal Ring	10214.3	19300.0	0.89
Baffle	107.3	19300.0	>10
Base Plate	1021.4	19300.0	>10
	Zero Gap		
Pedestal Ring	8225.5	19300.0	1.35
Baffle	6283.0	19300.0	2.07
Base Plate	790.8	19300.0	>10

As shown in the table, the maximum nodal stress occurs in the pedestal ring when the gap is set to 1/4-inch and does not close. When the gap is set to zero, a portion of the load is distributed to the baffle. In all cases the maximum nodal stress is less than the allowable.

3.4.3.4.2 Advanced Concrete Cask Bottom Support by Air Pads

The concrete cask is supported by air pads in each of 4 quadrants during transfer. The layout of the air pads (four approximately 60 in. × 60 in. square air pads) are designed to clear the air inlet locations by approximately 4 in. to allow for hydraulic jack access.

The air pad system maximum height is 6.0 in. (3-in. maximum lift, plus 3.0-in. overall height when deflated). The air pad system has a rated lift capacity of 560,000 pounds. The air pads must supply sufficient force to overcome the weight of the concrete cask under full load plus a lift load factor of 1.1. The air pad evaluation uses a weight of 332,000 pounds, which conservatively bounds the maximum Advanced concrete cask loaded weight. The required lift load is 1.1 × (332,000 lb) = 365,200 lb. Since the available lift force is greater than the load, the air pads are adequate to lift the concrete cask, considering the limiting pad capacity of 560,000 lb., the lifting force margin of safety is:

$$MS = (560{,}000 / 365{,}200) - 1 = +0.53$$

3.4.3.4.3 Advanced Concrete Cask Top Lift by Lifting Lugs

A set of four lifting lugs is provided at the top of the Advanced concrete cask so that the cask, with a loaded transportable storage canister, may be lifted from the top end. A weight of 332,000 is used in the analysis of the lifting lugs, which bounds the weight of the heaviest Advanced concrete cask (327,900 lbs).

The steel components of the lifting lugs are analyzed in accordance with ANSI N14.6. The allowable stress for the load-bearing members is the lesser of $S_y/3$ or $S_u/5$. The development length of the rebar embedded in the concrete is analyzed in accordance with ACI-349.

Using a bounding weight of 332,000 pounds and assuming a 10% dynamic load factor, the load (P) on each lug is:

$$P = \frac{332{,}000(1.1)}{4} = 91{,}300 \text{ lb}$$

The lugs are evaluated for adequate strength under a uniform axial load in accordance with the method described in Section 9.3 of AFFDL-TR-69-42 [32].

The bearing stresses and loads for lug failure involving bearing, shear-tearout, and hoop tension are determined using an allowable load coefficient (K). Actual lug failures may involve more than one failure mode, but such interaction effects are accounted for in the value of K.

The allowable lug yield bearing stress (F_{bryL}) is:

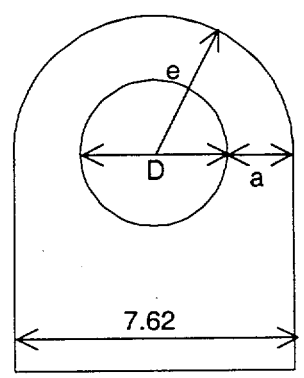

$$F_{bryL} = K\frac{a}{D}\left(F_{ty}\right) \quad \text{(for e/D < 1.5)}$$

$$= 1.61\left(\frac{1.78}{4.063}\right)(60 \text{ ksi}) = 42.32 \text{ ksi}$$

where:

K = 1.61
a = 1.78 in.
e = 3.81 in.
D = 4.063 in.
e/D = 3.81/4.063 = 0.94 < 1.5
F_{ty} = yield strength = 60.0 ksi for ASME SA537, Class 2 carbon steel

The allowable ultimate bearing load (P_{bruL}) for lug failure in bearing, shear-out, or hoop tension is:

$$P_{bruL} = 1.304 \times F_{bryL} \times D \times t \quad (\text{if } F_{tu} > 1.304\ F_{ty})$$

$$= 1.304(42.32\ \text{ksi})(4.063\ \text{in.})(2.25\ \text{in.}) = 504.5\ \text{kips.}$$

Where

$$\frac{F_{tu}}{F_{ty}} = \frac{80\ \text{ksi}}{60\ \text{ksi}} = 1.33 > 1.304$$

t = 2.25 in. (lug thickness)

F_{tu} = lug ultimate tensile strength, 80.0 ksi

The lug ultimate load capacity (504.5 kips) divided by the lug maximum load (91.3 kips) is:

$$FS_u = \frac{504.5}{91.3} = 5.53 > 5$$

Therefore, the design criterion of a minimum factor of safety (FS) of 5 on the basis of material ultimate strength is met.

$$P_{bryL} = (42.32\ \text{ksi})(4.063\ \text{in.})(2.25\ \text{in.}) = 386.9\ \text{kips}$$

The lug yield load capacity (386.9 kips) divided by the lug maximum load (91.3 kips) is:

$$FS_y = \frac{386.9}{91.3} = 4.24 > 3$$

Therefore, the design criterion of a minimum factor of safety (FS) of 3 on the basis of material yield strength is met.

The tensile stress (σ) in the net cross-sectional area is:

$$\sigma = \frac{P}{A} = \frac{91.3\ \text{kips}}{8.0\ \text{in.}^2} = 11.4\ \text{ksi}$$

where:

P = the load on each lug

A = the net cross-sectional area ($2 \times a \times t = 8.0\ \text{in}^2$)

The factor of safety based on material yield strength $(FS_y)_t$ is:

$$(FS_y)_t = \frac{S_y}{\sigma} = \frac{60\ \text{ksi}}{11.4\ \text{ksi}} = 5.26 > 3$$

Therefore, the design criterion of a minimum factor of safety (FS) of 3 on the basis of material yield strength is met.

The factor of safety based on material ultimate strength $(FS_u)_t$ is:

$$(FS_u)_t = \frac{S_u}{\sigma} = \frac{80\ \text{ksi}}{11.4\ \text{ksi}} = 7.02 > 5$$

Therefore, the design criterion of a minimum factor of safety (FS) of 5 on the basis of material ultimate strength is met.

Evaluation of the Embedded Plate and Reinforcing Steel

The load path from the lugs through the embedded plate and to the embedded reinforcing steel is symmetrical, with the edges of the lifting lugs being very near the axial centerline of the reinforcing steel. Therefore, no significant bending moments are introduced into the embedded plate. The embedded plate cross-sectional area is more than double that of the lugs; therefore, the tensile strength of the plate is adequate by inspection.

Each embedded plate has two lifting lugs, therefore, the load (P_{pl}) on each embedded plate is 2 × 91,300 lb or:

$$P_{pl} = 182{,}600\ \text{lb.}$$

The required cross-sectional area of reinforcing steel (A_s) is:

$$A = \frac{P_{pl}}{S_y} = \frac{182{,}600\ \text{lb}}{75{,}000\ \text{psi}} = 2.43\ \text{in}^2$$

Eight #11 reinforcing steel deformed bars are selected to anchor the embedded plate to the concrete cask concrete shell.

The tensile stress area for each #11 bar is 1.155 in^2 [33]. Therefore, the total area (A_t) resisting the tensile load is:

$$A_t = 8 \times 1.155 \text{ in}^2 = 9.24 \text{ in}^2$$

The reinforcing steel actual cross-sectional area (9.24 in^2) divided by the required cross-sectional area (2.43 in^2) is:

$$FS = \frac{9.24}{2.43} = 3.80 > 3$$

Therefore, the design criterion of a minimum factor of safety of 3 based on the yield strength is met. With respect to the ultimate strength, the required cross-sectional area of reinforcing steel (A_{sy}) is:

$$A = \frac{P_{pl}}{S_u} = \frac{182{,}600 \text{ lb}}{100{,}000 \text{ psi}} = 1.83 \text{ in}^2$$

The reinforcing steel actual cross-sectional area (9.24 in^2) divided by the required cross-sectional area (1.83 in^2) is:

$$FS = \frac{9.24}{1.83} = 5.05 > 5$$

Therefore, the design criterion of a minimum factor of safety of 5 based on the ultimate strength is met.

The development length (l_d) is the length of embedded reinforcing steel required to develop the design strength of the reinforcing steel at a critical section. The required reinforcing steel development length (l_d) for deformed bars in tension per ACI-318–95, Section 12.2.3 [34] is:

$$l_d = \frac{3}{40} \frac{f_y}{\sqrt{f_c'}} \frac{\alpha\beta\gamma\lambda}{\left(\frac{c + K_{tr}}{d_b}\right)} d_b = 70.73 \text{ in}$$

where

d_b = diameter of rebar = 1.41 in.

f_y = yield strength of the reinforcing steel = 75,000 psi

f_c' = concrete design strength = 4,000 psi

α = reinforcement location factor = 1.0

β = coating factor = 1.0

γ = reinforcement size factor = 1.0

λ = light-weight aggregate concrete factor = 1.0

c = spacing or cover dimension = 218.28-187.5-13.0-2.25-2.0 = 13.53 > 2.5 in

= 2.5 in

K_{tr} = transverse reinforcement index = 0 in

The actual length of the reinforcing steel is 187.5 inches, which is greater than the required length of 70.73 inches.

Evaluation of the Threaded Connection to the Embedded Plate

The shear area of the threads (A_n) is calculated as:

$$A_n = 3.1416 n L_e D_s \min\left[\frac{1}{2n} + 0.57735(D_s \min - E_n \max)\right] = 6.53 \text{ in}^2$$

where

n = 6, threads per inch

L_e = 2.0 in., but not less than bolt thread engagement length

$$= \frac{2A_t}{3.1416 K_n \max[0.5 + 0.57735n(E_s \min - K_n \max\}]}$$

= 1.0 in. (Use L_e = 2.0 in.)

$D_s$min = 1.3544 in., minimum major diameter–external thread

$E_n$max = 1.2771 in., maximum pitch diameter–internal thread

K_n max = 1.225 in, maximum minor diameter–internal thread

E_s min = 1.2563 in, minimum pitch diameter–external thread

A_t = 1.155 in^2, tensile stress area

The shear stress, τ, in the bolt hole threads is calculated as:

$$\tau = \frac{P_{pl}}{A_n} = \frac{182{,}600 \text{ lb} / 8 \text{ bars}}{6.53 \text{ in}^2} = 3{,}495 \text{ psi}$$

The factor of safeties for the bar based on the yield and ultimate strengths (f_y = 75 ksi, f_u = 100 ksi) are:

$$(F.S.)_{yield} = \frac{0.6f_y}{\text{shear stress}} = \frac{45{,}000\text{ psi}}{3{,}495\text{ psi}} = 12.88 \quad (>3)$$

$$(F.S.)_{Ultimate} = \frac{0.5f_y}{\text{shear stress}} = \frac{50{,}000\text{ psi}}{3{,}495\text{ psi}} = 14.31 \quad (>5)$$

The factor of safeties for the embedded plate based on the yield and ultimate strengths (f_y = 75 ksi, f_u = 100 ksi) are:

$$(F.S.)_{yield} = \frac{0.6f_y}{\text{shear stress}} = \frac{36{,}000\text{ psi}}{3{,}495\text{ psi}} = 10.30 \quad (>3)$$

$$(F.S.)_{Ultimate} = \frac{0.5f_y}{\text{shear stress}} = \frac{40{,}000\text{ psi}}{3{,}495\text{ psi}} = 11.44 \quad (>5)$$

A minimum of 2.0 inches is threaded into the plate to ensure engagement.

Evaluation of Lifting Lug Welds

The lifting lugs are welded to the embedded plate with full penetration welds developing the full strength of the attached lugs. The reinforcing steel is screwed or welded to the embedded plate with full penetration welds developing the full strength of the reinforcing steel, which has the same tensile yield strength as the embedded plate.

Therefore, all welds are adequate by inspection.

Evaluation of the Nelson Studs

During a top end lift, the weight of the canister and pedestal applies a tensile load to the Nelson studs. Using a bounding weight of 95,000 lbs for the canister and 11,000 lbs for the pedestal, an ANSYS finite element model is used to obtain the maximum load on the Nelson studs. The model, as follows, represents an eighth of the pedestal. The weight of the canister is applied as a pressure load to the top of the 4-inch base plate. The load is reacted through the Nelson studs

and gap elements between the pedestal and the concrete. Using a 10% dynamic load factor, the maximum load on a Nelson stud is approximately 18,300 pounds.

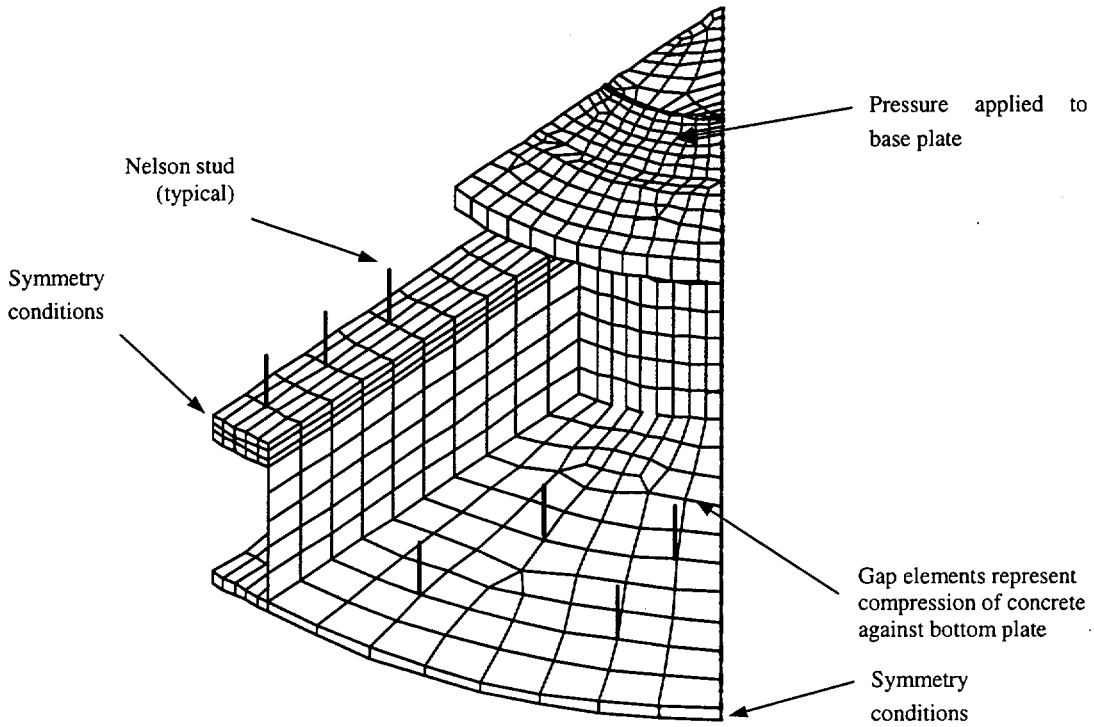

Per ACI 349-85 "Code Requirements for Nuclear Safety Related Concrete Structures," [4] the design pullout strength of the concrete (P_d) for any embedment is based on a uniform tensile stress acting on an effective stress area which is defined by the projected area of stress cones radiating toward the attachment from the bearing edge of the anchor heads. The effective area shall be limited by overlapping stress cones, by the intersection of the cones with concrete surfaces, by the bearing area of anchor heads, and by the overall thickness of the concrete. A 45° inclination angle defines the stress cones.

The concrete projected area of the 6 Nelson studs located on a concrete cask inlet duct is calculated by the method described in ACI 349-85. The projected area of a single Nelson stud is calculated by creating a cone that projects 45° from the head of the Nelson stud. The dimensions of the Nelson stud are:

Height = 6.00 inch

Diameter = 0.75 inch

Head Diam. = 1.25 inch

Head height = 0.50 inch

The effective length of the Nelson stud is 6.00 – 0.50 = 5.50 inch. The concrete projected area (A_{cp}) is conservatively taken at the bottom of the inlet cover plate. The radius (R) of the concrete projected area is calculated to be:

R = stud length + plate thickness + stud head radius
= 5.50 + 2.25 + 0.625 = 8.375 in.

To calculate the total projected area (A_{cp}) of the 6-Nelson studs on the inlet duct, the net area of the intersecting projected areas is calculated.

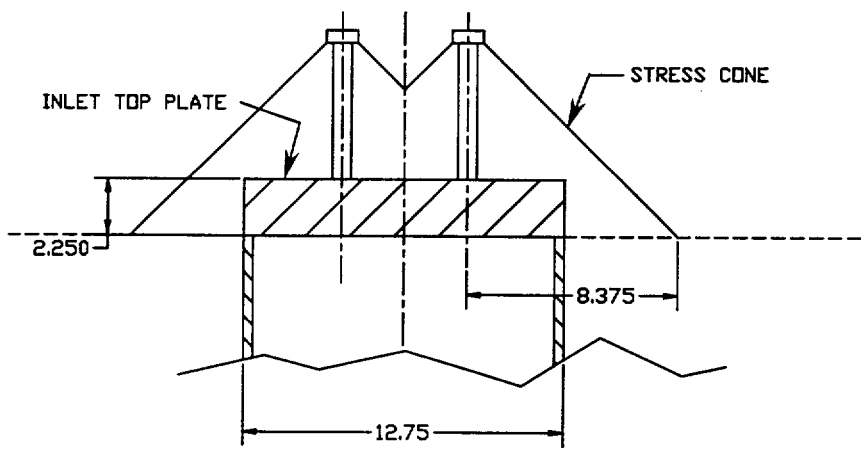

The concrete projected area (A_{cp}) is approximated by subtracting the corner areas (A_s) from the area of the encasing rectangle.

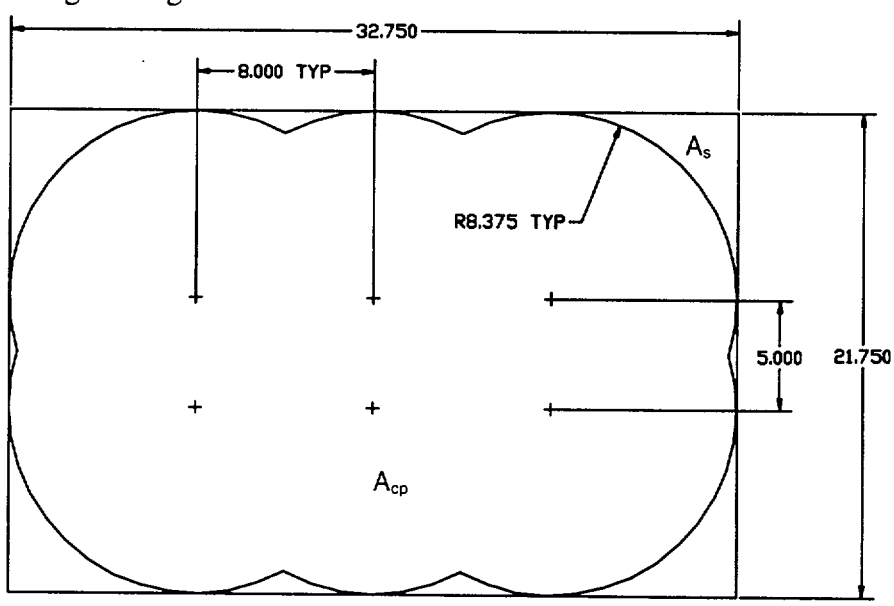

$$A_{cp} = (32.75 \times 21.75) - 4(15.05) = 652 \text{ in.}^2$$

where

$$A_s = R^2\left(1-\frac{\pi}{4}\right) = 8.375^2\left(1-\frac{\pi}{4}\right) = 15.05 \text{ in.}^2$$

This calculated concrete projected area (A_{cp}) is slightly non-conservative because the outer boundaries of the stress cones are assumed to be connected by tangents. For this reason, the concrete projected area (A_{cp}) is taken to be 600 in.^{2}.

The maximum pullout strength of the concrete (P_d) is defined by the equation:

$$P_d = 4 \times \phi \times \sqrt{f_c^{'}} \times A_{cp} = 4 \times 0.85 \times \sqrt{4000} \times 600.0 = 129{,}000 \text{ lb}$$

where

ϕ = 0.85, strength reduction factor

$f_c^{'}$ = 4,000 psi, concrete compression strength

A_{cp} = 600 in.^{2}, projected surface area of stress cones for Nelson studs, (conservative)

The maximum load occurs in the six Nelson studs located on the top of the air inlet.

The margin of safety for the concrete is:

$$MS = \frac{129{,}000}{38{,}366} - 1 = +2.36$$

where the concrete load is the sum of the inlet Nelson studs (3) multiplied by 2.

$$P = 2(19{,}810 + 1{,}452 - 2{,}079) = 38{,}366 \text{ lb}$$

For a single stress cone with a load of 18,300 lbs:

$$P_d = 4 \times 0.85 \times \sqrt{4000} \times 220.35 = 47{,}383 \text{ lb}$$

where

A_{cp} = 220.35 in^2 for a single Nelson stud

The margin of safety is:

$$MS = \frac{47,383}{19,810} - 1 = +1.39$$

The cross-sectional area (A_s) of the Nelson studs is:

$$A_s = \frac{\pi}{4} \times 0.75^2 = 0.44\,in^2$$

The allowable load per stud is

$$P_s = 0.44 \times 55,000 = 24,200\,lb.$$

where 55,000 psi is the ultimate tensile strength for ASTM A108 Grade 1010 through 1020 low carbon steel.

The margin of safety for the Nelson stud is:

$$MS = \frac{24,200}{19,810} - 1 = +0.22$$

Figure 3.4.3.4-1 Advanced Concrete Cask Base Weldment ANSYS Model

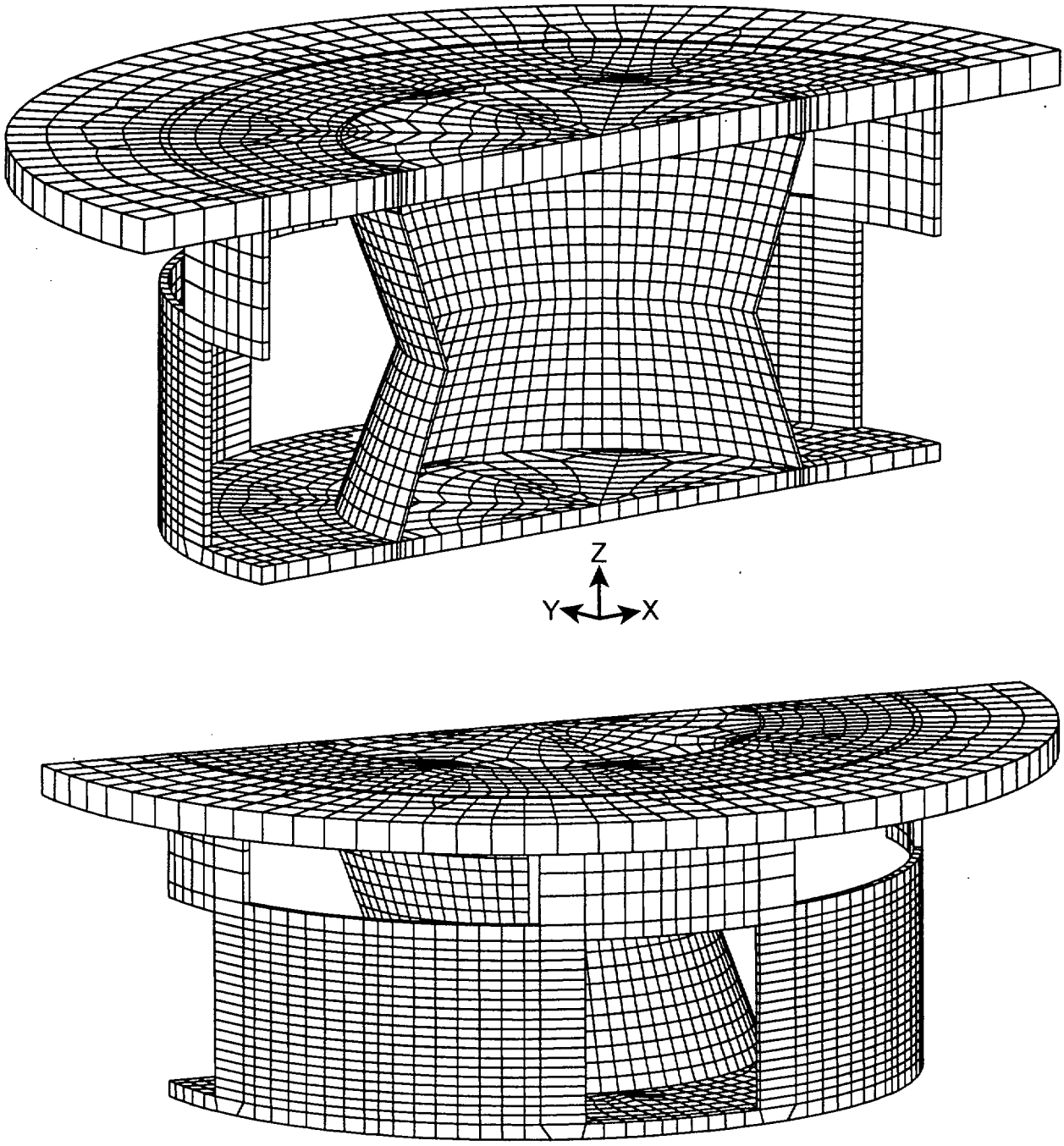

3.4.3.5 Advanced Canister Lift Evaluation

The adequacy of the Advanced canister lifting devices is demonstrated by evaluating the hoist rings, the canister structural lid, and the weld that joins the structural lid to the canister shell against the criteria in NUREG-0612 [8] and ANSI N14.6 [9]. The lifting configuration for the canister consists of eight hoist rings threaded into the structural lid at equally spaced angular intervals. The hoist rings are analyzed as a redundant system with two four-legged lifting slings. For redundant lifting systems, ANSI N14.6 requires that load-bearing members be capable of lifting three times the load without exceeding the tensile yield strength of the material and five times the load without exceeding the ultimate tensile strength of the material. NUREG-0612 also requires that if a non-redundant lifting device is used, the lifting device should have twice the design safety factor (i.e. 6 on yield and 10 on ultimate) required by ANSI N14.6. The canister lift analysis is based on a bounding canister weight of 90,000 lbs, plus a dynamic load factor of 10%. The analysis weight is 99,000 lbs.

The canister lifting configuration is shown in the following figure, where: x is the distance from the canister centerline to the hoist ring center line (29.5 inches); F_y is the vertical component of force on the hoist ring; F_x is the horizontal component of force on the hoist ring; R is the sling length; and, F_R is the maximum allowable force on the hoist ring (30,000 lbs.). The angle θ is the angle from vertical to the sling.

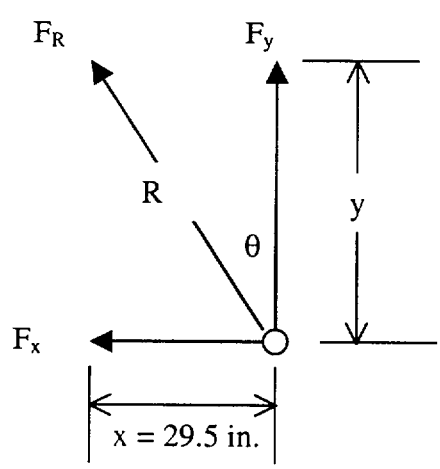

The vertical load, F_y, assuming a 10% dynamic load factor, is:

$$F_y = \frac{90{,}000 \text{ lbs x } 1.1}{4 \text{ lift points}} = 24{,}750 \text{ lbs}$$

The hoist rings are American Drill Bushing Company, Model 23200 Safety Engineered Hoist Rings, rated at 30,000 lbs., (or comparable ring from an alternative manufacture) with a safety factor of 5 on ultimate strength.

The maximum angle, θ, that will limit F_R to 30,000 lb is:

$$\theta = \cos^{-1}\left(\frac{F_y}{F_R}\right) = \cos^{-1}\left(\frac{24{,}750}{30{,}000}\right) = 34.4 \text{ deg}$$

The minimum sling length, R, is:

$$R = \frac{x}{\sin\theta} = \frac{29.5}{\sin 34.4^\circ} = 52.2 \text{ in.}$$

A minimum distance of 55 inches between the common lift point and the top of the canister is specified in Sections 8.1.2 and 8.2.

From the Machinery's Handbook [24], the tensile stress area, A_t, in the structural lid bolt hole threads, 2-4 ½ UNC-2B, is calculated as:

$$A_t = 0.7854\left(D - \frac{0.9743}{n}\right)^2 = 0.7854\left(2.00 - \frac{0.9743}{4.5}\right)^2 = 2.50 \text{ in}^2$$

The required thread length of engagement (L_e) is

$$L_e = \frac{2 \times A_t}{3.1416 K_{nmax}\left[0.5 + 0.57735n\left(E_{smin} - K_{nmax}\right)\right]}$$

$$L_e = \frac{2 \times 2.50}{3.1416(1.795)\left[0.5 + 0.57735(4.5)(1.8433 - 1.795)\right]} = 1.42 \text{ in.}$$

The actual thread length of engagement is 2.0 inches, but 1.75 inches is conservatively used. The thread shear area (A_n) in the structural lid is

$$A_n = 3.1416 n L_e D_{smin}\left[\frac{1}{2n} + 0.57735\left(D_{smin} - E_{nmax}\right)\right]$$

$$A_n = 3.1416(4.5)(1.75)(1.9751)\left[\frac{1}{2(4.5)} + 0.57735(1.9751 - 1.8681)\right] = 8.448 \text{ in}^2$$

The shear stress (τ) on the lid threads is

$$\tau = \frac{Fy}{A_n} = \frac{24{,}750}{8.448} = 2{,}930 \text{ psi}$$

The factors of safety for yield and ultimate stresses is

$$FS_{yield} = \frac{0.6 \times 19{,}750}{2{,}930} = 4.04 \rangle 3$$

$$FS_{ultimate} = \frac{0.42 \times 62{,}230}{2{,}930} = 8.92 \rangle 6$$

The criteria of NUREG-0612 and ANSI N14.6 for a redundant system are met. Therefore, the 2.0-inch length of thread engagement is adequate.

The structural adequacy of the Advanced canister structural lid and weld is evaluated using a finite element model of the upper portion of the canister. As shown in Figures 3.4.3.5-1 and 3.4.3.5-2, the model represents one-half of the upper section of the canister, including the structural and shield lids. The model uses gap/spring elements to simulate contact between adjacent components. Specifically, contact between the canister structural and shield lids is modeled using COMBIN40 combination elements in the axial (UY) degree of freedom. Simulation of the spacer ring is accomplished using a ring of COMBIN40 gap/spring elements connecting the shield lid and the canister in the axial direction at the lid lower outside radius. CONTAC52 elements are used to model the interaction between the structural lid and canister shell and the shield lid and canister shell just below the respective lid weld joints. The size of the CONTAC52 gaps was determined from nominal dimensions of contacting components. The COMBIN40 elements used between the structural and shield lids, and for the spacer ring were assigned small gap sizes of 0.001 in. All gap/spring elements are assigned a stiffness of 1×10^8 lb/in.

Boundary conditions were applied to enforce symmetry at the cut boundary of the model (in the x-y plane). All nodes on the x-y symmetry plane were restrained perpendicular to the symmetry plane (UZ). In addition, the nodes in the x-z plane at the bottom of the model were restrained in the axial direction (UY).

The lifting configuration for the Advanced canister consists of eight hoist rings bolted to the structural lid at equally spaced angular intervals. To simulate the lifting of the canister, point loads equal to one-eighth of the total loaded canister weight plus a dynamic loading factor of 10% were applied to the model as forces at the lift locations while restraining the model at its base in the axial direction. Because of the symmetry conditions of the model, the forces applied

to nodes on the symmetry plane were one-half of that applied at the other locations. The nodal point forces applied to the model as depicted in Figure 3.4.3.5-1 are calculated (including a dynamic load factor of 10%) as:

$$P/8 = (90{,}000 \times 1.1) \div 8 = 12{,}375 \text{ lbs}$$
$$P/16 = (90{,}000 \times 1.1) \div 16 = 6{,}188 \text{ lbs}$$

The allowable stresses for the canister shell (SA-240, Type 304L Stainless Steel) and structural lid (SA-240, Type 304L Stainless Steel) are:

Allowable	**275°F**	**300°F**
S_y (ksi)	19.75	19.2
S_u (ksi)	62.23	60.9

The canister shell and structural lid are evaluated using the maximum nodal stress intensity for each component. The structural lid weld is evaluated using the maximum membrane plus bending sectional stress. The results of the analysis are summarized as:

Location	**Stress (ksi)**	**Factor of Safety Based on S_y**	**Factor of Safety Based on S_u**
Canister Shell	2.53	7.59	24.1
Structural Lid	2.55	7.75	24.4
Structural Lid Weld	1.17	16.9	53.2

The criteria of NUREG-0612 and ANSI N14.6 for non-redundant systems are met. Thus, the canister shell and structural lid are adequate.

Figure 3.4.3.5-1 Advanced Canister Lift Finite Element Model

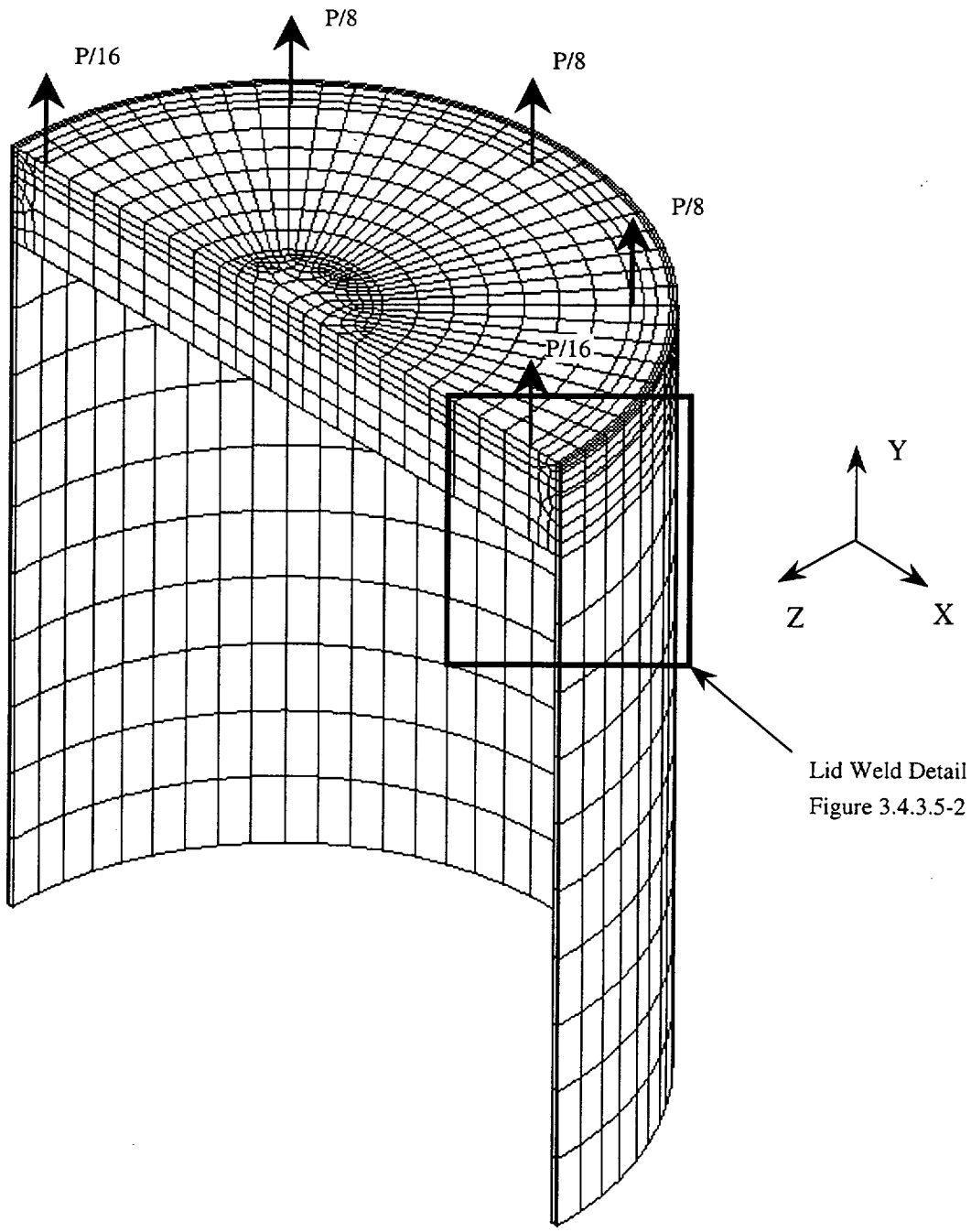

Figure 3.4.3.5-2 Advanced Canister Lid Weld Detail

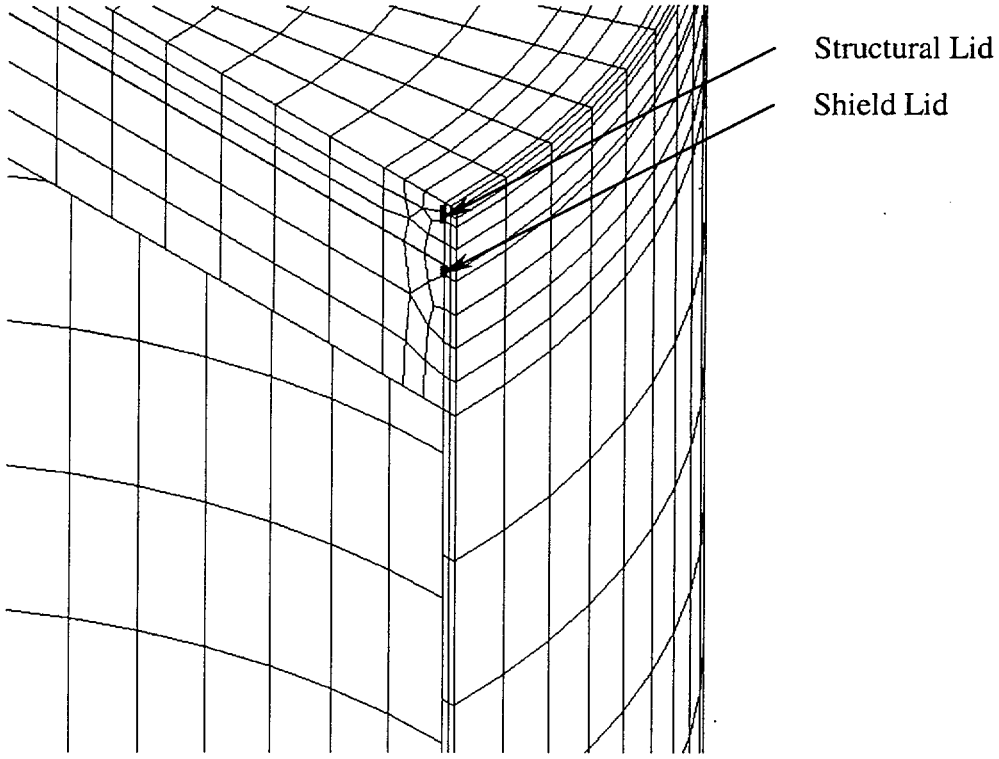

3.4.3.6 Advanced Transfer Cask Lift Evaluation

The evaluation of the advanced transfer cask presented here shows that the design meets NUREG-0612 [8] and ANSI N14.6 [9] requirements for nonredundant lift systems. The adequacy of the standard transfer cask is shown by evaluating the stress levels in all of the load-path components against the NUREG-0612 criteria.

3.4.3.6.1 Advanced Transfer Cask Shell and Trunnion

The adequacy of the trunnions and the cask shell in the region around the trunnions during lifting conditions is evaluated in this section in accordance with NUREG-0612 and ANSI N14.6.

A three-dimensional finite element model is used to evaluate the lifting of a fully loaded standard transfer cask. Because of symmetry, it was necessary to model only one-quarter of the standard transfer cask, including the trunnions and the shells at the trunnion region. The stiffener plate above the trunnions (between the two shells) is included in the model. The model represents the bounding configuration without the stiffener plates. The lead and the NS-4-FR between the inner and outer shells of the standard transfer cask are neglected, since they are not structural components. SOLID95 (20 noded brick element) and SHELL93 (8 noded shell element) elements are used to model the trunnion and shells, respectively. Due to the absence of rotation degrees of freedom for the SOLID95 elements, BEAM4 elements perpendicular to the shells are used at the interface of the trunnion and the shells to transfer moments from the SOLID95 elements to SHELL93 elements. The finite element model is shown in Figure 3.4.3.6-1.

The total weight of the heaviest loaded transfer cask (Advanced Class 3 PWR) is calculated at approximately 217,300 pounds. A conservative load of 225,000 lb., plus a 10% dynamic load factor, is used in the model. The load used in the quarter-symmetry model is $(225{,}000 \times 1.1)/4 =$ 61,875 lb. The load is applied upward at the trunnion as a "surface load" whose location is determined by the lifting yoke dimensions. The model is restrained along two planes of symmetry with symmetry boundary conditions. Vertical restraints are applied to the bottom of the model to resist the force applied to the trunnion.

The maximum temperature in the standard transfer cask shell/trunnion region is conservatively evaluated as 300°F. For the ASTM A-588 shell material, the yield strength, S_y, is 45.6 ksi, and the ultimate strength, S_u, is 70 ksi. The trunnions are constructed of ASTM A-350 carbon steel, Grade LF2, with a yield stress of 31.9 ksi and an ultimate stress of 70 ksi. The standard impact test temperature for ASTM A-350, Grade LF2 is -50°F. The NDT temperature range is -70°F to -10°F

for ASTM A-588 with a thickness range of 0.625 in. to 3 in. [25]. Therefore, the minimum service temperature for the trunnion and shells is conservatively established as -10°F (40°F higher than the NDT test temperature, in accordance with Section 4.2.6 of ANSI N14.6 [9].

Table 3.4.3.6-1 through Table 3.4.3.6-6 provide summaries of the top 30 maximum combined stresses (Equivalent von Misses stresses) for both surfaces of the outer shell, inner shell, and stiffener plate (see Figure 3.4.3.6-2 through Figure 3.4.3.6-4 for node locations for the outer shell, inner shell, and stiffener plate, respectively). Stress contour plots for the outer shell are shown in Figure 3.4.3.6-5 and Figure 3.4.3.6-6. Stress contours for the inner shell are shown in Figure 3.4.3.6-7 and Figure 3.4.3.6-8. Stress contours for the stiffener plate are shown in Figures 3.4.3.6-9 and 3.4.3.6-10. As shown in Table 3.4.3.6-1 through Table 3.4.3.6-6, all stresses, except local stresses, meet the NUREG-0612 and ANSI N14.6 criteria. That is, a factor of safety of 6 applies on material yield strength and 10 applies on material ultimate strength. The high local stresses, as defined in ASME Code Section III, Article NB-3213.10, which are relieved by slight local yielding, are not required to meet the 6 and 10 safety factor criteria [see Ref. 9, Section 4.2.1.2].

The localized stresses occur at the interfaces of the trunnion with the inner and outer shells. In accordance with ASME Code, Article NB-3213.10, the area of localized stresses cannot be larger than:

$$1.0\sqrt{Rt}$$

where:

R is the minimum midsurface radius
t is the minimum thickness in the region considered

Based on this formula, the maximum distance from the discontinuity to the local high stress is less than 5.1 inches for the inner shell and 7.3 inches for the outer shell.

For the trunnion, the maximum tensile bending stress and average shear stresses occur at the interface with the outer shell. The linearized stresses through the trunnion are 4,260 psi in bending and 1,871 psi in shear. Comparing these stresses to the material allowable yield and ultimate strength (A350, Grade LF2), the factor of safety on yield strength is 7.5 (which is >6) and on ultimate strength is 16.4 (which is >10).

3.4.3.6.2 Advanced Retaining Ring and Bolts

The standard transfer cask uses a retaining ring bolted to the top flange to prevent inadvertent lifting of the canister out of the transfer cask, which could increase the radiation exposure to nearby workers. In the event that the loaded transfer cask is inadvertently lifted by attaching to the canister eyebolts instead of the transfer cask trunnions, the retaining ring and bolts have sufficient strength to support the weight of the heaviest transfer cask, plus a 10% dynamic load factor.

Retaining Ring

To qualify the retaining ring, the equations for annular rings are used (Roark [26], Table 24, Case 1e). The retaining ring is represented as shown in the sketch below. The following sketch assists in defining the variables used to calculate the stress in the retaining ring and bolts. The model assumes a uniform annular line load *w* applied at radius r_o.

The boundary conditions for the model are outer edge fixed, inner edge free with a uniform annular line load w at radius r_o.

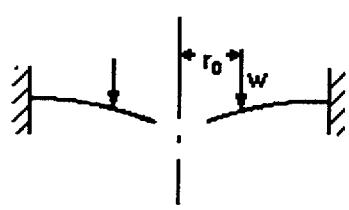

The material properties and parameters for the analysis are:

Plate dimensions:	
thickness:	$t = 0.75$ in
outer radius (bolt circle):	$a = 37.28$ in
outer radius (outer edge):	$c = 38.52$ in
inner radius:	$b = 32.37$ in
Weight of bounding transfer cask:	$wt = 124{,}000 \text{ lb} \times 1.1$
Radial location of applied load:	$r_o = 33.53$ in
Material:	ASTM A588
Modulus of elasticity:	$E = 28.3 \times 10^6$ psi
Poisson's ratio:	$\nu = 0.31$
Number of bolts:	$Nb = 32$
Radial length of applied load:	$L_r = 2\pi r_o$
	$L_r = 210.675$ in
Applied unit load:	$w \equiv \frac{wt}{L_r}$
	$w = 647.44$ psi