GROUP NO. & QUANTITY						ITEM NO.	NAME	PIECE NO.	MATERIAL	REMARKS
6	5	4	3	2	1					
					X	1	INSTRUMENTATION SUPPORT PLATE	E-23866-165-052-1		
					1	2	PLATE		-2 ASTM A-240-63 304-2	
					1	3	GUSSET		-3 ASTM A-240-63 304-2	

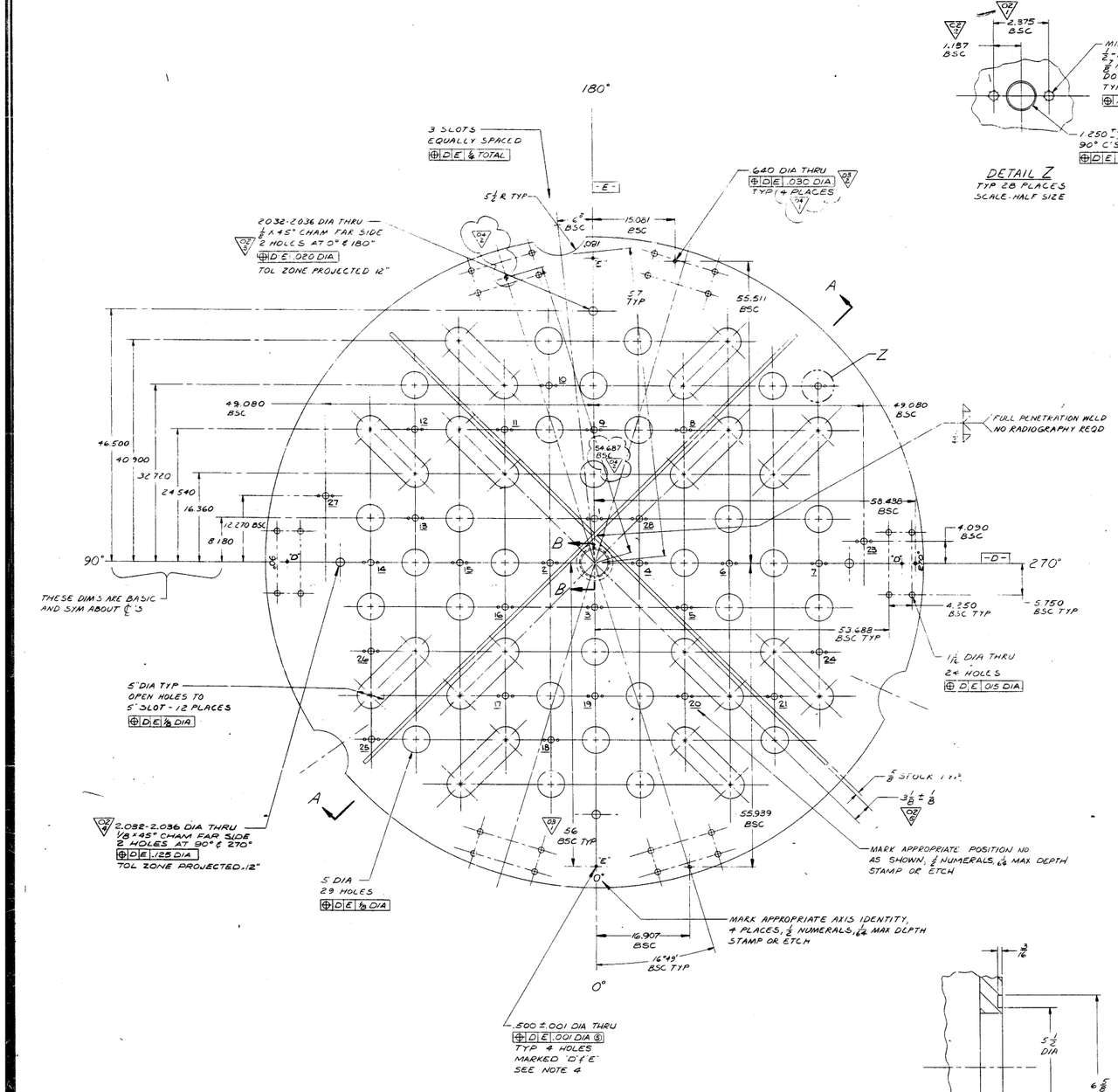

DETAIL Z
TYP 28 PLACES
SCALE - HALF SIZE

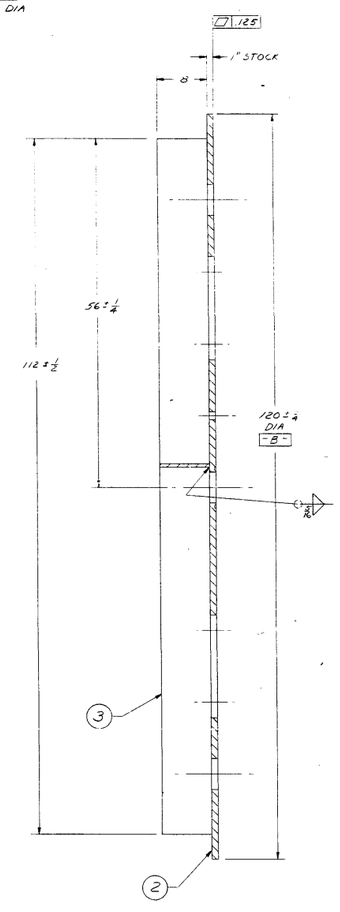

SECTION A-A
ROTATED INTO PLANE

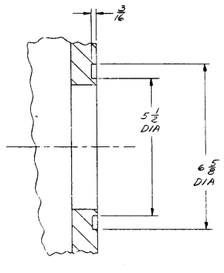

SECTION B-B
SCALE - HALF SIZE

4. HOLES MARKED 'D' & 'E' SHALL BE VIBROETCHED WITH RESPECTIVE IDENTITY LETTER ⅛ HGH, WITHIN ⅛ OF EDGE OF HOLES 'D' & 'E'.
3. DATUMS -D- & -E- ARE PERPENDICULAR PLANES INTERSECTING AT THE CENTER OF DIA -B-
2. PRODUCT TO BE IN ACCORDANCE WITH CENPD SPEC 23866-16-40-1
1. DIMENSIONING & TOLERANCING PER USASI Y14.5-1966

E-23866-165-052
04

EA-FC-00-134 DF 12/01

FOR INFORMATION ONLY
JUN 2 1972
Gibbs & Hill, Inc.
New York

RECEIVED
MAY 11 1972
GIBBS & HILL, INC.

CERTIFIED FOR CONSTRUCTION

OMAHA PUBLIC POWER DISTRICT
FORT CALHOUN UNIT NO. 1

PREPARED UNDER AEC CONTRACT | CEGD CONTRACT 23866

ALL ITEMS DEPICTED ON THIS DRAWING ARE WITHIN LICENSE RENEWAL SCOPE.

REV.	DESCRIPTION	BY & DATE	CHK. & DATE	ENG. APPD	PROJ. APPD
04	1. ZONE G-5; WAS 3 PLACES 2. ZONE G-6; ADDED .640 DIA HOLE & LOCATING DIM. PER REV REQ 23866-142	YL 7-14-72	7-14-72	7-14-72	

REV.	DESCRIPTION	BY & DATE	CHK. & DATE	ENG. APPD
03	CERTIFIED FOR CONSTRUCTION PER REV REQ 23866-320	DW 5-2-69	RJH 5-2-69	5/1/69
02	(1) DETAIL Z; WAS 2.500, (2) DETAIL Z; WAS .250, (3) ZONE 7G; WAS 4 HOLES, (4) ZONE 8D; ADDED CALLOUT, (5) ZONE 5D; WAS 3" PER REV REQ NO. 23866-292	[illegible]	[illegible]	[illegible]
01	(1) ZONE 6D WAS 57 7/16, (2) ADDED .640 DIA HOLE, 3 PLACES & LOCATING DIM. PER REV REQ 23866-167	DW 11-14-68	[illegible]	[illegible]

TOLERANCES UNLESS OTHERWISE SPECIFIED			
DIMENSIONS	UNDER 6	6-18	OVER 18
DECIMAL DIMS.	±.005	±.005	±.010
FRACTIONAL DIMS.	±1/64	±1/32	±1/16
FINISH (√)AA-125 MICRO IN.		ANGLES ±1/2°	
THREADS-UNIFIED CL-2A-2B		CHAMFER ±5°	
BREAK CORNERS-1/64 MAX. RAD. OR CHAMFER			
FILLETS-1/64 TO 1/32 RADIUS			
DIMENSION IN INCHES BASED ON 68°F (20°C)			

NEXT ASSY: E-23866-165-051
FINAL ASSY:
SUPERSEDES:
SUPERSEDED:

DO NOT SCALE D'WG. | CALC. WT.:
SCALE: 1/8" NOTED | ACT. WT.:

THIS DRAWING IS THE PROPERTY OF COMBUSTION ENGINEERING, INC. NUCLEAR WINDSOR, CONNECTICUT AND IS NOT TO BE REPRODUCED, OR USED TO FABRICATE ANY ITEM OR PERFORM ANY WORK UPON OR FROM WHICH IS SHOWN HEREON EXCEPT WHERE PROVIDED FOR BY AGREEMENT WITH SAID COMPANY.

DRAWN BY:	H. HARD	4-2-69
CHECKER:	[illegible]	4-28-69
APPROVALS:	[illegible]	5-15-69
	[illegible]	5-20-69
	[illegible]	5-21-69
	[illegible]	5-21-69
	[illegible]	5-21-69

INSTRUMENTATION SUPPORT PLATE

E-23866-165-052 | 04
SHEET | OF | REV.

020424

FOR INFORMATION ONLY

NOTE: THIS PRINT IS TO BE USED FOR THE FCS LICENSE RENEWAL PROJECT ONLY. IT MAY NOT REFLECT THE MOST CURRENT REVISION OF THIS DRAWING.