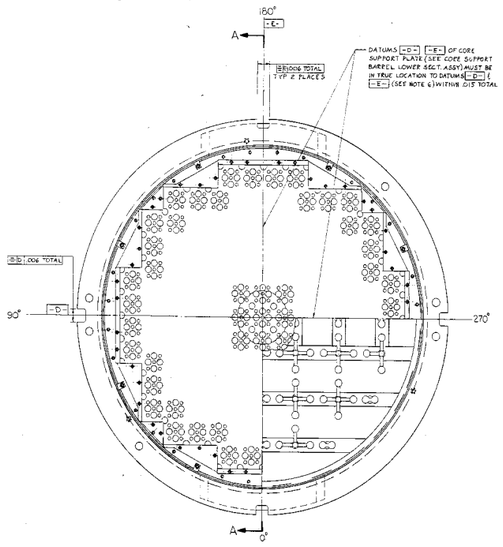

PLAN VIEW

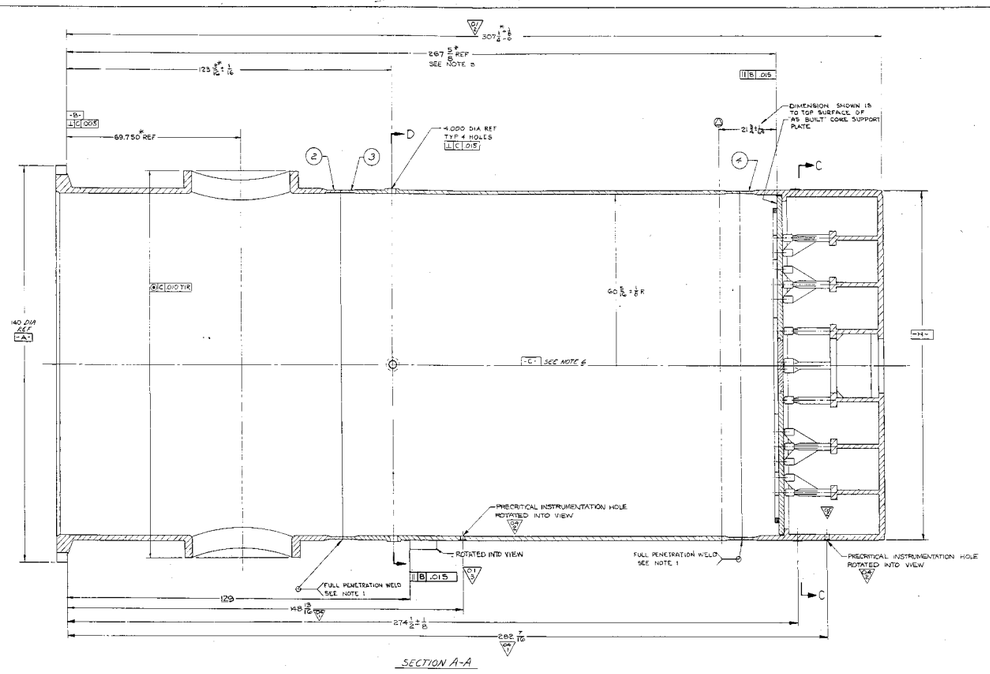

SECTION A-A

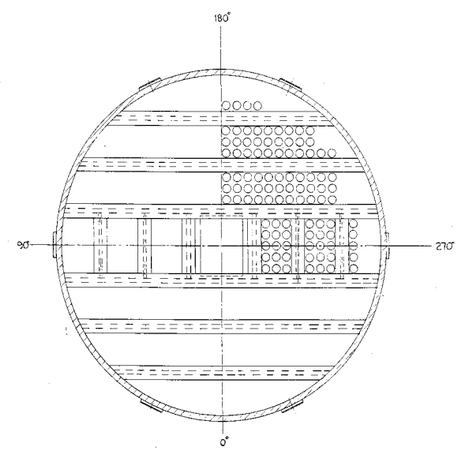

SECTION C-C
(CORE SUPPORT COLUMNS NOT SHOWN)

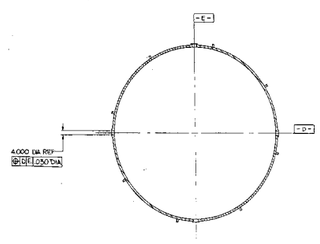

KEY PLAN D-D
NO SCALE

BILL OF MATERIALS
QUANTITIES ARE FOR

GROUP NO. & QUANTITY						ITEM NO.	NAME	PIECE NO.	MATERIAL	REMARKS
6	5	4	3	2	1					
1						1	CORE SUPPORT BARREL	J-23866-164-013		
1						2	CORE SUPPORT BARREL UPPER SECTION	E-23866-164-014		
1						3	CORE SUPPORT BARREL CENTER SECTION	J-23866-164-015		
1						4	CORE SUPPORT BARREL LOWER SECT. ASSY.	J-23866-164-016		

6. CENTERLINE -C- IS DEFINED AS PASSING THRU THE TRUE CENTERS OF DIAMETERS -A- & -B-. DATUMS -D- & -E- ARE DEFINED AS PERPENDICULAR TO SAID WRONG LINE, OR INTERSECTION COINCIDES WITH -C-.

5. ALL DIMENSIONS SHOWN ARE FINISHED DIMENSIONS AND DO NOT INCLUDE ANY ALLOWANCES FOR MACHINING OR WELDING.

4. DIMENSIONING AND TOLERANCING PER USASI Y14.5 1966.

3. FINAL DIMENSION MUST BE DETERMINED BY FABRICATOR (MUST SATISFY THE 148 5/16 ± 1/8 SHOWN REQUIREMENT BETWEEN CORE SUPPORT PLATE & FUEL ALIGNMENT PLATE AS INDICATED ON DWG J-23866-164-002

2. * INDICATES AS BUILT DIMENSIONS ARE TO BE RECORDED PER CENPD SPEC 23866-16-40-1

1. PRODUCT TO BE IN ACCORDANCE WITH CENPD SPEC 23866-16-40-1

OPPD TAG NUMBER
RC-7A

J-23866-164-013

REF SH. 34444
FILE 1655

EA-FC-00-134 DF 12/01

ALL ITEMS DEPICTED ON THIS DRAWING ARE WITHIN LICENSE RENEWAL SCOPE.

REV.	STATUTION	BY	CHK'D	DATE	APP'D
V	SECTION A-A DIMENSIONS ADDED (2) NOTES REQUIRED PER REQ'S ON REQUEST NR 23866-1345				
V	(2) NOTE NR 3 WAS NR 2 (3) SEET A-A, COLUMNS REVISED PER DETAILS PER NRC REQ. 23866-1362				

REV.	DESCRIPTION	BY	CHK'D	DATE	APP'D
V	(1) DELETED WORK SURFACE FROM NOTES (2) REVISE NR 4 AS 2012 PER SEC. REQ. 23866-1.7 (3) ADDED (-) DIMENSIONS & LINES PER REV REQ 23866-1.7				
V	(7) (8) (9) DIM VARIATION PER REV REQ. 23866-1317				
V	20-350 ANCHOR BOLTS TO BLDG. & LATEST DESIGN. PER REQ PER 23866-1.8				
V	REVISED PLAN VIEW PER DETAILS PER REV REQ 23866-2.32				

UNLESS OTHERWISE SPECIFIED TOLERANCES			
DIMENSIONS	UNDER 6	6 - 18	OVER
DECIMAL DIMS.	±.005	±.005	±.005
FRACTIONAL DIMS.	±1/64	±1/32	±1/16
ANGLES	±1/4°	±1/4°	±1/4°
THREADS - UNIFIED	CL - 2A - 2B		
BREAK CORNERS	1/64 MAX. RAD. OR CHAMFER		
FILLETS	1/64 TO 1/32 RADIUS		
DIMENSION IN INCHES BASED ON ISO/R 129-1953			

UNLESS OTHERWISE SPECIFIED
DECIMAL TOL. ±
MATL. SPEC.
NEXT ASSY: J-23866-164-013
FINAL ASSY:
DO NOT SCALE DWG. CAD MTL.
SURFACE FINISH ASTM MTL.
COMBUSTION ENGINEERING, INC.
NUCLEAR DIVISION
WINDSOR, CONNECTICUT

OMAHA PUBLIC POWER DISTRICT
FORT CALHOUN UNIT NO. 1

PREPARED UNDER THE DIRECTION OF
CHECKED UNDER THE DIRECTION OF
APPROVED UNDER THE DIRECTION OF
DATE

CORE SUPPORT BARREL

J-23866-164-013

FOR INFORMATION ONLY

NOTE: THIS PRINT IS TO BE USED FOR THE FCS LICENSE RENEWAL PROJECT ONLY.
IT MAY NOT REFLECT THE MOST CURRENT REVISION OF THIS DRAWING.