BILL OF MATERIALS
QUANTITIES ARE FOR

GROUP NO. & QUANTITY 6	5	4	3	2	1	ITEM NO.	NAME	PIECE NO.	MATERIAL	REMARKS
					X	1	INTERNALS ASSY	J-23866-164-003-1		
					1	2	CORE SUPPORT ASSY	J-23866-164-011		
					1	3	UPPER GUIDE STRUCTURE ASSY	J-23866-164-031		
					8	4	SOCKET HEAD CAP SCREW	J-23866-164-003-4	SEE NOTE 9	3/4-10UNC-2A X 2 1/2 LG
					4	5	ALIGNMENT LUG	E-23866-164-004-1		
					4	6	GUIDE PIN	E-23866-164-017-10		
					4	7	NUT	E-23866-164-017-9		
					4	8	DOWEL PIN	J-23866-164-003-8	SEE NOTE 8	.375 DIA X 1 1/2 LG
					8	9	LOCKING BAR	J-23866-164-003-9	ASTM-F593-CS B-21-2	1/4 X 1/4 X 1 5/8 LG
					1	10	HOLD DOWN RING	E-23866-164-134		
					1	11	RING SHIM	E-23866-164-028		

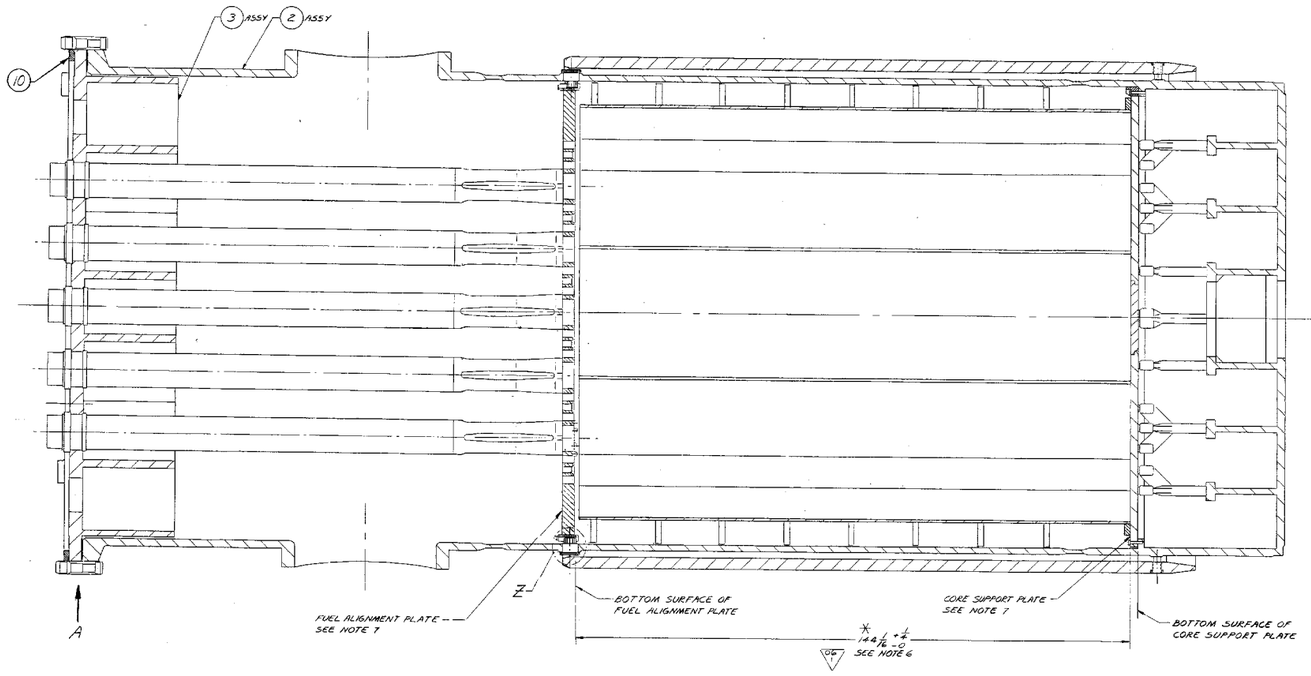

1 INTERNALS ASSEMBLY

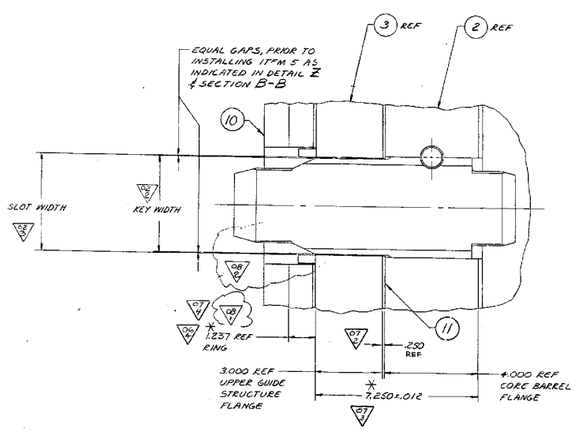

VIEW A
TYP 4 PLACES
SCALE: HALF

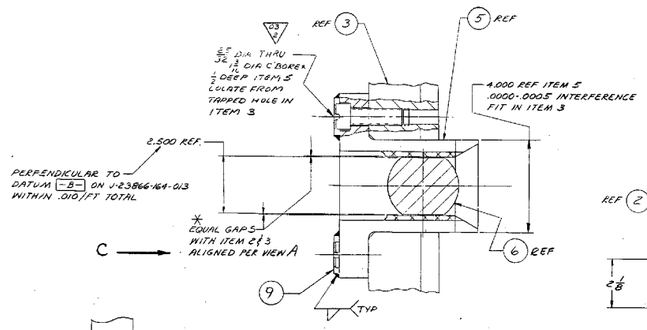

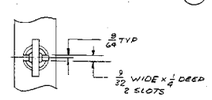

VIEW C
SCALE: HALF

SECTION B-B
SCALE: HALF

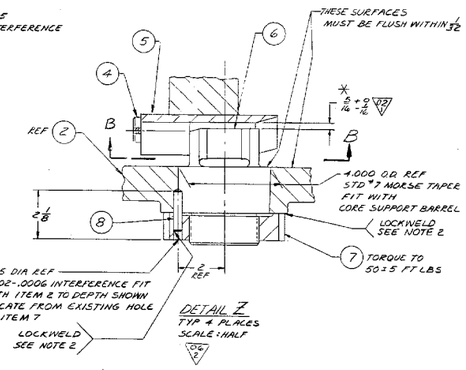

DETAIL Z
TYP 4 PLACES
SCALE: HALF

9. MATERIAL: ASTM A-193-66, SPI-1
8. MATERIAL: ASTM A-276-65, SPI-2
7. WITH ITEMS 2 & 3 ALIGNED AS SHOWN BY VIEW A INSPECT & RECORD DISPLACEMENT OF CENTERLINES OF FUEL ALIGNMENT PLATE AND CORE SUPPORT PLATE
6. MACHINE BOTTOM SURFACE AT EDGE OF CORE SUPPORT PLATE, IF NECESSARY, TO OBTAIN THIS DIMENSION DO NOT MACHINE MORE THAN 3 1/16 IN FROM THE EDGE OR REDUCE PLATE EDGE THICKNESS TO LESS THAN 1.750
5. LIGHTLY COAT THREADS WITH NEOLUBE PRIOR TO TORQUING
4. * INDICATES AS BUILT DIMENSIONS TO BE RECORDED PER CENPD SPEC E3866-16-40-1
2. PRODUCT TO BE IN ACCORDANCE WITH CENPD SPEC E3866-16-40-1
1. DIMENSIONING & TOLERANCING PER USASI Y14.5-1966

OPPD TAG NUMBER
RC-1

J-23866-164-003 08

OPPD FORT CALHOUN STATION PRODUCTION ENGINEERING DIVISION
REV. SH 34451 APVD 4-10-82 REV 1
FILE 1653

EA-FC-00-134 DF 12/01

ALL ITEMS DEPICTED ON THIS DRAWING ARE WITHIN LICENSE RENEWAL SCOPE.

REV.	DESCRIPTION	BY & DATE	CHK. & DATE	ENG. APPR.	PROJ. APPR.
08	VIEW A: 1- WAS 1.180. E-REVISED ITEM 3 & 10. PER ADDITION OF TABS TO UGS KEY SLOTS. [E-B/M ITEM 10 WAS E-23866-164-113.] PER REV REQ. 23866-1				
07	(A) VIEW A - 1.365 WAS 1.295 & RING REVISED TO AGREE WITH DETAIL PER REV REQ 23866-383				
CONT.	(C) MAIN SECTION VIEW - PICTURE OF SUPPORT COLUMNS REVISED PER REV REQ 23866-384				
07	1. ADDED ITEMS 10 & 11 VIEW A2-ADDED .250 DIM. 3 7.250 ±.012 WAS 7.000 ±.007 4 1.180 WAS 1.365 PER REV. REQ 23866-840				
06	MAIN SECTION VIEW, PICTURE OF SUPPORT COLUMNS REVISED PER REV REQ 23866-109				
05	CERTIFIED FOR CONSTRUCTION PER REV. REQ. 23866-187				
04	3 - ZONE E-5; WAS 143 7/16, PER REV REQ 23866-326. 2 - REVISED SECTION B-B, DETAIL Z, & ADDED VIEW C (5 - ADDED ITEM 9) PER REV REQ 23866-498				
03	ADDED CALC. WGT PER REV REQ. 23866-61				
02	1. DETAIL Z: WAS B-B 2. VIEW A: DELETED WORD "NOMINAL" PER REV REQ 23866-72.				
01	UPPER GUIDE STRUCTURE ASSY:- CER SHROUDS REVISED PER REV REQUEST 23866-102 2) SECT E-B NOTE WAS: MINOR THD DIA 2 1/4-0 DEEP 3/4 WIDE-28.374 MIN DEPTH FULL THD LOCATED FROM ITEM 5 TYP PER REV REQUEST 23866-106				

TOLERANCES UNLESS OTHERWISE SPECIFIED

DIMENSIONS	UNDER 6	6-18	OVER 18
DECIMAL DIMS.	±.005	±.005	±.010
FRACTIONAL DIMS.	±1/64	±1/32	±1/16
FINISH 63-AA-125 MICRO IN.		ANGLES ±1/2°	
THREADS-UNIFIED CL-2A-2B		CHAMFER ±5°	
BREAK CORNERS-1/64 MAX. RAD. OR CHAMFER			
FILLETS-1/64 TO 1/32 RADIUS			
DIMENSION IN INCHES BASED ON 68°F (20°C)			

OMAHA PUBLIC POWER DISTRICT
FORT CALHOUN UNIT NO: 1

NEXT ASSY: J-23866-164-001
FINAL ASSY:
SUPERSEDES:
SUPERSEDED:
DO NOT SCALE D'WG. CALC. WT.: 213,072 LB
SCALE: 1"=10" ACT. WT.:

THIS DRAWING IS THE PROPERTY OF COMBUSTION ENGINEERING, INC. NUCLEAR WINDSOR, CONNECTICUT AND IS NOT TO BE REPRODUCED, OR USED TO FURNISH INFORMATION FOR MAKING OF DRAWINGS OR APPARATUS EXCEPT THEREUNDER, VOIDED FOR BY AGREEMENT WITH SAID COMPANY.

		CENP. CONTRACT
PREPARED UNDER A.E. CONTRACT		23866
DRAWN BY: R. SHARD		2-7-68
CHECKED:		2-7-68
APPROVALS:		2-7-68
		3-6-68
		3-6-68
		2-7-73
		2-7-74

REACTOR INTERNALS ASSEMBLY

J-23866-164-003 08
SHEET OF REV.

FOR INFORMATION ONLY

NOTE: THIS PRINT IS TO BE USED FOR THE FCS LICENSE RENEWAL PROJECT ONLY. IT MAY NOT REFLECT THE MOST CURRENT REVISION OF THIS DRAWING.