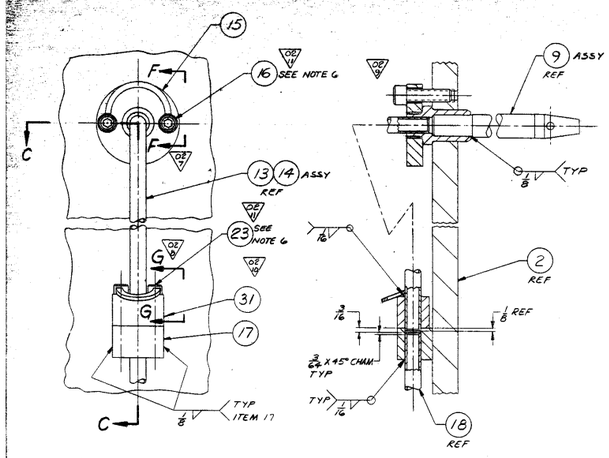

DETAIL Z SHT 1
SCALE: HALF SIZE
TYP-28 PLACES

SECTION C-C
SCALE: HALF SIZE

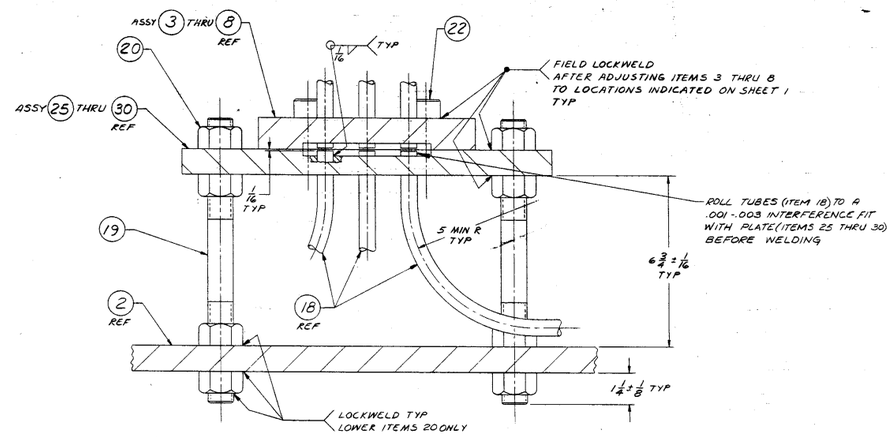

SECTION B-B SHT 1
SCALE: HALF SIZE

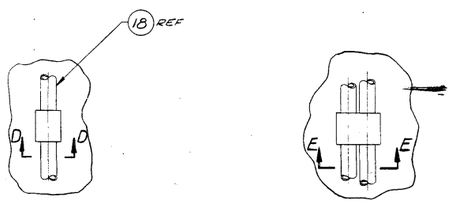

DETAIL X SHT 1
SCALE: HALF SIZE

DETAIL Y SHT 1
SCALE: HALF SIZE

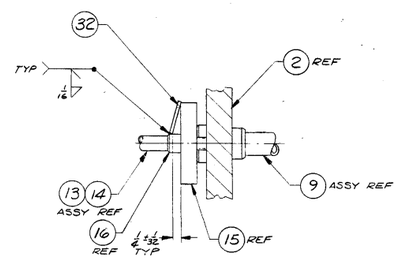

SECTION F-F
SCALE: HALF SIZE

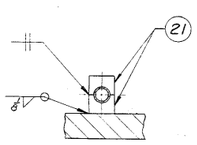

SECTION D-D
SCALE: HALF SIZE

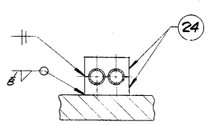

SECTION E-E
SCALE: HALF SIZE

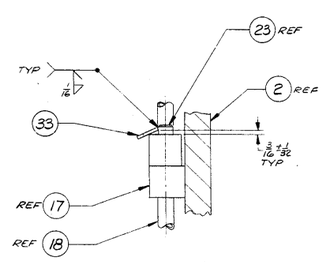

SECTION G-G
SCALE: HALF SIZE

EA-FC-00-134 DF 12/01

CERTIFIED FOR CONSTRUCTION

ALL ITEMS DEPICTED ON THIS DRAWING ARE WITHIN LICENSE RENEWAL SCOPE.

REV.	DESCRIPTION	BY & DATE	CHK. & DATE	ENG. APPD	PROJ. APPD
03	SEE SHEET NO 1 FOR REVISIONS	RJA 12-2-96	RJB 12-2-96	KWM 12-3-96	RDB 12-3-96

REV.	DESCRIPTION	BY & DATE	CHK. & DATE	ENG. APPD
01	CERTIFIED FOR CONSTRUCTION PER REV REQ 23866-320	DW 5-2-00	RJB 6-2-00	KWM 6-2-00
02	FOR REVISIONS SEE SHEET 1 PER REV REQ 23866-475	DW 10-17-08		KWM 10-17-08
03	(7) ADDED SECT. F-F; (8) ADDED SECT G-G; (9) SECT. C-C REMOVED LOCKWELD FROM ITEM 16; DETAIL Z: (10) REMOVED LOCKWELD FROM ITEM 23; (11) ADDED SEE NOTE 6 TO ITEMS 16 & 23 PER REV REQ 23866-481	DW 11-5-09	KWM 11-16-09	KWM 11-16-09

TOLERANCES UNLESS OTHERWISE SPECIFIED

DIMENSIONS	UNDER 6	6-18	OVER 18
DECIMAL DIMS.	±.005	±.005	±.010
FRACTIONAL DIMS.	±1/64	±1/32	±1/16
FINISH (√)AA-125 MICRO IN.		ANGLES ±1/2°	
THREADS-UNIFIED CL-2A-2B		CHAMFER ±5°	
BREAK CORNERS-1/64 MAX. RAD. OR CHAMFER			
FILLETS-1/64 TO 1/32 RADIUS			
DIMENSION IN INCHES BASED ON 68°F (20°C)			

NEXT ASSY:
FINAL ASSY:
SUPERSEDES:
SUPERSEDED:
DO NOT SCALE D'WG. CALC. WT.:
SCALE: AS NOTED ACT. WT.:

THIS DRAWING IS THE PROPERTY OF COMBUSTION ENGINEERING, INC. NUCLEAR WINDSOR, CONNECTICUT AND IS NOT TO BE REPRODUCED, OR USED TO FURNISH ANY INFORMATION FOR MAKING OF DRAWINGS OR APPARATUS EXCEPT WHERE PROVIDED FOR IN AGREEMENT WITH SAID COMPANY.

OMAHA PUBLIC POWER DISTRICT
FORT CALHOUN UNIT NO. 1

COMPONENT CODE 91-0128-0470

PREPARED UNDER AEC CONTRACT	CEND CONTRACT
	23866

DRAWN BY: PV SHARP	4-7-65	
CHECKED: [illegible]	4-21-65	
APPROVALS: [illegible]	4-30-65	
[illegible]	4-30-65	
[illegible]	4-30-65	
[illegible]	4-30-65	
[illegible]	4-30-65	

INSTRUMENTATION SUPPORT ASSEMBLY

E-23866-165-051 | 03

SHEET 2 OF 2 REV.

E-23866-165-051
SHEET 2 OF 2 03

8 7 6 5 4 3 2 1

FOR INFORMATION ONLY

NOTE: THIS PRINT IS TO BE USED FOR THE FCS LICENSE RENEWAL PROJECT ONLY.
IT MAY NOT REFLECT THE MOST CURRENT REVISION OF THIS DRAWING.