BILL OF MATERIALS
QUANTITIES ARE FOR

GROUP NO. & QUANTITY 6	5	4	3	2	1	ITEM NO	NAME	PIECE NO	MATERIAL	REMARKS
					X	1	HOLD DOWN RING ASSY	E23866-164-134		
					1	2	HOLD DOWN RING	-2	[illegible]	
					6	3	SOCKET HEAD CAP SCREW	-3	[illegible]	1-13UNC-2A x 1 1/4 LENG
					6	4	LOCKBAR	-4	[illegible]	
					2	5	LIFTING HUB	-5	[illegible]	SEE ITEM 2 FOR [illegible]
					1	6	LIFTING HUB	-6	[illegible]	SEE ITEM 2 FOR [illegible]

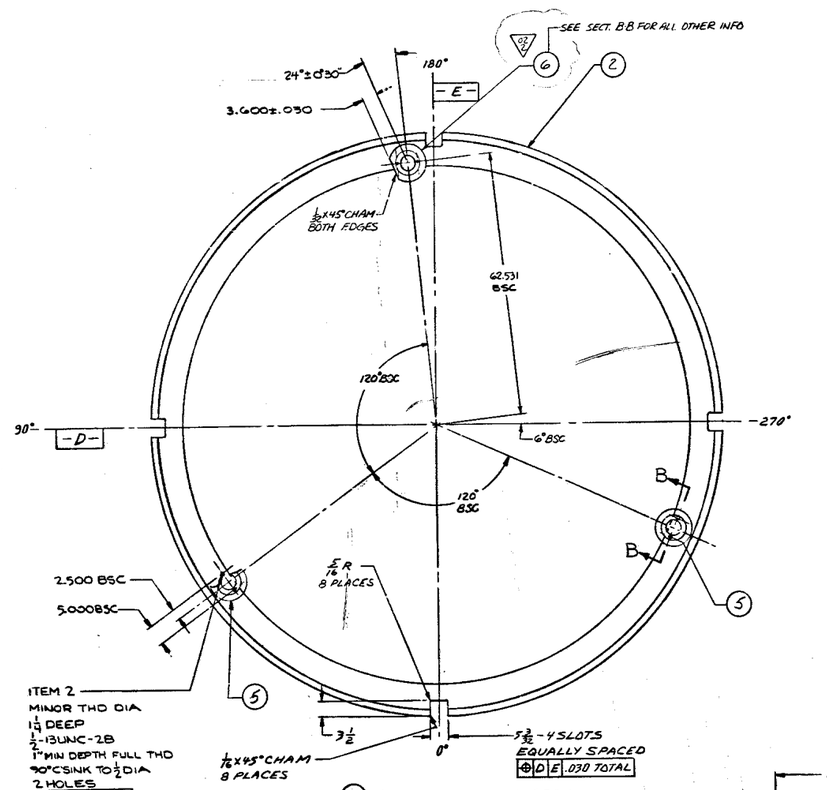

1 HOLD DOWN RING ASSY
SCALE: 1" = 1'-0"

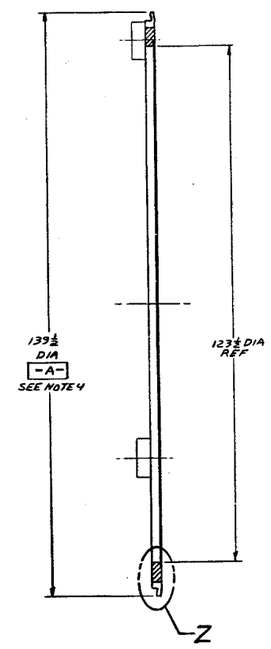

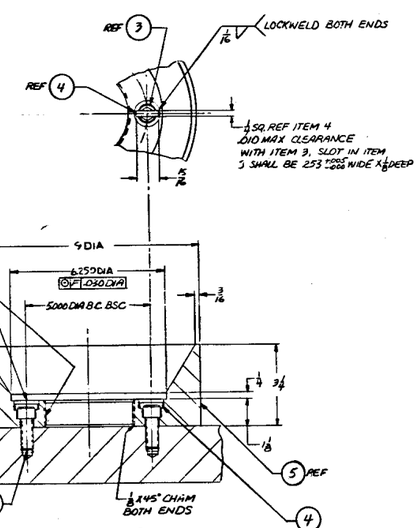

SECTION B-B
SCALE: HALF SIZE

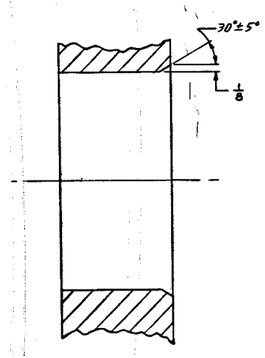

SECTION A-A
SCALE: 1/1

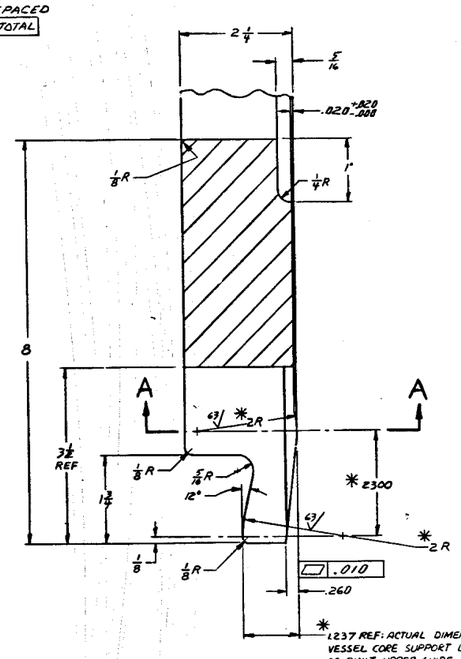

DETAIL Z
SCALE: 1/1

*2.237 REF: ACTUAL DIMENSION AS BUILT PRESSURE VESSEL CORE SUPPORT LEDGE (8.263 AVG) MINUS AS BUILT UPPER GUIDE STRUCTURE FLANGE THICKNESS (2.922 AVG) MINUS AS BUILT CORE BARREL FLANGE THICKNESS (3.396 AVG) MINUS AS BUILT SHIM THICKNESS (.252 AVG) PLUS .144 ± .003 (REF DCR NO. 189350B-99)

4. DATUMS -D- & -E- ARE PERPENDICULAR PLANES INTERSECTING AT THE TRUE CENTER OF DIA -A-
3. * INDICATES AS BUILT DIMENSIONS TO BE RECORDED PER CENPS SPEC STD-485-400
2. PROCUREMENT TO BE IN ACCORDANCE WITH CENPS SPEC STD-485-400
1. DIMENSIONING & TOLERANCING PER USASI Y14.5-1966

E-23866-164-134
02

CERTIFIED FOR CONSTRUCTION

EA-FC-00-134 DF 12/01

REV	DESCRIPTION	BY & DATE	CHK & DATE	ENG APPR	PROJ APPR
01	"CERTIFIED FOR CONSTRUCTION" PER REV REQ. 23866-05	[illegible]	[illegible]	[illegible]	[illegible]
02	1-BM ITEM 5; MAT'L WAS "ASTM A-182-71 5PI-17R", & ADDED R' MARKS "2-ZONE H6, XRS ITEM 5 BM 1-QTY FOR ITEM 5 WAS 3, 4-ADDED ITEM 6. PER REV REQ 23866-05	MW	[illegible]	[illegible]	[illegible]

UNLESS OTHERWISE SPECIFIED

DIMENSIONS	UNDER 6	6 TO 18	OVER 18
DECIMAL DIMS	± .005	± .005	± .010
FRACTIONAL DIMS	± 1/64	± 1/32	± 1/16
FINISH (√ SAA-125)	MC 80 IN.	ANGLES ± 1/2°	
THREADS-UNIFIED CL 2A 2B		CHAMFER ± 5°	
BREAK CORNERS-1/64 MAX RAD OR CHAMFER			
FILLETS-1/64 TO 1/32 RADIUS			
DIMENSION IN INCHES BASED ON 68°F (20°C)			

DRAWN BY: AMBIO 2-14-76
CHECKED: [illegible] 2-14-76
APPROVALS: [illegible] 2-17-76
[illegible] 2-27-76
SCALE: AS NOTED DO NOT SCALE DWG.

OMAHA PUBLIC POWER DISTRICT
FORT CALHOUN UNIT NO. 1

NEXT ASSY:
SUPERSEDES:
COMMON NY CODE NO:

CONTRACT NO.
COMBUSTION ENGINEERING INC. NUCLEAR POWER SYSTEMS
NUCLEAR POWER SYSTEMS

HOLD DOWN RING ASSY
E-23866-164-134 02
SHEET OF REV.

Rev 76 162171

001547 001547

ALL ITEMS DEPICTED ON THIS DRAWING ARE WITHIN LICENSE RENEWAL SCOPE.

E-23866-164-134

FOR INFORMATION ONLY

NOTE: THIS PRINT IS TO BE USED FOR THE FCS LICENSE RENEWAL PROJECT ONLY. IT MAY NOT REFLECT THE MOST CURRENT REVISION OF THIS DRAWING.