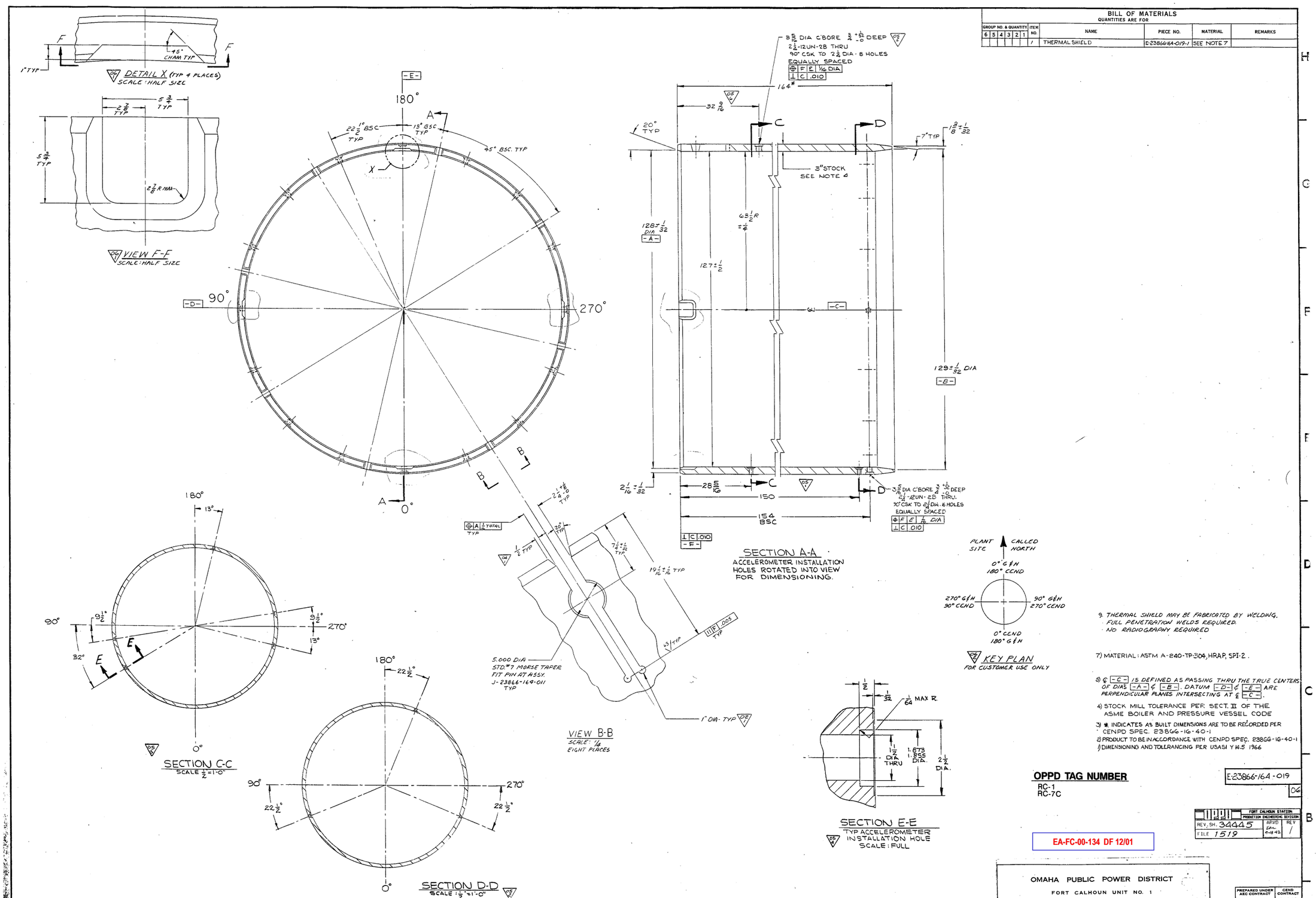

BILL OF MATERIALS

QUANTITIES ARE FOR

GROUP NO. & QUANTITY 6	5	4	3	2	1	ITEM NO.	NAME	PIECE NO.	MATERIAL	REMARKS
						1	THERMAL SHIELD	E-23866-164-019-1	SEE NOTE 7	

9) THERMAL SHIELD MAY BE FABRICATED BY WELDING. FULL PENETRATION WELDS REQUIRED. NO RADIOGRAPHY REQUIRED

7) MATERIAL: ASTM A-240-TP304, HRAP, SPI-2.

5) ℄ -C- IS DEFINED AS PASSING THRU THE TRUE CENTERS OF DIAS -A- & -B-. DATUM -D- & -E- ARE PERPENDICULAR PLANES INTERSECTING AT ℄ -C-.

4) STOCK MILL TOLERANCE PER SECT. II OF THE ASME BOILER AND PRESSURE VESSEL CODE

3) ✱ INDICATES AS BUILT DIMENSIONS ARE TO BE RECORDED PER CENPD SPEC. 23866-16-40-1

2) PRODUCT TO BE IN ACCORDANCE WITH CENPD SPEC. 23866-16-40-1

1) DIMENSIONING AND TOLERANCING PER USASI Y 14.5 1966

OPPD TAG NUMBER

RC-1
RC-7C

E-23866-164-019 06

OPPD FORT CALHOUN STATION PRODUCTION ENGINEERING DIVISION
REV. SH. 32445 ARVD 4-18-72 REV 1
FILE 1519

EA-FC-00-134 DF 12/01

ALL ITEMS DEPICTED ON THIS DRAWING ARE WITHIN LICENSE RENEWAL SCOPE.

REV.	DESCRIPTION	BY & DATE	CHK. & DATE	ENG. APPD	PROJ. APPD
06	1.-ADDED DETAIL X & VIEW F-F PER REV REQ 23866-569	HAS 5/23/70	5/26/70	5/26/70	5/27/70
	2.-ADDED KEY PLAN PER REV REQ 23866-568				

REV.	DESCRIPTION	BY & DATE	CHK. & DATE	ENG. APPD
04	1) IN VIEW B-B ADDED 1/2 TYP. PER REV. REQ. 23866-199.			
05	1) ADDED ACCELEROMETER INSTALLATION HOLES IN SECTION A-A 2) ADDED SECT. DD 3) ADDED SECT C-C. 4) ADDED SECT. E-E. PER REV. REQ 23866-345			
	(5) ZONE 4H ADDED 3 5/16 DIA C'BORE & 2 1/4-12UN-2B - 8 PLACES EQ SP.	DW 9/12/67		
	(6) ZONE 4H ADDED 83 7/8 PER REV REQ 23866-355			

REV.	DESCRIPTION	BY & DATE	CHK. & DATE	ENG. APPD
01	GENERALLY REVISED AS PER REV REQ. 23866-75	LG 4/16/68	S.F. Hulse 4-16-68	
02	1) VIEW B-B ADDED 1" DIA HOLES 2) ADDED NOTE 9 PER REV REQ 23866-81	D.W. 5-14-68	S.F. Hulse 5-14-68	
03	1) NOTE 8 WHICH SPECIFIED 010 DIA CONCENTRICITY BETWEEN MACHINED DIAS REMOVED PER REV REQ 23866-82	DWS 5-15-68	S.F. Hulse 5-15-68	
04	CERTIFIED FOR CONSTRUCTION PER REV. REQ 23866-187	RJA 10-15-68	S.F. Hulse 10-15-68	

OMAHA PUBLIC POWER DISTRICT
FORT CALHOUN UNIT NO. 1

TOLERANCES UNLESS OTHERWISE SPECIFIED			
DIMENSIONS	UNDER 6	6-18	OVER 18
DECIMAL DIMS.	±.005	±.005	±.010
FRACTIONAL DIMS.	±1/64	±1/32	±1/16
FINISH (√)-AA-125 MICRO IN.		ANGLES ±1/2°	
THREADS-UNIFIED CL-2A-2B		CHAMFER ±5°	
BREAK CORNERS-1/64 MAX. RAD. OR CHAMFER			
FILLETS-1/64 TO 1/32 RADIUS			
DIMENSION IN INCHES BASED ON 68°F (20°C)			

NEXT ASST: J-23866-164-011
FINAL ASST:
SUPERSEDES:
SUPERSEDED:
DO NOT SCALE D'WG. CALC. WT.:
SCALE: 1" = 1'-0" ACTUAL ACT. WT.:

THIS DRAWING IS THE PROPERTY OF COMBUSTION ENGINEERING, INC. NUCLEAR WINDSOR, CONNECTICUT AND IS NOT TO BE REPRODUCED, OR USED TO FURNISH ANY INFORMATION FOR MAKING OF DRAWINGS OR APPARATUS EXCEPT WHERE PROVIDED FOR BY AGREEMENT WITH SAID COMPANY.

PREPARED UNDER AEC CONTRACT — CEND CONTRACT 23866

DRAWN BY:	S. CIARCIA	7-31-67
CHECKER		7-18-68
APPROVALS		8-1-68
		8-1-68
		8-2-68
		8-7-68
		2-7-68

THERMAL SHIELD

E-23866-164-019 06

SHEET OF REV.

NOTE: THIS PRINT IS TO BE USED FOR THE FCS LICENSE RENEWAL PROJECT ONLY. IT MAY NOT REFLECT THE MOST CURRENT REVISION OF THIS DRAWING.

FOR INFORMATION ONLY