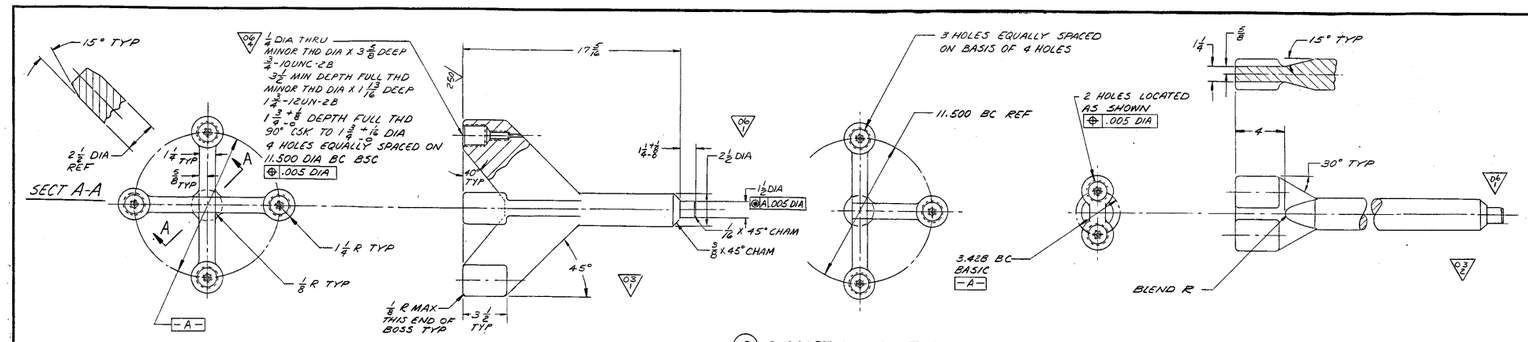

1 SUPPORT COLUMN-FOUR LEG
NEXT ASSY: J-23866-164-012
SCALE: QUARTER
SEE NOTES 6 & 9

2 SUPPORT COLUMN-THREE LEG PLAN VIEW
FOR ALL OTHER DIMENSIONS AND INFO
SEE ITEM 1 - NEXT ASSY: J-23866-164-012
SCALE: QUARTER
SEE NOTES 6 & 9

3 SUPPORT COLUMN - TWO LEG
FOR ALL OTHER DIMENSIONS AND INFO
SEE ITEM 1 - NEXT ASSY: J-23866-164-012
SCALE: QUARTER
SEE NOTES 6 & 9

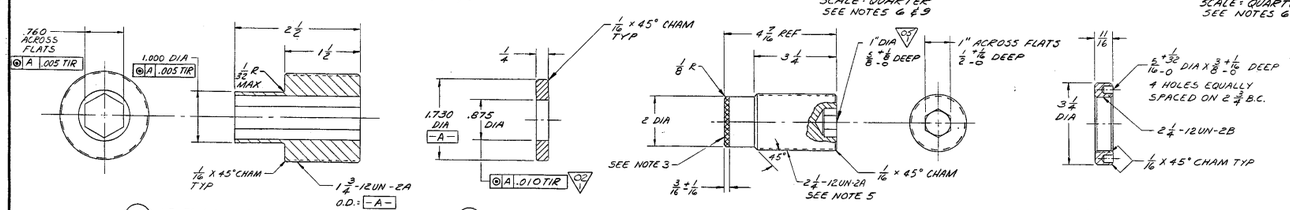

4 LEVELING NUT
NEXT ASSY: J-23866-164-012
SCALE: FULL

5 SPACER
NEXT ASSY: J-23866-164-012
SCALE: FULL

6 POSITIONING PIN
FOR ALL OTHER INFORMATION SEE
DET Z DWG J-23866-164-011
SCALE: HALF

7 LOCKING COLLAR
NEXT ASSY: J-23866-164-011
SCALE: HALF

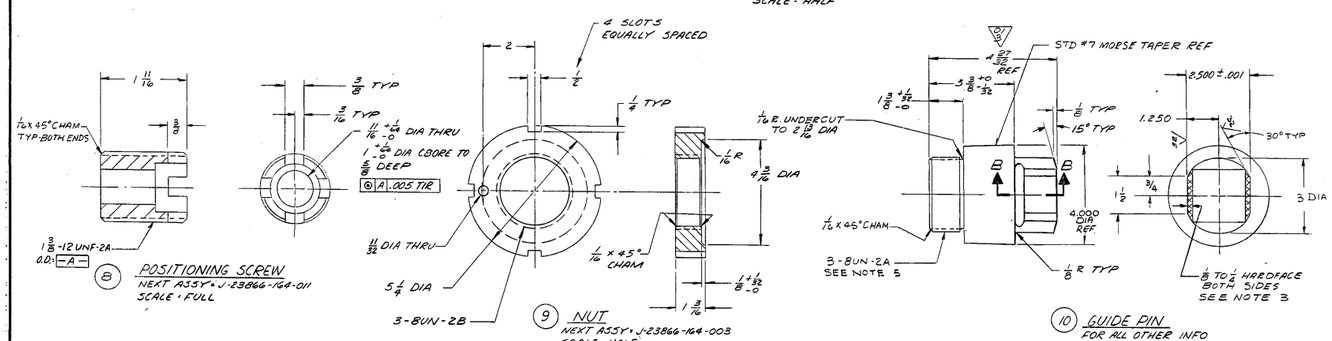

8 POSITIONING SCREW
NEXT ASSY: J-23866-164-011
SCALE: FULL

9 NUT
NEXT ASSY: J-23866-164-003
SCALE: HALF

10 GUIDE PIN
FOR ALL OTHER INFO
SEE DET Z DWG
J-23866-164-003
SCALE: HALF

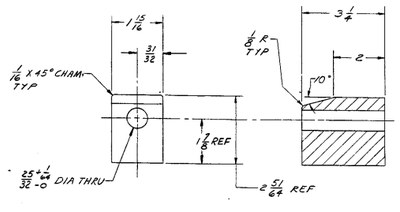

11 ALIGNMENT KEY
FOR ALL OTHER INFO SEE
DET Z & VIEW F, DWG
J-23866-164-012
SCALE: HALF

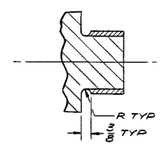

SECT B-B
SCALE: HALF

BILL OF MATERIALS

QUANTITIES ARE FOR

GROUP NO. & QUANTITY 6	5	4	3	2	1	ITEM NO.	NAME	PIECE NO.	MATERIAL	REMARKS
						1	SUPPORT COLUMN-FOUR LEG	E-23866-164-017-1	SEE NOTE 4	
						2	SUPPORT COLUMN-THREE LEG	-2	SEE NOTE 4	
						3	SUPPORT COLUMN-TWO LEG	-3	SEE NOTE 4	
						4	LEVELING NUT	-4	SEE NOTE 7	
						5	SPACER	-5	SEE NOTE 7	
						6	POSITIONING PIN	-6	SEE NOTE 7	
						7	LOCKING COLLAR	-7	SEE NOTE 7	
						8	POSITIONING SCREW	-8	SEE NOTE 7	
						9	NUT	-9	SEE NOTE 7	
						10	GUIDE PIN	-10	SEE NOTE 7	
						11	ALIGNMENT KEY	-11	SEE NOTE 7	
						~~12~~	~~LOCKING NUT~~	~~-12~~	~~SEE NOTE 7~~	

9. VENDOR TO SPECIFY BLEND RADII REQUIREMENTS. REQUIREMENTS ARE SUBJECT TO APPROVAL BY C.E.N.P.D.

7. MATERIAL: ASTM A-276-65-SPI-2

6. AFTER FINAL MACHINING PART WILL BE DYE CHECKED PER ASTM E 165-65
NOTE: DYE PENETRANT SHALL CONTAIN NO CHLORIDES

5. CHROME PLATE PER QQ-C-320 CLASS 2B .0002-.0005 THICK. DIMENSIONAL LIMITS & SURFACE FINISH REQUIREMENTS APPLY AFTER PLATING

4. MATERIAL: ASTM-A351-65-SPI-1

3. SURFACE TO BE HARDFACED WITH HAYNES STELLITE #6 ALLOY PER CENPD SPEC. 2946-164-2. AFTER HARDFACING THE COMPONENT SHALL BE HEAT TREATED AT 1950°F IN AN INERT ATMOSPHERE FOR TWO HOURS & FAST AIR COOLED AT 50°F PER MIN. OR FASTER.

2. PRODUCT TO BE IN ACCORDANCE WITH CENPD SPEC 23866-16-10-1

1. DIMENSIONING & TOLERANCING PER USASI Y14.5-1966

OPPD TAG NUMBER
RC-1
RC-7A

E-23866-164-017
06

FORT CALHOUN STATION
PRODUCTION ENGINEERING DIVISION
REV. SH. 34446
FILE 1518
APVD HP 4-18-62
REV 1

EA-FC-00-134 DF 12/01

OMAHA PUBLIC POWER DISTRICT
FORT CALHOUN UNIT NO. 1

REV.	DESCRIPTION	BY & DATE	CHK. & DATE	ENG. APVD
04	CERTIFIED FOR CONSTRUCTION PER REV REQ. 23866-187	PJR 10-15-68	10-14-68	
03	ITEM #6, WAS 1/2 DIA PER REV REQ. 23866-276	PJR 6-26-67	PJR 6-26-67	
02	1) ITEMS 1, 2 & 3 REMOVED 2-1-12UN-2A THD (B) ADDED SECT. B-B (2) ITEM 1, DELETED 5/8 DIA THRU TYP 4 PLACES (3) ITEM 1, ADDED 1/4 DIA THRU (6) S/M, DELETED ITEM 12 PER REV REQ 23866-384	Rogers 1/4/69		

REV.	DESCRIPTION	BY & DATE	CHK. & DATE	ENG. APVD
01	1) REMOVED NOTE B. 2) ITEM NO. 8 & 11 IN B.M. MATERIAL REF WAS NOTE 8. 3) ZONE E-5 WAS 5/32 REVISED PER REV REQUEST 23866-73	J.C. 4-25-68	5-16-68	11/11/68
02	1) ITEM NO 5 WAS 0.005 TIR PER REV. REQ. 23866-82	PJR 10/25/68	10-25-68	11/11/68
03	1) & 2) ZONES G-6 & G3 SUPPORT COLUMNS REVISED PER REV REQ 23866-109	WAS 7-17-68	PJR 7-17-68	7-17-68

TOLERANCES UNLESS OTHERWISE SPECIFIED

DIMENSIONS	UNDER 6	6-18	OVER 18
DECIMAL DIMS.	±.005	±.005	±.010
FRACTIONAL DIMS.	±1/64	±1/32	±1/16
FINISH (√)-AA-125 MICRO IN.		ANGLES ±1/2°	
THREADS-UNIFIED CL-2A-2B		CHAMFER ±5°	
BREAK CORNERS-1/64 MAX. RAD. OR CHAMFER			
FILLETS-1/64 TO 1/32 RADIUS			
DIMENSION IN INCHES BASED ON 68°F (20°C)			

NEXT ASSY:
FINAL ASSY:
SUPERSEDES:
SUPERSEDED:
DO NOT SCALE D'W'G. CALC. WT.:
SCALE: AS NOTED ACT. WT.:

THIS DRAWING IS THE PROPERTY OF COMBUSTION ENGINEERING, INC. NUCLEAR WINDSOR, CONNECTICUT AND IS NOT TO BE REPRODUCED, OR USED TO FURNISH ANY INFORMATION FOR MAKING OF DRAWINGS OR APPARATUS EXCEPT WHERE PROVIDED FOR BY AGREEMENT WITH SAID COMPANY.

PREPARED UNDER AEC CONTRACT
CENPD CONTRACT 23866

DRAWN BY:	M. SHARO	12-20-67
CHECKER:		1-2-68
APPROVALS:		5-14-68
		6-3-68
		1-1-68
		5-7-68
		5-7-68

CORE SUPPORT BARREL DETAILS

E-23866-164-017 06
SHEET OF REV.

ALL ITEMS DEPICTED ON THIS DRAWING ARE WITHIN LICENSE RENEWAL SCOPE.

FOR INFORMATION ONLY

NOTE: THIS PRINT IS TO BE USED FOR THE FCS LICENSE RENEWAL PROJECT ONLY. IT MAY NOT REFLECT THE MOST CURRENT REVISION OF THIS DRAWING.