BILL OF MATERIALS
QUANTITIES ARE FOR

GROUP NO. & QUANTITY 6	5	4	3	2	1	ITEM NO.	NAME	PIECE NO.	MATERIAL	REMARKS
					X	1	CORE SUPPORT BARREL UPPER SECTION	E-23866-164-014-1		
					1	2	UPPER CYLINDER	-2	SEE NOTE 9	
					1	3	FLANGE	-3	SEE NOTE 8	
					2	4	NOZZLE	-4	SEE NOTE 8	

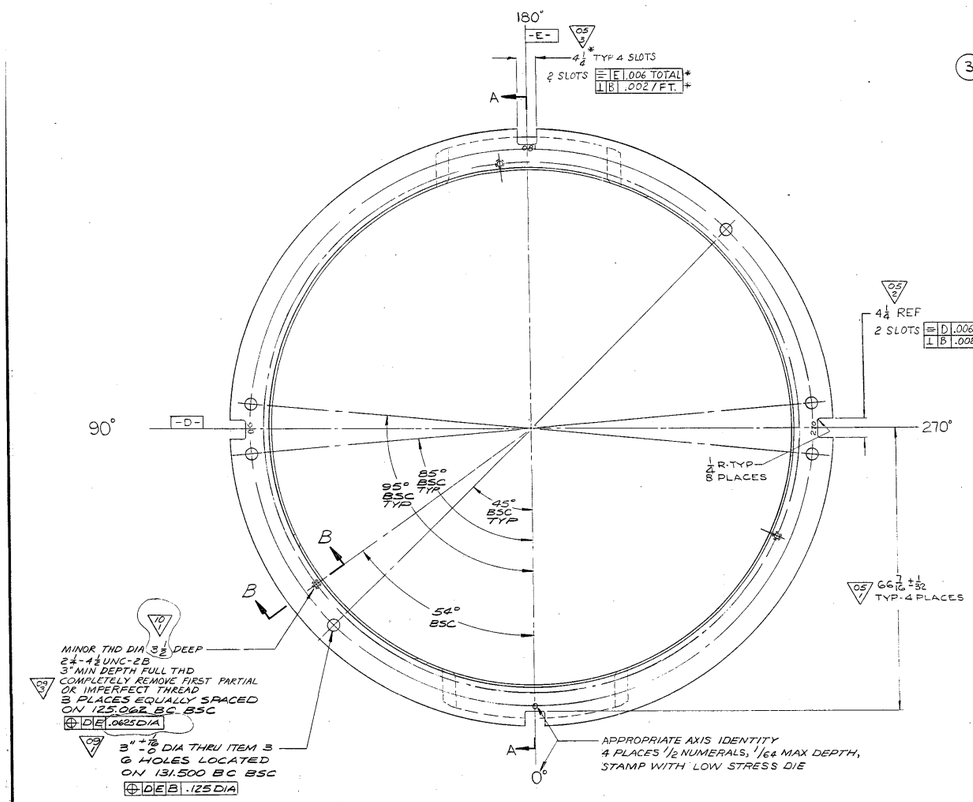

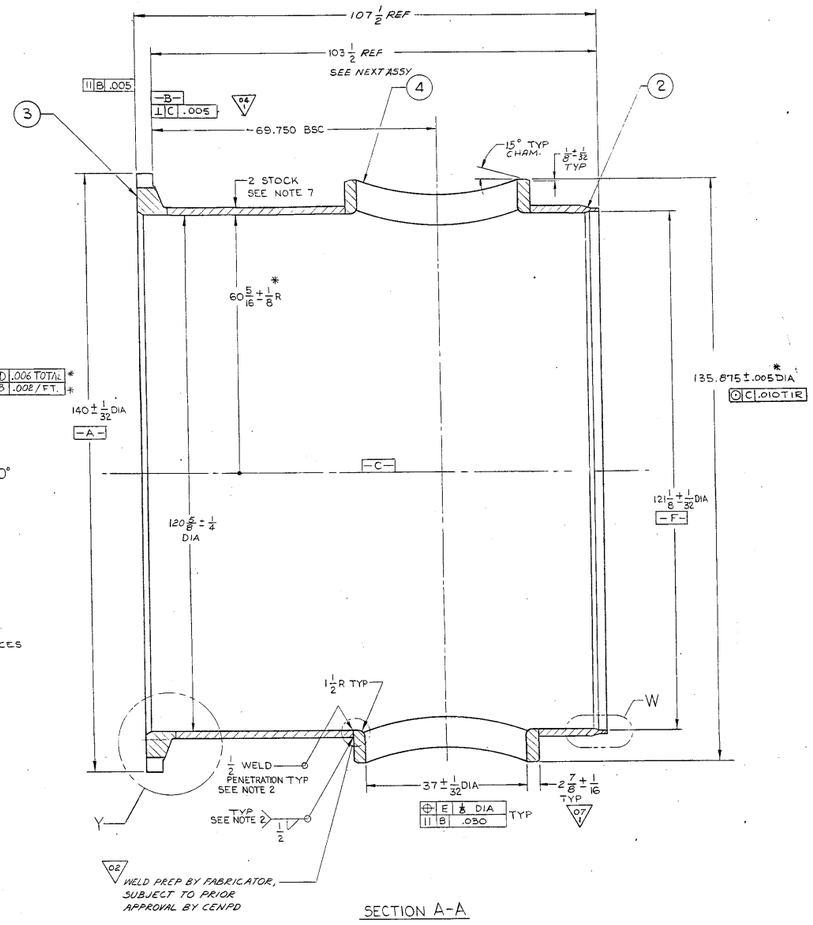

SECTION A-A

9. MATERIAL: ASTM A-240 SPI-1 TP-304 HRAP.

8. MATERIAL-ASTM-A182 SPI-1 F-304 .08 COBALT MAX, .04 CARBON MIN U.T. TESTED PER SECTION III, ASME BOILER & PRESSURE VESSEL CODE.

7. STOCK MILL TOLERANCE PER SECT II, ASME BOILER & PRESSURE VESSEL CORE.

6. ALL DIMENSIONS SHOWN ARE FINISHED DIMENSIONS, AND DO NOT INCLUDE ALLOWANCES FOR MACHINING, WELDING, OR SUBSEQUENT ASSEMBLY.

5. DIMENSIONING AND TOLERANCING PER USASI Y14.5-1966

4. ALL MACHINED DIAS. ON A COMMON AXIS MUST BE ⊙ .010 TIR UNLESS OTHERWISE NOTED

3. * INDICATES AS BUILT DIMENSIONS ARE TO BE RECORDED PER CENPD SPEC 23866-16-40-1.

2. PRODUCT TO BE IN ACCORDANCE WITH CENPD SPEC 23866-16-40-1.

1. CENTERLINE -C- IS DEFINED AS PASSING THRU THE TRUE CENTERS OF DIAMETERS -A- & -F-. DATUMS -D- & -E- ARE DEFINED AS PERPENDICULAR PLANES WHOSE POINT OF INTERSECTION PASSES THRU -C-.

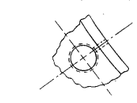

VIEW X
SCALE: QUARTER SIZE

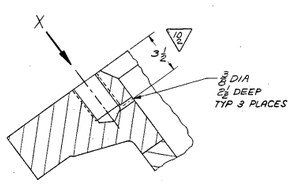

SECTION B-B
SCALE: QUARTER SIZE

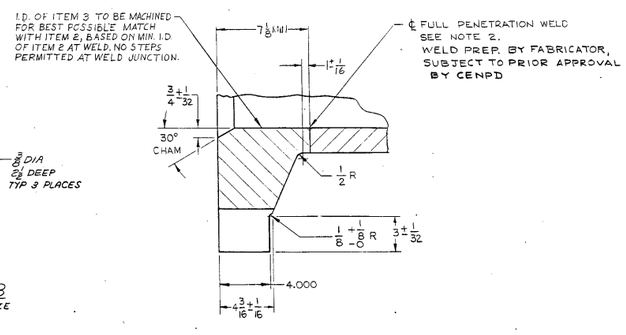

DETAIL Y
SCALE: QUARTER

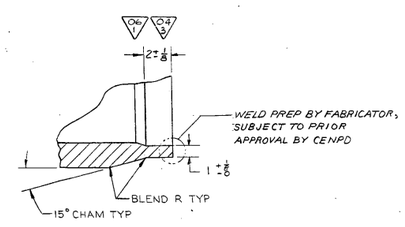

DETAIL W
SCALE: QUARTER

OPPD TAG NUMBER
RC-1
RC-7A

E-23866-164-014
10

OPPD FORT CALHOUN STATION PRODUCTION ENGINEERING DIVISION
REV. SH. 15969 APVD. Lm 4-18-96 REV. 1
FILE 1517

EA-FC-00-XXX DF 12/01

OMAHA PUBLIC POWER DISTRICT
FORT CALHOUN UNIT NO. 1

REV.	DESCRIPTION	BY & DATE	CHK. & DATE	ENG. APPD	PROJ. APPD
10	1) ZONE E-8, WAS 3 1/8 DEEP, & TRUE POSITION TOL. WAS .125 DIA. (2) SECT. B-B, WAS 3 1/4. PER REV REQ. 23866-384	PJR 6-18-96	[illegible]	[illegible]	[illegible]
09	1) IN PLAN VIEW: ADDED THREE 2 1/4-4 1/2 UNC-2B HOLES & SIX 3" DIA HOLES & RELATED DIMENSIONS PER REV REQ 23866-236 2) ADDED 1/8 DIA HOLES PER SECTION B-B 3) ZONE E-8: ADDED REF TO THD REMOVAL & REMOVED REF TO CSK PER REV REQ 23866-242	[illegible] 1-6-95	[illegible] 1-6-95	[illegible] 1-6-95	[illegible]

REV.	DESCRIPTION	BY & DATE	CHK. & DATE	ENG. APPD
05	1) ZONE E-5 WAS 66 1/2 2) ZONE F-5 WAS 4 3) ZONE G-7 WAS 4 PER REV. REQ. 23866-72	D.W. 6-5-88	[illegible] 6-5-88	[illegible]
06	1) ZONE C-8 WAS 3 1/8 PER REV REQ 23866-77	L.J. 1-23-89	PJR 1-23-89	[illegible]
07	1) WAS 3 7/16 PER REV REQ 23866-82	WAS 5-15-89	[illegible] 5-15-89	[illegible]
08	CERTIFIED FOR CONSTRUCTION PER REV. REQ. 23866-187	PJR 10-15-90	[illegible] 10-15-90	[illegible]

REV.	DESCRIPTION	BY & DATE	CHK. & DATE	ENG. APPD
01	GENERALLY REVISED AS PER REV. REQUEST 23866-23	J.J.H. 11-6-68	[illegible] 11-6-68	[illegible]
02	ADDED "WELD PREP BY FABRICATOR" NOTE IN ZONE 4D PER REV REQUEST 23866-32	WAS 11-16-68	[illegible] 11-16-68	[illegible]
03	GENERALLY REVISED PER REV REQUEST 23866-40	[illegible] 1-30-81	PJR 1-31-81	[illegible]
04	1. ZONE G5: ADDED GEOMETRIC TOLERANCE & REVISED NOTE 1 (3) DETAIL W: 3" WAS 5" PER REV. REQ. 23866-45	J.J.H. 2-5-68	[illegible] 2-6-68	[illegible]

TOLERANCES UNLESS OTHERWISE SPECIFIED			
DIMENSIONS	UNDER 6	6-18	OVER 18
DECIMAL DIMS.	±.005	±.005	±.010
FRACTIONAL DIMS.	±1/64	±1/32	±1/16
FINISH (√)AA-125 MICRO IN.		ANGLES ±1/2°	
THREADS-UNIFIED CL-2A-2B		CHAMFER ±5°	
BREAK CORNERS-1/64 MAX. RAD. OR CHAMFER			
FILLETS-1/64 TO 1/32 RADIUS			
DIMENSION IN INCHES BASED ON 68°F (20°C)			

NEXT ASSY: J-23866-164-013
FINAL ASSY:
SUPERSEDES:
SUPERSEDED:
DO NOT SCALE D'WG. CALC. WT.:
SCALE: AS NOTED ACT. WT.:

THIS DRAWING IS THE PROPERTY OF COMBUSTION ENGINEERING, INC. NUCLEAR WINDSOR, CONNECTICUT AND IS NOT TO BE REPRODUCED, OR USED TO FURNISH ANY INFORMATION FOR MAKING OF DRAWINGS OR APPARATUS EXCEPT WHERE PROVIDED FOR BY AGREEMENT WITH SAID COMPANY.

PREPARED UNDER ARC CONTRACT	CEND CONTRACT 23866
DRAWN BY: R. A. YOUNGS	6-12-67
CHECKER: S. Kendall PJR	12-18-67
APPROVALS: [illegible]	6-12-67
[illegible]	12-18-67
[illegible]	1-29-68
[illegible]	1-31-68
[illegible]	2-16-68

CORE SUPPORT BARREL UPPER SECTION

E-23866-164-014 10
SHEET OF REV.

ALL ITEMS DEPICTED ON THIS DRAWING ARE WITHIN LICENSE RENEWAL SCOPE.

FOR INFORMATION ONLY

NOTE: THIS PRINT IS TO BE USED FOR THE FCS LICENSE RENEWAL PROJECT ONLY. IT MAY NOT REFLECT THE MOST CURRENT REVISION OF THIS DRAWING.