BILL OF MATERIALS
QUANTITIES ARE FOR

GROUP NO. & QUANTITY 6	5	4	3	2	1	ITEM NO.	NAME	PIECE NO.	MATERIAL	REMARKS
					X	1	C.E.A. SHROUD ASSY (SINGLE)	E-23866-164-035-1		
					1	2	BASE	-2	ASTM A216-GSA 1.6.2.6	
					1	3	TUBE	-3	ASTM A216-GSA 4.4.2.6	
						4	EXTERNAL SPANNER NUT	-4	ASTM A-240-63	
						5	INTERNAL SPANNER NUT	-5	ASTM A-240-63 304.2.6	

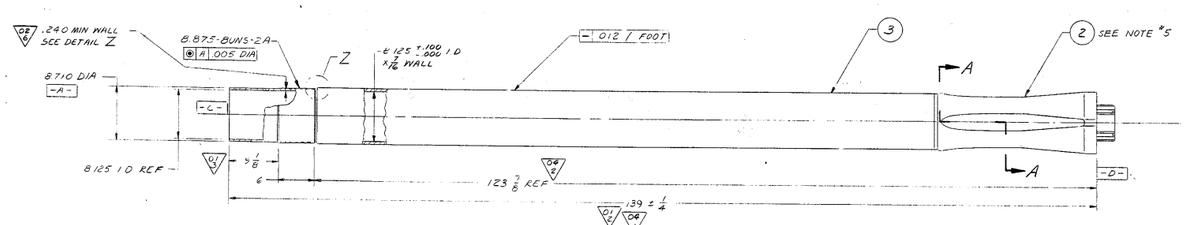

1 C.E.A. SHROUD ASSY
SCALE: EIGHTH

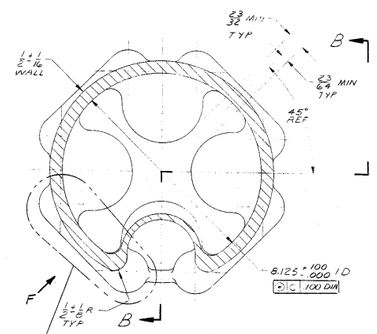

SECTION A-A
SCALE: HALF

TRANSITION REQUIREMENTS AS DENOTED IN VIEW F FALL WITHIN THIS AREA TYP

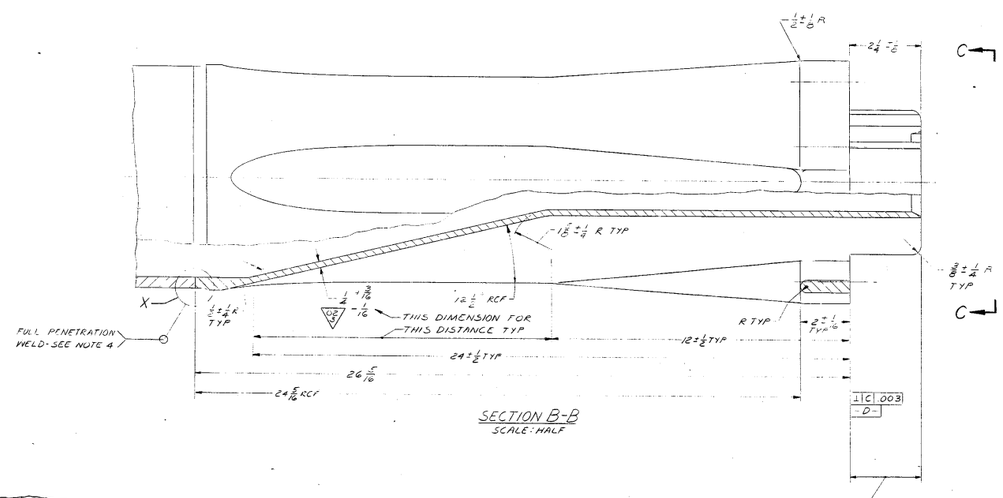

SECTION B-B
SCALE: HALF

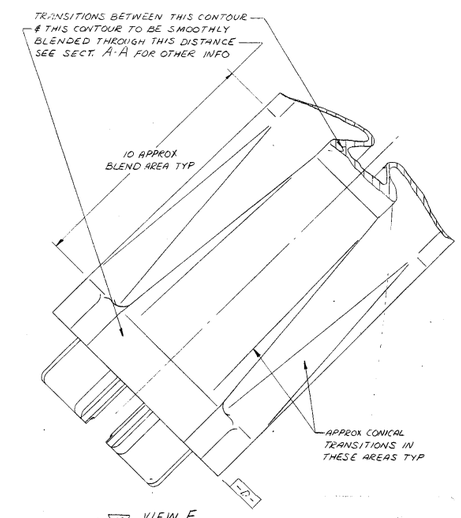

VIEW F
SCALE: HALF SIZE

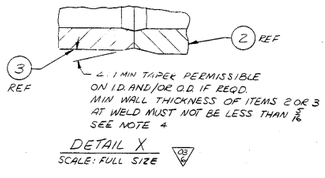

DETAIL X
SCALE: FULL SIZE

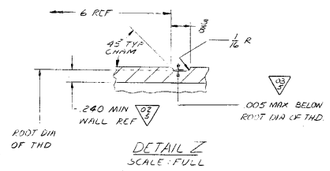

DETAIL Z
SCALE: FULL

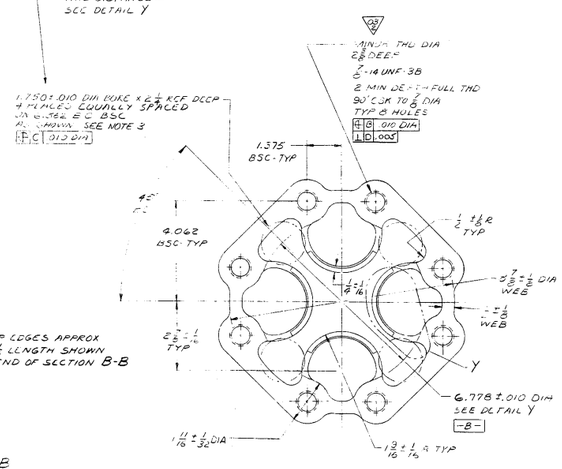

VIEW C-C
SCALE: HALF

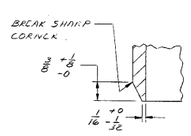

SECTION G-G
SCALE: FULL

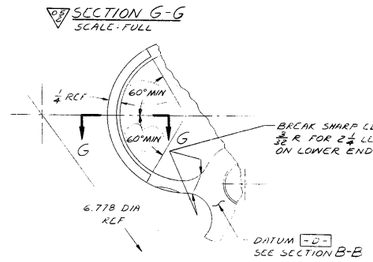

DETAIL Y
SCALE: FULL
TYP 4 PLACES

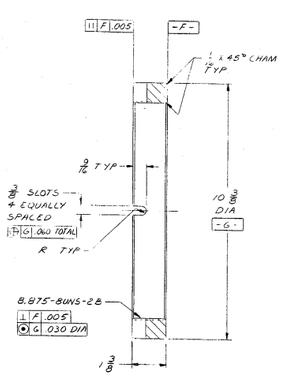

4 EXTERNAL SPANNER NUT
SCALE: HALF

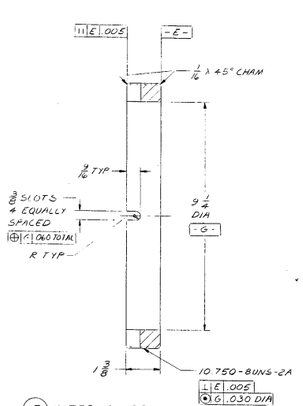

5 INTERNAL SPANNER NUT
SCALE: HALF

5. CASTING SURFACES SHALL BE 250√, ITEM 2.
4. WELD PREP SUBJECT TO APPROVAL BY CENPD NO DISCONTINUITIES PERMITTED AT WELD JUNCTION I.D. & O.D.
3. BORE MAY PENETRATE SURFACE -D- TO 1/8 MAX. DEPTH.
2. PRODUCT TO BE IN ACCORDANCE WITH CENPD SPEC 23866-16-40-1
1. DIMENSIONING & TOLERANCING PER USASI Y14.5-1966

E-23866-164-035
E-23866-164-035
05

EA-FC-00-134 DF 12/01

CERTIFIED FOR CONSTRUCTION

NOTE: THIS PRINT IS TO BE USED FOR THE FCS LICENSE RENEWAL PROJECT ONLY. IT MAY NOT REFLECT THE MOST CURRENT REVISION OF THIS DRAWING.

ALL ITEMS DEPICTED ON THIS DRAWING ARE WITHIN LICENSE RENEWAL SCOPE.

FOR INFORMATION ONLY

REV.	DESCRIPTION	BY & DATE	CHK. & DATE	ENG. APPD	PROJ. APPD
02	1) ZONE G-6: WAS 140 7/8 2) ZONE G-6: WAS 124 3/8 REF. 3) IN BLM: ITEM 3 MATL WAS ASTM A312 GR SCT 2 PER REV REQ 23866-326	CWV 4/16/68	PJA 4/16/68	JPM 4/18/68	JC 4/19/68
03	1) DETAIL Y; ADDED DIM'S FOR MACHINED LEAD-IN 2) ADDED SECTION G-G PER REV REQ 23866-544	WAS 8/6/70	[illegible] 8/6/70	[illegible] 8/7/70	[illegible] 8/7/70

REV.	DESCRIPTION	BY & DATE	CHK. & DATE	ENG. APPD
04	ITEM 3. MATL WAS SPT-2; ITEM 8. MATL WAS SPT-2 PER REV REQ. 23866-1199	PJA 10-25-68	S. Kalish 11-10-68	[illegible]
05	PER REV. REQ. 23866-005 1.) NOTE #3 ADDED (R) VIEW C-C, 3 TAPPED HOLE REVISED. (2.) ITEM #2 (CONICAL TRANSITION REVISED (A) VIEW F ADDED 3.) DETAIL Z WAS 8.720 DIA (6.) DETAIL X ADDED PER REV REQ 23866-310	PJA 6-10-73	WAS 4-18-73	[illegible] 4/18/73

REV.	DESCRIPTION	BY & DATE	CHK. & DATE	ENG. APPD
01	GENERALLY REVISED PER REV. REQ. 23866-124	W.A.S. 8-30-68	S. Kalish 9-5-68	JPM 9-5-68
02	2) ZONE G-6 - WAS 142 3/8 DIM 3) ZONE G-7 - WAS 11 3/8 DIM PER REV REQ 23866-128	W.A.S. 9-9-68	PJA 9-9-68	JPM 9-9-68
03	1) ZONE F-4 - DIM. ADDED 2) ZONE F-5 - NOTE ADDED 3) ZONE E-6 - DIM. ADDED 4) VIEW C-C - OUTER CONTOUR REVISED 5) DETAIL Z WAS .250 6) ZONE H-8 WAS .250 7) IN BLM - ITEM 2. MATL WAS SPT-2; ITEM 3. MATL WAS SPT-2	W.A.S. 10-25-68	PJA 10-25-68	JPM 10-25-68

TOLERANCES UNLESS OTHERWISE SPECIFIED			
DIMENSIONS	UNDER 6	6-18	OVER 18
DECIMAL DIMS.	±.005	±.005	±.010
FRACTIONAL DIMS	±1/64	±1/32	±1/16
FINISH (√) AA-125 MICRO IN.		ANGLES ±1/2°	
THREADS-UNIFIED: CL-2A-2B		CHAMFER ±5°	
BREAK CORNERS-1/64 MAX. RAD., OR CHAMFER			
FILLETS-1/64 TO 1/32 RADIUS			
DIMENSION IN INCHES BASED ON 68°F (20°C)			

OMAHA PUBLIC POWER DISTRICT
FORT CALHOUN UNIT NO. 1

NEXT ASSY: J-23866-164-031
FINAL ASSY:
SUPERSEDES:
SUPERSEDED:
DO NOT SCALE D'WG. CALC. WT.:
SCALE: AS NOTED ACT. WT.:

THIS DRAWING IS THE PROPERTY OF COMBUSTION ENGINEERING, INC. NUCLEAR WINDSOR, CONNECTICUT AND IS NOT TO BE REPRODUCED, OR USED TO FURNISH ANY INFORMATION FOR MAKING OF DRAWINGS OR APPARATUS EXCEPT WHERE PROVIDED FOR BY AGREEMENT WITH SAID COMPANY.

PREPARED UNDER AEC CONTRACT	CEND CONTRACT
	23866

DRAWN BY: W. SHARD	8-17-68	
CHECKED: A. Gaw	8-26-68	
APPROVALS: [illegible]	8-30-68	
[illegible]	8-30-68	
[illegible]	8-30-68	
[illegible]	8-30-68	
[illegible]	8-30-68	

CONTROL ELEMENT SHROUD ASSY (SINGLE)

E-23866-164-035 | 05
SHEET OF REV.

REF. LAYOUT SE 23866-160-088

11035

8 7 6 5 4 3 2