BILL OF MATERIALS — QUANTITIES ARE FOR ONE									
GROUP NO. & QUANTITY						ITEM NO.	NAME	PIECE NO.	MATERIAL / REMARKS
6	5	4	3	2	1				
					X	1	C.E.A. SHROUD ASSY (DUAL)	E-23866-164-040	
					1	2	BASE	-2	ASTM A216-WCA 8"x7"
					X2 REQ	3	TUBE	-3	ASTM A240-TS 8"x7"x3/8
					6	4	BRACE	-4	ASTM A216-WCA 5"x4"x1/2

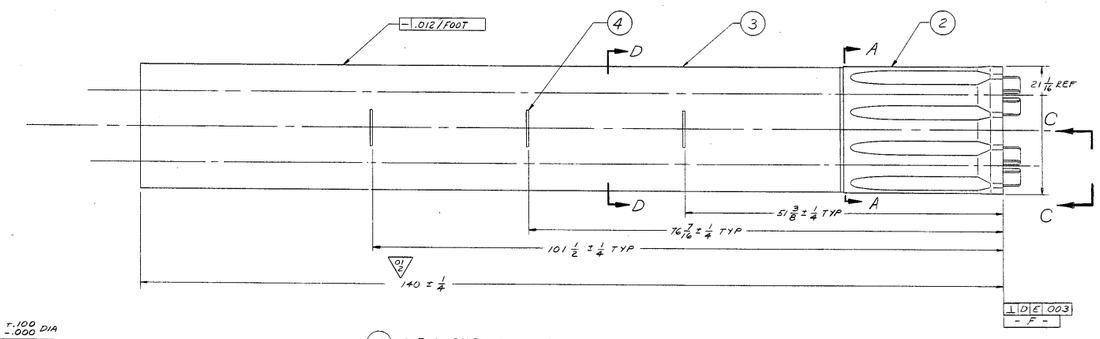

1 C.E.A. SHROUD ASSY
SCALE: EIGHTH

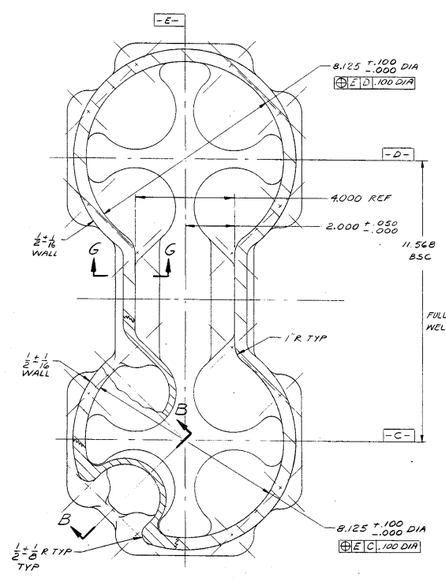

SECTION A-A
SCALE: HALF

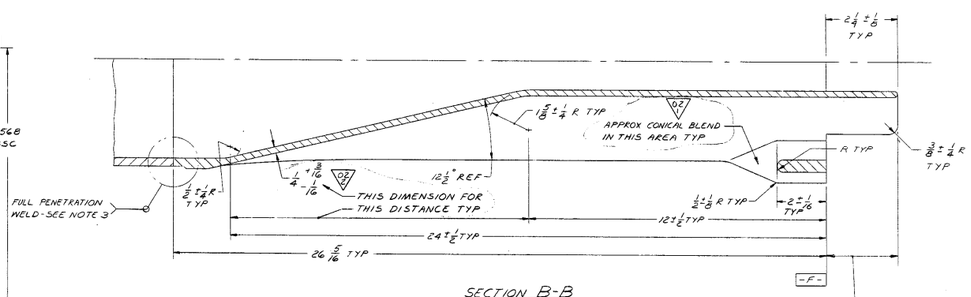

SECTION B-B
SCALE HALF

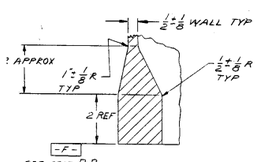

SECTION G-G
SCALE: HALF

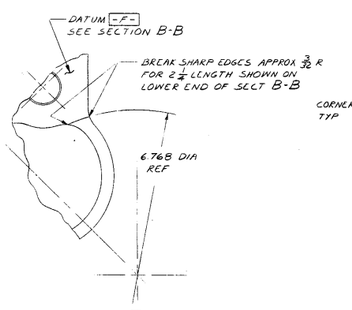

DETAIL Z
SCALE: FULL

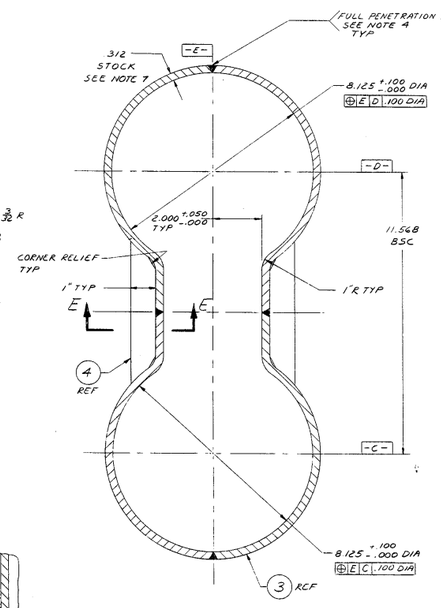

SECTION D-D
SCALE: HALF

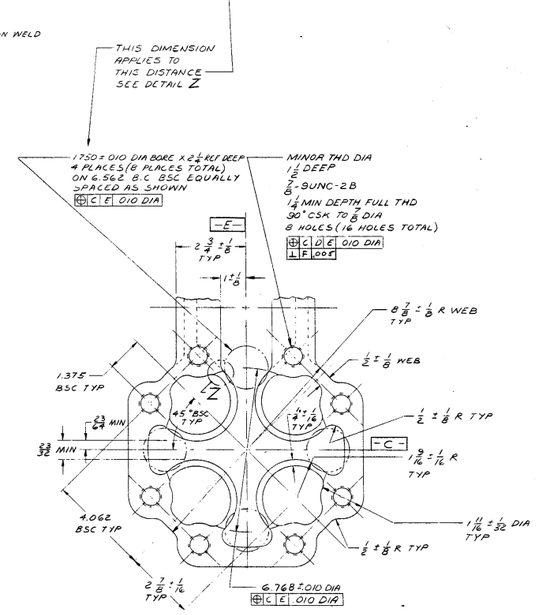

SECTION C-C TYP
SCALE: HALF

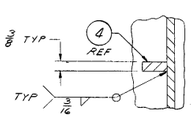

SECTION E-E
SCALE: HALF

7. STOCK MILL TOLERANCE PER SECT. II OF THE ASME BOILER & PRESSURE VESSEL CODE
6. DATUM PLANES -C- & -D- ARE PERPENDICULAR TO DATUM PLANE -E-
5. CASTING SURFACES SHALL BE 250
4. ITEM 3 MAY BE FABRICATED FROM 1,2,OR 4 SEGMENTS AND WELDED AT INDICATED LOCATION
3. WELD PREP SUBJECT TO APPROVAL BY CENPD. NO DISCONTINUITIES WILL BE PERMITTED AT WELD JUNCTION I.D. & O.D.
2. PRODUCT TO BE IN ACCORDANCE WITH CENPD SPEC 23866-16-40-1
1. DIMENSIONING & TOLERANCING PER USASI Y14.5-1966

E-23866-164-040
E-23866-164-040 02

EA-FC-00-134 DF 12/01

CERTIFIED FOR CONSTRUCTION

NOTE: THIS PRINT IS TO BE USED FOR THE FCS LICENSE RENEWAL PROJECT ONLY. IT MAY NOT REFLECT THE MOST CURRENT REVISION OF THIS DRAWING.

ALL ITEMS DEPICTED ON THIS DRAWING ARE WITHIN LICENSE RENEWAL SCOPE.

FOR INFORMATION ONLY

REV.	DESCRIPTION	BY & DATE	CHK. & DATE	ENG. APPR.
02	PER REV. REQ 23866-205	RJA 10-12-68	S.R. 10-12-68	RTW 10-12-68

REV.	DESCRIPTION	BY & DATE	CHK. & DATE	ENG. APPR.
03	1) GENERALLY REVISED PER REV REQ 23866-124	W.A.S. 8-31-68	9-9-68	9-9-68
	2) ZONE G-6 - WAS 15 5/16 DIM PER REV REQ 23866-128	W.A.S. 9-9-68	RJA 9-9-68	9-9-68
02	1) ZONE F-4 - NOTE ADDED 2) ZONE E-6 - DIM. ADDED 3) SECT. G-G - 2 INCH BLEND AREA ADDED 4) SECT. C-C - OUTER CONTOUR REVISED 5) IN B&M - ITEM 2 MATL WAS SPI-2, ITEM 3 MATL WAS SPI-2, ITEM 4 MATL WAS SPI-2 PER REV REQ 23866-199	W.A.S. 10-22-68	DJB 10-22-68	10-22-68

TOLERANCES UNLESS OTHERWISE SPECIFIED			
DIMENSIONS	UNDER 6	6-18	OVER 18
DECIMAL DIMS.	±.005	±.005	±.010
FRACTIONAL DIMS.	±1/64	±1/32	±1/16
FINISH (√)-AA-125 MICRO IN.		ANGLES ±1/2°	
THREADS-UNIFIED CL-2A-2B		CHAMFER ±5°	
BREAK CORNERS-1/64 MAX. RAD. OR CHAMFER			
FILLETS-1/64 TO 1/32 RADIUS			
DIMENSION IN INCHES BASED ON 68°F (20°C)			

NEXT ASSY: J-23866-164-031
FINAL ASSY:
SUPERSEDES:
SUPERSEDED:
DO NOT SCALE D'WG. CALC. WT.:
SCALE: AS NOTED ACT. WT.:

THIS DRAWING IS THE PROPERTY OF COMBUSTION ENGINEERING, INC. NUCLEAR WINDSOR, CONNECTICUT AND IS NOT TO BE REPRODUCED, OR USED TO FURNISH ANY INFORMATION FOR MAKING OF DRAWINGS OR APPARATUS EXCEPT WHERE PROVIDED FOR BY AGREEMENT WITH SAID COMPANY.

OMAHA PUBLIC POWER DISTRICT
FORT CALHOUN UNIT NO. 1

11504

PREPARED UNDER AEC CONTRACT	CEND CONTRACT
	23866

DRAWN BY:	W. SHARD	6-25-68
CHECKER:		7-15-68
APPROVALS:		7-15-68
		8-21-68
		8-16-68
		7-16-68

CONTROL ELEMENT SHROUD ASSY (DUAL)(ALTERNATE)

E-23866-164-040 | 02 | SHEET OF | REV.

REF LAYOUT SE-23866-110-084 SE-23866-110-099