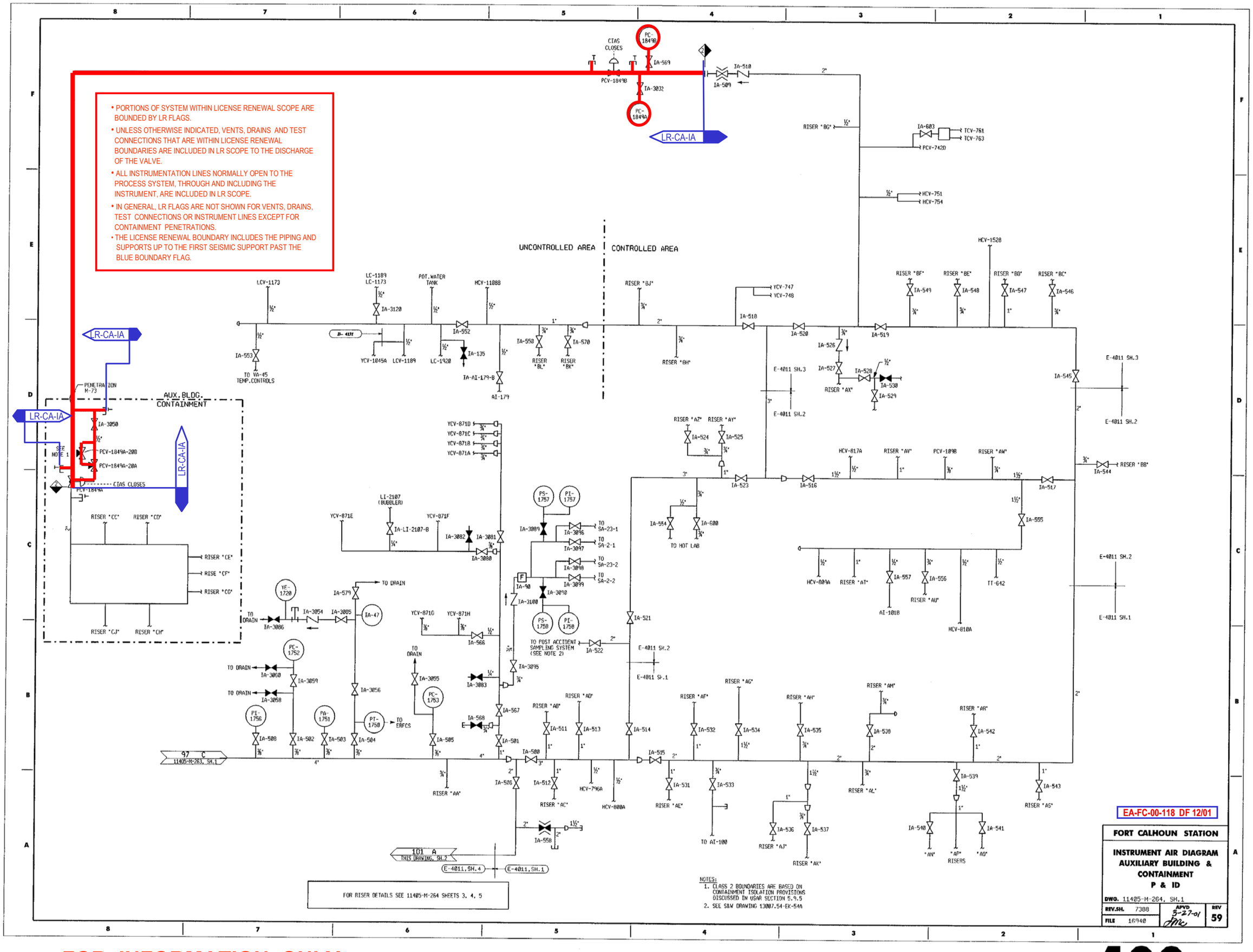

FOR INFORMATION ONLY

NOTE: THIS PRINT IS TO BE USED FOR THE FCS LICENSE RENEWAL PROJECT ONLY. IT MAY NOT REFLECT THE MOST CURRENT REVISION OF THIS DRAWING.