72-1004

TRANSNUCLEAR WEST

December 28, 2001
NUH03-01-1739

Mr. Timothy Kobetz
Spent Fuel Project Office, NMSS
U. S. Nuclear Regulatory Commission
11555 Rockville Pike M/S 0-6-F-18
Rockville, MD 20852

Subject: Non Proprietary NUHOMS® FSAR Revision 6

Dear Mr. Kobetz:

Transnuclear West Inc., herewith submits three copies of the non proprietary version of the NUHOMS® FSAR Revision 6.

Should you or your staff require additional information, please do not hesitate to contact me at 510-744-6053.

Sincerely,

U. B. Chopra
Licensing Manager

Docket 72-1004

Enclosures: As stated

A. Ltr Only

Transnuclear West Inc.
39300 Civic Center Drive, Suite 280, Fremont, CA 94538
Phone: 510-795-9800 • Fax: 510-744-6002

NMSS01 Public

ATTACHMENT

BINDER/VOLUME #:

ATTACHMENT

NUH-003
Revision 6
NUH003.0103

FINAL SAFETY ANALYSIS REPORT
FOR THE
STANDARDIZED NUHOMS®
HORIZONTAL MODULAR STORAGE SYSTEM
FOR IRRADIATED NUCLEAR FUEL

NON-PROPRIETARY REPORT

By
Transnuclear West Inc. (TN West)
Fremont, CA

October 2001

EXECUTIVE SUMMARY

This Final Safety Analysis Report (No. NUH-003, Revision 6, NRC Docket No. 72-1004) provides the generic safety analysis for the standardized NUHOMS®[1] system for storage of light water reactor spent nuclear fuel assemblies. This system provides for the safe dry storage of spent fuel in a passive Independent Spent Fuel Storage Installation (ISFSI) which fully complies with the requirements of 10CFR72 and ANSI 57.9. The related NUHOMS®-24P Topical Report (No. NUH-002, Revision 1A, NRC Project No. M-49) was approved by the U.S. Nuclear Regulatory Commission on April 21, 1989. The original NUHOMS®-07P Topical Report (No. NUH-001, Revision 1A, NRC Project No. M-39) was approved by the U.S. Nuclear Regulatory Commission on March 28, 1986.

This Final Safety Analysis Report (FSAR) formed the basis for generic NRC certification of the standardized NUHOMS® system and will be used by 10CFR50/10CFR72 general license holders in accordance with 10CFR72 Subparts K and L. It is also suitable for reference in 10CFR72 site specific license applications. In January 1995, the USNRC issued a generic Certificate of Compliance to VECTRA for the standardized NUHOMS® canister/module horizontal cask storage system. The Nuclear Regulatory Commission staff does not intend to repeat the review in order to authorize the use of a standardized NUHOMS® ISFSI by a general license holder.

The principal features of the standardized NUHOMS® system which differ from the previously approved NUHOMS®-24P system are:

1. A free-standing prefabricated horizontal storage module founded on an ISFSI basemat which is not important to safety.

2. A standardized dry shielded canister for on-site dry storage and eventual off-site shipment of spent PWR or BWR fuel assemblies.

3. Removal of site specific dependencies to allow direct implementation by 10CFR72 general license holders.

4. Design qualification for five-year cooled PWR and BWR spent fuel.

[1] NUHOMS® is a registered trademark of Transnuclear West Inc.

The NUHOMS® system provides long-term interim storage for spent fuel assemblies which have been out of the reactor for a sufficient period of time and which comply with the criteria set forth in this FSAR. The fuel assemblies are confined in a helium atmosphere by a canister containment pressure vessel. The canister is protected and shielded by a massive reinforced concrete module. Decay heat is removed from the canister and the concrete module by a passive natural draft convection ventilation system.

The canisterized spent fuel assemblies are transferred from the plant's spent fuel pool to the concrete storage modules located at the ISFSI in a transfer cask. The cask is aligned with the storage module and the canister is inserted into the module by means of a hydraulic ram. The NUHOMS® system is a totally passive installation that is designed to provide shielding and safe confinement of spent fuel for a range of postulated accident conditions and natural phenomena. As a condition of the USNRC Certificate of Compliance, temperature monitoring of the concrete module is required.

Revision 4A of this FSAR consists of a revision to the previously submitted report and incorporates the conditions of use specified by the Certificate and USNRC's Safety Evaluation Report that were not included in earlier revisions, along with revisions to reflect design modifications and utility comments.

Revision 5 of this FSAR incorporates all design modifications and supporting analysis implemented per Condition 9 of USNRC Certificate of Compliance (CoC) since issuance of Revision 4A. It also incorporates changes due to approval of Amendments 1 and 2 to the CoC.

Revision 6 of this FSAR incorporates all design modifications implemented per Condition 9 of CoC 1004 since issuance of FSAR Revision 5. It also incorporates changes implemented under CoC Amendment No. 3.

TABLE of CONTENTS

Page

EXECUTIVE SUMMARY ii

TABLE OF CONTENTS iv

LIST OF TABLES xiv

LIST OF FIGURES xix

LIST OF ABBREVIATIONS xxiii

1. INTRODUCTION AND GENERAL DESCRIPTION OF INSTALLATION 1.1-1
   - 1.1 Introduction 1.1-3
   - 1.2 General Description of Installation 1.2-1
     - 1.2.1 Arrangement of Major Structures and Equipment 1.2-1
     - 1.2.2 Principal Design Criteria 1.2-2
     - 1.2.3 Operating and Fuel Handling Systems 1.2-3
     - 1.2.4 Safety Features 1.2-3
     - 1.2.5 Radioactive Water and Auxiliary Systems 1.2-4
     - 1.2.6 Principal Characteristics of the Site 1.2-4
   - 1.3 General Systems Description 1.3-1
     - 1.3.1 Storage Systems Descriptions 1.3-1
       - 1.3.1.1 Dry Shielded Canister 1.3-1
       - 1.3.1.2 Horizontal Storage Module 1.3-2
     - 1.3.2 Transfer Systems Descriptions 1.3-3
       - 1.3.2.1 On-Site TC 1.3-3
       - 1.3.2.2 Transfer Equipment 1.3-4
     - 1.3.3 System Operation 1.3-5
     - 1.3.4 Arrangement of Storage Structures 1.3-8
   - 1.4 Identification of Agents and Contractors 1.4-1
   - 1.5 Material Incorporated by Reference 1.5-1
   - 1.6 References 1.6-1
2. SITE CHARACTERISTICS 2.1-1
   - 2.1 Geography and Demography 2.1-1
   - 2.2 Nearby Industrial, Transportation, and Military Facilities 2.1-2
   - 2.3 Meteorology 2.1-2
   - 2.4 Surface Hydrology 2.1-2
   - 2.5 Subsurface Hydrology 2.1-3
   - 2.6 Geology and Seismology 2.1-3
3. PRINCIPAL DESIGN CRITERIA 3.1-1
   - 3.1 Purpose of Installation 3.1-1
     - 3.1.1 Material to be Stored 3.1-1
       - 3.1.1.1 Physical Characteristics 3.1-2
       - 3.1.1.2 Thermal Characteristics 3.1-2
       - 3.1.1.3 Radiological Characteristics 3.1-3
     - 3.1.2 General Operating Functions 3.1-3

TABLE of CONTENTS

(Continued)

Page

3.1.2.1 Handling and Transfer Equipment 3.1-4
3.1.2.2 Waste Processing, Packaging and Storage Areas 3.1-6

3.2 Structural and Mechanical Safety Criteria 3.2-1
3.2.1 Tornado and Wind Loadings 3.2-1
3.2.1.1 Applicable Design Parameters 3.2-1
3.2.1.2 Determination of Forces on Structures 3.2-2
3.2.1.3 Ability of Structures to Perform 3.2-3
3.2.2 Water Level (Flood) Design 3.2-4
3.2.3 Seismic Design Criteria 3.2-4
3.2.4 Snow and Ice Loads 3.2-5
3.2.5 Load Combination and Structural Design Criteria 3.2-5
3.2.5.1 Horizontal Storage Module 3.2-5
3.2.5.2 Dry Shielded Canister 3.2-6
3.2.5.3 On-site Transfer Cask 3.2-7

3.3 Safety Protection System 3.3-1
3.3.1 General 3.3-1
3.3.2 Protection by Multiple Confinement Barriers and Systems 3.3-1
3.3.2.1 Confinement Barriers and Systems 3.3-1
3.3.2.2 Ventilation - Offgas 3.3-3
3.3.3 Protection by Equipment and Instrumentation Selection 3.3-3
3.3.3.1 Equipment 3.3-3
3.3.3.2 Instrumentation 3.3-3
3.3.4 Nuclear Criticality Safety 3.3-3
3.3.4.1 NUHOMS®-24P DSC Criticality Safety 3.3-4
3.3.4.2 NUHOMS®-52B DSC Criticality Safety 3.3-18
3.3.4.3 Criticality Analysis Methods (NUHOMS®-52B) 3.3-21
3.3.4.4 NUHOMS®-61BT DSC Criticality Safety 3.3-30
3.3.4.5 NUHOMS®-24PT2 DSC Criticality Safety 3.3-30
3.3.5 Radiological Protection 3.3-30
3.3.5.1 Access Control 3.3-30
3.3.5.2 Shielding 3.3-31
3.3.5.3 Radiological Alarm Systems 3.3-31
3.3.6 Fire and Explosion Protection 3.3-32
3.3.7 Materials Handling and Storage 3.3-33
3.3.7.1 Spent Fuel Handling and Storage 3.3-33
3.3.7.2 Radioactive Waste Treatment 3.3-35
3.3.7.3 On-site Waste Storage 3.3-35
3.3.8 Industrial and Chemical Safety 3.3-35

3.4 Classification of Structures, Components, and Systems 3.4-1
3.4.1 Dry Shielded Canister 3.4-1
3.4.2 Horizontal Storage Module 3.4-1
3.4.3 ISFSI Basemat and Approach Slabs 3.4-2
3.4.4 Transfer Equipment 3.4-2
3.4.4.1 Transfer Cask and Yoke 3.4-2

TABLE of CONTENTS

(Continued)

Page

3.4.4.2 Other Transfer Equipment 3.4-2
3.4.5 Auxiliary Equipment 3.4-3
3.5 Decommissioning Considerations 3.5-1
3.6 References 3.6-1
4. INSTALLATION DESIGN 4.1-1
4.1 Summary Description 4.1-1
4.1.1 Location and Layout of Installation 4.1-1
4.1.2 Principal Features 4.1-2
4.2 Storage Structures 4.2-1
4.2.1 Structural Specifications 4.2-1
4.2.2 Installation Layout 4.2-2
4.2.3 Individual Unit Description 4.2-2
4.2.3.1 Dry Shielded Canister 4.2-2
4.2.3.2 The Horizontal Storage Module 4.2-5
4.2.3.3 On-Site Transfer Cask 4.2-9
4.3 Auxiliary Systems 4.3-1
4.3.1 Ventilation Systems 4.3-1
4.3.1.1 Off-Gas Systems 4.3-1
4.3.2 Electrical Systems 4.3-1
4.3.3 Air Supply System 4.3-1
4.3.4 Steam Supply and Distribution System 4.3-1
4.3.5 Water Supply System 4.3-1
4.3.6 Sewage Treatment System 4.3-2
4.3.7 Communications and Alarm System 4.3-2
4.3.8 Fire Protection System 4.3-2
4.3.9 Maintenance Systems 4.3-2
4.3.10 Cold Chemical Systems 4.3-2
4.3.11 Air Sampling System 4.3-2
4.3.12 Instrumentation 4.3-3
4.4 Decontamination System 4.4-1
4.4.1 Equipment Decontamination 4.4-1
4.4.2 Personnel Decontamination 4.4-1
4.5 Transfer Cask and Lifting Hardware Repair and Maintenance 4.5-1
4.5.1 Routine Inspection 4.5-1
4.5.2 Annual Inspection 4.5-1
4.6 Cathodic Protection 4.6-1
4.7 Fuel Handling Operation Systems 4.7-1
4.7.1 Structural Specifications 4.7-1
4.7.2 Installation Layout 4.7-1
4.7.2.1 Building Plans 4.7-1
4.7.2.2 Building Sections 4.7-2
4.7.2.3 Confinement Features 4.7-2

TABLE of CONTENTS

(Continued)

Page

4.7.3 Individual Unit Descriptions 4.7-2
4.7.3.1 Fuel/Reactor Building Equipment 4.7-2
4.7.3.2 Transfer Cask 4.7-5
4.7.3.3 Transport Cask Lifting Yoke 4.7-7
4.7.3.4 Transport Trailer 4.7-7
4.7.3.5 Skid Positioning System 4.7-8
4.7.3.6 Hydraulic Ram System 4.7-9
4.7.3.7 Ram Support Assembly 4.7-10
4.7.3.8 Cask Support Skid 4.7-10
4.7.4 Transfer Equipment 4.7-10
4.7.4.1 Transfer Cask and Lifting Yoke 4.7-10
4.7.4.2 Transfer System Equipment 4.7-11

4.8 ASME Code Exceptions List for the NUHOMS®-24P, (Standard and Long Cavity), 24PT2 and 52B DSC 4.8-1

4.9 ASME Code Exceptions List for the Transfer Cask 4.9-1

4.10 References 4.10-1

5. OPERATION SYSTEMS 5.1-1

5.1 Operation Description 5.1-1
5.1.1 Narrative Description 5.1-2
5.1.1.1 Preparation of the Transfer Cask and DSC 5.1-2
5.1.1.2 DSC Fuel Loading 5.1-3
5.1.1.3 DSC Drying and Backfilling 5.1-5
5.1.1.4 DSC Sealing Operations 5.1-8
5.1.1.5 Transfer Cask Downending and Transport to ISFSI 5.1-9
5.1.1.6 DSC Transfer to the HSM 5.1-10
5.1.1.7 Monitoring Operations 5.1-11
5.1.1.8 DSC Retrieval from the HSM 5.1-12
5.1.1.9 Removal of Fuel from the DSC 5.1-13
5.1.2 Process Flow Diagram 5.1-18
5.1.3 Identification of Subjects for Safety Analysis 5.1-18
5.1.3.1 Criticality Control 5.1-18
5.1.3.2 Chemical Safety 5.1-18
5.1.3.3 Operation Shutdown Modes 5.1-18
5.1.3.4 Instrumentation 5.1-19
5.1.3.5 Maintenance Techniques 5.1-19

5.2 Fuel Handling Systems 5.2-1
5.2.1 Spent Fuel Handling and Transfer 5.2-1
5.2.1.1 Function Description 5.2-1
5.2.1.2 Safety Features 5.2-2
5.2.2 Spent Fuel Storage 5.2-3
5.2.2.1 Safety Features 5.2-3

5.3 Other Operating Systems 5.3-1
5.3.1 Operating System 5.3-1

TABLE of CONTENTS

(Continued)

Page

5.3.2 Component/Equipment Spares 5.3-1

5.4 Operation Support System 5.4-1

5.4.1 Instrumentation and Control System 5.4-1

5.4.2 System and Component Spares 5.4-1

5.5 Control Room and/or Control Areas 5.5-1

5.6 Analytical Sampling 5.6-1

5.7 References 5.7-1

6. WASTE CONFINEMENT AND MANAGEMENT 6-1

6.1 Waste Sources 6-1

6.2 Offgas Treatment and Ventilation 6-1

6.3 Liquid Waste Treatment and Retention 6-1

6.4 Solid Wastes 6-1

6.5 Radiological Impact of Normal Operations - Summary 6-1

7. RADIATION PROTECTION 7.1-1

7.1 Ensuring That Occupational Radiation Exposures Are As-Low-As-Reasonably-Achievable (ALARA) 7.1-1

7.1.1 Policy Considerations 7.1-1

7.1.2 Design Considerations 7.1-1

7.1.3 Operational Considerations 7.1-2

7.2 Radiation Sources 7.2-1

7.2.1 Characterization of Sources 7.2-1

7.2.2 Airborne Radioactive Material Sources 7.2-2

7.3 Radiation Protection Design Features 7.3-1

7.3.1 Installation Design Features 7.3-1

7.3.2 Shielding 7.3-2

7.3.2.1 Radiation Shielding Design Features 7.3-2

7.3.2.2 Shielding Analysis 7.3-3

7.3.2.3 Shielding Provided by Lead Shield Plug 7.3-6

7.3.3 Ventilation 7.3-6

7.3.4 Area Radiation and Airborne Radioactivity Monitoring Instrumentation 7.3-7

7.4 Estimated On-Site Collective Dose Assessment 7.4-1

7.4.1 Operational Dose Assessment 7.4-1

7.4.2 Site Dose Assessment 7.4-1

7.5 Health Physics Program 7.5-1

7.6 Estimated Off-Site Collective Doses 7.6-1

7.6.1 Effluent and Environmental Monitoring Program 7.6-1

7.6.2 Analysis of Multiple Contribution 7.6-1

7.6.3 Estimated Dose Equivalents 7.6-1

7.6.4 Liquid Release 7.6-1

7.7 References 7.7-1

TABLE of CONTENTS

(Continued)

Page

8. ANALYSIS OF DESIGN EVENTS 8.1-1

8.1 Normal and Off-Normal Operations 8.1-1

8.1.1 Normal Operation Structural Analysis 8.1-2

8.1.1.1 Normal Operating Loads 8.1-2

8.1.1.2 Dry Shielded Canister Analysis 8.1-7

8.1.1.3 DSC Internal Basket Analysis 8.1-9

8.1.1.4 DSC Support Structure Analysis 8.1-14

8.1.1.5 HSM Loads Analysis 8.1-15

8.1.1.6 HSM Door Analyses 8.1-23

8.1.1.7 HSM Heat Shield Analysis 8.1-24

8.1.1.8 HSM Axial Retainer for DSC 8.1-24

8.1.1.9 On-Site Transfer Cask Analysis 8.1-24

8.1.2 Off-Normal Load Structural Analysis 8.1-28

8.1.2.1 Jammed DSC During Transfer 8.1-29

8.1.2.2 Off-Normal Thermal Loads Analysis 8.1-32

8.1.3 Thermal Hydraulic Analysis 8.1-33

8.1.3.1 Thermal Hydraulics of the HSM 8.1-34

8.1.3.2 Thermal Analysis of the DSC Inside the HSM 8.1-41

8.1.3.3 Thermal Analysis of the DSC Inside the Transfer Cask 8.1-45

8.2 Accident Analysis 8.2-1

8.2.1 Reduced HSM Air Inlet and Outlet Shielding 8.2-2

8.2.1.1 Cause of Accident 8.2-2

8.2.1.2 Accident Analysis 8.2-2

8.2.1.3 Accident Dose Calculations 8.2-2

8.2.1.4 Recovery 8.2-3

8.2.2 Tornado Winds/Tornado Missile 8.2-3

8.2.2.1 Cause of Accident 8.2-3

8.2.2.2 Accident Analysis 8.2-3

8.2.2.3 Accident Dose Calculation 8.2-14

8.2.2.4 Transfer Cask Missile Impact Analysis 8.2-14

8.2.3 Earthquake 8.2-14

8.2.3.1 Cause of Accident 8.2-14

8.2.3.2 Accident Analysis 8.2-14

8.2.3.3 Accident Dose Calculations 8.2-23

8.2.4 Flood 8.2-23

8.2.4.1 Cause of Accident 8.2-23

8.2.4.2 Accident Analysis 8.2-23

8.2.4.3 Accident Dose Calculations 8.2-25

8.2.4.4 Recovery 8.2-25

8.2.5 Accidental Cask Drop 8.2-26

8.2.5.1 Cause of Accident 8.2-26

8.2.5.2 Accident Analysis 8.2-28

8.2.5.3 Loss of Neutron Shield 8.2-40

8.2.5.4 Recovery 8.2-42

TABLE of CONTENTS

(Continued)

Page

8.2.6 Lightning 8.2-42
8.2.6.1 Postulated Cause of Event 8.2-42
8.2.6.2 Analysis of Effects and Consequences 8.2-42
8.2.7 Blockage of Air Inlet and Outlet Openings 8.2-43
8.2.7.1 Cause of Accident 8.2-43
8.2.7.2 Accident Analysis 8.2-43
8.2.7.3 Accident Dose Calculations 8.2-45
8.2.7.4 Recovery 8.2-45
8.2.8 DSC Leakage 8.2-45
8.2.8.1 Cause of Accident 8.2-46
8.2.8.2 Accident Analysis 8.2-46
8.2.8.3 Accident Dose Calculations 8.2-46
8.2.9 Accident Pressurization of DSC 8.2-46
8.2.9.1 Accident Analysis 8.2-46
8.2.9.2 Accident Dose Calculations 8.2-47
8.2.10 Load Combinations 8.2-47
8.2.10.1 DSC Load Combination Evaluation 8.2-47
8.2.10.2 DSC Fatigue Evaluation 8.2-48
8.2.10.3 Transfer Cask Load Combination Evaluation 8.2-48
8.2.10.4 HSM Load Combination Evaluation 8.2-48
8.2.10.5 Thermal Cycling of the HSM 8.2-49
8.2.10.6 DSC Support Structure Load Combination Evaluation 8.2-49

8.3 Site Characteristics Affecting Safety Analysis 8.3-1

8.4 References 8.4-1

9. CONDUCT OF OPERATIONS 9.1-1

9.1 Organizational Structure 9.1-1
9.1.1 Corporate Organization 9.1-1
9.1.1.1 Corporate Functions, Responsibilities and Authorities 9.1-1
9.1.1.2 Applicant's In-House Organization 9.1-1
9.1.1.3 Interrelationship with Contractors and Suppliers 9.1-1
9.1.1.4 Applicant's Technical Staff 9.1-1
9.1.2 Operating Organization, Management and Administrative Control System 9.1-2
9.1.2.1 On-Site Organization 9.1-2
9.1.2.2 Personnel Functions, Responsibilities and Authorities 9.1-2
9.1.3 Personnel Qualification Requirements 9.1-2
9.1.4 Liaison with Other Organizations 9.1-2

9.2 Pre-Operational Testing and Operation 9.2-1
9.2.1 Administrative Procedures for Conducting Test Programs 9.2-1
9.2.2 Test Program Description 9.2-1
9.2.3 Test Discussion 9.2-2

9.3 Training Program 9.3-1
9.3.1 Program Description 9.3-1

TABLE of CONTENTS

(Continued)

Page

9.3.1.1 Training for Operations Personnel 9.3-1
9.3.1.2 Training for Maintenance Personnel 9.3-1
9.3.1.3 Training for Health Physics Personnel 9.3-1
9.3.1.4 Training for Security Personnel 9.3-1
9.3.2 Retraining Program 9.3-2
9.3.3 Administration and Records 9.3-2
9.4 Normal Operations 9.4-1
9.4.1 Procedures 9.4-1
9.4.2 Records 9.4-1
9.5 Emergency Planning 9.5-1
9.6 Decommissioning Plan 9.6-1
9.7 References 9.7-1
10. OPERATING CONTROLS AND LIMITS 10-1
11. QUALITY ASSURANCE 11.1-1
11.1 Introduction 11.1-1
11.2 "Important-to-Safety" and "Safety Related" NUHOMS® System Components 11.2-1
11.3 Description of TN West 10CFR72 Subpart G Quality Assurance Program 11.3-1
11.3.1 Project Organization 11.3-1
11.3.2 Quality Assurance Program 11.3-1
11.3.3 Design Control 11.3-2
11.3.4 Procurement Document Control 11.3-2
11.3.5 Procedures, Instructions, and Drawings 11.3-2
11.3.6 Document Control 11.3-2
11.3.7 Control of Purchased Items and Services 11.3-3
11.3.8 Identification and Control of Materials, Parts, and Components 11.3-3
11.3.9 Control of Special Processes 11.3-3
11.3.10 Inspection 11.3-3
11.3.11 Test Control 11.3-4
11.3.12 Control of Measuring and Test Equipment 11.3-4
11.3.13 Handling, Storage and Shipping 11.3-4
11.3.14 Inspection and Test Status 11.3-4
11.3.15 Control of Nonconforming Items 11.3-4
11.3.16 Corrective Action 11.3-5
11.3.17 Records 11.3-5
11.3.18 Audits and Surveillances 11.3-5
11.4 Conditions of Approval Records 11.4-1

TABLE of CONTENTS

		Page
APPENDIX A	DETAILS OF SHIELDING MODELS FOR THE NUHOMS® SYSTEM	A.1
APPENDIX B	DETAILS OF HEAT TRANSFER ANALYSIS OF THE NUHOMS® SYSTEM	B.1
APPENDIX C	SUPPORTING STRUCTURAL ANALYSES	C.1
APPENDIX D	A REVIEW OF CONCRETE BEHAVIOR UNDER SUSTAINED ELEVATED TEMPERATURES	D.1
APPENDIX E	DRAWINGS FOR THE STANDARDIZED NUHOMS® SYSTEM	E.1
APPENDIX F	NUHOMS®-24P TOPICAL REPORT REVISION 1 NRC CRITICALITY QUESTION RESOLUTIONS	F.1
APPENDIX G	DELETED	G.1
APPENDIX H	NUHOMS®-24P LONG CAVITY DSC EVALUATION FOR STORING PWR FUEL WITHOUT BURNABLE POISON ROD ASSEMBLIES (BPRAs)	H.1
APPENDIX I	DELETED	I.1
APPENDIX J	EVALUATION OF BURNABLE POISON ROD ASSEMBLIES (BPRAs) FOR THE STANDARDIZED NUHOMS® 24P LONG CAVITY DSC	J.1
APPENDIX K	NUHOMS® 61BT SYSTEM	K.1-1
APPENDIX L	NUHOMS® 24PT2 DSC	L.1-1

LIST OF TABLES

		Page
Table 1.2-1	Typical NUHOMS® ISFSI Storage Capacity Expansion and Canister Loading Plan (for information only)	1.2-6
Table 1.2-2	Key Design Parameters for the Standardized NUHOMS® System	1.2-7
Table 1.2-3	NUHOMS® System Operations Overview(1), (2)	1.2-10
Table 1.2-4	Typical Plant Equipment and Materials Used for NUHOMS® DSC Loading, Closure, and Transfer Operations (for information only)	1.2-12
Table 1.3-1	Components, Structures and Equipment for the Standardized NUHOMS® System	1.3-9
Table 3.1-1	Principal Acceptance Parameters for PWR Fuel to be Stored in NUHOMS® -24P and -24PT2 DSC	3.1-7
Table 3.1-1a	PWR Fuel Assembly Designs Suitable for Storage	3.1-8
Table 3.1-2	Principal Acceptance Parameters for BWR Fuel to be Stored in NUHOMS® -52B DSC	3.1-9
Table 3.1-2a	BWR Fuel Assembly Designs Suitable for Storage in NUHOMS®-52B DSC	3.1-10
Table 3.1-3	General PWR Fuel Assembly Data(1)	3.1-11
Table 3.1-4	Deleted	3.1-12
Table 3.1-5	Deleted	3.1-12
Table 3.1-6	Deleted	3.1-12
Table 3.1-7	NUHOMS® Transfer Equipment Criteria	3.1-13
Table 3.1-8a	PWR Fuel Qualification Table for the Standardized NUHOMS®-24P and -24PT2 DSC (Fuel Without BPRAs)	3.1-14
Table 3.1-8b	BWR Fuel Qualification Table for the Standardized NUHOMS®-52B DSC	3.1-15
Table 3.1-8c	PWR Fuel Qualification Table for the Standardized NUHOMS®-24P and -24PT2 DSC (Fuel With BPRAs)	3.1-16
Table 3.2-1	Summary of NUHOMS® Component Design Loadings	3.2-8
Table 3.2-2	Design Pressures for Tornado Wind Loading	3.2-14
Table 3.2-3	Deleted	3.2-15
Table 3.2-4	HSM Ultimate Strength Reduction Factors	3.2-16
Table 3.2-5	HSM Load Combination Methodology	3.2-17
Table 3.2-6	DSC Load Combinations and Service Levels(10)	3.2-18
Table 3.2-7	On-site Transfer Cask Load Combinations and Service Levels	3.2-20
Table 3.2-8	DSC Support Structure Load Combination Methodology	3.2-21
Table 3.2-9a	Stress Design Criteria for DSC Pressure Boundary Components	3.2-22
Table 3.2-9b	Stress Design Criteria for DSC Non-Pressure Boundary Components	3.2-23
Table 3.2-10	Structural Design Criteria for DSC Support Structure	3.2-24
Table 3.2-11	Structural Design Criteria for On-Site Transfer Cask	3.2-25
Table 3.2-12	Structural Design Criteria for Bolts	3.2-26
Table 3.3-1	NUHOMS® System Components Important to Safety	3.3-36
Table 3.3-2	Radioactive Material Confinement Barriers for NUHOMS® System	3.3-37
Table 3.3-3	Design Parameters for Criticality Analysis of the NUHOMS®-24P DSC	3.3-38

LIST OF TABLES

(Continued)

		Page
Table 3.3-4	Results Summary for Reactivity Equivalence Burnup Cases Nominal Case NUHOMS®-24P DSC Model Fully Loaded with Irradiated Fuel	3.3-40
Table 3.3-5	Summary of Selected Irradiated Fuel Equivalence Calculation Results Components NUHOMS®-24P DSC	3.3-41
Table 3.3-6	Benchmark Critical Experiments	3.3-42
Table 3.3-7	CSAS2 PuO2 - UO2 Critical Experiment Benchmark Calculations(1)	3.3-44
Table 3.3-8	CSAS2/SAS2/CSMO-2E Irradiated FA Reactivity Calculations Method Validation by Comparison to CASMO-2 k_{inf} Results	3.3-45
Table 3.3-9	Axial Burnup Variation Sensitivity Results Summary -NUHOMS®-24P DSC Fully Loaded with 4 wt. % Irradiated Fuel Flooded with Pure Water	3.3-46
Table 3.3-10	Moderator Density Sensitivity Results Summary for 1.45 wt. % Non-Irradiated Fuel NUHOMS®-24P DSC	3.3-47
Table 3.3-11	DSC Criticality Analysis Summary of Final k_{eff} Result Components for Selected Points on Reactivity Equivalence Curve NUHOMS®-24P DSC	3.3-48
Table 3.3-12	NUHOMS® 52B Baseline Case Fuel Design Parameters	3.3-49
Table 3.3-13	NUHOMS® 52B DSC Nominal Basket Parameters	3.3-49
Table 3.3-14	Transfer Cask Parameters	3.3-49
Table 3.3-15	NUHOMS® 52B Analysis KENO Regional Atom Densities	3.3-50
Table 3.3-16	Summary of PNL Critical Benchmark Calculations	3.3-52
Table 3.3-17	Qualified BWR Fuel Designs(2)	3.3-57
Table 3.3-18	NUHOMS®-52B KENO Analysis Fuel Assembly Position Results	3.3-58
Table 3.3-19	NUHOMS®-52B KENO Analysis Neutron Absorber Boron Content Results	3.3-58
Table 3.3-20	NUHOMS®-52B KENO Analysis Neutron Absorber Sheet Thickness Results	3.3-59
Table 3.3-21	NUHOMS®-52B KENO Analysis Neutron Absorber Sheet Width Results	3.3-59
Table 3.3-22	NUHOMS®-52B KENO Analysis Moderator Density Results	3.3-60
Table 3.3-23	NUHOMS®-52B KENO Analysis Loss of Absorber Sheet Results	3.3-60
Table 3.3-24	NUHOMS® 52B KENO Analysis Summary of Biases and Uncertainties	3.3-61
Table 3.4-1	NUHOMS® Major Components and Safety Classification	3.4-4
Table 4.8-1	ASME Code Exceptions List for NUHOMS®-24P (Standard and Long Cavity), 24PT2 and 52B DSC Pressure Boundary Components	4.8-3
Table 4.8-2	ASME Code Exceptions List for NUHOMS®-24P (Standard and Long Cavity), 24PT2 and 52B DSC Basket Assembly	4.8-6
Table 4.9-1	ASME Code Exceptions List for the Transfer Cask (Applies to Cask Structural Components Only, Lead Shielding, Neutron Shielding, and Neutron Shield Jacket of the Cask is Not Addressed by this Table)	4.9-3

LIST OF TABLES

(Continued)

		Page
Table 5.1-1	Instrumentation Used During NUHOMS® System Loading Operations	5.1-20
Table 7.2-1	Neutron Energy Spectrum and Flux-to-Dose Conversion Factors for PWR Spent Fuel	7.2-3
Table 7.2-2	Neutron Energy Spectrum and Flux-to-Dose Conversion Factors for BWR Spent Fuel	7.2-4
Table 7.2-3	Gamma Energy Spectrum and Flux-to-Dose Conversion Factors for PWR Fuel	7.2-5
Table 7.2-4	Gamma Energy Spectra and Flux-to-Dose Conversion Factors for BWR Fuel	7.2-6
Table 7.3-1	Deleted	7.3-8
Table 7.3-2	Shielding Analysis Results for 5 Year Cooled Fuel NUHOMS®-24P System(5) (w/o BPRAs)	7.3-9
Table 7.3-3	Shielding Analysis Results for 10 Year Cooled Fuel NUHOMS®-24P System(2)	7.3-11
Table 7.3-4	Shielding Analysis Results for 5 Year Cooled Fuel NUHOMS®-52B System	7.3-12
Table 7.3-5	Shielding Analysis Results for 10 Year Cooled Fuel NUHOMS®-52B System	7.3-14
Table 7.4-1	NUHOMS® System Operations Enveloping Time for Occupational Dose Calculations	7.4-3
Table 8.1-1	NUHOMS® Normal Operating Loading Identification	8.1-49
Table 8.1-2	NUHOMS® Off-Normal Operating Loading Identification	8.1-50
Table 8.1-3	Mechanical Properties of Materials	8.1-51
Table 8.1-4	Estimated NUHOMS®-24P Component Weights	8.1-58
Table 8.1-5	Estimated NUHOMS®-52B Component Weights	8.1-59
Table 8.1-6	NUHOMS®-24P DSC Operating and Accident Pressures(5) (w/o BPRAs)	8.1-60
Table 8.1-7	NUHOMS®-52B DSC Operating and Accident Pressures	8.1-61
Table 8.1-8	Thermophysical Properties of Materials	8.1-62
Table 8.1-9	Temperature Dependent Thermophysical Properties	8.1-63
Table 8.1-10	Maximum NUHOMS®-24P DSC Stresses for Normal and Off-Normal Loads	8.1-65
Table 8.1-11	Maximum NUHOMS®-52B DSC Stresses for Normal and Off-Normal Loads	8.1-67
Table 8.1-12	Deleted	8.1-69
Table 8.1-13	Deleted	8.1-69
Table 8.1-14	Maximum DSC Support Structure Stresses for Normal and Off-Normal Loads	8.1-70
Table 8.1-15	Maximum(1) Normal and Off-Normal Loads for DSC Support Structure End Connections	8.1-71

LIST OF TABLES

(Continued)

		Page
Table 8.1-16	Maximum DSC Support Structure Vertical Displacements for Normal and Off-Normal Loads	8.1-72
Table 8.1-17	Thermal Load Case Definitions for HSM Structural Analysis	8.1-73
Table 8.1-18	Deleted	8.1-75
Table 8.1-19	Maximum HSM Reinforced Concrete Bending Moments and Shear Forces for Normal and Off-Normal Loads	8.1-76
Table 8.1-20	Maximum Standardized Transfer Cask Stresses for Normal Loads	8.1-77
Table 8.1-20a	Maximum OS197 Transfer Cask Stresses for Off-Normal Operating Loads	8.1-78
Table 8.1-20b	Maximum OS197H Transfer Cask Stresses for Normal Loads	8.1-79
Table 8.1-21	Maximum Standardized Transfer Cask Stresses for Off-Normal Operating Loads	8.1-80
Table 8.1-21a	Maximum OS197 Transfer Cask Stresses for Off-Normal Operating Loads	8.1-81
Table 8.1-21b	Maximum OS197H Transfer Cask Stresses for Off-Normal Operating Loads	8.1-82
Table 8.1-22	NUHOMS®-24P HSM Bulk Air Temperature	8.1-83
Table 8.1-23	NUHOMS®-52B HSM Bulk Air Temperature	8.1-84
Table 8.1-24	NUHOMS®-24P HSM Thermal Analysis Results Summary	8.1-85
Table 8.1-25	NUHOMS®-52B HSM Thermal Analysis Results Summary	8.1-86
Table 8.1-26	NUHOMS®-24P DSC Thermal Analysis Results Summary	8.1-87
Table 8.1-27	NUHOMS®-52B DSC Thermal Analysis Results	8.1-88
Table 8.1-28	Standardized Transfer Cask with NUHOMS®-24P DSC Thermal Analysis Results Summary	8.1-89
Table 8.1-29	Standardized Transfer Cask with NUHOMS®-52B DSC Thermal Analysis Results Summary	8.1-90
Table 8.1-29a	OS197 Transfer Cask with NUHOMS®-24P or 52B DSC Thermal Analysis Results Summary	8.1-91
Table 8.1-30	Thermal Analysis Results Summary for the HSM Support Structure: 24P and 52B Systems	8.1-92
Table 8.2-1	Postulated Accident Loading Identification	8.2-50
Table 8.2-2	Comparison of Total Dose Rates for HSM with and without Adjacent HSM Shielding Effects	8.2-51
Table 8.2-3	Maximum HSM Reinforced Concrete Bending Moments and Shear Force for Accident Loads	8.2-52
Table 8.2-4	Deleted	8.2-53
Table 8.2-5	Deleted	8.2-53
Table 8.2-6	Deleted	8.2-53
Table 8.2-7	Maximum NUHOMS®-24P DSC Stresses for Drop Accident Loads	8.2-54
Table 8.2-8	Maximum NUHOMS®-52B DSC Stresses for Drop Accident Loads	8.2-55
Table 8.2-9	Maximum Standardized Transfer Cask Stresses for Drop Accident Loads	8.2-56

LIST OF TABLES

(Continued)

		Page
Table 8.2-9a	Maximum OS197 Transfer Cask Stresses for Drop Accident Loads	8.2-57
Table 8.2-9b	Maximum OS197H Transfer Cask Stresses for Drop Accident Loads	8.2-58
Table 8.2-10	Dose at 300m from ISFSI Site Due to Release from Postulated DSC Rupture	8.2-59
Table 8.2-11	NUHOMS®-24P DSC Enveloping Load Combination Results for Normal and Off-Normal Loads (ASME Service Levels A and B)	8.2-60
Table 8.2-12	NUHOMS®-52B DSC Enveloping Load Combination Results for Normal and Off-Normal Loads (ASME Service Levels A and B)	8.2-61
Table 8.2-13	NUHOMS®-24P DSC Enveloping Load Combination Results for Accident Loads (ASME Service Level C)	8.2-62
Table 8.2-14	NUHOMS®-52B DSC Enveloping Load Combination Results for Accident Loads (ASME Service Level C)	8.2-63
Table 8.2-15	NUHOMS®-24P DSC Enveloping Load Combination Results for Accident Loads (ASME Service Level D)(3)	8.2-64
Table 8.2-16	NUHOMS®-52B DSC Enveloping Load Combination Results for Accident Loads (ASME Service Level D) (3)	8.2-65
Table 8.2-17	DSC Enveloping Load Combination Table Notes	8.2-66
Table 8.2-18	HSM Enveloping Load Combination Results	8.2-67
Table 8.2-19	DSC Support Structure Enveloping Load Combination Results	8.2-68
Table 8.2-20	DSC Support Structure Enveloping Load Combination Results Support Member End Connection Loads	8.2-70
Table 8.2-21	Standardized Transfer Cask Enveloping Load Combination Results for Normal and Off-Normal Loads (ASME Service Levels A and B)	8.2-71
Table 8.2-21a	OS197 Transfer Cask Enveloping Load Combination Results for Normal and Off-Normal Loads (ASME Service Levels A and B)	8.2-72
Table 8.2-21b	OS197 Transfer Cask Enveloping Load Combination Results for Normal and Off-Normal Loads (ASME Service Levels A and B)	8.2-73
Table 8.2-22	Standardized Transfer Cask Enveloping Load Combination Results for Normal and Off-Normal Loads (ASME Service Levels A and B)	8.2-74
Table 8.2-22a	OS197 Transfer Cask Enveloping Load Combination Results for Normal and Off-Normal Loads (ASME Service Levels A and B)	8.2-75
Table 8.2-22b	OS197H Transfer Cask Enveloping Load Combination Results for Accident Loads (ASME Service Level C)	8.2-76
Table 8.2-23	Standardized Transfer Cask Enveloping Load Combination Results for Accident Loads (ASME Service Level C)	8.2-77
Table 8.2-23a	OS197 Transfer Cask Enveloping Load Combination Results for Accident Loads (ASME Service Level C)	8.2-78
Table 8.2-24	Standardized Transfer Cask Enveloping Load Combination Results for Accident Loads (ASME Service Level D)	8.2-79
Table 8.2-24a	OS197 Transfer Cask Enveloping Load Combination Results for Accident Loads (ASME Service Level D)	8.2-80
Table 8.2-25	Expanded Load Combinations for DSC Analyses	8.2-81

LIST OF TABLES

(Continued)

		Page
Table 10-1	Index of CoC Requirements v/s Historical SAR References	10-2
Table 11.1-1	Quality Assurance Criteria Matrix	11.1-2
Table 11.2-1	Attributes to be Verified for Quality Category B Components of Horizontal Storage Module (1)	11.2-4
Table 11.2-2	Attributes to be Verified for Quality Category B Components of Onsite Transfer Cask(1)	11.2-5

LIST OF FIGURES

		Page
Figure 1.1-1	Illustration of Typical Life-of-Plant NUHOMS® ISFSI (for information only)	1.1-5
Figure 1.1-2	NUHOMS® System Components, Structures, and Transfer Equipment - Elevation View	1.1-6
Figure 1.1-3	NUHOMS® System Components, Structures, and Transfer Equipment Plan View	1.1-7
Figure 1.2-1	Standardized NUHOMS® Systems Canister Baskets for PWR and BWR Spent Fuel (for information only)	1.2-13
Figure 1.2-2	Prefabricated NUHOMS® Horizontal Storage Module (Model 102)	1.2-14
Figure 1.2-2a	Prefabricated NUHOMS® Horizontal Storage Module (Model 80)	1.2-15
Figure 1.3-1	NUHOMS® Dry Shielded Canister Assembly Components	1.3-11
Figure 1.3-1a	NUHOMS®-61BT DSC Components	1.3-12
Figure 1.3-1b	NUHOMS®-24PT2 DSC Components	1.3-13
Figure 1.3-2	NUHOMS®-24P Dry Shielded Canister Cross-Section	1.3-14
Figure 1.3-3	NUHOMS®-52B Dry Shielded Canister Cross-Section	1.3-15
Figure 1.3-4	NUHOMS® Horizontal Storage Module Arrangement	1.3-16
Figure 1.3-5	HSM Ventilation Air Flow Diagram	1.3-17
Figure 1.3-6	NUHOMS® On-Site TC	1.3-18
Figure 1.3-7	Transport Trailer for the NUHOMS® System	1.3-19
Figure 1.3-8	Cask Support Skid for the NUHOMS® System	1.3-20
Figure 1.3-9	Hydraulic Ram System for NUHOMS®	1.3-21
Figure 1.3-10	NUHOMS® System Operational Overview	1.3-22
Figure 1.3-11	Typical Double Module Row NUHOMS® ISFSI Layout	1.3-23
Figure 1.3-12	Typical Single Module Row NUHOMS® ISFSI Layout	1.3-24
Figure 1.3-13	Typical Combined Single and Double Module Row NUHOMS® ISFSI Layout	1.3-25
Figure 3.1-1	PWR Spent Fuel Pool Inventory	3.1-17
Figure 3.1-2	BWR Spent Fuel Pool Inventory	3.1-18
Figure 3.1-3	Deleted	3.1-19
Figure 3.2-1	Deleted	3.2-27
Figure 3.3-1	NUHOMS®-24P DSC and KENO Model Geometry	3.3-62
Figure 3.3-2	KENO Model for NUHOMS®-24P Fuel	3.3-63
Figure 3.3-3	NUHOMS®-24P DSC Burnup Equivalence Curve	3.3-64
Figure 3.3-4	KENO Geometry of 1/8 NUHOMS®-24P DSC Array Model Used to Analyze Axial BU Variation Effects on Calculated Reactivity	3.3-65
Figure 3.3-5	Relative Axial Burnup vs. Fuel Height Used in Axial BU Sensitivity Study NUHOMS®-24P DSC	3.3-66
Figure 3.3-6	NUHOMS®-52B KENO Model General Arrangement (Internals)	3.3-67
Figure 3.3-7	NUHOMS®-52B KENO Model Cask Arrangement	3.3-68
Figure 3.3-8	NUHOMS®-52B Typical Fuel Assembly Cell	3.3-69
Figure 3.3-9	NUHOMS®-52B Typical Fuel Assembly Array (7x7)	3.3-70
Figure 3.3-10	NUHOMS®-52B Location of Fuel Assemblies	3.3-71
Figure 3.3-11	Histogram of keff Results for PNL Criticals	3.3-72
Figure 3.3-12	NUHOMS®-52B Fuel Assembly Position Sensitivity	3.3-73

LIST OF FIGURES

(Continued)

		Page
Figure 3.3-13	NUHOMS®-52B Neutron Absorber Boron Sensitivity Curve	3.3-74
Figure 3.3-14	NUHOMS®-52B Absorber Sheet Thickness Sensitivity	3.3-75
Figure 3.3-15	NUHOMS®-52B Neutron Absorber Width Sensitivity	3.3-76
Figure 3.3-16	NUHOMS®-52B Moderator Density Sensitivity	3.3-77
Figure 3.3-17	Maximum PWR Cladding Temperature Limit vs. Cooling Time	3.3-78
Figure 3.3-18	Maximum BWR Cladding Temperature Limit vs. Cooling Time	3.3-79
Figure 4.2-1	Standardized NUHOMS® Canister Shell Assembly	4.2-12
Figure 4.2-2	Standardized NUHOMS®-24P Canister Basket	4.2-13
Figure 4.2-3	Standardized NUHOMS®-52B Canister Basket	4.2-14
Figure 4.2-4	DSC Top Shield Plug and Cover Plate Closure Welds	4.2-15
Figure 4.2-5	DSC Siphon and Vent Port Closure Welds	4.2-16
Figure 4.2-6	Prefabricated NUHOMS® HSM (Model 102) Longitudinal Section	4.2-17
Figure 4.2-7	Prefabricated NUHOMS® HSM (Model 102) Cross-Section	4.2-18
Figure 4.2-8	DSC Support Structure	4.2-19
Figure 4.2-9	DSC Axial Retainer	4.2-20
Figure 4.2-10	Composite View of NUHOMS® Transfer Cask and NUHOMS®-24P DSC with Spent PWR Fuel	4.2-21
Figure 4.2-11	Composite View of NUHOMS® Transfer Cask and NUHOMS®-52B DSC with Spent BWR Fuel	4.2-22
Figure 4.2-12	NUHOMS® On-Site Transfer Cask with BWR Extension Collar	4.2-23
Figure 4.2-13	Elevation View of Transfer Cask Restraint	4.2-24
Figure 4.2-14	Transfer Cask Temporary Shield Plug	4.2-25
Figure 4.2-15	NUHOMS® Transfer Cask Lifting Yoke	4.2-26
Figure 4.2-16	DSC/Transfer Cask Annulus Seal Detail	4.2-27
Figure 4.7-1	Typical DSC Draining and Drying System	4.7-12
Figure 4.7-2	DSC Automatic Welding System	4.7-13
Figure 4.7-3	Typical NUHOMS® Transport Trailer	4.7-14
Figure 4.7-4	NUHOMS® Transport Cask Downending Sequence	4.7-15
Figure 4.7-5	NUHOMS® Skid Positioning System (SPS)	4.7-16
Figure 4.7-6	NUHOMS® Cask Support Skid Tie-Down Bracket	4.7-17
Figure 5.1-1	NUHOMS® System Loading Operations Flow Chart	5.1-21
Figure 5.1-2	NUHOMS® System Retrieval Operations Flow Chart	5.1-24
Figure 5.2-1	Primary Operations for the NUHOMS® System	5.2-4
Figure 5.2-2	NUHOMS® Cask/HSM Alignment Verification	5.2-7
Figure 7.3-1	Deleted	7.3-15
Figure 7.3-2	Deleted	7.3-15
Figure 7.3-3	Locations of Reported Dose Rates for Tables 7.3-2 and 7.3-3	7.3-16
Figure 7.3-4	Included in Appendix A	7.3-17
Figure 7.3-5	Deleted	7.3-17
Figure 7.3-6	Deleted	7.3-17
Figure 7.3-7	Deleted	7.3-17
Figure 7.3-8	Included in Appendix A	7.3-17

LIST OF FIGURES

(Continued)

		Page
Figure 7.3-9	Deleted	7.3-17
Figure 7.3-10	Deleted	7.3-17
Figure 7.3-11	Included in Appendix A	7.3-17
Figure 7.4-1	Deleted	7.4-5
Figure 7.4-2	On-Site Dose Map Around 2x10 Array of Standard HSMs Containing 10 Year Cooled Fuel (mrem/hr)	7.4-6
Figure 7.4-3	On-Site Dose Map Around 2-1x10 Arrays of Standard HSMs Containing 10 Year Cooled Fuel (mrem/hr)	7.4-7
Figure 7.4-4	Deleted	7.4-8
Figure 7.4-5	HSM Roof Average Dose Rate - 10 Year Fuel	7.4-9
Figure 7.4-6	HSM Front Wall Average Dose Rate - 10 Year Fuel	7.4-10
Figure 7.4-7	Deleted	7.4-11
Figure 7.4-8	Deleted	7.4-12
Figure 8.1-1	NUHOMS®-24P DSC Internal Temperature Distribution for 70°F Ambient	8.1-94
Figure 8.1-2	NUHOMS®-24P DSC Internal Temperature Distribution for 100°F Ambient	8.1-95
Figure 8.1-3	NUHOMS®-52B DSC Internal Temperature Distribution for 70°F Ambient	8.1-96
Figure 8.1-4	NUHOMS®-52B DSC Internal Temperature Distribution for 100°F Ambient	8.1-97
Figure 8.1-5	NUHOMS®-24P DSC Spacer Disc Temperature Distribution for 100°F Ambient	8.1-98
Figure 8.1-6	NUHOMS®-52B DSC Spacer Disk Temperature Distribution for 100°F Ambient	8.1-99
Figure 8.1-7	NUHOMS®-24P HSM Temperature Distribution for 70°F Ambient	8.1-100
Figure 8.1-8	NUHOMS®-24P HSM Temperature Distribution for 100°F Ambient	8.1-101
Figure 8.1-9	NUHOMS®-52B HSM Temperature Distribution for 70°F Ambient	8.1-102
Figure 8.1-10	NUHOMS®-52B HSM Temperature Distribution for 100°F Ambient	8.1-103
Figure 8.1-11	Standardized Transfer Cask Temperature Distribution for 100°F Ambient	8.1-104
Figure 8.1-12	Standardized Transfer Cask Temperature Distribution for 0°F Ambient	8.1-105
Figure 8.1-13	DSC Shell Stress Analysis Diagram	8.1-106
Figure 8.1-14a	DSC Shell Assembly Top End 90° Analytical Model	8.1-107
Figure 8.1-14b	DSC Shell Assembly Bottom End 90° Analytical Model	8.1-108
Figure 8.1-15	Partial View of DSC Shell Assembly Bottom End 180° Analytical Model Showing End Plates and Grapple Assembly	8.1-109
Figure 8.1-16	NUHOMS®-24P DSC Spacer Disk Thermal Model	8.1-110
Figure 8.1-17	NUHOMS®-52B DSC Spacer Disk Thermal Model	8.1-111
Figure 8.1-18	NUHOMS®-24P DSC Basket Assembly Handling Model	8.1-112
Figure 8.1-19	Typical HSM Reinforcement (Reinforcing bar size and spacing)	8.1-113

LIST OF FIGURES

(Continued)

		Page
Figure 8.1-20	DSC Support Structure Analytical Model	8.1-114
Figure 8.1-21	Prefabricated HSM Analytical Model	8.1-115
Figure 8.1-22	Analytical Model for HSM, DSC, and DSC Support Structure	8.1-116
Figure 8.1-23	Analytical Model for HSM Base Unit Thermal Conditions	8.1-117
Figure 8.1-24	Analytical Model for HSM Roof Thermal Conditions	8.1-118
Figure 8.1-25	Variation in Strength of Basalt Aggregate Concrete with Temperature and Length of Exposure	8.1-119
Figure 8.1-26	Compressive Strength of Concrete at High Temperature	8.1-120
Figure 8.1-27	Modulus of Elasticity of Concrete at High Temperatures	8.1-121
Figure 8.1-28	Modulus of Elasticity for Portland Cement/Basalt Aggregate Concrete Subjected to Short and Long-Term Heating	8.1-122
Figure 8.1-29	Deleted	8.1-123
Figure 8.1-30	Transfer Cask Handling Loads	8.1-124
Figure 8.1-31	DSC Axial Jam Condition	8.1-125
Figure 8.1-32	DSC Binding (Pinching) Condition	8.1-126
Figure 8.1-33	Deleted	8.1-127
Figure 8.1-34	NUHOMS®-24P HSM Air Temperatures for 70°F Ambient Temperature	8.1-128
Figure 8.1-35	NUHOMS®-52B HSM Air Temperatures for 70°F Ambient Temperature	8.1-129
Figure 8.1-36	Two-Dimensional HSM Model Geometry	8.1-130
Figure 8.1-36a	ANSYS Model of AHSM	8.1-131
Figure 8.1-37	Deleted	8.1-132
Figure 8.1-38	HEATING7 Model of NUHOMS®-24P DSC	8.1-133
Figure 8.1-39	HEATING7 Model of NUHOMS®-52B DSC	8.1-134
Figure 8.1-40	NUHOMS®-24P DSC HEATING7 Results for 70°F Ambient	8.1-135
Figure 8.1-41	NUHOMS®-52B DSC HEATING7 Results for 70°F Ambient	8.1-137
Figure 8.1-42	Transfer Cask Thermal Model for Top and Bottom of the Cask	8.1-139
Figure 8.1-43	Deleted	8.1-140
Figure 8.1-44	Deleted	8.1-141
Figure 8.1-45	Maximum Fuel Clad Temperature vs. DSC Surface Temperature for NUHOMS®-24P	8.1-142
Figure 8.1-46	Maximum Fuel Clad Temperature vs. DSC Surface Temperature for NUHOMS®-52B	8.1-143
Figure 8.1-47	Deleted	8.1-144
Figure 8.1-48	Deleted	8.1-144
Figure 8.1-49	Deleted	8.1-144
Figure 8.1-50	Deleted	8.1-144
Figure 8.2-1	DSC Lift-Off Evaluation	8.2-83
Figure 8.2-2	Design Seismic Response Spectra	8.2-84
Figure 8.2-3	Transfer Cask Postulated Drop Accident Scenarios	8.2-85

LIST OF FIGURES

(Continued)

		Page
Figure 8.2-4	NUHOMS®-24P DSC Spacer Disk Horizontal Side Drop Analytical Model	8.2-86
Figure 8.2-5	NUHOMS®-24P DSC Spacer Disk Loading for Horizontal Drop Accident	8.2-87
Figure 8.2-6	Deleted	8.2-88
Figure 8.2-7a	NUHOMS®-52B DSC 180° Spacer Disk Side Drop Analytical Model	8.2-89
Figure 8.2-7b	NUHOMS®-52B DSC 360° Spacer Disk Side Drop Analytical Model	8.2-90
Figure 8.2-8	Deleted	8.2-91
Figure 8.2-9	Transfer Cask and DSC Top Drop Model	8.2-92
Figure 8.2-10	Transfer Cask and DSC Bottom Drop Model	8.2-93
Figure 8.2-10a	OS197 and OS197H Transfer Cask Side Drop Model	8.2-94
Figure 8.2-11	Tornado Missile Impact Model	8.2-95
Figure 8.2-12	NUHOMS®-52B DSC Neutron Absorber Plate Analytical Model for Top End Drop	8.2-96
Figure 8.2-13	NUHOMS®-52B DSC Neutron Absorber Plate Horizontal Side Drop Load Conditions	8.2-97
Figure 8.2-14	NUHOMS®-24P Support Rod Vertical End Drop Analytical Model	8.2-98
Figure 8.2-15a	NUHOMS®-52B DSC Basket Assembly 90° Model Vertical End Drop Analytical Model	8.2-99
Figure 8.2-15	NUHOMS®-52B DSC Basket Assembly 180° Model Vertical End Drop Analytical Model	8.2-100
Figure 8.2-16	HSM Roof Internal Concrete Temperatures Following Vent Blockage	8.2-101
Figure 8.2-17	Temperature Performance of the NUHOMS® System During the Electrically Heated Tests	8.2-102
Figure 8.2-18	Effect of Blocking the Inlet and Outlet Air Vents	8.2-103
Figure 11.1-1	NUHOMS® Project Organization Chart	11.1-3

LIST OF ABBREVIATIONS

ACI	American Concrete Institute
AISC	American Institute of Steel Construction
ALARA	As Low as is Reasonably Achievable
ANF	Advanced Nuclear Fuels
ANS	American Nuclear Society
ANSI	American National Standards Institute
ASME	American Society of Mechanical Engineers
ASTM	American Society for Testing and Materials
B&W	Babcock & Wilcox
BWR	Boiling Water Reactor
10CFR	Code of Federal Regulations, Title 10
CE	Combustion Engineering
DBT	Design Basis Tornado
DSC	Dry Shielded Canister
GE	General Electric
HSM	Horizontal Storage Module
ISFSI	Independent Spent Fuel Storage Installation
NDE	Non-Destructive Examination
NDRC	National Defense Research Committee
NFPA	National Fire Protection Association
NRC	Nuclear Regulatory Commission
NUHOMS	Nuclear Horizontal Modular Storage
NUREG	Nuclear Regulatory Guide
OBE	Operating Basis Earthquake
OSHA	Occupational Health and Safety Administration
PI	Project Instruction
PWR	Pressurized Water Reactor
QP	Quality Procedure
R.G.	NRC Regulatory Guide
FSAR	Final Safety Analysis Report
SFA	Spent Fuel Assembly
SSE	Safe Shutdown Earthquake
TC	Transfer Cask
TR	Topical Report
U.S.	United States
W	Westinghouse

atm	atmosphere
bar	bar
cm	centimeter
°C	degrees Centigrade
°F	degrees Fahrenheit
fps	feet per second
ft/s	feet per second
ft	foot
ft-lb	foot pounds
He	helium
in	inch
kg	kilogram
kW	kilowatt
k-in	kip inch
ksi	kips per square inch
MWD/MTU	megawatt days per metric ton uranium
MWe	megawatts electric
MWt	megawatts thermal
Hg	Mercury
m	meter
Ci/cm^2	Curies per square centimeter
MeV	Megaelectron volt
mph	miles per hour
mm	millimeter
mrem/hr	millirem per hour
mR/hr	milliroentgen per hour
n	neutron
k_{eff}	neutron multiplication factor, effective
kN	kilonewton
N	Newton
lb	pound
lbf	pounds-force
psf	pounds per square foot
psi	pounds per square inch
psia	pounds per square inch, absolute
psig	pounds per square inch, gauge
sec	second
sq. mi.	square mile
kips	thousand pounds
ton	ton
w/o	without
wt. %0	weight %

The Final Safety Analysis Report for the Standardized NUHOMS® Horizontal Modular Storage System for Irradiated Nuclear Fuel

1. INTRODUCTION AND GENERAL DESCRIPTION OF INSTALLATION

This Final Safety Analysis Report (the terms, FSAR or SAR, are used interchangeably in this document) describes the design and forms the generic licensing basis for 10CFR72 Subpart L (1.1) certification of the standardized NUHOMS® horizontal cask system for dry storage of PWR or BWR spent nuclear fuel assemblies. The NUHOMS® system provides for the horizontal storage of spent fuel in a dry shielded canister (DSC) which is placed in a concrete horizontal storage module (HSM). The NUHOMS® system is designed to be installed at any reactor site or any new site where an independent spent fuel storage installation (ISFSI) is required.

The original NUHOMS® Topical Report (NUH-001, Revision 1A, NRC Project No. M-39) was approved by the United States Nuclear Regulatory Commission (NRC) on March 28, 1986 for storage of seven spent PWR fuel assemblies per DSC and HSM (NUHOMS®-07P) (1.12, 1.13). The NUHOMS®-07P system is designed to be compatible with the IF-300 shipping cask. The DSC internal basket incorporates borated guide sleeves to ensure criticality safety during wet loading operations without credit for burnup or soluble boron.

The NUHOMS® Topical Report was revised (NUH-002, Revision 0, NRC Docket No. M-49) to provide the generic design criteria and safety analysis for the larger 24 spent PWR fuel assembly design (NUHOMS®-24P) and its associated on-site transfer cask. NRC approval of the NUHOMS®-24P Topical Report was granted on April 26 1989 (1.10, 1.11). Unlike the NUHOMS®-07P design, no borated neutron absorbing material is used in the internal basket design of the NUHOMS®-24P DSC for criticality safety. Credit for soluble boron is used as the approval basis. Credit for burnup is also evaluated as an alternative design acceptance basis for the NUHOMS®-24P DSC design pending future generic acceptance by the NRC. The approved NUHOMS®-24P Topical Report forms the principal basis for the standardized NUHOMS® system presented in this FSAR. The NRC has issued Certificate of Compliance (CoC) 1004, dated January 23, 1995, for the standardized NUHOMS® system.

This FSAR also includes the NUHOMS®-52B DSC, which is designed to store 52 BWR fuel assemblies with the fuel assembly flow channels intact. The NUHOMS®-52B utilizes the same HSM as does the standardized NUHOMS®-24P DSC. New criticality, thermal and structural analyses for the 52B basket are included as are the specifications of spent fuel assemblies to be stored. The 52B basket includes fixed neutron absorbing plates for criticality safety, similar to that of the NUHOMS®-07P DSC. Unborated plates may be used pending a burnup credit analysis to be submitted when burnup credit is generically accepted by the NRC.

The NRC approved Amendment No. 1 to CoC 1004 on April 2000. This amendment reflects the transfer of the CoC from VECTRA Technologies, Inc. to Transnuclear West Inc.

Amendment No. 2 to CoC 1004, approved on September 5, 2000, adds fuel qualification tables and updates Fuel Specification 1.2.1 to reflect additional fuel parameters for both the PWR and BWR fuels. The fuel qualification tables provide a simplified approach for users of the

NUHOMS® storage system in selection of acceptable assemblies during loading. In addition, Amendment No. 2 authorizes the storage of Burnable Poison Rod Assemblies (BPRAs) in the NUHOMS®-24P long cavity DSC. A detailed description of the authorized contents and supporting analyses for the storage of PWR fuel with BPRAs is provided in Appendix J.

Amendment No. 3 to CoC 1004, approved on September 12, 2001, authorizes the addition of the NUHOMS®-61BT DSC to the standardized NUHOMS® system. The NUHOMS®-61BT DSC is designed to store 61 intact BWR fuel assemblies and meets the storage and transportation requirements of 10CFR72 and 10CFR71, respectively. A detailed description of the authorized contents and supporting safety analyses for this system are provided in Appendix K.

TN West has added NUHOMS®-24PT2 DSC to the standardized NUHOMS® system. The NUHOMS®-24PT2 DSC is a modified version of the NUHOMS®-24P DSC, designed to store 24 intact PWR fuel assemblies with or without BPRAs. This DSC meets the storage and transportation requirements of 10CFR72 (CoC 1004) and 10CFR71 (CoC 9255), respectively. A detailed description of the authorized contents and supporting safety analyses for this system are provided in Appendix L.

Revision 6 adds enhanced versions of the standardized HSM and transfer cask, designated as HSM Model 102 and OS197H, respectively, to the standardized NUHOMS® system.

Appendix B has been revised to include a validation of the fuel effective conductivity values used in the standardized NUHOMS® thermal analysis against the NUHOMS®-7P test data.

The remainder of this chapter provides a general overview of the standardized NUHOMS® system and summarizes the contents of this FSAR.

1.1 Introduction

Due to the unavailability of nuclear fuel reprocessing or a permanent geologic repository in the United States (U.S.), long-term storage of spent fuel assemblies (SFAs) has become necessary. To date, storage systems have, to a large extent, relied on the plant's spent fuel pools. However, as existing pools have begun to approach their capacity (with high-density storage racks), out-of-pool dry storage system designs have emerged. NUHOMS® is a proven system for dry storage which has been in use at reactor sites since March of 1989.

Figure 1.1-1, Figure 1.1-2 and Figure 1.1-3 show the primary components and arrangement of an ISFSI utilizing the NUHOMS® system. The SFAs are loaded into the DSC (which is placed inside the transfer cask) in the fuel pool at the reactor site. The transfer cask containing the loaded DSC is removed from the pool and placed in the cask decon area where sealing, draining, and drying operations are performed. The DSC cavity is then backfilled with helium. Multi-layer, double seal welds at each end of the DSC and multi-layer circumferential and longitudinal welds are utilized to assure that no leakage of helium can occur. The cask is then placed on a transport trailer in the plant's fuel/reactor building and towed to the ISFSI located on-site. At the ISFSI location, the loaded transfer cask is aligned with the HSM and the DSC is pushed out of the transfer cask into the HSM using a hydraulic ram. Once inside the HSM, the DSC is in safe, passive dry storage.

The various components of the NUHOMS® system are further described in Sections 1.2 and 1.3. The design and the conservative generic analyses of the system components are described in detail in the remainder of this FSAR. The principal design features of a NUHOMS® ISFSI are:

1. Canisterized Spent Fuel in a Welded Containment Vessel Shielded by a Prefabricated Concrete Module

   This provides for a high integrity multiple barrier system to ensure the safe storage of spent fuel which can be easily implemented by a licensee on a timely economical basis.

2. Horizontal Transfer of the DSC into and out of the HSM

   This obviates the need for a critical heavy lift of the SFAs at the storage location (i.e. away form the plant's safety-related systems), optimizes the amount of material required for biological shielding, and results in a passive, low profile, impact-resistant storage structure. This also provides a means for canister retrieval and eventual off-site shipment in a compatible licensed shipping cask without future reliance on plant facilities.

3. Transport of the DSC from the fuel/reactor building to the HSM in a Shielded Atmospheric On-site TC

   This provides radiation shielding and structural protection for the DSC during the transfer operation while providing passive heat removal for the canisterized spent fuel.

4. Shielded End Plug Assemblies on the DSC

   This enables contact handling and monitoring of the DSCs at the top and bottom end locations when the DSC is inside the transfer cask or the HSM.

5. Phased Construction of HSMs

   This facilitates ISFSI licensing and phased construction of the HSM arrays, thus economizing and distributing the cost for fuel storage over the time span when storage is actually required.

6. Passive Natural Circulation Air Cooling

   This keeps the maximum fuel rod cladding temperature below acceptable limits to preclude damage during long term storage.

7. Acceptance of Equivalent Spent Fuel

   The NUHOMS® system accepts PWR or BWR spent fuel assemblies with equivalent decay heat and radiological source term values enveloped by those corresponding to fuel with the cooling time, initial uranium content, initial enrichment, and fuel burnup as outlined in Chapter 3.

8. Helium Storage Atmosphere

   This provides effective heat transfer and prevents oxidation of the fuel cladding and fuel pellets. The double seal welded DSC containment boundary assures that the helium atmosphere is maintained.

This FSAR is written for the U.S. NRC for review under Title 10 of the Code of Federal Regulations, Part 72 (10CFR72). In addition, this document provided the technical basis for issuance of a generic CoC 1004 to Transnuclear West (TN West) for the standardized NUHOMS® canister/module storage cask system to allow use by a 10CFR72 general license holder in accordance with 10CFR72 Subpart L (1.1).

To facilitate direct referencing, the format, the numbering system, the section headings, and the content have followed NRC Regulatory Guide 3.48 (1.2). Numbers in parentheses indicate references which are listed at the end of each chapter. SI units are used in the first three chapters of this FSAR. Where the general design features of the system are discussed, commonly used units are included in parentheses. For Chapters 4 through 11, the units commonly used in the U.S. for the various design and analysis work are used. SI units are provided in parentheses where meaningful.

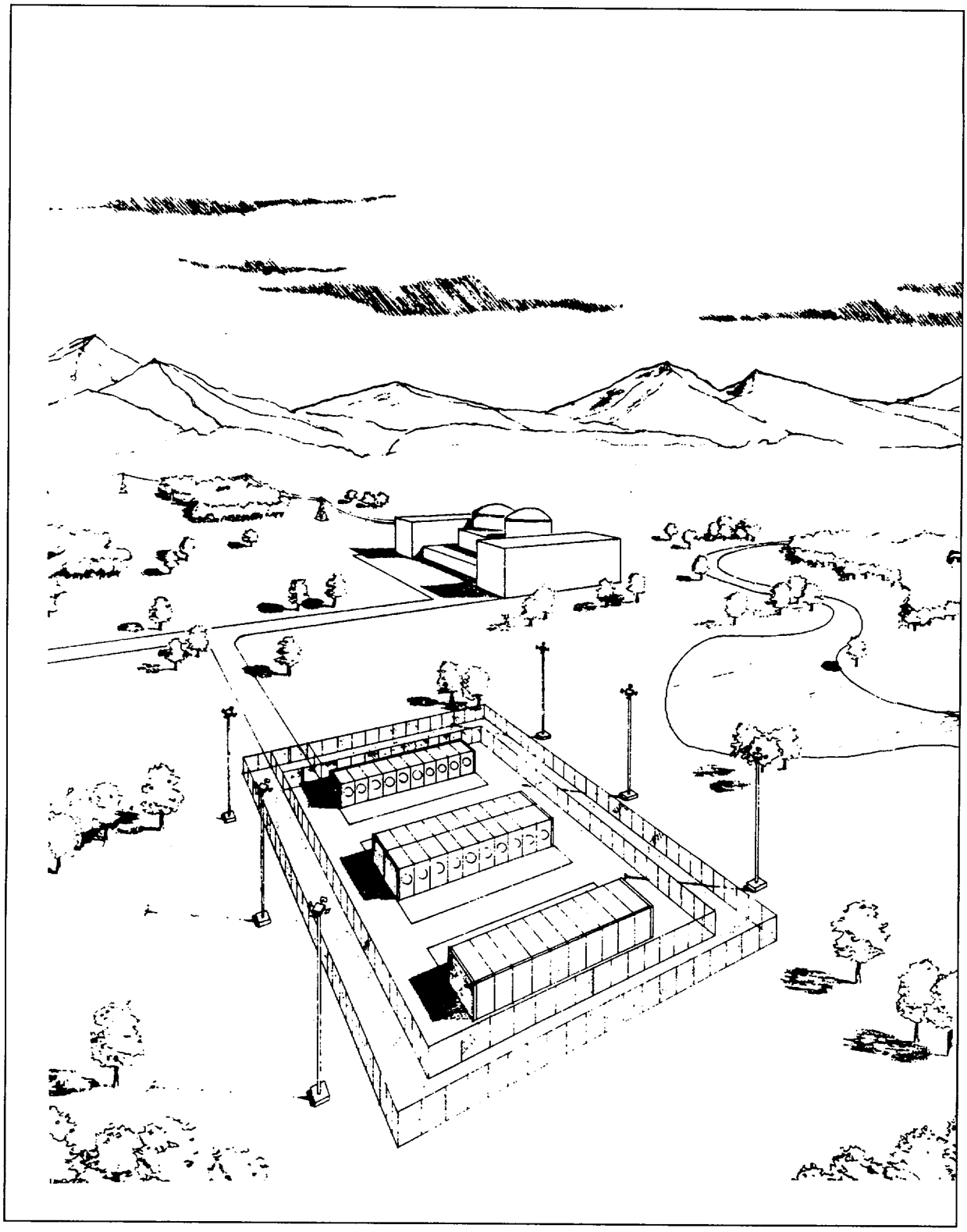

Figure 1.1-1
Illustration of Typical Life-of-Plant NUHOMS® ISFSI
(for information only)

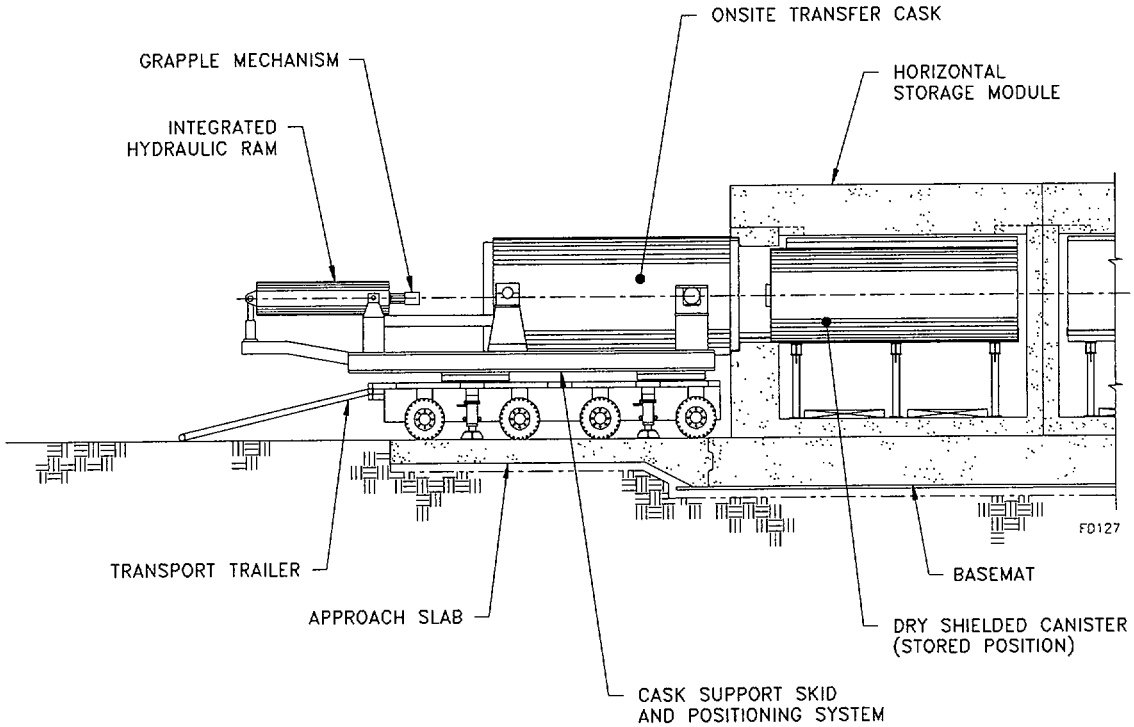

Figure 1.1-2
NUHOMS® System Components, Structures, and Transfer Equipment - Elevation View

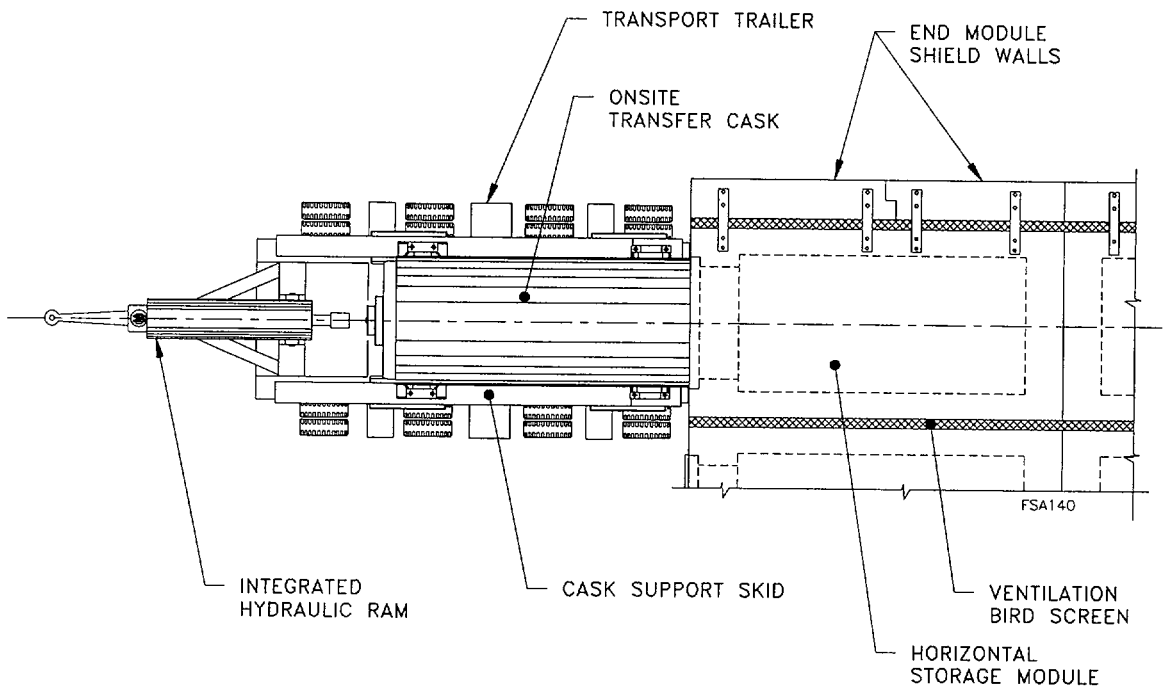

Figure 1.1-3
NUHOMS® System Components, Structures, and Transfer Equipment
Plan View

1.2 General Description of Installation

1.2.1 Arrangement of Major Structures and Equipment

The NUHOMS® system provides for the horizontal, dry storage of canisterized SFAs in a concrete HSM. The cask storage system components for NUHOMS® consist of a reinforced concrete HSM and a DSC containment vessel with an internal basket assembly which holds the SFAs. The general arrangement of a typical NUHOMS® ISFSI and the system components are shown in Figure 1.1-1, Figure 1.1-2 and Figure 1.1-3.

In addition to these cask storage system components, the NUHOMS® system also utilizes transfer equipment to move the DSCs from the plant's fuel/reactor building, where they are loaded with SFAs and readied for storage, to the HSMs where they are stored. This transfer system consists of a transfer cask, a lifting yoke, a hydraulic ram system, a prime mover for towing, a transport trailer, a cask support skid, and a skid positioning system. This transfer system interfaces with the existing plant fuel pool, the cask handling crane, the site infrastructure (i.e. roadways and topography) and other site specific conditions and procedural requirements. Auxiliary equipment such as a cask/canister annulus seal, a vacuum drying system and an automatic welding system are also used to facilitate canister loading, draining, drying, inerting, and sealing operations. This SAR primarily addresses the design and analysis of the cask storage system components, including the DSC and the HSM, which are important to safety in accordance with 10CFR72. Sufficient information for the transfer system and auxiliary equipment is also included solely to demonstrate that means for safe operation of the system are provided.

Each NUHOMS® system model type is designated by NUHOMS®-XXY. The two digits (XX) refer to the number of fuel assemblies stored in the DSC, and the character (Y) is a P for PWR, or B for BWR, to designate the type of fuel stored. A fourth character (T) is added, if applicable, to designate that the DSC is intended for transportation in a 10CFR71 approved package. The number of HSMs to be erected at any one time depends on individual plant discharge rates and storage capacity needs, and will be addressed by the licensee. Examples of typical ISFSI initial capacity and future expansion provisions for PWR and BWR plants are shown in Table 1.2-1. Dimensions of the NUHOMS® system components as described in the text, figures and tables of this SAR are nominal dimensions and for general system description purposes. Actual design dimensions of the NUHOMS® system components are contained in Appendix E drawings of this SAR.

This SAR describes only the standardized NUHOMS® system, including the design of the DSC and the HSM, which can be utilized to accommodate internal baskets which hold 24 PWR or 52 channeled BWR or 61 channeled or unchanneled BWR fuel assemblies. The system can accommodate a wide range of plant specific conditions and spent fuel characteristics. Future baskets may be designed to hold a greater number of fuel assemblies in a canister shell assembly with the same envelope dimensions. Figure 1.2-1 shows the internal basket arrangements for various DSCs.

The outside diameter for all NUHOMS® canisters excluding the NUHOMS®-07P canisters is standardized to facilitate compatibility. This permits the design of the module and transfer system to be standardized and simplifies the interfaces for eventual off-site shipment of intact canisters by the DOE. The overall length of the canisters may be increased or reduced to accommodate specific fuel assembly types or individual utility needs. "Standard" length PWR and BWR canisters are discussed in detail in the body of this SAR. The long-cavity PWR canister is evaluated in Appendices H and J of this SAR. Other cavity lengths may be included at a later time. NUHOMS®-61BT and -24PT2 systems are evaluated in Appendices K and L, respectively.

This SAR deals specifically with the NUHOMS® DSC and HSM which have been standardized for all plants. ISFSI capacities will vary; however, it is unlikely that a licensee would store less than the number of fuel assemblies corresponding to one year's reactor core discharge. This SAR addresses both a single HSM and HSMs which are grouped together to form arrays of any size. The standardized prefabricated HSM used to form HSM arrays is shown in Figure 1.2-2 (Model 102) and Figure 1.2-2a (Model 80). The specific size of each HSM array will vary depending on the licensee's fuel storage requirements. This SAR provides the design description and analyses for HSM arrays ranging in size from a single standalone HSM up to a 2x10 array of 20 back-to-back side-by-side HSMs. HSM arrays larger than 2x10 are also acceptable since each module is a free-standing unit which is uncoupled structurally and thermally from the adjacent modules and the ISFSI basemat.

1.2.2 Principal Design Criteria

The principal design criteria and parameters upon which this SAR is based are summarized in Table 1.2-2.

Structural Features: The HSM is a low profile, reinforced concrete structure designed to withstand all normal condition loads as well as the abnormal condition loads created by earthquakes, tornadoes, flooding, and other natural phenomena. The HSM is also designed to withstand abnormal condition loadings postulated to occur during design basis accident conditions such as a complete loss of ventilation.

The structural features of the DSC design depend, to a large extent, on the postulated design basis transfer cask drop accident (described in Section 8.2.5). The DSC shell, the redundant closures on each end, and the DSC internals are designed to ensure that the intended safety functions of the system are not impaired following a postulated transfer cask drop accident. The limits established for equivalent decelerations due to a postulated drop accident are intended to be bounding. They envelop a range of conditions such as the transfer cask handling operations, the type of handling equipment used, the transfer cask on-site transport route, the maximum feasible drop height and orientation, and the conditions of the impacted surface. The structural safety features of the NUHOMS® system are described in Chapters 4 and 8.

Decay Heat Removal: The decay heat of the SFAs during storage in the HSM is removed from the DSC by natural circulation convection and by conduction through the HSM walls and roof. Air

enters near the bottom of the HSM, circulates and rises around the DSC and exits through shielded openings near the top of the HSM. The cross-sectional areas of the air inlet and outlet openings, and the interior flow paths are designed to optimize ventilation air flow in the HSM for decay heat removal including worst case extreme summer ambient conditions. The thermal performance features of the NUHOMS® system are described in Chapters 4 and 8.

External Atmosphere Criteria: Given the corrosion resistant properties of materials and the coatings used for construction of the NUHOMS® system components, and the warm, dry environment which exists within the HSM, no limits on the range of acceptable external atmospheric conditions are required. All components are either stainless steel, are coated with inorganic coatings, or are galvanized. Hence, all metallic materials are protected against corrosion. The interior of the HSM is a concrete surface and is void of any substance which would be conducive to the growth of any organic or vegetative matter. The design of the HSM also provides for drainage of ambient moisture which further eliminates any need for external atmospheric limitation.

The ambient temperatures selected for the design of the NUHOMS® system range from -40°F to 125°F, with a lifetime average ambient temperature of 70°F. The extreme ambient temperatures of -40°F and 125°F are expected to last for a short period of time, i.e., on the order of hours. The minimum and maximum average ambient temperatures of 0°F and 100°F are expected to last for longer periods of time, i.e., on the order of days.

1.2.3 Operating and Fuel Handling Systems

Some handling equipment and support systems within the plant needed to implement the NUHOMS® system are covered by the licensee's 10CFR50 operating license. The on-site transfer cask is designed to satisfy a range of plant specific conditions and requirements. The general operations for a typical NUHOMS® system installation are summarized in Table 1.2-3. A more detailed procedure for this sequence of operations is provided in Section 5.1 and Appendix K. The majority of the fuel handling operations involving the DSC and transfer cask (i.e. fuel loading, draining and drying, transport trailer loading etc.) utilize procedures similar to those already in place at reactor sites for SFA shipment. The remaining operations (canister sealing, cask-HSM alignment and DSC transfer) are unique to the NUHOMS® system.

1.2.4 Safety Features

The principal safety features of a NUHOMS® ISFSI include the high integrity containment for the confinement of spent fuel materials, the axial shielding provided by the DSC, and the extensive biological shielding and protection against extreme natural phenomena provided by the massive reinforced concrete HSM. The shielding materials incorporated into the DSC and HSM designs reduce the gamma and neutron flux emanating from the SFAs so that the dose rate at the ISFSI fence is within 10CFR72 limits and is ALARA. The radiological safety features of the NUHOMS® system are described in Chapters 3 and 7.

The DSC and HSM are designed and constructed in accordance with industry accepted codes and practices for important to safety systems under an approved Quality Assurance program as

described in Chapters 3 and 11. The resulting storage components have substantial margins of safety against all postulated events and readily satisfy the acceptance criteria of 10CFR72 as demonstrated by this SAR.

1.2.5 Radioactive Water and Auxiliary Systems

Because of the passive nature of the NUHOMS® system, there are no radioactive waste or auxiliary systems required during normal storage conditions. There are, however, some waste and auxiliary systems required during the loading, draining, drying, backfilling, sealing and transfer operations for the DSC. The plant's radwaste systems are utilized to process water and off-gas which are purged from the DSC during draining, drying and transfer cask decon operations. Auxiliary handling systems (such as the fuel building crane, and fuel handling equipment) are also utilized during the DSC transfer operation. Additional plant support systems such as compressed air, helium, demineralized water, and AC power are also utilized. The plant interface equipment, materials and systems typically used are summarized in Table 1.2-4. The waste and auxiliary systems are further described in Chapters 3, 4, 5, and 6.

1.2.6 Principal Characteristics of the Site

The NUHOMS® system described in this SAR is readily adaptable to a wide range of ISFSI site conditions. The basic considerations for selection of a suitable NUHOMS® ISFSI site are as follows:

Site Size: The size of the site should be adequate to accommodate the desired number of prefabricated HSMs with a basemat, approach slabs, and minimum clearance zones for security, as shown in Figure 1.1-1. The site selected should include consideration of present and future storage capacity requirements.

Site Arrangement: Prefabricated HSMs can be arranged in a number of ways to minimize area exposure rates and construction material requirements. They can be placed in a single row of side-by-side modules with additional rear shield walls. Or, they can be arranged in a side-by-side, back-to-back array which eliminates the need for rear shield walls. Larger installations can use combinations of these layouts. For some sites, two single rows in a face-to-face arrangement may provide lower exposure rates away from the ISFSI since no HSM front sides face outward. HSM arrays can be expanded by adding additional HSM units. This can be done with or without relocating end shield walls.

Site Location: For ALARA and operational efficiency, it is desirable to locate the ISFSI as close as practical to the plant's fuel/reactor building to minimize transport distance and time to the ISFSI at a site with the lowest occupancy factor. The ISFSI site location should take into consideration the relative location of the plant's turbine building and the trajectory of postulated turbine missiles. It is also desirable to minimize the elevation differences along the transfer route between the plant's fuel/reactor building and the ISFSI site. As a general rule, existing plant site roads can be shown to be adequate for the standard NUHOMS® transport trailer.

Site Soil Conditions: The site soil conditions required for a NUHOMS® ISFSI are comparable to those needed for metal or concrete vertical cask storage systems. As the basemat and foundation are not important to safety, commercial industry practices are utilized to ensure that adequate conditions of the site sub-grade are provided.

Site Flooding: It is desirable but not a requirement that the ISFSI site not be subject to flooding above the elevation of the module inlet vents for abnormal conditions and above the bottom of the canister for extreme conditions. However, the NUHOMS® ISFSI is designed to operate within the applicable acceptance limits under a worst case postulated flood height of 50 feet.

Table 1.2-1
Typical NUHOMS® ISFSI Storage Capacity Expansion and Canister Loading Plan
(for information only)

ISFSI Construction Phase	Number of PWR/BWR Fuel Assemblies	Frequency of DSC Loadings	Frequency of HSM Installation
Single Unit Plant			
Base Plan	240/520	10/first 2 yrs.	10/first yr.
Base Plan Expansion:			
o Phase 1	240/520	2 to 3/yr.	10/3 to 5 yrs.
o Phase 2	240/520	2 to 3/yr.	10/3 to 5 yrs.
o Phase 3	240/520	2 to 3/yr.	10/3 to 5 yrs.
Total (plant life capacity for typical single unit plant)	960/2,080	40/15 yrs.	40/12 yrs.
Multiple Unit Plant			
Base Plan	480/1,040	20/first 3 yrs.	20/first yr.
Base Plan Expansion:			
o Phase 1	240/520	3 to 5/yr.	10/2 to 3 yrs.
o Phase 2	240/520	3 to 5/yr.	10/2 to 3 yrs.
o Phase 3	240/520	3 to 5/yr.	10/2 to 3 yrs.
o Phase 4	240/520	3 to 5/yr.	10/2 to 3 yrs.
o Phase 5	240/520	3 to 5/yr.	10/2 to 3 yrs.
Total (plant life capacity for typical multiple unit plant)	1,680/3,640	70/15 yrs.	7/12 yrs.

Table 1.2-2
Key Design Parameters for the Standardized NUHOMS® System

Category	Criteria or Parameter	Value	
		PWR	BWR[4]
Fuel Assembly[1] Criteria:	Initial Uranium Content (kg/assembly)	475	198
	Initial Enrichment (U-235 equivalent)	4.0%	4.0%
	Fuel Burnup (MWD/MTU)	45,000	45,000
	Gamma Radiation Source (photons/ sec/assembly)	4.48E15 (10 year cooled)[2]	1.55E15
		7.45E15 (5 year cooled)	2.63E15
	Neutron Radiation Source (neutron/ sec./assembly)	1.55E8 (10 year cooled)[2]	8.40E7
		2.23E8 (5 year cooled)	1.01E8
	Decay Heat Power (kW/assembly)	1.00	0.37
	Minimum BPRA Cooling Time (years)	5 for B&W Designs 10 for Westinghouse Designs	N/A
Dry Shielded Canister:	Fuel Assemblies per DSC	24	52
	Size [3]:		
	Overall Length	4.72m (186.0 in.)	4.97m (196.0 in.)
	Outside Diameter	1.71m (67.2 in.)	1.71m (67.2 in.)
	Shell Thickness	16mm (0.625 in.)	16mm (0.625 in.)
	Heat Rejection (kW)	24.0	19.2
	Internal Atmosphere	Helium	Helium

(1) Enveloping design basis fuel plus BPRAs.
(2) 10 year cooled fuel data provided for information only.
(3) These are nominal dimensions. See Appendix E drawings for actual dimensions.
(4) Appendix K contains the key design parameters for the BWR fuel assemblies and the 61BT DSC.

Table 1.2-2
Key Design Parameters for the Standardized NUHOMS® System
(continued)

Category	Criteria or Parameter	Value
Dry Shielded Canister: (Concluded)	Maximum Design Pressure	Conservatively Based on 100% Release of Fill Gas and 30% Release of Fission Gas from fuel assemblies and BPRAs (if applicable) as follows: • 1% of Rods and BPRAs (normal) • 10% of Rods and BPRAs (off-normal) • 100% of Rods and BPRAs (accident)
	Equivalent Cask Drop Deceleration	75g Vertical (End) and Horizontal (Side), 25g Oblique (Corner)
	Materials of Construction	Carbon and Stainless Steel Basket Components, Carbon Steel or Steel Encased Lead Shield Plugs, and Stainless Steel Shell Assembly
	Service Life	50 Years[1]
On-Site TC:	Payload Capacity	36,300 kg (80,000 lbs.) (dry) 40,900 kg (90,000 lbs.) (wet)
	Gross Weight	90,700 kg (200,000 lbs.) (handling) 86,200 kg (190,000 lbs.) (transport)
	Surface Dose Rate	ALARA
	Equivalent Cask Drop Deceleration	75g Vertical (End) and Horizontal (Side) 25g Oblique (Corner)
	Materials of Construction	Carbon Steel, Stainless Steel, Lead, and Neutron Absorbing Material
	Service Life	50 Years

[1] Expected life is much longer (hundreds of years), however, for the purpose of this generic FSAR, the service life is taken as 50 years.

Table 1.2-2
Key Design Parameters for the Standardized NUHOMS® System
(concluded)

Category	Criteria or Parameter	Value
Horizontal Storage Module[1]:	Capacity	One DSC per HSM
	Array Size	Single Module to 2xL Module Array. L may be any value.
	HSM Size:	
	Length	PWR: 5.8m (19.0 ft.) BWR: 6.0m (19.8 ft.)
	Height	4.6m (15 ft.)
	Width	2.9m (9.7 ft.)
	Surface Dose Rate	ALARA
	Heat Rejection Capacity	24.0 kW (5 yr. cooled)
	Heat Removal	Natural Circulation
	Materials of Construction	Reinforced Concrete and Structural Steel
	Service Life	50 years

(1) These are nominal dimensions. See Appendix E drawings for actual dimensions.

Table 1.2-3
NUHOMS® System Operations Overview[(1), (2)]

1. Clean and load the DSC into the transfer cask.

2. Fill the DSC and cask with water and install the cask/DSC annulus seal.

3. Place the transfer cask containing the DSC in the fuel pool.

4. Load the spent fuel assemblies into the DSC.

5. Place the top shield plug on the DSC.

6. Remove the loaded cask from the fuel pool and place it in the decon area.

7. Lower the water level in the DSC cavity below the shield plug.

8. Place and weld the inner top cover plate to the DSC shell and perform NDE.

9. Drain the water from the cask/DSC annulus (may be delayed until after completion of step 11 or 16).

10. Drain the water from the DSC.

11. Evacuate and dry the DSC.

12. Backfill the DSC with helium.

13. Perform a helium leak test on the seal weld.

14. Seal weld the siphon and vent port plugs and perform NDE.

15. Fit-up the outer top cover plate with the DSC shell.

Table 1.2-3
NUHOMS® System Operations Overview[(1), (2)]
(concluded)

16. Weld the outer top cover plate to the DSC shell and perform NDE.

17. Install the transfer cask top cover plate.

18. Lift and downend the transfer cask onto the transport trailer.

19. Ready the HSM to receive the DSC.

20. Ready the cask for transport and tow the transport trailer to the HSM.

21. Position the transfer cask with the HSM access opening.

22. Remove the transfer cask top cover plate.

23. Align and secure the transfer cask to the HSM.

24. Set-up and ready the hydraulic ram for DSC transfer.

25. Push the DSC into the HSM.

26. Retract the ram and disengage the transfer cask from the HSM.

27. Install the DSC axial retainer and the HSM door.

---

(1) See Section 5.1 for more detailed system operation description.
(2) See Appendix K for the operations overview of the NUHOMS® -61BT system

Table 1.2-4
Typical Plant Equipment and Materials Used for NUHOMS®
DSC Loading, Closure, and Transfer Operations
(for information only)

1. Fuel Pool Lighting
2. Under Water Viewing Box
3. Fuel Handling Equipment
4. Cask Handling Crane (≥ 100 ton capacity)
5. Slings and Lifting Devices
6. Consumables and Tools
   - Demineralized Water for Decon
   - Waterproof Tape
   - Bottled Helium
   - Low Voltage Electricity
   - Torque Wrench
   - Compressed Air
   - Temperature Probe
   - Shielding Blankets
   - Welding Materials
7. Plant Radwaste Handling System
8. Radiation Monitoring Equipment
9. Helium Leak Detector
10. Heavy Haul Towing Vehicle
11. Mobile Telescoping Crane
12. Optical Survey Equipment
13. Portable Welding Equipment

CONFIGURATION	DESCRIPTION
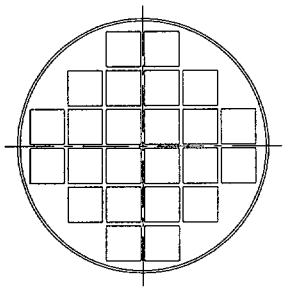	NUHOMS®-24P BASKET FOR PWR FUEL WITH NO BORATED NEUTRON ABSORBING MATERIAL AND CREDIT FOR SOLUBLE BORON
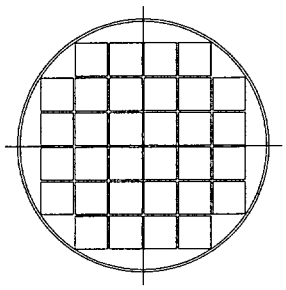	NUHOMS®-32P (FUTURE) BASKET FOR PWR FUEL WITH BORATED NEUTRON ABSORBING MATERIAL OR CREDIT FOR BURNUP
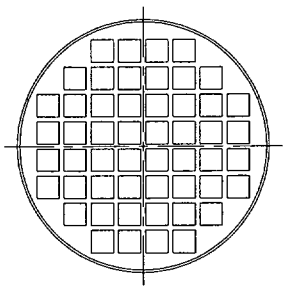	NUHOMS®-52B BASKET FOR CHANNELLED BWR FUEL WITH BORATED NEUTRON ABSORBING MATERIAL AND NO CREDIT FOR BURNUP
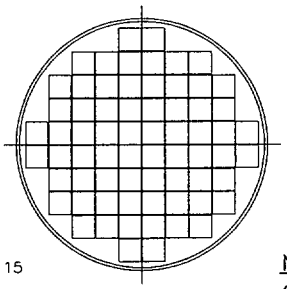	NUHOMS®-68B (FUTURE) BASKET FOR UNCHANNELLED BWR FUEL WITH BORATED NEUTRON ABSORBING MATERIAL OR CREDIT FOR BURNUP

FD115

NOTE:
Outside diameter for all canisters standardized at 67.25 inches
PWR canisters are standardized at 186.00 inches long
BWR canisters are standardized at 196.00 inches long

Figure 1.2-1
Standardized NUHOMS® Systems Canister Baskets for PWR and BWR Spent Fuel
(for information only)

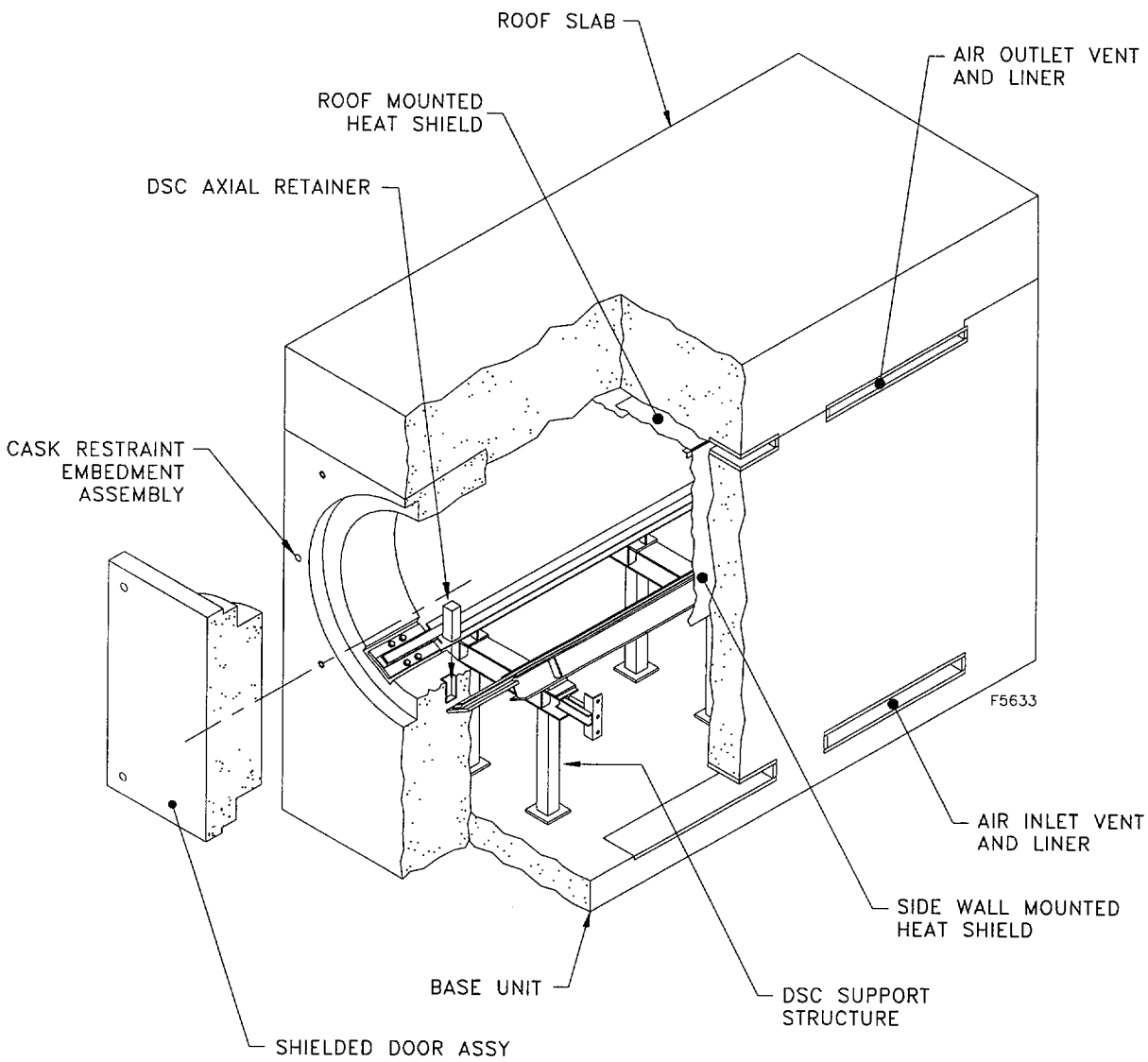

Figure 1.2-2
Prefabricated NUHOMS® Horizontal Storage Module (Model 102)

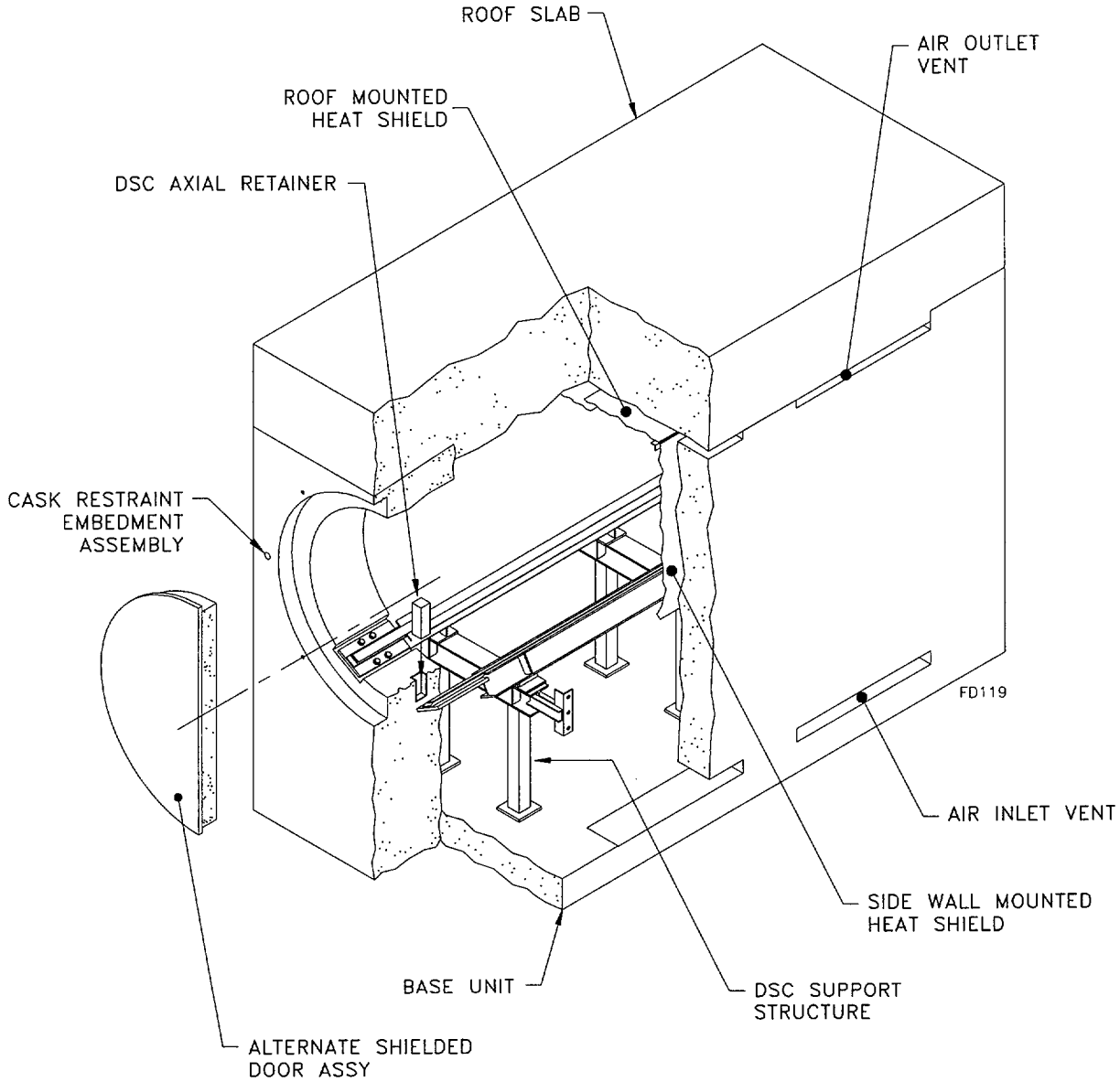

Figure 1.2-2a
Prefabricated NUHOMS® Horizontal Storage Module (Model 80)

1.3 General Systems Description

The components, structures and equipment which make up the NUHOMS® system are listed in Table 1.3-1. The following subsections briefly describe the design features and operation of these NUHOMS® system elements.

1.3.1 Storage Systems Descriptions

1.3.1.1 Dry Shielded Canister

The principal design features of the NUHOMS® DSC are listed in Table 1.3-1 and shown in Figure 1.3-1, Figure 1.3-1a, Figure 1.3-1b, Figure 1.3-2 and Figure 1.3-3. Table 1.2-2 lists the capacity, dimensions and design parameters for the NUHOMS® DSC. The cylindrical shell, and the top and bottom cover plate assemblies form the pressure retaining containment boundary for the spent fuel. The DSC is equipped with two shield plugs so that occupational doses at the ends are minimized for drying, sealing, and handling operations.

The DSC has double, redundant seal welds which join the shell and the top and bottom cover plate assemblies to form the containment boundary. The bottom end assembly containment boundary welds are made during fabrication of the DSC. The top end assembly containment boundary welds are made after fuel loading. Both top plug penetrations (siphon and vent ports) are redundantly sealed after DSC drying operations are complete. This assures that no single failure of the DSC top or bottom end assemblies will breach the DSC containment boundary. Furthermore, there are no credible accidents which could breach the containment boundary of the DSC as documented by this SAR.

The internal basket assembly contains a storage position for each fuel assembly. The criticality analysis performed for the NUHOMS®-24P and 24PT2 DSC for PWR fuel accounts for fuel burnup or takes credit for soluble boron and demonstrates that fixed borated neutron absorbing material is not required in the basket assembly for criticality control. The Boral® of the 24PT2 DSC is modeled only as unborated aluminum. Fixed neutron absorbing material is used for the NUHOMS® 61BT DSC for channeled and unchanneled BWR fuel and the NUHOMS®-52B DSC for channeled BWR fuel. Subcriticality during wet loading, drying, sealing, transfer, and storage operations is maintained through the geometric separation of the fuel assemblies by the DSC basket assembly and the neutron absorbing capability of the DSC materials of construction.

Structural support for the PWR fuel and basket guide sleeves or BWR fuel and channels in the lateral direction is provided by circular spacer disk plates in the 24P or 52B DSCs. Axial support for the NUHOMS®-24P DSC basket assembly is provided by four support rods which are welded to the spacer discs. Axial support for the NUHOMS®-24PT2 DSC basket assembly is provided by four preloaded support rods and spacer sleeves. Axial support for the NUHOMS®-52B DSC basket assembly is provided by six preloaded support rods and spacer sleeves. For the 24P and 52B DSCs, the support rods extend over the full length of the DSC cavity and bear on the canister top and bottom end assemblies.

The 61BT DSC basket structure consists of assemblies of stainless steel fuel compartments held in place by basket rails and holddown ring. The four and nine compartment assemblies are held together by welded stainless steel boxes wrapped around the fuel compartments, which also retain the neutron absorber plates between the compartments in the assemblies. The borated aluminum or boron carbide/aluminum metal matrix composite plates (neutron absorber plates) provide the necessary criticality control and provide the heat conduction paths from the fuel assemblies to the cask cavity wall.

1.3.1.2 Horizontal Storage Module

An isometric view of the two alternate designs of a prefabricated HSM utilized to form an array of HSMs is shown in Figure 1.2-2 and 1.2-2a. Each HSM provides a self-contained modular structure for storage of spent fuel canisterized in a DSC as illustrated in Figure 1.3-4. The HSM is constructed from reinforced concrete and structural steel. The thick concrete roof and walls of the HSM provide substantial neutron and gamma shielding. Contact doses for the HSM are designed to be ALARA.

The nominal thickness of the HSM roof and exterior walls of an HSM array for biological shielding is about three feet. Separate shielding walls are utilized at the end of a module row to provide the required thickness. Similarly, an additional shield wall is used at the rear of the module if the ISFSI is configured as single module rows. Sufficient shielding between HSMs in an HSM array to prevent scatter in adjacent HSMs during loading and retrieval operations is provided by thick concrete side walls. The inlet and outlet vents are designed to take advantage of the self-shielding of adjacent HSMs.

The HSM provides a means of removing spent fuel decay heat by a combination of radiation, conduction and convection. Ambient air enters the HSM through ventilation inlet openings in the lower side walls of the HSM and circulates around the DSC and the heat shield. Air exits the HSM through outlet openings in the upper side walls of the HSM. Adjacent modules are spaced to provide a ventilation flow path between modules.

Decay heat is rejected from the DSC to the HSM air space by convection and then is removed from the HSM by a natural circulation air flow. Heat is also radiated from the DSC surface to the heat shield and HSM walls where again the natural convection air flow and conduction through the walls removes the heat. Figure 1.3-5 shows the ventilation flow paths for the DSC and the HSM. The passive cooling system for the HSM is designed to assure that peak cladding temperatures during long term storage remain below acceptable limits to ensure fuel cladding integrity.

The NUHOMS® system HSMs provide an independent, passive system with substantial structural capacity to ensure the safe dry storage of spent fuel assemblies. To this end, the HSMs are designed to ensure that normal transfer operations and postulated accidents or natural phenomena do not impair the DSC or pose a hazard to plant personnel.

The HSMs are constructed on a load bearing foundation which consists of a reinforced concrete basemat on compacted engineered fill. The HSMs are located in a fenced, secured location with

controlled access. The necessary civil work required to prepare the ISFSI site is the same as that for an ISFSI utilizing vertical storage casks.

Two alternate designs of the standardized HSM are available for licensees' use: the original HSM, now designated as HSM Model 80, and HSM Model 102. HSM Model 102 design is similar to HSM Model 80 design except for the following two features:

- The steel encased composite door of HSM Model 80 design is replaced by a two foot thick reinforced concrete door with a steel liner on its inside surface. The steel liner mitigates DSC damage from spalled concrete due to tornado generated missile impact.

- The inlet and outlet vents, which are formed in concrete for HSM Model 80, are lined with 1½" steel plates.

The above features included with HSM Model 102 are improvements to the original HSM Model 80 design that increase the shielding capabilities of the HSM. The heat transfer capability (decay heat rejection from the DSC to the HSM and heat removal from the HSM by natural convection) of both HSM Model 80 and HSM Model 102 designs are equivalent. Appendix E drawings show both models. Each model can store a DSC with maximum weight up to 102 kips which includes 24P, 52B, 24PT2 and 61BT DSCs.

1.3.2 Transfer Systems Descriptions

1.3.2.1 On-Site TC

The transfer cask used in the NUHOMS® system provides shielding and protection from potential hazards during the DSC closure operations and transfer to the HSM. Two alternate configurations of the transfer cask are available for the licensees' use. The basic configuration, where the cask is provided with a solid neutron shield, is described herein as the "Standardized Cask." An alternate configuration, where a liquid neutron shield is provided instead, is described in this SAR as the "OS197 and OS197H Casks." The configuration of the OS197 is a slightly modified version of the NRC approved cask (with a liquid neutron shield) as described in the NUHOMS®–24P Topical Report (1.10). The standardized transfer cask documented in this SAR has a gross weight of less than 90.7 Te (100 tons) and is limited to on-site use under 10CFR72. The OS197 and OS197H transfer casks, which are also limited to on-site use under 10CFR72, have a maximum gross weight of 94.6 Te (104.25 tons), respectively. In addition, the licensee may also elect to utilize a future transfer cask having a gross weight of about 113.4 Te (125 tons) which can be used on-site under 10CFR72, but is also suitable for future off-site shipment of intact NUHOMS® canisters under 10CFR71. Where applicable, any other NRC licensed NUHOMS® transfer or transportation cask is acceptable for use with the standardized NUHOMS® system subject to an application specific safety evaluation.

The standardized transfer cask for the NUHOMS® system, has a 4.75m (186.75 inches) long inner cavity, a 1.73m (68 inches) inside diameter and a maximum payload capacity of 40,900 kg (90,000

pounds) wet and 36,300 kg (80,000 pounds) dry. A cask collar is used to extend the transfer cask cavity length by .25m (10 inches) for use with the longer DSCs for BWR fuel. The OS197 and OS197H transfer casks with a longer cavity length of 196.75 inches (no cask collar) may be used for DSCs with BWR fuel and when combined with a cask spacer may also be used to load DSCs with PWR fuel. The transfer cask is designed to meet the requirements of 10CFR72 for on-site transfer of the DSC from the plant's fuel pool to the HSM. As shown in Figure 1.3-6, the transfer cask is constructed from two concentric cylindrical steel shells with a bolted top cover plate and a welded bottom end assembly. The annulus formed by these two shells is filled with cast lead to provide gamma shielding. The transfer cask also includes an outer steel jacket which is filled with a hydrogen rich solid material or water for neutron shielding. The top and bottom end assemblies also incorporate a solid neutron shield material.

The transfer cask is designed to provide sufficient shielding to ensure that dose rates are ALARA. Two lifting trunnions are provided for handling the transfer cask in the plant's fuel/reactor building using a lifting yoke and an overhead crane. Lower support trunnions are provided on the cask for pivoting the transfer cask from/to the vertical and horizontal positions on the support skid/transport trailer. A cover plate is provided to seal the bottom hydraulic ram access penetration of the cask during fuel loading.

1.3.2.2 Transfer Equipment

Transport Trailer: The NUHOMS® transport trailer consists of a heavy industrial trailer with a payload capacity of 113.4 Te (125 tons). The trailer transports the cask support skid and the loaded transfer cask between the plant's fuel/reactor building and the ISFSI. The trailer is designed to ride as low to the ground as possible to minimize the HSM height and the transfer cask height during transport and DSC transfer operations. Figure 1.3-7 shows the heavy haul industrial trailer used with the standardized NUHOMS® system. The trailer is equipped with four hydraulic leveling jacks to provide vertical travel for alignment of the cask with the HSM. The trailer is towed by a conventional heavy haul truck tractor or other suitable prime mover. The nominal trailer bed height during canister transfer to the HSM is such that the transfer cask is typically not elevated more than 1.68m (5'-6") above grade as measured from the lowest point on the cask. This is well below the 2.0m (80 inch) drop height used as the accident drop design basis of the cask and canister.

Cask Support Skid: The NUHOMS® system cask support skid is similar in design and operation to other transportation cask skids used for shipment of fuel. The key differences are:

1. There is no ancillary equipment mounted on the skid.

2. The skid is mounted on a surface with sliding support bearings and hydraulic positioners to provide alignment of the cask with the HSM. Brackets with locking bolts are provided to prevent movement during trailer towing.

3. The hydraulic ram is mounted on the skid or, as an option, the ram can be set-up using a frame structure bolted to the cask bottom and a rear support tripod.

4. The cask support skid is mounted on a low profile heavy haul industrial trailer.

The cask support skid utilized for the standardized NUHOMS® system is illustrated in Figure 1.3-8. The plant's fuel/reactor building crane is used to lower the cask onto the support skid which is secured to the transport trailer. Specific details of this operation and the fuel/reactor building arrangement are covered by the provisions of plant's 10CFR50 operating license. The cask support skid, when mounted on the transport trailer, is approximately 1.5m (5'-0") high at the trunnion supports x 3.2m (10'-6") wide x 7.3m (24'-0") long. With the ram in place, the overall length of the skid and ram is approximately 8.2m (27'). During transport operations the bottom of the transfer cask is approximately 1.5m (5 feet) above the ground surface when secured to the support skid/transport trailer as discussed above.

Hydraulic Ram: The hydraulic ram system consists of a hydraulic cylinder with a capacity and a reach sufficient for DSC loading and unloading to and from the HSM. The hydraulic ram has a capacity of 360 kN (80,000 lbf) and a piston stroke of 6.1m to 6.5m(20 to 21.5 feet). Figure 1.3-9 shows a typical NUHOMS® hydraulic ram system. The design of the ram support system provides a direct load path for the hydraulic ram reaction forces during DSC transfer. The system uses an adjustable rear ram support for alignment at the rear of the ram, and a fixed set of trunnion towers as a front support. The design provides positive alignment of the major components during DSC transfer. During DSC transfer the ram reaction forces are transferred through the frame support into the transfer cask, and from the cask to the HSM through the cask restraints.

1.3.3 System Operation

The primary operations (in sequence of occurrence) for the NUHOMS® system are:

1. Cask Preparation
2. DSC Preparation
3. Placement of DSC in Cask
4. Water Filling and DSC/Cask Annulus Sealing
5. Cask Lifting and Placement in Fuel Pool
6. DSC Spent Fuel Loading
7. DSC Top Shield Plug Placement
8. Cask Lifting from Pool
9. Inner DSC Seal Weld Installation
10. DSC Drying and Helium Backfilling
11. Outer DSC Seal Weld Installation
12. Cask Cover Plate Installation
13. Placement of Cask on Transport Skid/Trailer
14. Transport of Loaded Cask to HSM

15. Cask/HSM Preparation and Alignment
16. Transfer of DSC into HSM
17. Storage
18. Retrieval

These operations are shown schematically in Figure 1.3-10 and are described in the following paragraphs. The descriptions are intended to be generic. Plant specific requirements may affect these operations and are to be addressed by the licensee.

Cask Preparation: Cask preparation includes exterior washdown and interior decontamination. These operations are performed on the decontamination pad/pit outside the fuel pool area. The operations are similar to those for a shipping cask which are performed by plant personnel using existing procedures.

DSC Preparation: The internals and externals of the DSC are thoroughly washed or wiped down. This ensures that the newly fabricated DSC will meet existing plant cleanliness requirements for placement in the spent fuel pool.

Placement of DSC in Cask: The empty DSC is inserted into the transfer cask. Proper alignment is assured by visual inspection of the alignment match marks on the DSC and cask.

Fill with Water and Seal Cask/DSC Annulus: The transfer cask and DSC inside the cask are filled with water. This prevents an in-rush of pool water as they are placed in the pool. The DSC/cask annulus is sealed prior to placement in the pool. This prevents contamination of the DSC outer surface by the pool water.

Cask Lifting and Placement in Pool: The water-filled transfer cask, with the DSC inside, is then lifted into the fuel pool and positioned in the cask laydown area. The liquid neutron shield may be drained to meet hook weight limitations.

DSC Spent Fuel Loading: Spent fuel assemblies are placed into the DSC basket. This operation is identical to that presently used at plants for shipping cask loading.

DSC Top Shield Plug Placement: This operation consists of placing the DSC top shield plug onto the DSC using the plant's crane.

Lifting Cask from Pool: The loaded cask is lifted out of the pool and placed (in the vertical position) on the drying pad in the decon pit. This operation is similar to that used for shipping cask handling operations. Liquid neutron shield, if drained, shall be filled.

Inner DSC Sealing: Using a pump, the water level in the DSC is lowered below the inside surface of the DSC top shield plug. The inner top cover plate is put in place and a seal weld is made

between the edge of the cover plate and the DSC shell. This weld provides the inner seal for the DSC.

DSC Drying and Backfilling: The initial blow-down of the DSC is accomplished by pressurizing the vent port with nitrogen, helium or shop air. The remaining liquid water in the DSC cavity is forced out the siphon tube and routed back to the fuel pool or to the plant's liquid radwaste processing system, as appropriate. The DSC is then evacuated to remove the residual liquid water and water vapor in the DSC cavity. When the system pressure has stabilized, the DSC is backfilled with helium and re-evacuated. The second backfill and evacuation ensures that the reactive gases remaining are less than 0.25% by volume. After the second evacuation, the DSC is again backfilled with helium and slightly pressurized. A helium leak test of the inner seal weld is then performed. The helium pressure is then reduced, the helium lines removed, and the siphon and vent port penetrations seal welded closed.

Outer DSC Sealing: After helium backfilling, the DSC outer top cover plate is installed by placing a second seal weld between the cover plate and the DSC shell. Together with the inner seal weld, this weld provides a redundant seal at the upper end of the DSC. The lower end has redundant seal welds which are installed and tested during fabrication. The NUHOMS®-61BT DSC is designed and tested to be leak tight per ANSI N14.5-1997 as described in Appendix K.

Cask/DSC Annulus Draining and Top Cover Plate Placement: The transfer cask is drained, removing the demineralized water from the cask/DSC annulus. A swipe is then taken over the DSC exterior at the DSC top cover plate and the upper portion of the DSC shell. Clean demineralized water is flushed through the cask/DSC annulus to remove any contamination left on the DSC exterior as required. The transfer cask top cover plate is then put in place using the plant's crane. The cask lid is bolted closed for subsequent handling operations.

Placement of Cask on Transport Trailer Skid: The transfer cask is then lifted onto the cask support skid. The plant's crane is used to downend the cask from a vertical to a horizontal position. The cask is then secured to the skid and readied for the subsequent transport operations.

Transport of Loaded Cask to HSM: Once loaded and secured, the transport trailer is towed to the ISFSI along a predetermined route on a prepared road surface. Upon entering the ISFSI secured area, the transfer cask is generally positioned and aligned with the particular HSM in which a DSC is to be transferred.

Cask/HSM Preparation: At the ISFSI with the transfer cask generally positioned in front of the HSM, the cask top cover plate is removed. The transfer trailer is then backed into close proximity with the HSM and the HSM door is removed. The skid positioning system is used for the final alignment and docking of the cask with the HSM.

Loading DSC into HSM: After final alignment of the transfer cask, HSM, and hydraulic ram; the DSC is pushed into the HSM by the hydraulic ram (located at the rear of the cask).

Storage: After the DSC is inside the HSM, the hydraulic ram is disengaged from the DSC and withdrawn through the cask. The transfer trailer is pulled away, the DSC axial retainer is inserted and the HSM access door installed. The DSC is now in safe storage within the HSM.

Retrieval: For retrieval, the transfer cask is positioned and the DSC is transferred from the HSM to the cask. The hydraulic ram is used to pull the DSC into the cask. All transfer operations are performed in the same manner as previously described. Once back in the cask, the DSC with its SFAs is ready for return to the plant fuel pool or for direct off-site shipment to a repository or another storage location.

1.3.4 Arrangement of Storage Structures

The DSC, containing the SFAs, is transferred to, and stored in, the HSM in the horizontal position. Multiple HSMs are grouped together to form arrays whose size is determined to meet plant-specific needs. Arrays of HSMs are arranged within the ISFSI site on a concrete pad(s) with the entire area enclosed by a security fence. Individual HSMs are arranged adjacent to each other, spaced a small distance apart for ventilation. The decay heat for each HSM is primarily removed by internal natural circulation flow and not by conduction through the HSM walls. Figure 1.3-11, Figure 1.3-12 and Figure 1.3-13 show typical layouts for NUHOMS® ISFSIs which are capable of modular expansion to any capacity. The parameters of interest in planning the installation layout are the configuration of the HSM array and an area in front of each HSM to provide adequate space for backing and aligning the transport trailer.

There is no explicit requirement regarding the sequence of HSM loading. It is expected that all loading sequences will leave one or more HSMs vacant for a period of time prior to loading.

Table 1.3-1
Components, Structures and Equipment for the Standardized NUHOMS® System

Dry Shielded Canister[1]

Internal Basket Assembly:

Guide Sleeves	(24 for 24P & 24PT2)
Oversleeves	(24P & 24PT2)
Fixed Neutron Absorbers	(88 for 52B; 72 for 24PT2)
Spacer Disks	(8 for 24P; 9 for 52B; 26 for 24PT2)
Support Rods	(4 for 24P; 6 for 52B; 4 for 24PT2)
Spacer Sleeves	(52B & 24PT2)

Cylindrical Shell

Shield Plugs (top and bottom)

Inner and Outer Cover Plates (top and bottom)

Siphon and Vent Port

Grapple Ring

Horizontal Storage Module

Reinforced Concrete Walls, Roof, and Floor

DSC Support Structure

DSC Axial Retainer

Cask Docking Flange and Cask Restraint Eyes

Heat Shield

Shielded Access Door

Ventilation Air Openings (four inlets, four outlets)

(1) For the NUHOMS®-61BT DSC, see Appendix K.

Table 1.3-1
Components, Structures and Equipment for the Standardized NUHOMS® System
(concluded)

On-Site TC

Cask Structural Shell Assembly

Bolted Top Cover Plate

Upper Lifting Trunnions

Lower Support Trunnions

Lead Gamma Shielding

Inner Liner

Outer Jacket

Neutron Shielding

Ram Access Penetration Cover Plate

Transport Trailer

Heavy-Haul Industrial Trailer

Cask Support Skid

Skid Positioning System

Hydraulic Ram System

Hydraulic Cylinder and Supports

Hydraulic Power Supply

Grapple Assembly

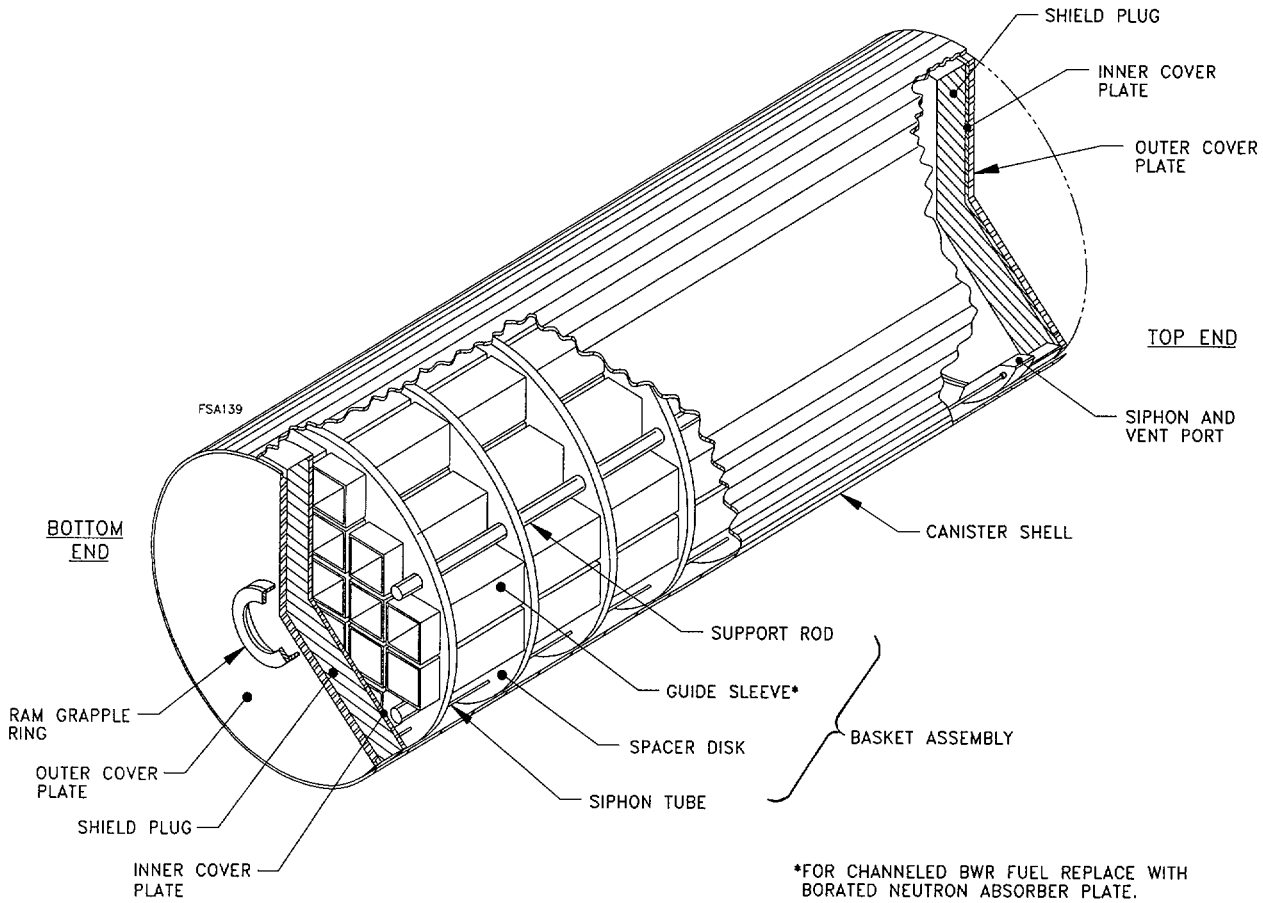

Figure 1.3-1
NUHOMS® Dry Shielded Canister Assembly Components

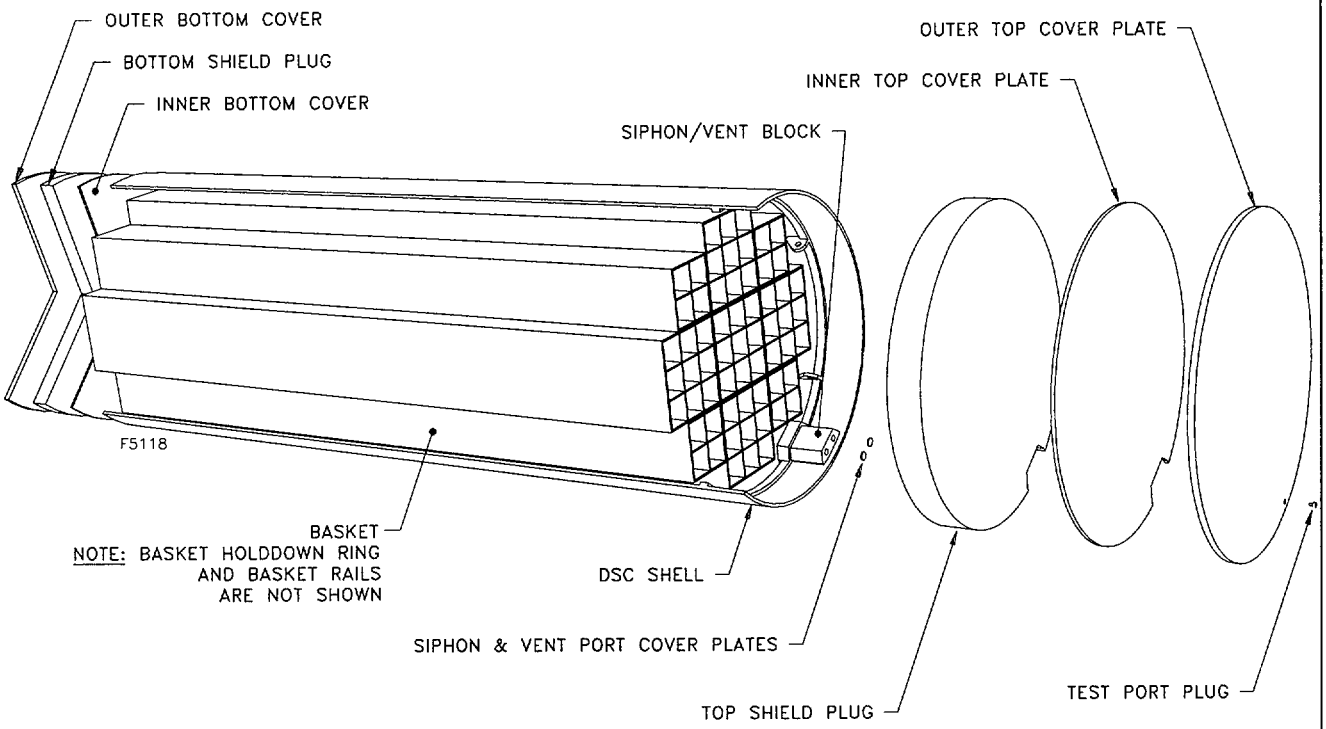

Figure 1.3-1a
NUHOMS®-61BT DSC Components

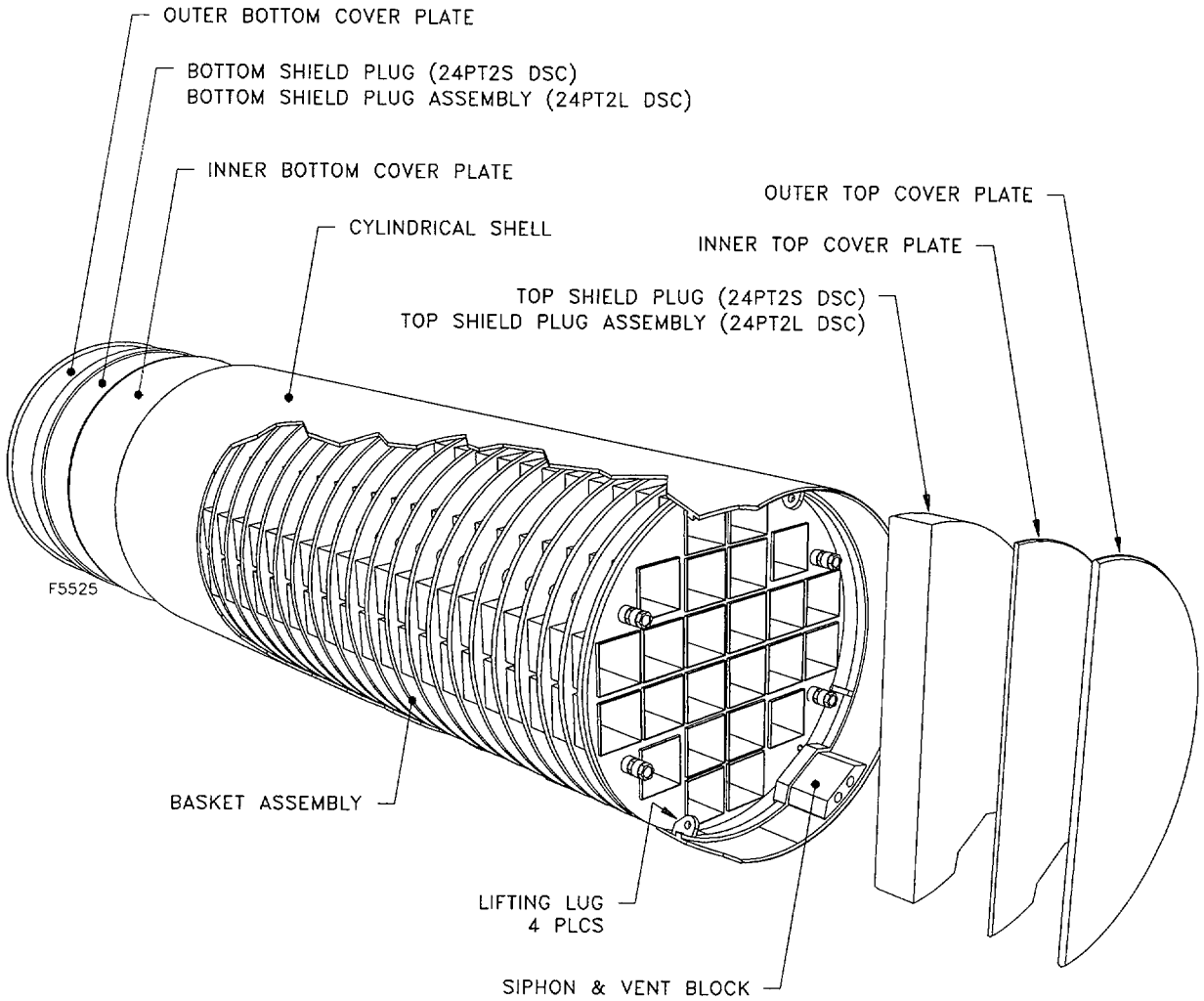

Figure 1.3-1b
NUHOMS®-24PT2 DSC Components

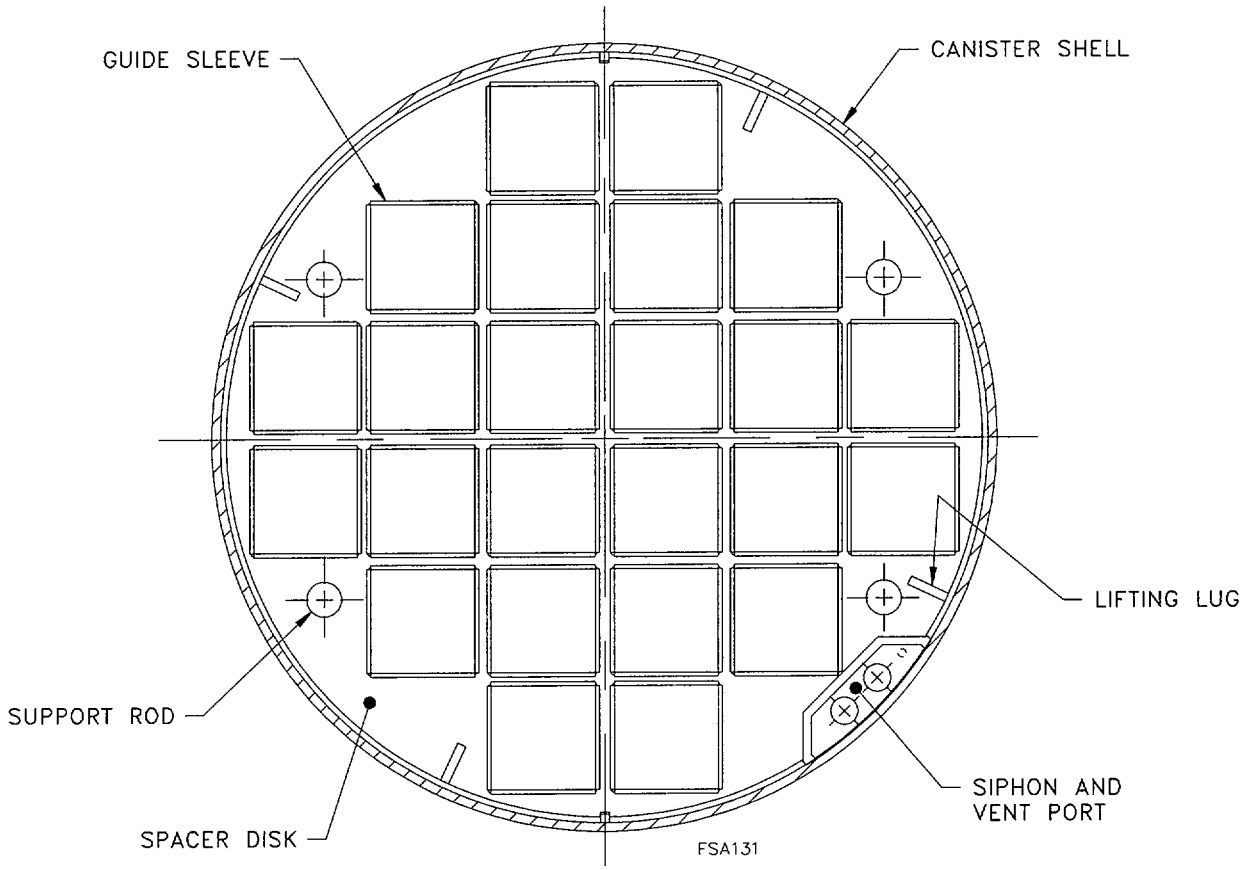

Figure 1.3-2
NUHOMS®-24P Dry Shielded Canister Cross-Section

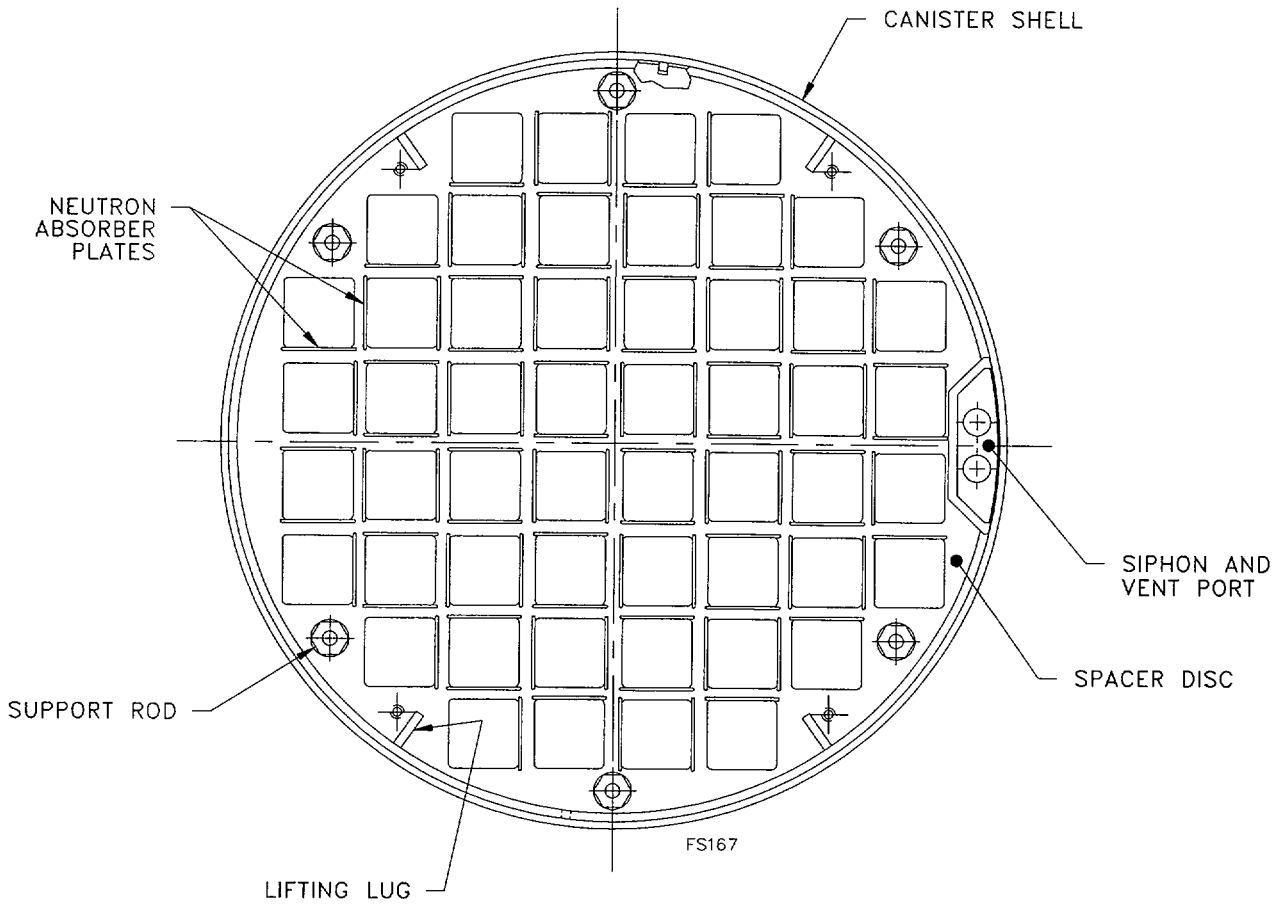

Figure 1.3-3
NUHOMS®-52B Dry Shielded Canister Cross-Section

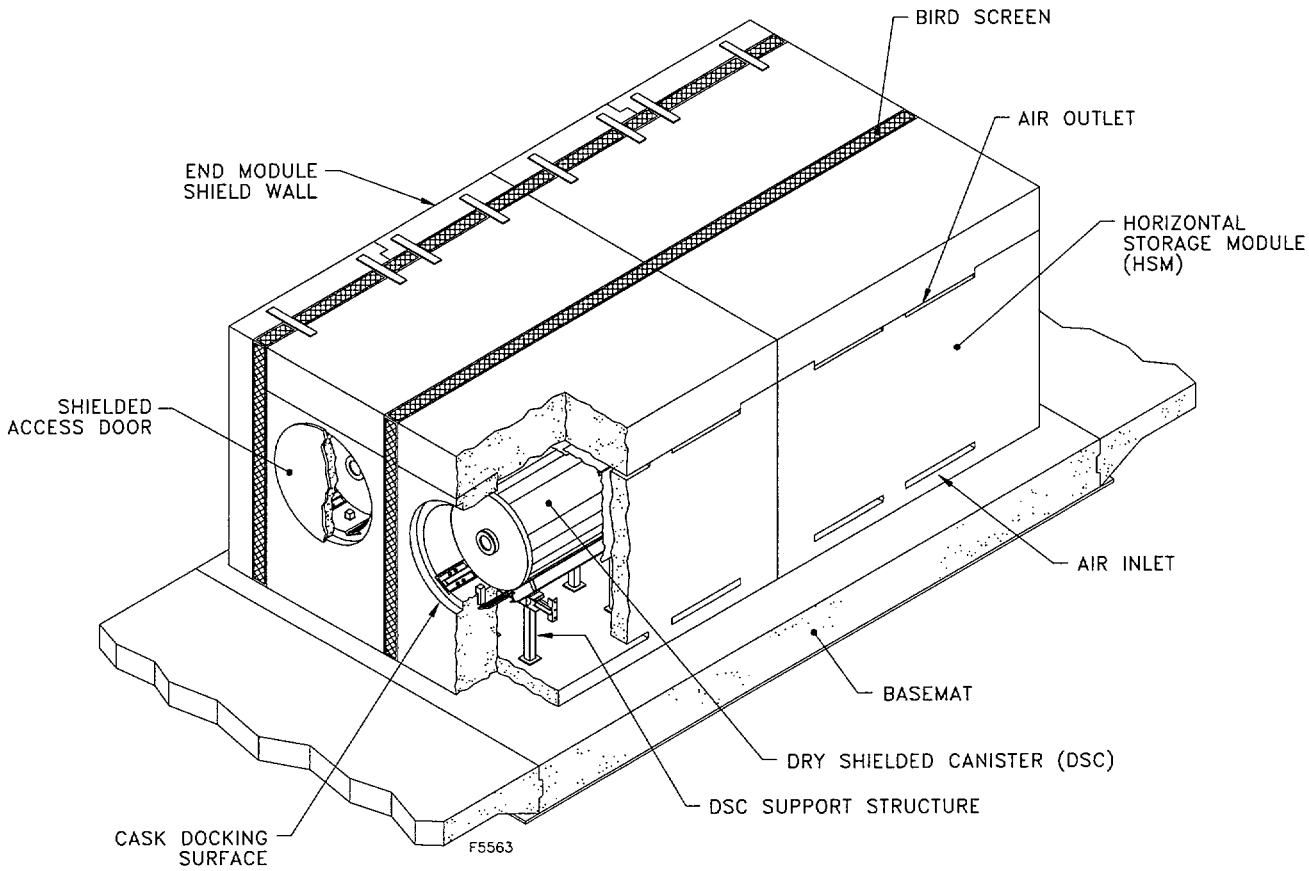

Figure 1.3-4
NUHOMS® Horizontal Storage Module Arrangement

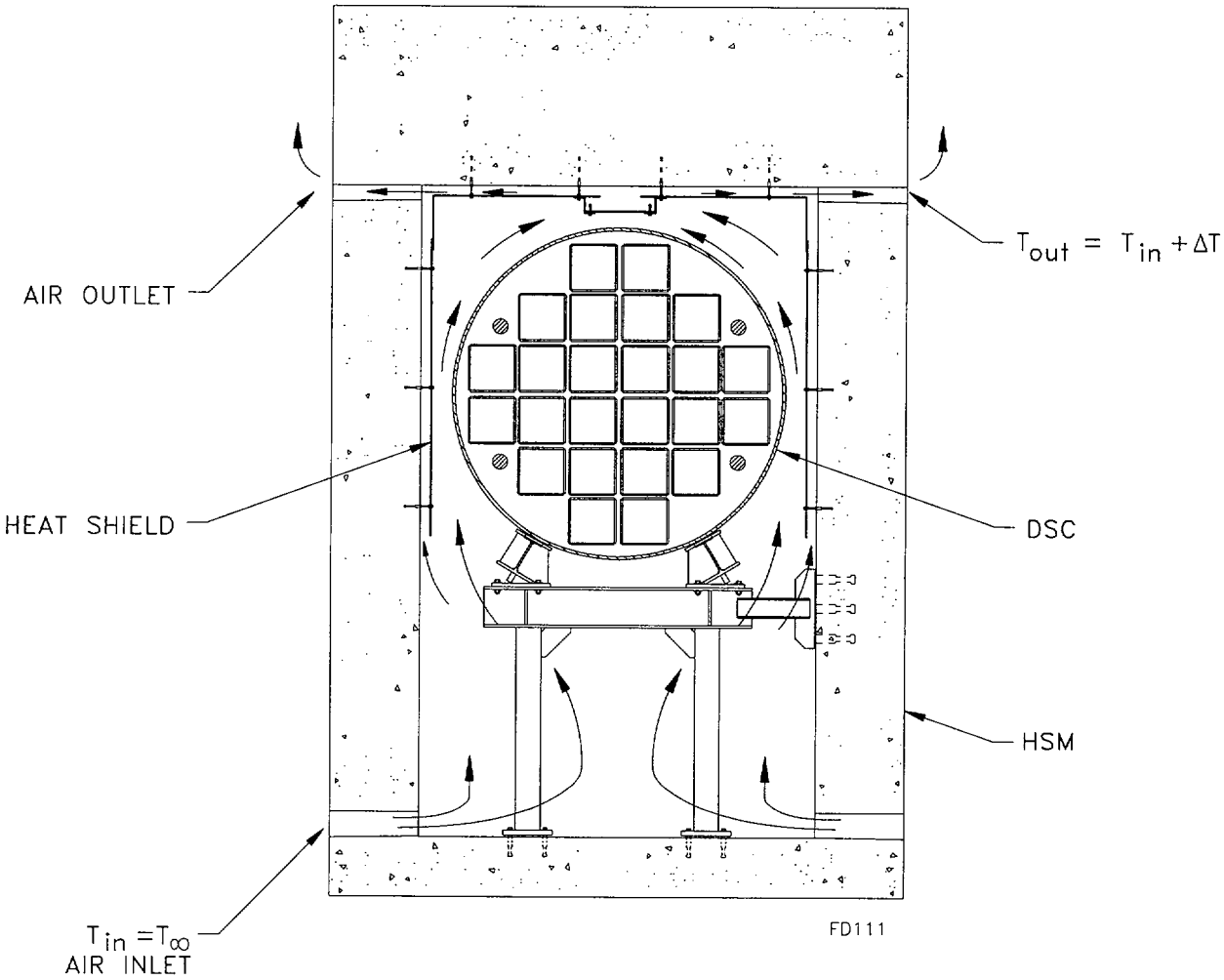

Figure 1.3-5
HSM Ventilation Air Flow Diagram

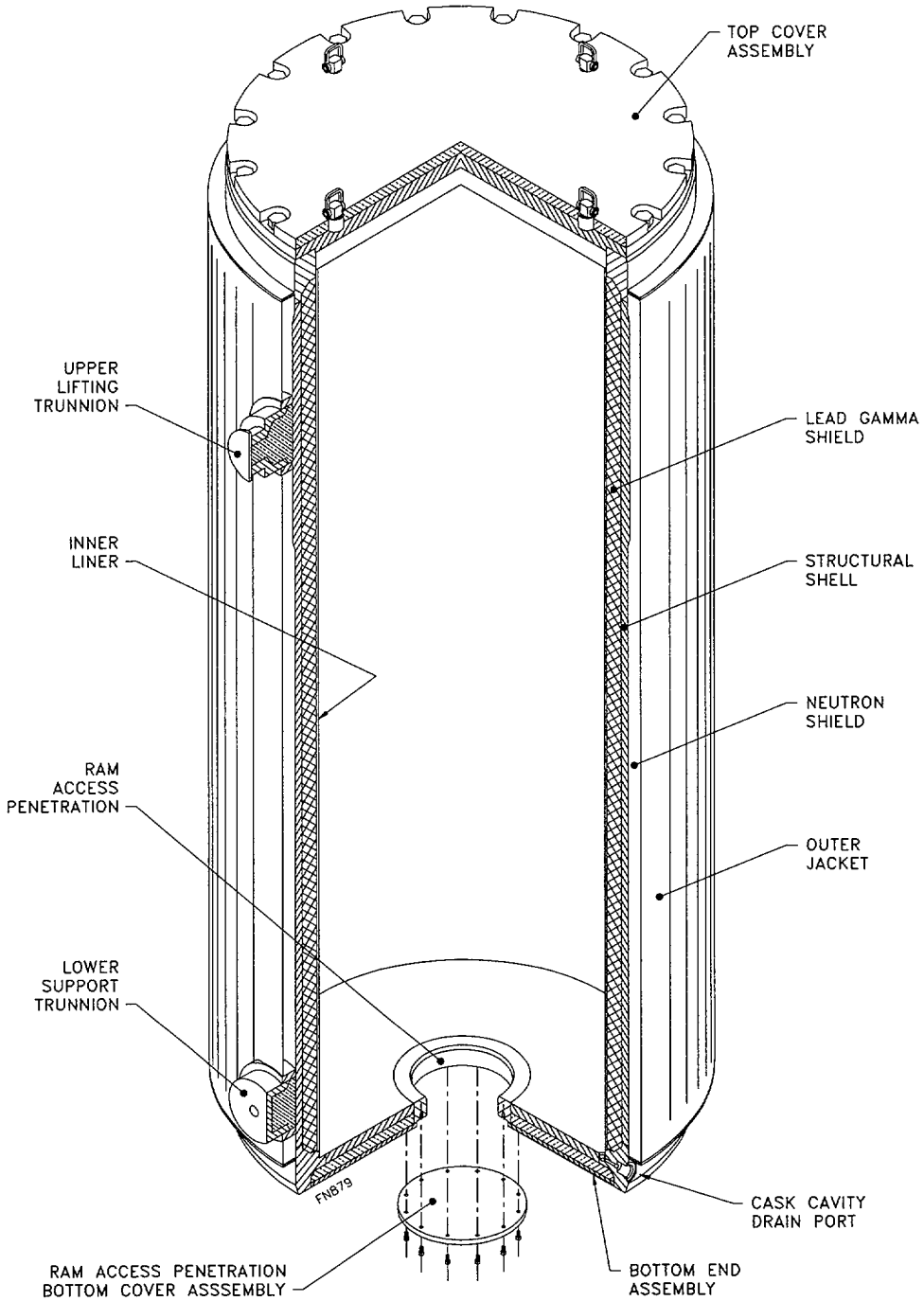

Figure 1.3-6
NUHOMS® On-Site TC

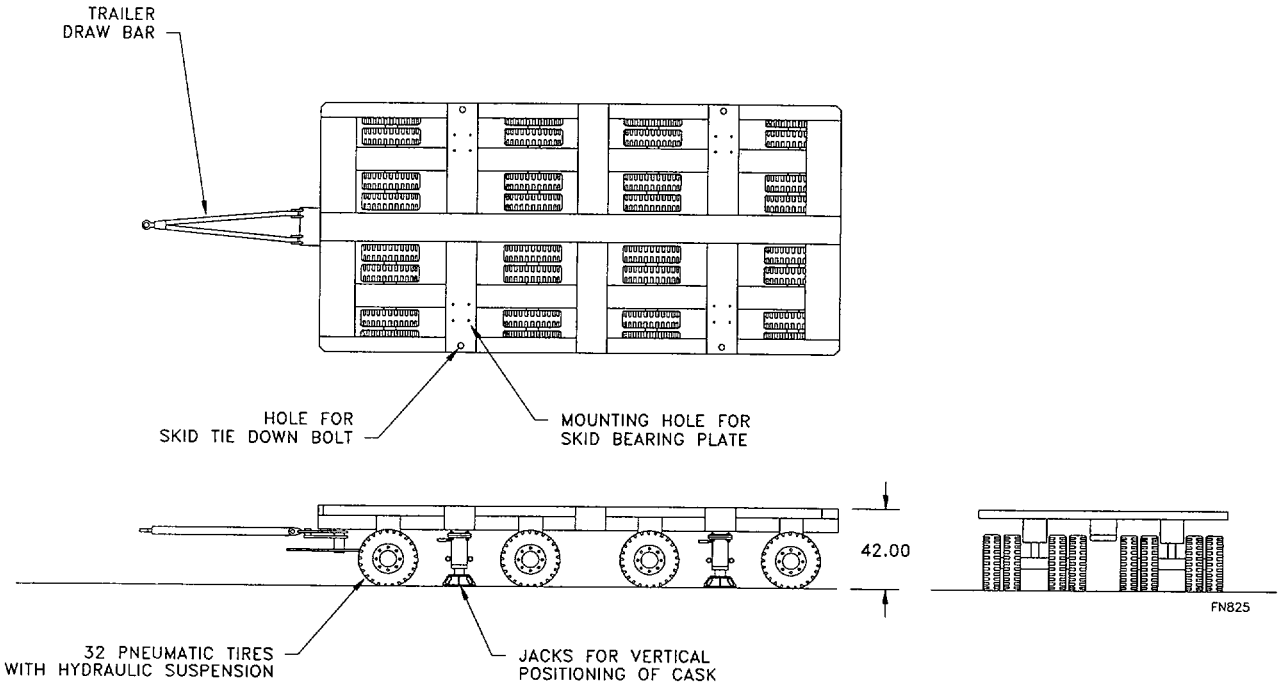

Figure 1.3-7
Transport Trailer for the NUHOMS® System

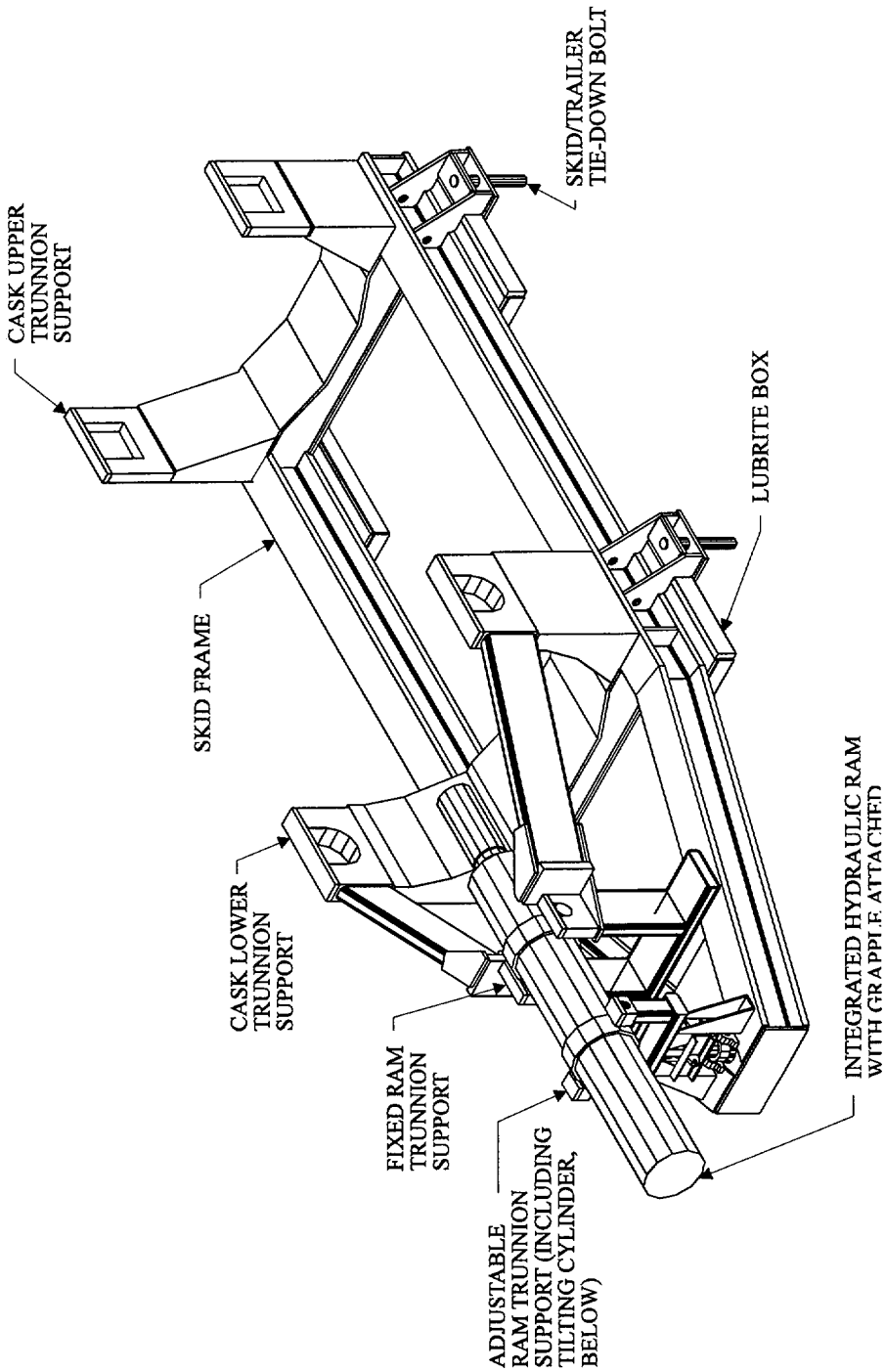

Figure 1.3-8
Cask Support Skid for the NUHOMS® System

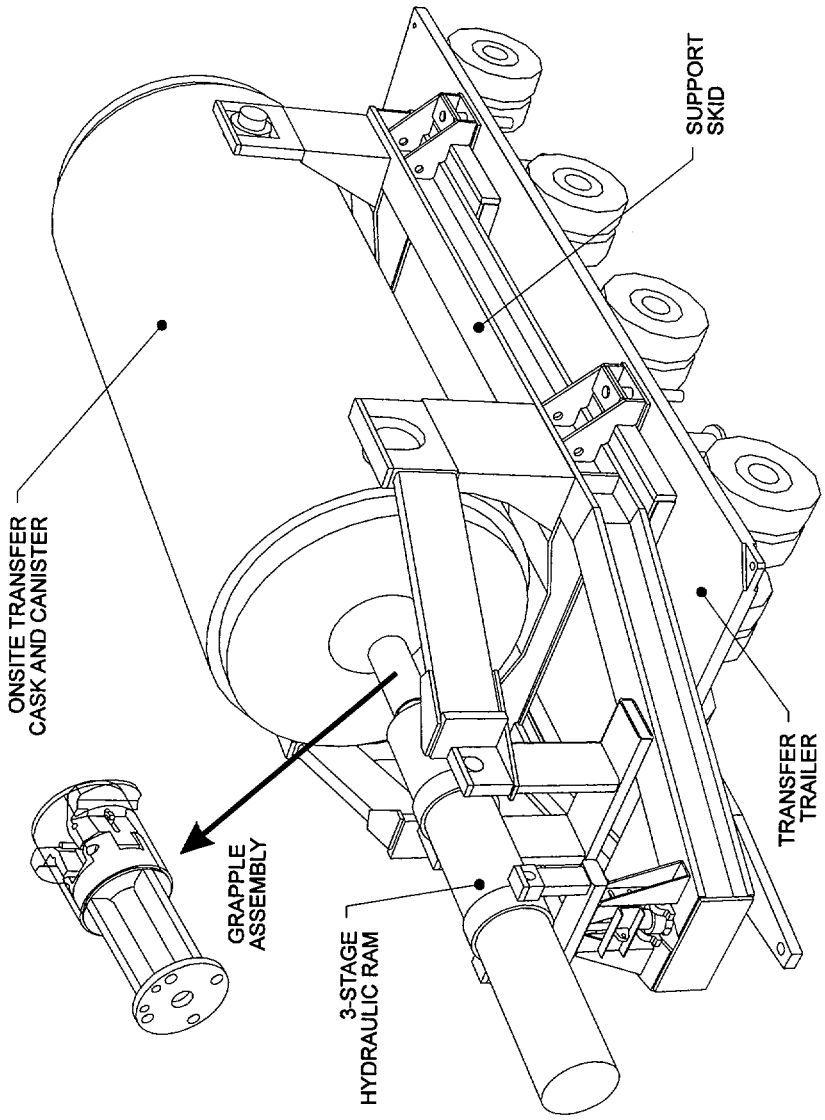

Figure 1.3-9
Hydraulic Ram System for NUHOMS®

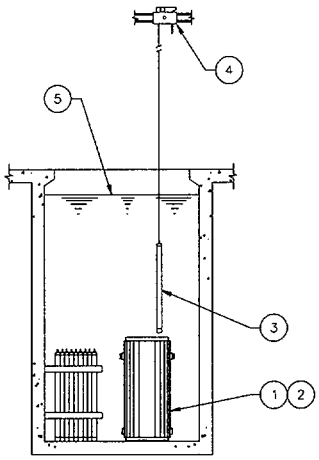

CASK/DSC LOADING

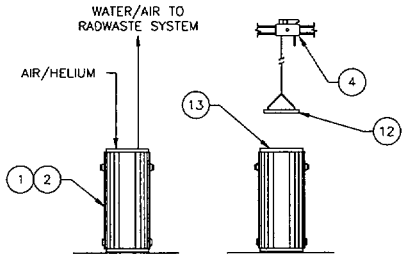

CASK/DSC DRYING AND SEALING

1. TRANSFER CASK
2. DRY SHIELDED CANISTER
3. SPENT FUEL ASSEMBLY
4. OVERHEAD CRANE
5. SPENT FUEL POOL
6. TRANSPORT TRAILER
7. SUPPORT SKID
8. PRIME MOVER
9. SKID POSITIONING SYSTEM
10. HYDRAULIC RAM
11. HORIZONTAL STORAGE MODULE
12. CASK COVER
13. DSC COVER

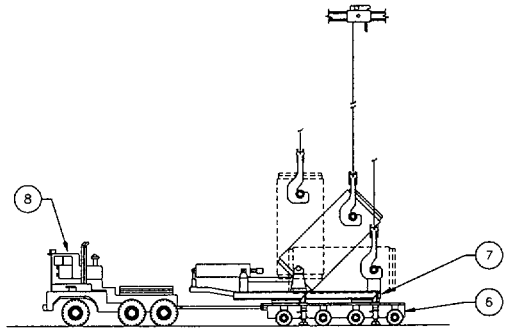

TRANSFER CASK DOWNENDING

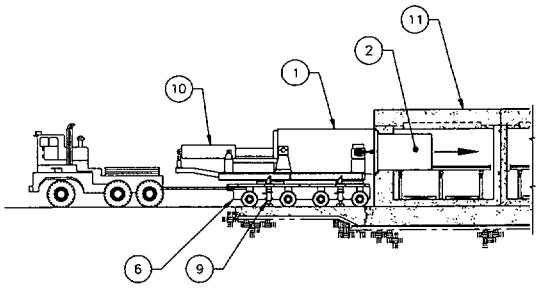

DSC INSERTION

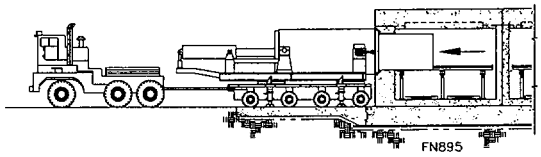

DSC RETRIEVAL

Figure 1.3-10
NUHOMS® System Operational Overview

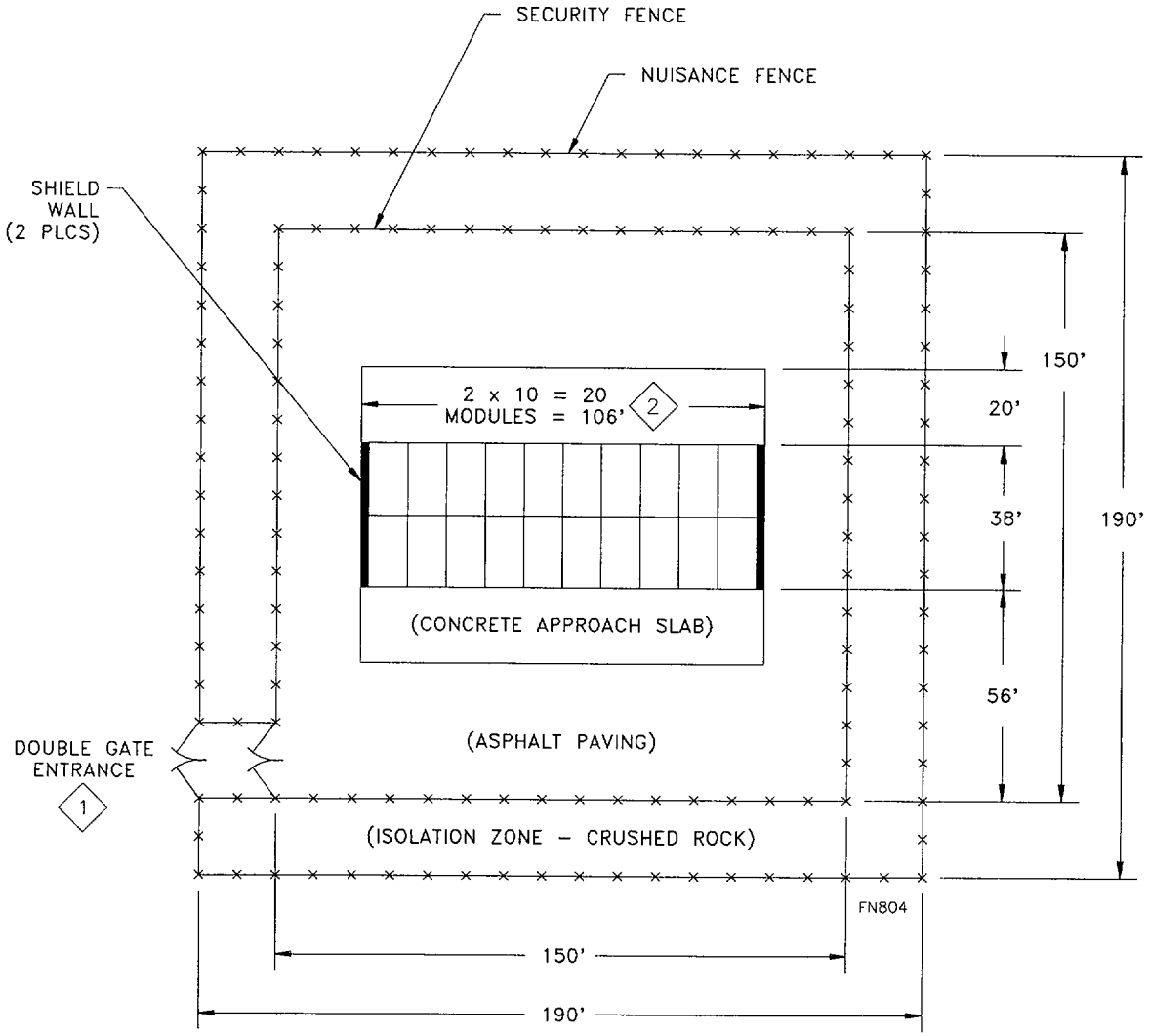

NOTES:

1. LOCATION OF ENTRANCE TO ISFSI TO BE COMPATIBLE WITH PLANT SITE ROADS.
2. NUMBER OF MODULES DETERMINED BY USER BASED ON PLANT DISCHARGE RATES AND DRY STORAGE NEEDS.

Figure 1.3-11
Typical Double Module Row NUHOMS® ISFSI Layout

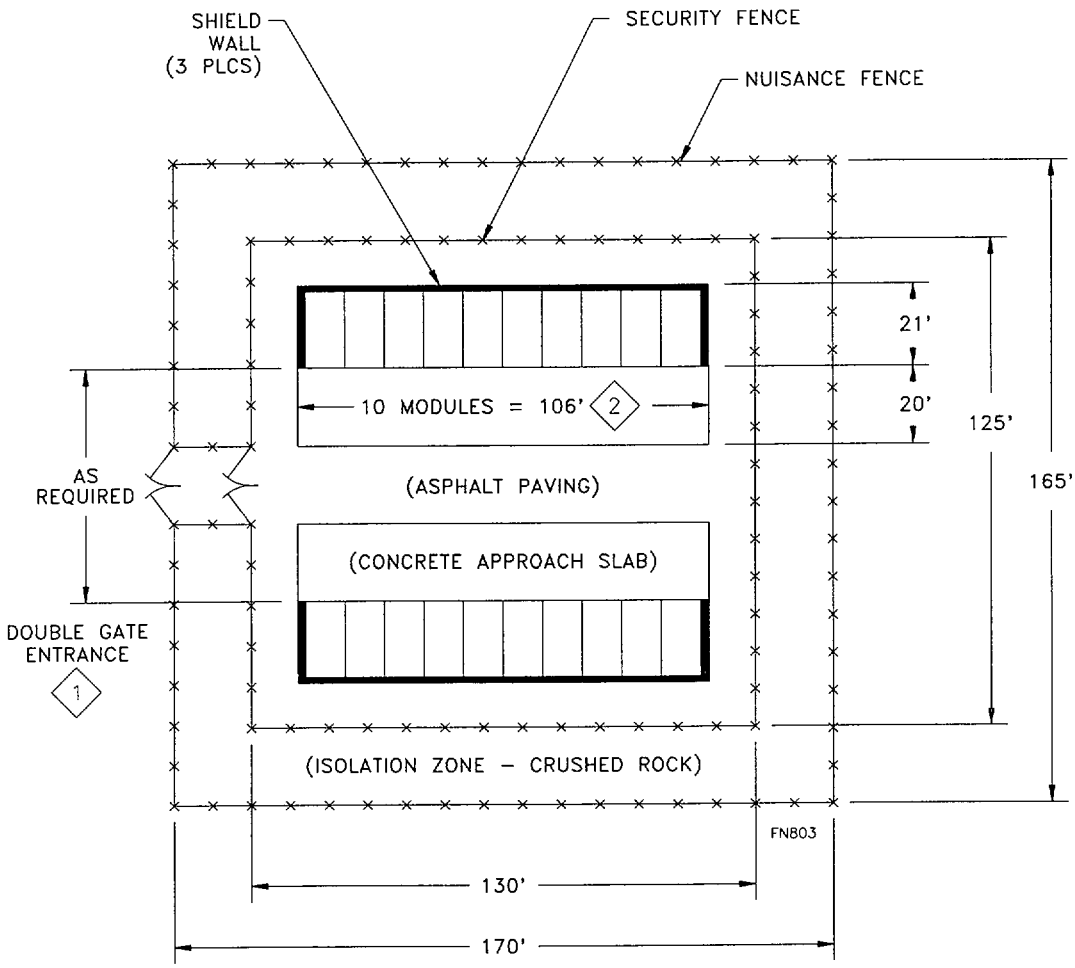

NOTES:

1. LOCATION OF ENTRANCE TO ISFSI TO BE COMPATIBLE WITH PLANT SITE ROADS.
2. NUMBER OF MODULES DETERMINED BY USER BASED ON PLANT DISCHARGE RATES AND DRY STORAGE NEEDS.

Figure 1.3-12
Typical Single Module Row NUHOMS® ISFSI Layout

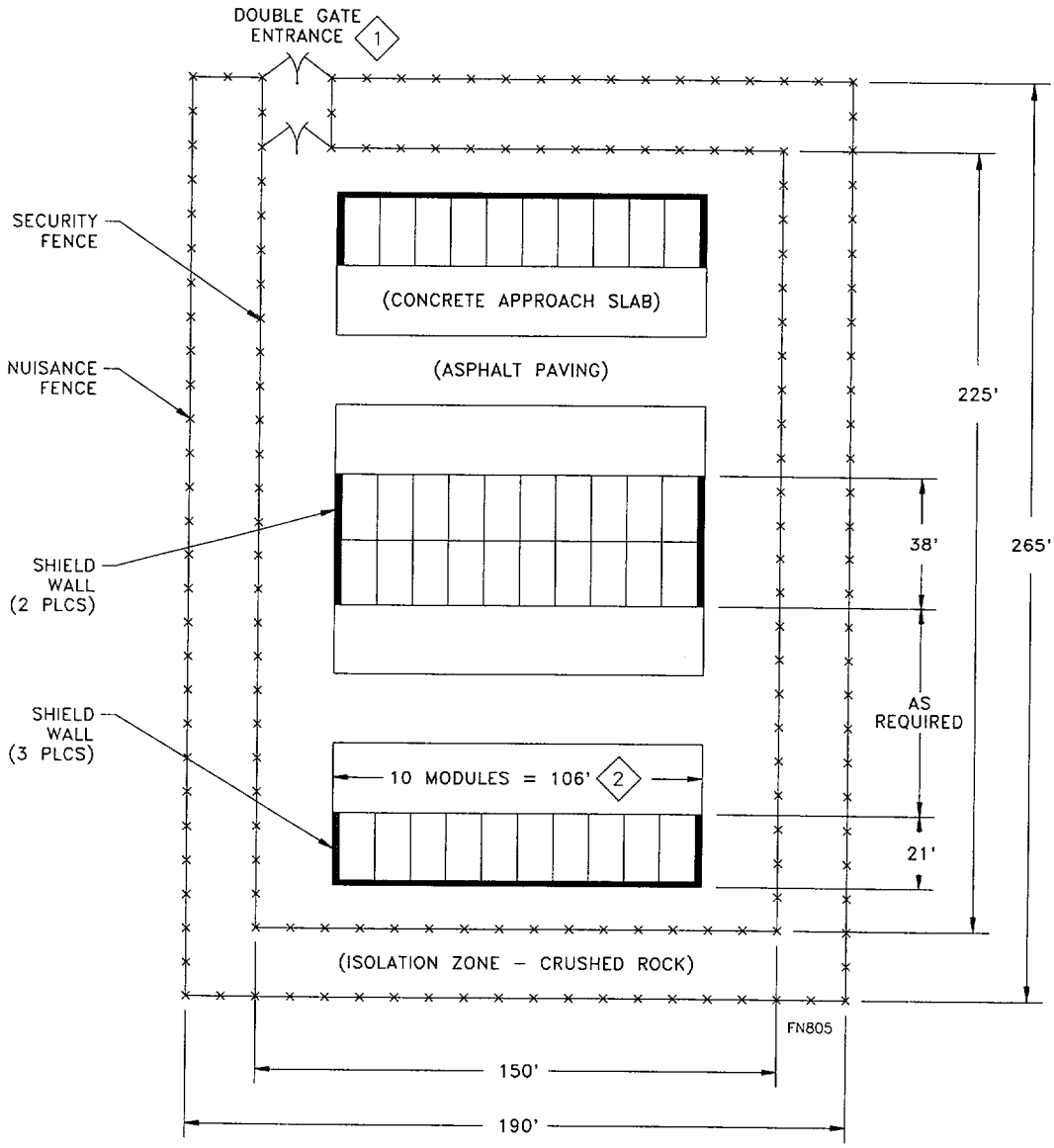

NOTES:

1. LOCATION OF ENTRANCE TO ISFSI TO BE COMPATIBLE WITH PLANT SITE ROADS.
2. NUMBER OF MODULES DETERMINED BY USER BASED ON PLANT DISCHARGE RATES AND DRY STORAGE NEEDS.

Figure 1.3-13
Typical Combined Single and Double Module Row NUHOMS® ISFSI Layout

1.4 Identification of Agents and Contractors

The prime contractor for design and procurement of the NUHOMS® system components is TN West of Fremont, California. TN West will subcontract the fabrication and on-site construction to qualified firms on a project specific basis.

The generic design activities for the NUHOMS® Safety Analysis Report (NUH-003) were performed by TN West with Duke Power Company, Inc. as a subcontractor for the PWR criticality analysis. TN West is responsible for the design and analysis of the DSC, the HSM, the on-site transfer cask, and the associated transfer equipment.

1.5 Material Incorporated by Reference

The approved NUHOMS® Topical Report NUH-002, for the NUHOMS®-24P system inclusive of Revision 2A is used as a direct reference for this SAR (1.10). Information has been added to document the generic design criteria and safety analysis for the standardized NUHOMS® system. Editorial changes have also been made to add clarity where necessary. All technical changes in this SAR revision have been identified with a vertical line in the right/left hand margin of each page. Where technical material has not been revised, no vertical line appears in the right hand margin of the page. Information provided for completeness and clarity but not for NRC review and approval is so indicated.

1.6 References

1.1 U.S. Government, "Licensing Requirements for the Storage of Spent Fuel in An Independent Spent Fuel Storage Installation," Title 10 Code of Federal Regulations, Part 72, Office of the Federal Register, Washington DC.

1.2 U.S. Nuclear Regulatory Commission, "Standard Format and Content for the Safety Analysis Report for an Independent Spent Fuel Storage Installation (Dry Storage)," Regulatory Guide 3.48, U.S. NRC (1981).

1.3 Deleted

1.4 Deleted

1.5 Deleted

1.6 Deleted

1.7 Deleted

1.8 Deleted

1.9 Deleted

1.10 Pacific Nuclear Fuel Services, Inc. "Approved Topical Report for the NUTECH Horizontal Modular Storage System for Irradiated Nuclear Fuel - NUHOMS®-24P," NUH-002, Revision 2A, San Jose, California, July 1991 (Docket. M-49).

1.11 U. S. Nuclear Regulatory Commission, Office of Nuclear Materials Safety and Safeguards, "Safety Evaluation Report Related to the Topical Report for the Nutech Horizontal Modular Storage System for Irradiated Nuclear Fuel NUHOMS®-24P Submitted by Nutech Engineers, Inc.," NUH-002, Revision 1, April 1989.

1.12 NUTECH, Inc., "Topical Report for the Nutech Horizontal Modular Storage System for Irradiated Nuclear Fuel," NUH-001, Revision 2A, San Jose, California (Docket. M-39).

1.13 U. S. Nuclear Regulatory Commission, Office of Nuclear Materials Safety and Safeguards, "Safety Evaluation Report for Nutech Horizontal Modular System for Irradiated Fuel Topical Report," March 28, 1986.

1.14 U. S. Nuclear Regulatory Commission, Office of Nuclear Material Safety and Safeguards, "Safety Evaluation Report for a Design Change to the Transfer Cask for the Duke Power Company's Independent Spent Fuel Storage Installation," February 1990.

2. SITE CHARACTERISTICS

The NUHOMS® system is well suited for a wide range of conditions at existing plants including geography, demography, meteorology, hydrology, seismology and geology. For ISFSIs sited within the owner controlled area under the jurisdiction of the current 10CFR50 operating license for the plant, these conditions are addressed in the corresponding sections of the FSAR, USAR or other docketed submittals for the plant.

The high integrity and massive multiple barriers provided by the NUHOMS® system offer substantial safety advantages for siting of an ISFSI. These include the use of storage components which have been designed and qualified for a wide range of enveloping environmental conditions, postulated accidents, and man-made and natural hazards. The DSC and HSM are designed and constructed as important to safety components in accordance with 10CFR72 Subpart G. Furthermore, the NUHOMS® ISFSI does not rely on the foundation to perform its intended safety function. The passive self-contained nature of the NUHOMS® system provides added protection to the public and the surrounding environs.

The requirements for evaluating the acceptability of an ISFSI site are defined in 10CFR72 Subpart K. Some basic considerations for selection of a NUHOMS® ISFSI site are summarized in Section 1.2.6. Additional factors affecting the adequacy of the ISFSI site selected by the licensee as well as the NUHOMS® ISFSI design features provided to address these factors are discussed in the sections which follow.

2.1 Geography and Demography

Siting of a NUHOMS® ISFSI by the licensee should consider the infrastructure and environs in the areas surrounding the plant. A NUHOMS® ISFSI is generally sited in a dedicated secure area of the plant site which is isolated from the plant proper within the owner controlled area. The thick concrete shield walls and slabs utilized for the NUHOMS® HSMs minimize the radiation exposure to the nearest ISFSI neighbor. The contribution of a NUHOMS® ISFSI to the total off-site dose to the public compared to that of the existing plant is minimal and is well within the applicable regulatory limits. All radioactive materials are confined within the DSC and the exterior surface of the DSC is free from contamination to prevent effluent releases to the environment.

2.2 Nearby Industrial, Transportation, and Military Facilities

Siting of a NUHOMS® ISFSI by the licensee should consider the effects of nearby above or below grade industrial, transportation and military facilities as applicable. The NUHOMS® ISFSI is well protected against the potential hazards resulting from accidents postulated for these facilities. The heavy reinforced concrete HSM is an effective barrier against explosions and there are no combustible materials utilized in a NUHOMS® ISFSI. The HSMs are also extremely resistant to the impact of projectiles such as an aircraft or the collapse of any nearby structure which may be postulated to impinge a NUHOMS® ISFSI. The stainless steel containment barrier of the DSC provides an effective means of protection against the effects of potentially damaging airborne pollutants and hazardous chemicals.

2.3 Meteorology

Siting of a NUHOMS® ISFSI by the licensee should take into account the prevailing meteorological conditions of the area surrounding the plant including the atmospheric diffusion characteristics. The NUHOMS® ISFSI is generically qualified for extreme climatology including sustained ambient conditions of -40°F and 125°F with concurrent extreme solar insolation. The configuration of a NUHOMS® ISFSI and the individual DSC and HSM storage components provide an effective means of protection against extreme seasonal weather conditions including heavy precipitation, drifting snow, ice flows, lightning strikes, strong winds and wind driven missiles, and blowing dust. The meteorological conditions and monitoring program for which the plant is currently licensed are generally adequate for a NUHOMS® ISFSI.

2.4 Surface Hydrology

Siting of a NUHOMS® ISFSI by the licensee should take into account the prevailing hydrological conditions in the vicinity of the plant including the effects of waterways, watersheds, flood plains, and tidal conditions. By its massive nature and back-to-back side-by-side configurations, a NUHOMS® ISFSI has substantial capacity to resist flowing water, wave actions and flooding due to extreme precipitation runoff or storm-induced tides.

Although it is desirable that the ISFSI be located above the probable maximum flood height, the DSC and HSM are well suited for flood heights up to 5'-8" above the basemat (for extended periods) with no effect on thermal, criticality, or structural safety margins. Under these conditions, the HSM air inlet vents would be partially or fully blocked and the DSC is elevated above the flood waters inside the HSM. For this bounding generic analysis, the NUHOMS® ISFSI is designed to operate within the applicable acceptance limits for a worst case postulated flood height of 15m (50 feet) above the canister. Under these conditions, the HSM inlet and outlet vents are totally blocked and the DSC is fully submerged but remains leak tight. In

addition, the NUHOMS® ISFSI does not rely on the foundation to perform its intended safety function and is, therefore, not impacted by soil erosion should it occur.

2.5 Subsurface Hydrology

Siting of a NUHOMS® ISFSI by the licensee should take into account the subsurface hydrological conditions in the plant site area including ground water effects. The NUHOMS® ISFSI storage structures are entirely above grade and are founded on a shallow basemat. ISFSI site grading and drainage provisions should be such that adequate quantity and quality of ground water flows are maintained. In addition, the NUHOMS® ISFSI does not rely on the foundation to perform its intended safety function and is therefore not impacted by subsurface hydrological effects.

2.6 Geology and Seismology

Siting of a NUHOMS® ISFSI by the licensee should take into account the geological and seismological conditions of the plant site including the effects of vibratory ground motion, surface faulting, subsurface stability, and slope stability. By its massive nature, high rigidity, low profile, and back-to-back side-by-side configuration, a NUHOMS® ISFSI has extensive capacity to resist geologic and seismologic hazards. The NUHOMS® ISFSI is not limited by seismic loads and is generically qualified for a peak ground acceleration of 0.25g in either horizontal direction and 0.17g in vertical which envelops all sites East of the Rocky Mountains.

Even though the NUHOMS® ISFSI foundation is not considered important to safety, a geotechnical investigation of the ISFSI site should be conducted by the licensee as for any heavy industrial facility. This should include the collection of subsurface soil samples, a laboratory testing program and the preparation of an ISFSI site soil report in accordance with the applicable ASTM standards. The laboratory tests should be conducted on undisturbed samples to classify the soils, measure the physical properties of the soil, measure the soils strength, and measure its compressibility. As for any heavy industrial facility, the basemat design should be appropriate for the geological characteristics of the site and the intended function.

3. PRINCIPAL DESIGN CRITERIA

3.1 Purpose of Installation

The NUHOMS® system provides an ISFSI for horizontal, dry storage (in a helium atmosphere) of SFAs in a high integrity stainless steel DSC which is placed inside a massive reinforced concrete HSM. The function of the DSCs and HSMs is to provide for the safe, controlled, long-term storage of SFAs.

The standardized NUHOMS® system can be utilized to store a wide range of the various light water reactor fuel assembly types which presently reside in spent fuel pools. This SAR addresses the most common types of both PWR and BWR spent fuel. The following subsection provides a description of the spent fuel assemblies which are acceptable for storage using the standardized NUHOMS® system.

The storage capacity of a single standardized NUHOMS® DSC and HSM is 24 PWR fuel assemblies or 52 or 61 BWR fuel assemblies. Multiple HSMs can be grouped together to form arrays which provide the needed storage capacity consistent with available site space and reactor fuel discharge rates.

3.1.1 Material to be Stored

The inventory of PWR fuel types which currently resides in spent fuel pools in the U.S. is shown in Figure 3.1-1. B&W 15x15 fuel is selected as the enveloping fuel design for a wide range of PWR fuel types as it is the most reactive and has the most limiting physical characteristics. Table 3.1-1 lists the principal design parameters for the B&W 15x15 fuel selected as the design basis for the standardized NUHOMS®-24P and -24PT2 systems documented in this SAR. Table 3.1-1a lists the PWR fuel assembly designs (with or without BPRAs) that have currently been demonstrated to be suitable for storage in the standardized NUHOMS®-24P and -24PT2 systems provided they meet the requirements of the Technical Specifications of CoC 1004. Similarly, the inventory of BWR fuel types residing in spent fuel pools in the U.S. is shown in Figure 3.1-2. GE 7x7 fuel is selected as the enveloping fuel design for a wide range of BWR fuel types. Table 3.1-2 lists the principal design parameters for the GE 7x7 fuel selected as the design basis for the standardized NUHOMS®-52B system documented in this SAR. Table 3.1-2a lists the BWR fuel designs which have currently been demonstrated to be suitable for storage in the standardized NUHOMS®-52B system provided they meet the requirements of the Technical Specifications of CoC No. 1004. Appendix K lists the principal design parameters for the NUHOMS®-61BT system.

The following acceptance criteria is established for BWR and PWR fuels other than the SAR design basis fuels.

A. For shielding, the gamma and neutron source strengths (from fuel and BPRAs, if applicable) and resulting HSM contact roof doses must be less than or equal to the limits set forth by this SAR.

B. For thermal, if applicable, the total DSC decay heat , including the decay heat from BPRAs and the resulting temperatures must be less than or equal to the limits set forth by this SAR.

C. For criticality, the initial enrichment and resulting reactivity must be less than or equal to the limits set forth by this SAR.

D. For structural, the fuel weight (including the BPRA weight, if applicable) and the total weight of the DSC and transfer cask must be less than or equal to the limits set forth by this SAR.

The operating controls and limits for PWR and BWR fuel qualified for dry storage in the standardized NUHOMS® system are specified in Technical Specifications 1.2 of CoC 1004. The parameters for acceptable candidate fuel assemblies for dry storage are described further in the subsections which follow.

3.1.1.1 Physical Characteristics

The standardized NUHOMS® system can be utilized to store the PWR and BWR fuel assemblies shown in Figure 3.1-1 and Figure 3.1-2 and in Fuel Specification 1.2.1 of CoC 1004. The PWR fuel types which exist are more varied as indicated by Table 3.1-3. PWR assemblies with installed Burnable Poison Rod Assemblies (BPRAs) may be stored provided the total physical, radiological, and thermal parameters are bounded by Table 3.1-1 and in Fuel Specification 1.2.1 of CoC 1004. Refer to Appendix J of this SAR for a detailed discussion of BPRAs authorized for storage. The key physical parameters of interest are the weight, length, and cross-sectional dimensions. The values of these parameters form the basis for the mechanical and structural design of the DSC and its internals. The DSC and transfer cask designs for the NUHOMS® system presented in this SAR are based on the B&W 15x15 fuel assembly parameters listed in Table 3.1-1 and the GE 7x7 fuel assembly parameters listed in Table 3.1-2.

3.1.1.2 Thermal Characteristics

The key parameters utilized to determine the heat removal requirements for the NUHOMS® system design is the SFA decay heat power. The total decay heat power per spent fuel assembly is dependent on the average burnup per assembly and the cooling time. To a lesser extent, total decay heat power is dependent on the initial enrichment, specific power (MW/MTU) and neutron flux energy spectrum. The total heat rejected to the DSC and HSM for PWR fuel is conservatively taken to be less than or equal to 1.00 kilowatt per fuel assembly (24.0 kW/DSC) for fuel which is cooled 5 years or more. Similarly, the heat rejected from BWR fuel is conservatively taken to be less than or equal to be 0.37 kilowatt per fuel assembly (19.2 kW/DSC for the 52B DSC) for fuel

which is cooled 5 years or more. Other cooling times are acceptable provided the total batch average decay heat per canister are not exceeded.

For thermal characteristics, fuel assembly burnup and cooling time can be used to determine the acceptability of a candidate SFA for dry storage using the NUHOMS® system. As such, if the burnup and cooling time for an assembly are known, the Fuel Specification 1.2.1 of CoC 1004 and/or fuel specific calculations can be used to determine its acceptability for dry storage using the NUHOMS® system. Established methods, such as specific ORIGEN calculations for a candidate fuel assembly to determine calorimetry or burnup test measurements, are acceptable for determining the acceptability of the candidate SFA. A simplified approach for users of the NUHOMS® storage system in selection of acceptable fuel assemblies during loading is provided in Tables 3.1-8a, 3.1-8b and 3.1-8c.

3.1.1.3 Radiological Characteristics

The limits for three fuel management parameters including initial enrichment, burnup, and cooling time as specified in Fuel Specification 1.2.1 of CoC 1004 must be met. Using these parameters as acceptance criteria, existing records and plant procedures form the basis for controlling the selection and placement of candidate fuel assemblies.

3.1.2 General Operating Functions

Functional Overview of the Installation (for information only)

A NUHOMS® ISFSI is designed to maximize the use of existing plant features and equipment, and to minimize the need to add or modify equipment. The ISFSI may be located away from the existing plant security boundary such that a separate protected area is created. The only services required from the plant during the ongoing passive storage mode is through security surveillance equipment located in the plant Central Alarm Station (CAS) and Secondary Alarm Station (SAS). The ISFSI should be included in routine daily security patrols for the plant site conducted by the licensee. The power provided for the ISFSI security system and lighting is obtained from a retail source. Other support services from the plant are necessary only during DSC transfer and retrieval operations.

For the NUHOMS® system, SFAs are loaded into the DSC as discussed in Section 1.3. During loading, the DSC is resting in the cavity of the transfer cask, in the fuel pool cask laydown area. After removal from the pool, the DSC is dried and backfilled with helium. After drying, the DSC (still inside the transfer cask) is moved to the cask skid/trailer and transported to the ISFSI. The DSC is pushed from the transfer cask into the HSM by a hydraulic ram.

Once inside the HSM, the DSC and its payload of SFAs is in passive dry storage. Safe storage in the HSM is assured by a natural convection heat removal system, and massive concrete walls and slabs which act as biological radiation shields. The storage operation of the HSMs and DSCs is totally passive. No active systems are required.

3.1.2.1 Handling and Transfer Equipment

The handling and transfer equipment required to implement the NUHOMS® system includes a cask handling crane at the reactor fuel pool, a cask lifting yoke, a transfer cask, a cask support skid and positioning system, a low profile heavy haul transport trailer and a hydraulic ram system. This equipment is designed and tested to applicable governmental and industrial standards and is maintained and operated according to the manufacturer's specifications. Performance criteria for this equipment, excluding the fuel/reactor building cask handling crane, is given in the following sections. The criteria are summarized in Table 3.1-7.

On-Site Transfer Cask: The on-site transfer cask used for the NUHOMS® system has certain basic features. The DSC is transferred from the plant's fuel pool to the HSM inside the transfer cask. The cask provides neutron and gamma shielding adequate for biological protection at the outer surface of the cask. The cask is capable of rotation, from the vertical to the horizontal position on the support skid. The cask has a top cover plate which is fitted with a lifting eye allowing removal when the cask is oriented horizontally. The cask is capable of rejecting the design basis decay heat load to the atmosphere assuming the most severe ambient conditions postulated to occur during normal, off-normal and accident conditions. For the NUHOMS®-24P DSC or the NUHOMS®-24PT2 DSC, the standardized transfer cask has a cylindrical cavity of 1.73m (68 inches) diameter and 4.75m (186.75 inches) in length and a maximum dry payload capacity of 36,000 Kg (80,000 pounds). For the NUHOMS®-52B or NUHOMS®-61BT, the standardized transfer cask is fitted with an extension collar to accommodate the longer BWR DSC and fuel. Alternatively, the OS197 and OS197H transfer casks with a full length cavity of 5.0m (196.75 inches) may be used for the NUHOMS®-24P (with cask spacer), NUHOMS®-52B or NUHOMS®-61BT DSCs and the NUHOMS®-24PT2 DSC (with cask spacer). The OS197 and OS197H casks can carry a maximum dry payload of 40,800 kg (90,000 lb) and 52,600 kg (116,000 lb), respectively. The cask and the associated lifting yoke are designed and operated such that the consequences of a postulated drop satisfy the current 10CFR50 licensing bases for the vast majority of plants.

The NUHOMS® transfer cask is designed to meet the requirements of 10CFR72 (3.6) for normal, off-normal and accident conditions. The NUHOMS® transfer cask is designed for the following conditions:

A.	Seismic	Reg. Guide 1.60 (3.11) and 1.61 (3.12)

B.	Operational Handling Loads	ANSI/ANS-57.9-1984 (3.36)
C.	Accidental Drop Loads	ANSI/ANS-57.9-1984
D.	Thermal and Dead Loads	ANSI/ANS-57.9-1984
E.	Tornado Wind and Missile Loads	Reg. Guide 1.76 (3.7) and NUREG-0800 (3.8)

Extreme environmental conditions due to tornado generated missiles and floods are not considered to be credible because of the infrequent use (normally four to five times a year) and short period of time (normally about a day) for which the transfer cask is utilized for DSC transfer operations. Nevertheless, the transfer cask is conservatively evaluated for tornado missile impact. The transfer cask is also designed for tornado wind loads in accordance with 10CFR72.122. Since the DSC and the double closure welds on the DSC form the pressure containment boundary for the spent fuel materials, the transfer cask is not designed for internal pressure. Seals are, however, provided for the bottom ram access penetration closure plate to prevent the ingress of contaminated water during DSC loading in the fuel pool.

Cask Support Skid and Positioning System Criteria: The cask support skid and positioning system utilized in the NUHOMS® system has a unique criterion in that it must be capable of transverse movement relative to the transport trailer. The cask support skid is capable of allowing rotation of the cask from vertical to horizontal. The skid does not extend past the top end of the cask in order to allow the HSM cask docking collar to seat with the cask and prevent radiation streaming during DSC transfer.

Transverse movement is necessary to align the cask with the HSM so that the DSC transfer may be accomplished smoothly without sticking or binding. The design uses spherical bearing plates supporting the skid and cask at the four corners of the skid. These bearing plates slide on beams supported by the trailer. The amount of transverse motion required is a few inches. The system has positive locks which prevent any possibility of movement or load shifting during transport.

Trailer Criteria: The heavy-haul vehicle used to transport the cask, skid and DSC from the spent fuel pool to the HSM is a low profile, truck-towed, multi-axle trailer. The principal criteria for the transport trailer are the capacity to bear the weight of the cask and the support skid, plus the additional inertia forces associated with transport operations; to minimize the height and limit the orientation of postulated cask drop accidents, and the HSM height; and to have the ability to adjust the height of the cask in order to achieve precise alignment with the HSM. This latter requirement is accomplished with the support skid positioning system.

Once the height adjustment is complete, the cask support skid is brought into solid contact with the ISFSI approach slab. That is, any springing, such as may result from tires, coil springs or other flexible members, is eliminated from the cask support system in order to prevent cask movement while the DSC is being transferred into the HSM.

Hydraulic Ram System Criteria: The hydraulic ram system consists of a double acting single or multi-stage hydraulic cylinder mounted on a firm base, with a grapple affixed to the piston. It is used to apply a push or pull force to transfer the DSC to and from the cask and HSM. The hydraulic ram is capable of exerting sufficient force during the entire insertion and retrieval strokes to effect the transfer. The ram has the capacity to move the DSC assuming a coefficient of friction of one for the DSC sliding in the cask or in the HSM. The ram is limited to exert a force of 356 kN (80,000 pounds), somewhat greater than the loaded weight of the DSC. The stroke of the ram is sufficient to complete the transfer. The piston when fully extended is able to withstand a compressive load equal to the weight of the loaded DSC. During DSC transfer operations, the ram is firmly attached to the cask to transfer the reaction load during insertion and retrieval.

3.1.2.2 Waste Processing, Packaging and Storage Areas

The only waste produced during the NUHOMS® storage operations is contaminated water drained from the DSC cavity after fuel loading, and the water used to decontaminate the outer surface of the transfer cask after removal from the spent fuel pool. This water is removed from the DSC and cask in the plant's fuel/reactor building and routed back to the spent fuel pool, or the plant's radwaste treatment system.

Likewise, the air and helium evacuated from the DSC during the drying operations may be sampled and checked for radioactive releases. If clean, the gas can be released. If contaminated, the gas is routed to the spent fuel pool or the plant's off-gas processing system where it is filtered and released.

A limited amount of dry active waste is generated from temporary protective clothing and material used during fuel loading, DSC drying, and sealing operations.

The only other waste generated by the NUHOMS® system is the components of storage themselves at the end of their service life. These will be treated and disposed of during ISFSI decommissioning.

Table 3.1-1
Principal Acceptance Parameters for PWR Fuel to be Stored in NUHOMS® -24P and -24PT2 DSC

Title or Parameter	Specifications
Fuel	Only intact, unconsolidated PWR fuel assemblies (with or without BPRAs) with the following requirements.
Physical Parameters (without BPRAs)	
Nominal Assembly Length (unirradiated)	165.75 in (standard cavity) 171.71 in (long cavity)
Nominal Assembly Width (unirradiated)	8.536 in
Maximum Assembly Weight	1682 lbs
No. of Assemblies per DSC	≤ 24 intact assemblies
Fuel Cladding	Zircalloy-clad fuel with no known or suspected gross cladding breaches
Physical Parameters (with BPRAs)	
Maximum Assembly + BPRA Length (unirradiated)	171.71 in (long cavity)
Nominal Assembly Width (unirradiated)	8.536 in
Maximum Assembly + BPRA Weight	1682 lbs
No. of Assemblies per DSC	≤ 24 intact assemblies
No. of BPRAs per DSC	≤ 24 BPRAs
Fuel Cladding	Zircalloy-clad fuel with no known or suspected gross cladding breaches
Nuclear Parameters	
Fuel Initial Enrichment	≤ 4.0 wt. % U-235
Fuel Burnup and Cooling Time	Per Table 3.1-8a (without BPRAs) or Per Table 3.1-8c (with BPRAs)
BPRA Cooling Time (Minimum)	5 years for B&W Designs 10 years for Westinghouse Designs
Alternate Nuclear Parameters	
Initial Enrichment	≤ 4.0 wt. % U-235
Burnup	≤ 40,000 MWd/MTU and per Figure 3.3-3
Decay Heat (Fuel + BPRA)	≤ 1.0 kW per assembly
Neutron Fuel Source	≤ 2.23×10^{8} n/sec per assy with spectrum bounded by that in Chapter 7 of FSAR
Gamma (Fuel + BPRA) Source	≤ 7.45×10^{15} g/sec per assy with spectrum bounded by that in Chapter 7 of FSAR

Table 3.1-1a
PWR Fuel Assembly Designs Suitable for Storage

Type[1]	Width (in)	Assembly Unirradiated Length *(w/o* BPRAs)* *(in)*	Assembly Unirradiated Length *(with BPRAs)* (in)	Assembly Weight *(w/o* BPRAs)* (lbs)	Assembly Weight *(with BPRAs)* (lbs)	Heavy Metal Weight (kg-U)	Cladding Material
B&W 15x15[8]	8.536	165.75	170.875	1550.0	1682.0	475.0	Zircaloy-4
CE 14x14 Fort Calhoun[2]	8.100	147.00	*n/a*	1220.0	*n/a*	365.6	Zircaloy-4
CE 15x15 Palisades[3]	8.250	149.00	*n/a*	1360.0	*n/a*	412.4	Zircaloy-4
CE 14x14 Standard/Generic	8.100	157.00	*n/a*	1270.0	*n/a*	382.2	Zircaloy-4
Westinghouse 14x14[5]	7.763	160.13	*n/a*	1302.0	*n/a*	405.0	Zircaloy-4
Westinghouse 15x15[6]	8.434	160.10	*n/a*	1472.0	*n/a*	460.0	Zircaloy-4
Westinghouse 17x17[7]	8.434	160.10	167.220	1482.0	1663.2	461.0	Zircaloy-4
Limit:	8.536	165.75	171.710	1682.0	1682.0	475.0	

(1) Each fuel assembly must be qualified for storage per *CoC 1004* Technical Specifications.
(2) Includes Exxon/ANF FT. CALHOUN 14 X 14 ANF
(3) Includes Exxon/ANF 15x15 CE
(4) Not used
(5) Includes Exxon/ANF 14x14 Westinghouse
(6) Includes Exxon/ANF 15x15 Westinghouse
(7) Includes Babcock and Wilcox WE 17 X 17 B&W Mark BW
(8) Excludes Westinghouse 15x15 reload fuel for B&W 15x15 reactors

* w/o means without

Table 3.1-2
Principal Acceptance Parameters for BWR Fuel to be Stored in NUHOMS® -52B DSC

Title or Parameter	Specifications
Fuel	Only intact, unconsolidated BWR fuel assemblies with the following requirements
Physical Parameters	
Maximum Assembly Length (unirradiated)	176.16 in
Nominal Assembly Width (unirradiated)	5.454 in
Maximum Assembly Weight	725 lbs
No. of Assemblies per DSC	≤ 52 intact channeled assemblies
Fuel Cladding	Zircaloy-clad fuel with no known or suspected gross cladding breaches
Nuclear Parameters	
Fuel Initial Lattice Enrichment	≤ 4.0 wt. % U-235
Fuel Burnup and Cooling Time	Per Table 3.1-8b
Alternate Nuclear Parameters	
Initial Enrichment	≤ 4.0 wt. % U-235
Burnup	≤ 35,000 MWd/MTU and per Figure 3.3-3
Decay Heat	≤ 0.37 kW per assembly
Neutron Source	≤ 1.01×10^{8} n/sec per assy with spectrum bounded by that in Chapter 7 of FSAR
Gamma Source	≤ 2.63×10^{15} g/sec per assy with spectrum bounded by that in Chapter 7 of FSAR

Table 3.1-2a
BWR Fuel Assembly Designs Suitable for Storage in NUHOMS®-52B DSC

Type[1]	Channeled Width (in)	Unirradiated Length (in)	Assembly Weight (lbs)	Heavy Metal Weight (kg-U)	Cladding Material
GE 6x6 Dresden-1[2]	4.850	136.00	400	111.4	Zircaloy-2
GE 7x7[3]	5.438	175.87	690	194.9	Zircaloy-2
GE 8x8[4]	5.440	176.05	690	186.7	Zircaloy-2
Limit:	5.454	176.16	725	198.0	

(1) Each fuel assembly must be qualified for storage per Technical Specifications of CoC 1004.
(2) Includes Exxon/ANF DRESDEN-1 6x6 ANF.
(3) Includes Exxon/ANF GE BWR 7x7 ANF.
(4) Includes Exxon/ANF GE BWR 8x8 ANF.

Table 3.1-3
General PWR Fuel Assembly Data[1]

Vendor	Array Size/No. of Fuel Rods	Assembly/ Active Fuel Length (m)	Nominal Envelope m(in.)	Weight (kg) (Assembly/ Heavy Metal)	Nominal Distance Between Grid Spacers m(in.)
Babcock & Wilcox (B&W)	15 x 15/208	4.210/3.889	0.2168(8.536)	688/464	0.5365(21.12)
B&W	17 x 17/264	4.207/3.886	0.2168(8.536)	681/454	0.5588(22.00)
Combustion Eng. (CE)	14 x 14/176	4.636/3.810	0.2096(8.25)	558/381	0.4272(16.82)
CE	15 x 15/216	3.788/3.353	0.2117(8.36)	614/405	0.3937(15.50)
CE	16 x 16/236	4.529/3.810	0.2906(8.25)	660/426	0.3763(14.81)
Westinghouse (W)	14 x 14/179	4.084/3.658	0.1972(7.763)	573/405	0.6652(26.19)
W	15 x 15/204	4.097/3.658	0.2140(8.426)	0650/459	0.6652(26.19)
W	17 x 17/264	4.097/3.658	0.2140(8.426)	665/461	0.6205(24.43)

Advanced Nuclear Fuels (ANF manufactures all fuel types and their designs closely match the vendors listed above.)

(1) This information is provided for general reference only. Fuels represent the maximum physical size and/or weight for each design.

Table 3.1-4

Deleted

Table 3.1-5

Deleted

Table 3.1-6

Deleted

Table 3.1-7
NUHOMS® Transfer Equipment Criteria

Component	Requirement	Criteria
Cask Interface		
	Orientation	Vertical to Horizontal
	Contact Dose	ALARA
	Support Points	Upper Lifting Trunnions and Lower Support Trunnions
Cask Support Skid	Weight Capacity	Cask + DSC
	Cask Positioning	Horizontal Translation and Rotation About Vertical Axis
	Cask Orientation	Allows Vertical to Horizontal Rotation
	Support Points	Upper and Lower Trunnion Pillow Blocks
Transport Trailer	Payload Capacity	Skid + Cask + DSC
	Cask Positioning	Vertical Translation at Each Corner
	Rigidity	Cask is Solidly Supported During DSC Transfer Operation
Hydraulic Ram	Capacity	355,900 N (80,000 lbf) Push and Pull
	Load Limit	Maximum Force is Limitable
	Base Mounting	Immobile During DSC Transfer

Table 3.1-8a
PWR Fuel Qualification Table for the Standardized NUHOMS®-24P and -24PT2 DSC (Fuel Without BPRAs)

(Minimum required years of cooling time after reactor core discharge)

Burnup (GWd/MTU)	Initial Enrichment (wt. % U-235)																				
	2.0	2.1	2.2	2.3	2.4	2.5	2.6	2.7	2.8	2.9	3.0	3.1	3.2	3.3	3.4	3.5	3.6	3.7	3.8	3.9	4.0
10																					
15	5	5																			
20	5	5	5	5	5																
25		5	5	5	5	5	5	5	5												
28				5	5	5	5	5	5	5	5	5									
30						5	5	5	5	5	5	5	5								
32							5	5	5	5	5	5	5	5	5						
34								6	5	5	5	5	5	5	5	5	5				
36									6	6	6	6	5	5	5	5	5	5	5		
38											7	6	6	6	6	6	6	6	5	5	5
40												8	8	8	7	6	6	6	6	6	6
41												9	9	9	8	8	8	8	8	8	8
42													10	9	9	9	9	9	9	8	8
43													10	10	10	10	10	9	9	9	9
44														11	11	11	11	10	10	10	10
45														12	12	11	11	11	11	11	11

Not Acceptable per Figure 3.3-3

Not Acceptable or Not Analyzed

Notes:

- Use burnup and enrichment to lookup minimum cooling time in years. Licensee is responsible for ensuring that uncertainties in fuel enrichment and burnup are correctly accounted for during fuel qualification.
- Round burnup UP to next higher entry, round enrichments DOWN to next lower entry.
- Fuel with an initial enrichment less than 2.0 wt. % U-235 must be qualified for storage using the alternate nuclear parameters specified in Table 3.1-1. Fuel with an initial enrichment greater than 4.0 wt. % U-235 is unacceptable for storage.
- Fuel with a burnup greater than 45 GWd/MTU is unacceptable for storage. Fuel with a burnup less than 15 GWd/MTU must be qualified for storage using the alternate nuclear parameters specified in Table 3.1-1.
- Example: An assembly with an initial enrichment of 3.65 wt. % U-235 and a burnup of 42.5 GWd/MTU is acceptable for storage after a ten-year cooling time as defined at the intersection of 3.6 wt. % U-235 (rounding down) and 43 GWd/MTU (rounding up) on the qualification table.

Table 3.1-8b
BWR Fuel Qualification Table for the Standardized NUHOMS®-52B DSC

(Minimum required years of cooling time after reactor core discharge)

Burnup (GWd/ MTU)	Initial Enrichment (wt. % U-235)																				
	2.0	2.1	2.2	2.3	2.4	2.5	2.6	2.7	2.8	2.9	3.0	3.1	3.2	3.3	3.4	3.5	3.6	3.7	3.8	3.9	4.0
15	3	3	3	3	3	3	3	3	3	3	3	3	3	3	3	3	3	3	3	3	3
20	5	5	5	5	5	5	5	5	5	5	5	5	5	5	5	5	5	5	5	5	5
25	5	5	5	5	5	5	5	5	5	5	5	5	5	5	5	5	5	5	5	5	5
30				5	5	5	5	5	5	5	5	5	5	5	5	5	5	5	5	5	5
32					6	6	6	5	5	5	5	5	5	5	5	5	5	5	5	5	5
34						8	8	8	8	8	8	8	8	7	6	6	6	6	6	6	6
35							10	10	10	10	9	8	8	8	8	8	8	8	6	6	6
36							11	11	11	11	11	10	10	10	10	10	10	9	8	8	8
37								13	13	12	12	12	12	11	11	11	11	11	10	10	10
38								15	14	14	14	13	13	13	13	12	12	12	12	12	11
39								18	17	17	16	16	16	15	14	14	14	14	13	13	13
40									21	21	20	20	19	18	17	17	16	16	16	16	15
42										22	22	22	21	21	20	20	20	19	118	17	17
44										24	24	23	23	23	22	22	21	21	21	20	20
45											25	24	24	23	23	23	22	22	22	21	21

Not Acceptable or Not Analyzed

Notes:

- Use burnup and enrichment to lookup required cooling time in years. Licensee is responsible for ensuring that uncertainties in fuel enrichment and burnup are correctly accounted for during fuel qualification.
- Round burnup UP to next higher entry, round enrichments DOWN to next lower entry.

Fuel with an initial enrichment less than 2.0 wt. % U-235 must be qualified for storage using the alternate nuclear parameters specified in Table 3.1-2. Fuel with an initial enrichment greater than 4.0 wt. % U-235 is unacceptable for storage.

- Fuel with a burnup greater than 45 GWd/MTU is unacceptable for storage. Fuel with a burnup less than 15 GWd/MTU is acceptable after three years cooling time provided the physical parameters from Table 3.1-2 have been met.
- Example: An assembly with an initial enrichment of 3.05 wt. % U-235 and a burnup of 34.5 GWd/MTU is acceptable for storage after a nine-year cooling time as defined at the intersection of 3.0 wt. % U-235 (rounding down) and 35 GWd/MTU (rounding up) on the qualification table.

Table 3.1-8c
PWR Fuel Qualification Table for the Standardized NUHOMS®-24P and -24PT2 DSC (Fuel With BPRAs)

(Minimum required years of cooling time after reactor core discharge)

Burnup (GWd/MTU)	Initial Enrichment (wt. % U-235)																				
	2.0	2.1	2.2	2.3	2.4	2.5	2.6	2.7	2.8	2.9	3.0	3.1	3.2	3.3	3.4	3.5	3.6	3.7	3.8	3.9	4.0
10																					
15	5	5																			
20	5	5	5	5	5																
25		5	5	5	5	5	5	5	5												
28				5	5	5	5	5	5	5	5	5									
30						6	6	6	5	5	5	5	5								
32							6	6	6	6	6	6	5	5	5						
34								7	6	6	6	6	6	6	6	6	6				
36									8	7	7	7	6	6	6	6	6	6	6		
38											8	8	7	7	7	7	6	6	6	6	6
40												9	9	8	8	8	7	7	7	7	6
41												10	9	9	9	9	8	8	8	8	8
42													10	10	9	9	9	9	9	9	9
43													11	11	11	10	10	10	10	9	9
44														12	11	11	11	11	10	10	10
45														13	12	12	12	11	11	11	11

Not Acceptable per Figure 3.3-3

Not Acceptable or Not Analyzed

Notes:

- BPRA Burnup shall not exceed that of a BPRA irradiated in fuel assemblies with a total burnup of 36,000 MWd/MTU.
- Minimum cooling time for a BPRA is 5 years for B&W designs and 10 years for Westinghouse designs, regardless of the required assembly cooling time.
- Use burnup and enrichment to lookup minimum fuel assembly cooling time in years. Licensee is responsible for ensuring that uncertainties in fuel enrichment and burnup are correctly accounted for during fuel qualification.
- Round burnup UP to next higher entry, round enrichments DOWN to next lower entry.
- Fuel with an initial enrichment less than 2.0 wt. % U-235 must be qualified for storage using the alternate nuclear parameters specified in Table 3.1-1. Fuel with an initial enrichment greater than 4.0 wt. % U-235 is unacceptable for storage.
- Fuel with a burnup greater than 45 GWd/MTU is unacceptable for storage. Fuel with a burnup less than 15 GWd/MTU must be qualified for storage using the alternate nuclear parameters specified in Table 3.1-1.
- Example: An assembly with an initial enrichment of 3.65 wt. % U-235 and a burnup of 42.5 GWd/MTU is acceptable for storage after a ten-year cooling time as defined at the intersection of 3.6 wt. % U-235 (rounding down) and 43 GWd/MTU (rounding up) on the qualification table.

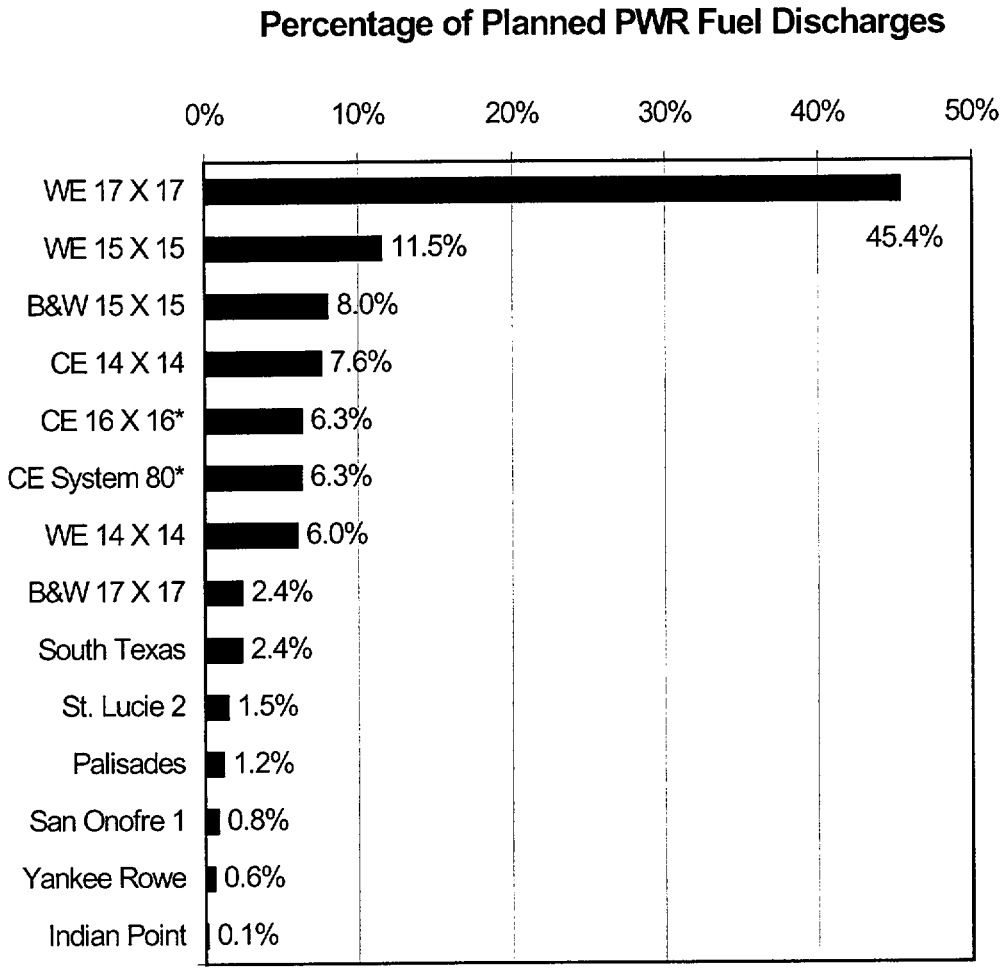

Source: U.S. DOE OCRWM Database (3.62) fuel planned to be discharged as of 2010.

* Known to exceed standardized NUHOMS® system design parameters-
not qualified for storage at this time.

Figure 3.1-1
PWR Spent Fuel Pool Inventory

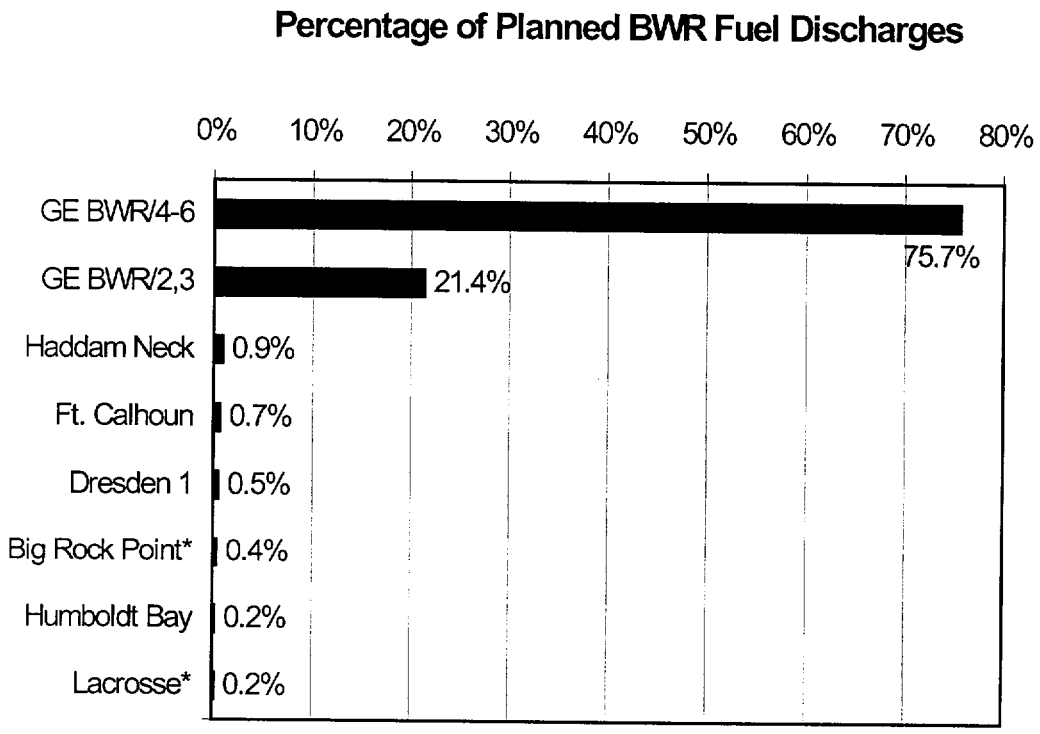

Source: U.S. DOE OCRWM Database (3.62) fuel planned to be discharged as of 2010.
* Known to exceed standardized NUHOMS® system design parameters-
not qualified for storage at this time.

Figure 3.1-2
BWR Spent Fuel Pool Inventory

Figure 3.1-3

Deleted

3.2 Structural and Mechanical Safety Criteria

The reinforced concrete HSM and its DSC support structure, the DSC and its internal basket assembly, and the transfer cask are the NUHOMS® system components which are important to safety. Consequently, they are designed and analyzed to perform their intended functions under the extreme environmental and natural phenomena specified in 10CFR72.122 (3.6) and ANSI-57.9 (3.36). Since the NUHOMS® ISFSI is an independent, passive system, no other components or systems contribute to its safe operation.

Table 3.2-1 summarizes the design criteria for the standardized NUHOMS® system components which are important to safety. This table also summarizes the applicable codes and standards utilized for design. The extreme environmental and natural phenomena design criteria discussed below comply with the requirements of 10CFR72.122 and ANSI-57.9. A description of the structural and mechanical safety criteria for the other design loadings listed in Table 3.2-1, such as thermal loads and cask drop loads, are provided in Chapter 8. The principal design criteria for the NUHOMS®-61BT system are provided in Appendix K.

3.2.1 Tornado and Wind Loadings

The NUHOMS® ISFSI is designed to be located anywhere within the contiguous United States. Consequently, the most severe tornado and wind loadings specified by NRC Regulatory Guide 1.76 (3.7) and NUREG-0800, Section 3.5.1.4 (3.8) are selected as the design basis. The NUHOMS® reinforced concrete HSMs are designed to safely withstand 10CFR72.122 (b)(2) tornado missiles. Extreme wind effects are much less severe than tornado wind and missile loads or seismic effects and, therefore, are not evaluated in detail for the HSM.

Since the NUHOMS® on-site transfer cask is used infrequently and for short durations, the possibility of a tornado funnel cloud enveloping the cask/DSC during transit to the HSM is a low probability event. Nevertheless, the transfer cask is designed for the effects of tornados, in accordance with 10CFR72.122. This includes design for the effects of worst case tornado winds and missiles.

3.2.1.1 Applicable Design Parameters

The design basis tornado (DBT) intensities used for the NUHOMS® transfer cask and HSM design are obtained from NRC Regulatory Guide 1.76. Region I intensities are utilized since they result in the most severe loading parameters. For this region, the maximum wind speed is 160 m/sec (360 miles per hour), the rotational speed is 130 m/sec (290 miles per hour), the maximum translational speed is 31 m/sec (70 miles per hour), the radius of the maximum rotational speed is 45.7 m (150 feet), the pressure drop

across the tornado is 20.7 kN/m^2 (3.0 psi), and the rate of pressure drop is 13.8 kN/m^2 (2.0 psi) per second. The maximum transit time based on the 2.2 m/sec (5 miles per hour) minimum translational speed specified for Region I is not used since an infinite transit time is conservatively assumed.

3.2.1.2 Determination of Forces on Structures

The effects of a DBT are evaluated for the NUHOMS® transfer cask and HSM. Tornado loads are generated for three separate loading phenomena: First, pressure or suction forces created by drag as air impinges and flows past the transfer cask or HSM; second, suction due to tornado generated pressure drop of 3 psi; and third, impact, forces created by tornado-generated missiles impinging on the HSM and TC. The atmospheric pressure change induced forces are considered. In the following paragraphs, the determination of these forces is described.

The determination of the DBT velocity pressure is based on the following equation as specified in ANSI A58.1-1982 (3.9).

$$q = 0.00256\, K_z (IV)^2 \qquad (3.2\text{-}1)$$

Table 5 of ANSI A58.1 (3.9) defines the Importance Factor (I) to be 1.07 and the velocity pressure exposure coefficient (K_z) to be 0.8 applied to the full HSM height of 4.6 m (15 feet). Since the generic design basis HSM dimensions are relatively small compared to the 45.7 m (150 ft) rotational radius of the DBT, the velocity value of combined rotational and translational wind velocity of 160 m/sec (360 miles per hour) is conservatively used in Equation 3.2-1 as follows:

$$q = 0.00256 \times 0.8 \times [1.07 \times 360]^2 = 304 \text{ psf} \qquad (3.2\text{-}2)$$

The calculated DBT velocity pressure is converted to a design wind pressure by multiplying this value by the appropriate pressure and gust response coefficients specified in Figure 2 and Table 8.4 of ANSI A58.1-1982. Note that with a gust response coefficient of 1.32 as used in Table 3.2-2, the wind pressure used in this analysis bounds that obtained using the basic wind pressure formula $q = 0.00256 \times V^2$. The magnitude and direction of the design pressures for various HSM surfaces and the corresponding pressure coefficients are tabulated in Table 3.2-2. The effects of overturning and sliding of the HSM under these design pressures are also evaluated and are reported with the stress analysis results in Section 8.2.

The transfer cask is also evaluated for a 19 kN/m^2 (397 psf) DBT velocity pressure since this load magnitude envelops that for a closed cylindrical structure such as the cask. The transfer cask stress analysis for tornado wind loads is contained in Section 8.2.

The determination of impact forces created by DBT generated missiles for the HSM is based on the criteria provided by NUREG-0800, Section 3.5.1.4, III.4 (3.8). Accordingly, three types of missiles are postulated:

- For the massive high kinetic energy deformable missile specified in NUREG-0800, a 1800 kg (3,967 pound) automobile with a 1.86 m^2 (20 square foot) frontal area impacting at normal incidence with a velocity of 195 fps is assumed.

- For the rigid penetration-resistant missile specified, a 125 kg (276 pound), 0.2m (eight inch) diameter blunt-nosed armor piercing artillery shell, impacting at normal incidence with a velocity of 185 fps is assumed.

- For the protective barrier impingement missile specified, a 25.4 mm (one inch) diameter solid steel sphere is assumed.

For the overall effects of a DBT missile impact, overturning, and sliding on the HSM, the force due to the deformable massive missile impact is applied to the structure at the most adverse location. Conservation of momentum is assumed to demonstrate that sliding and/or tipping of a single stand alone module will not result in an unacceptable condition for the module. The coefficient of restitution is assumed to be zero and the missile energy is transferred to the module to be dissipated as sliding friction, or an increase in potential energy due to raising the center of gravity. The force is evenly distributed over the impact area. The magnitude of the impact force for design of the local reinforcing is calculated in accordance with Bechtel Topical Report "Design of Structures for Missile Impact" (3.50).

For the local damage analysis of the HSM for DBT missiles, the rigid penetration-resistant missile is used for the evaluation of concrete penetration, spalling, scabbing and perforation thickness. The modified National Defense Research Committee (NDRC) empirical formula is used for this evaluation as recommended in NUREG-0800, Section 3.5.3 (3.25). The results of these evaluations are reported in Section 8.2.

The evaluation of tornado-generated missile loads on the transfer cask is addressed in Appendix C.5.

3.2.1.3 Ability of Structures to Perform

The HSM protects the DSC from adverse environmental effects and is the principal NUHOMS® structure exposed to tornado wind and missile loads. Furthermore, all components of the HSM (regardless of their safety classification) are designed to withstand tornadoes and tornado-based missiles. The transfer cask protects the DSC during transit to the ISFSI from adverse environmental effects such as tornado winds. The analyses of the HSM and transfer cask for tornado effects is contained in Sections 8.2.1 and 8.2.2.

Since the HSMs are located outdoors in generally open areas, there is no possibility of an adjacent building collapsing on an HSM. The possibility of blocking the ventilation air openings by a foreign object during a tornado event, however, is considered. The effects of ventilation opening blockage are presented in Section 8.2.7.

3.2.2 Water Level (Flood) Design

Flooding of the NUHOMS® ISFSI greater than 0.46 m (1'-6") above grade results in blockage of the HSM inlet vents. Flooding of the NUHOMS® ISFSI greater than 1.7 m (5'-8") above grade results in wetting of the DSC. Greater flood heights result in submersion of the DSC and blockage of the HSM outlet vents.

The DSC and HSM are conservatively designed for an enveloping design basis flood, postulated to result from natural phenomena such as a tsunami, and seiches, as specified by 10CFR72.122(b). For the purpose of this bounding generic evaluation, a 15 m (50 foot) flood height and water velocity of 4.6 m/sec (15 fps) is used. The HSM is evaluated for the effects of a water current of 4.6 m/sec (15 fps) impinging upon the side of a submerged HSM. The DSC is subjected to an external pressure equivalent to a 15 m (50 foot) head of water. These evaluations are presented in Section 8.2.4. The effects of water reflection on DSC criticality safety are addressed in Section 3.3.4. Due to its short term infrequent use, the on-site transfer cask is not explicitly evaluated for flood effects. ISFSI procedures should ensure that the transfer cask is not used for DSC transfer during flood conditions.

The calculated effects of the enveloping design basis flood are included in the load combinations and reported stresses presented in Section 8.2.10. The plant specific design basis flood (if the possibility for flooding exists at a particular ISFSI site) should be evaluated by the licensee and shown to be enveloped by the flooding conditions used for this generic evaluation of the NUHOMS® DSC and HSM.

3.2.3 Seismic Design Criteria

The design basis response spectra of NRC Regulatory Guide (R.G.) 1.60 (3.11) is selected for the NUHOMS® design earthquake as defined in 10CFR72.102 (a)(2). Since the DSC can be considered to act as a large diameter pipe for the purpose of evaluating seismic effects, the "Equipment and Large Diameter Piping System" category in NRC Regulatory Guide 1.61, Table 1 (3.12) is assumed to be applicable. Hence, a damping value of three percent of critical damping for the design bases safe shutdown earthquake is used. Similarly, from the same R.G. table, a damping value of seven percent of critical damping is used for the reinforced concrete HSM. The horizontal and vertical components of the design response spectra (in Figures 1 and 2, respectively, of the NRC Regulatory Guide 1.60) correspond to a maximum horizontal and vertical ground acceleration of 1.0g. The maximum ground displacement is taken to be proportional to

the maximum ground acceleration, and is set at 36 inches for a ground acceleration of 1.0g.

NRC Regulatory Guide 1.60 also states that for sites with different acceleration values specified for the design basis earthquake, the response spectra used for design should be linearly scaled from R.G. Figures 1 and 2 in proportion to the maximum specified horizontal ground acceleration. The maximum horizontal ground acceleration component selected for design of the NUHOMS® ISFSI is 0.25g. The maximum vertical acceleration component selected is two-thirds of the horizontal component which is 0.17g. These ground acceleration values comply with the requirements of 10CFR72.102 (a)(2) for sites underlaid by rock east of the Rocky Mountain front, except in the areas of known seismic activity. For ISFSI sites west of the Rocky Mountain front and areas of known potential seismic activity, seismicity should be evaluated by the licensee using the techniques outlined in 10CFR100 Appendix A (3.63).

In order to establish the amplification factor associated with the generic design basis response spectra, various frequency analyses are performed for the NUHOMS® system components. The results of these analyses indicate that the dominant lateral frequency for the reinforced concrete HSM exceeds 33 Hertz. The corresponding horizontal seismic acceleration used for design of the HSM is 0.25g. The dominant frequency of the DSC and the support structure is calculated to be 19.1 Hertz. The dominant HSM and support structure vertical frequency exceeds 33 Hertz which produces a vertical seismic design acceleration of 0.17g. The resulting seismic design accelerations used for the DSC are 0.40g horizontally and 0.17g vertically. The seismic analyses of the HSM and DSC are discussed further in Section 8.2.3.

3.2.4 Snow and Ice Loads

Snow and ice loads for the HSM are conservatively derived from ANSI A58.1-1982. The maximum 100 year roof snow load, specified for most areas of the continental United States for an unheated structure, of 5.27 kN/m^2 (110 psf) is assumed. For the purpose of this conservative generic evaluation, a total live load of 9.58 kN/m^2 (200 pounds per square foot) is used in the HSM analysis to envelope all postulated live loadings, including snow and ice. Snow and ice loads for the on-site transfer cask with a loaded DSC are negligible due to the smooth curved surface of the cask, the heat rejection of the SFAs, and the infrequent short term use of the cask.

3.2.5 Load Combination and Structural Design Criteria

3.2.5.1 Horizontal Storage Module

The NUHOMS® reinforced concrete HSM is designed to meet the requirements of ACI 349-85 (3.13). The ultimate strength method of analysis is utilized with the appropriate strength reduction factors as described in Table 3.2-4. The load combinations specified

in Section 6.17.3.1 of ANSI 57.9-1984 are used for combining normal operating, off-normal, and accident loads for the HSM. All seven load combinations specified are considered and the governing combinations are selected for detailed design and analysis. The resulting HSM load combinations and the appropriate load factors are presented in Table 3.2-5. The effects of duty cycle on the HSM are considered and found to have negligible effect on the design. The corresponding structural design criteria for the DSC support structure are summarized in Table 3.2-8 and Table 3.2-10. The HSM load combination results with 24P and 52B DSCs are presented in Section 8.2.10. Appendices K and L provide the HSM load combination results for the NUHOMS®-61BT and -24PT2 DSCs, respectively.

3.2.5.2 Dry Shielded Canister

With the exceptions noted in Table 4.8-1 and Table 4.8-2, the DSC is designed by analysis to meet the stress intensity allowables of the ASME Boiler and Pressure Vessel Code (1983 Edition with Winter 1985 Addenda) (3.14) Section III, Division 1, Subsection NB for Class 1 components (for the DSC pressure boundary components), and Subsection NF for Class 1 plate and shell supports (for the internal basket assembly components). The DSC is conservatively designed by utilizing linear elastic or non-linear elastic-plastic analysis methods.

The load combinations considered for the DSC normal, off-normal and postulated accident loadings are shown in Table 3.2-6 for the 24P, 24PT2 and 52B DSCs and in Appendix K for the 61BT DSC. ASME Code Service Levels A and B allowables are conservatively used for normal and off-normal operating conditions. Service Levels C and D allowables are used for accident conditions such as a postulated cask drop accident. Normal operational stresses are combined with the appropriate off-normal and accident stresses. It is assumed that only one postulated accident condition occurs at any one time. The effects of fatigue on the DSC due to thermal and pressure cycling are addressed in Section 8.2-10.

The DSC pressure boundary components which include the DSC shell and cover plates are designed using the stress criteria of the ASME B&PV Code Subsection NB. The shell longitudinal and circumferential welds are full penetration welds fabricated and inspected in accordance with Subsection NB. The cover plates to shell welds are partial penetration welds, designed using a "joint efficiency" factor of 0.6 on the ASME Code Subsection NB criteria. Table 3.2-9a summarizes the stress design criteria for the pressure boundary components of the DSC. In addition to stress criteria, buckling of the DSC shell is evaluated using the ASME Code Subsection NB (for Service Levels A,B, C) and ASME Code Appendix F (for Service Level D) stability criteria.

The 24P DSC basket components include the spacer discs, support rods, guide sleeves oversleeves, and their associated welds. The 24PT2 and 52B DSC basket components include the spacer discs, support rod and spacer sleeve assemblies, neutron absorber plates (poison plates), poison plate support bars and connecting hardware. Table 3.2-9b

summarizes the stress criteria for DSC non-pressure boundary components (except for support rods). The spacer discs are designed using the component stress criteria from ASME Code Subsection NB (for Service Levels A, B, C) and ASME Code Appendix F (Service Level D, Elastic and Elastic/Plastic analysis). The support rods are designed using the criteria of ASME Code Subsection NF for linear type component supports (for Service levels A, B, C) and ASME Code Appendix F (for Service Level D stress or stability criteria). For Service Level A the limits of NF-3322 are used. For Service Levels B and C the factors of Table NF-3523(b)-1 are used. For Service Level D, the criteria from Appendix F is used. The 24P guide sleeves and oversleeves are designed using the stress criteria of ASME Code Subsection NB and ASME Code Appendix F, and the stability criteria of Subsection NF and Appendix F, as applicable. All non-pressure boundary partial penetration and fillet welds are designed using the stress criteria of ASME Code Subsection NF and ASME Code Appendix F.

Other components of the DSC include the support ring, the lifting lugs, the shield plugs, the grapple ring and grapple ring support plate, and all welds associated with these components. The support ring is designed using the ASME Code Subsection NB criteria. The associated weld to the DSC shell is a partial penetration weld evaluated to the ASME Code Subsection NF and Appendix F requirements, as applicable. The lifting lugs and associated welds are designed using Subsection NF allowables. The grapple ring, grapple ring support plates and associated welds are designed using the ASME Code Subsection NB design criteria. The shield plugs are non-pressure boundary components and need only to maintain their structural integrity. The shield plugs are evaluated using Subsection NB primary stress limits. The shield plugs stiffener welds in the long cavity basket are full penetration welds designed to Subsection NF.

3.2.5.3 On-site Transfer Cask

The on-site transfer cask is a non-pressure retaining component which conservatively is designed by analysis to meet the stress allowables of the ASME Code (3.14) Subsection NC for Class 2 components. The cask is conservatively designed by utilizing linear elastic analysis methods. The load combinations considered for the transfer cask normal, off-normal, and postulated accident loadings are shown in Table 3.2-7. Service Levels A and B allowables are used for all normal operating and off-normal loadings. Service Levels C and D allowables are used for load combinations which include postulated accident loadings. Allowable stress limits for the upper lifting trunnions and upper trunnion sleeves are conservatively developed to meet the requirements of ANSI N14.6-1993 (3.37) for a non-redundant lifting device for all cask movements within the fuel/reactor building. The maximum shear stress theory is used to calculate principal stresses in the cask structural shell. The appropriate dead load and thermal stresses are combined with the calculated drop accident scenario stresses to determine the worst case design stresses. The transfer cask structural design criteria are summarized in Table 3.2-11 and Table 3.2-12. The transfer cask accident analyses are presented in Section 8.2. The effects of fatigue on the transfer cask due to thermal cycling are addressed in Section 8.2.10. Appendices K and L address the effects of handling the NUHOMS®-61BT and -24PT2 DSC in the transfer cask, respectively.

Table 3.2-1
Summary of NUHOMS® Component Design Loadings

Component	Design Load Type	SAR Section Reference	Design Parameters	Applicable Codes
Horizontal Storage Module(1):	---	---	---	ACI 349-85, ACI 349R-85 (design); ACI 318-83 (construction only)
	Design Basis Wind Load	3.2.1	Max. wind pressure : 397 psf Max. speed: 360 mph	NRC Reg. Guide 1.76 and ANSI A58.1 1982
	Design basis tornado wind load + Missile load	3.2.1	Maximum wind speed of 360 mph, and a pressure drop of 3 psi + Missile types: Automobile, 4000lbs, 195fps 8" diameter shell, 276lbs, 185fps 1 in. diameter, solid steel sphere	NRC Reg. Guide 1.76 and ANSI A58.1, 1982. NUREG-0800, Section 3.5.1.4
	Flood	3.2.2	Maximum water height: 50 feet Maximum velocity: 15 ft./sec.	10CFR72.122(b)
	Seismic	3.2.3	Hor. ground acceleration: 0.25g (both directions) Vert. ground acceleration: 0.17g with Reg. Guide 1.60 spectra at 7% damping.	NRC Reg. Guides 1.60 & 1.61
	Snow and Ice	3.2.4	Maximum load: 110 psf (included in live load)	ANSI A58.1-1982
	Dead Load	8.1.1.5	Dead weight including loaded DSC (concrete density of 150 pcf)	ANSI 57.9-1984
	Normal and Off-Normal Operating Temperatures	8.1.1.5	DSC with spent fuel rejecting 24.0 kW of decay heat for 5 yr. cooling time. Ambient air temperature range of -40°F to 125°F for off-normal case	ANSI 57.9-1984

(1) See Appendix K for information associated with the NUHOMS®-61BT DSC.

Table 3.2-1
Summary of NUHOMS® Component Design Loadings
(continued)

Component	Design Load Type	SAR Section Reference	Design Parameters	Applicable Codes
	Accident Condition Temperatures	8.2.7.2	Same as off-normal conditions with HSM vents blocked for 40 hours	ANSI 57.9-1984
	Normal Handling Loads	8.1.1.1	For concrete component evaluation 80,000 lb.(DSC HSM insertion) 60,000 lb (DSC HSM extraction)	ANSI 57.9-1984
	Off-normal Handling Loads	8.1.1.4	For concrete component evaluation 80,000 lb (DSC HSM insertion) 80,000 lb (DSC HSM extraction)	ANSI 57.9-1984
	Live Load	8.1.1.5	Design load: 200 psf (includes snow and ice loads)	ANSI 57.9-1984
	Fire and Explosions	3.3.6	Enveloped by other design basis events	10CFR72.122(c)
Dry Shielded Canister(1):	---	---	---	ASME Code, Section III, Subsection NB, Class 1 Component
	Flood	3.2.2	Maximum water height: 50 ft.	10CFR72.122(b)
	Seismic	3.2.2	Horizontal ground acc.: 0.25g Vertical ground acc.: 0.17g	NRC Reg. Guides 1.60 & 1.61
	Dead Load	8.1.1.2	Weight of loaded 24P & 52B DSC: 80,000 lb. enveloping. Weight of loaded 24PT2 DSC: 85,000 lb. enveloping.	ANSI 57.9-1984
	Normal and Off-Normal Pressure	8.1.1.2	Enveloping internal pressure of ≤10.0 psig	10CFR72.122(h)
	Test Pressure	8.1.1.2	Enveloping internal pressure of 12 psig applied w/o DSC outer top cover plate	10CFR72.122(h)

(1) See Appendix K for information associated with the NUHOMS®-61BT DSC.

Table 3.2-1
Summary of NUHOMS® Component Design Loadings
(continued)

Component	Design Load Type	SAR Section Reference	Design Parameters	Applicable Codes
	Normal and Off-Normal Operating Temperature	8.1.1.2, 8.1.2.2	DSC with spent fuel rejecting 24.0 kW (PWR) or 19.2 kW (BWR) decay heat for 5 year cooling time. Ambient air temperature -40°F to 125°F	ANSI 57.9-1984
	Normal Handling Loads	8.1.1.2	1. Hydraulic ram load of 80,000 lb.(DSC HSM insertion) 60,000 lb (DSC HSM extraction) 2. Transfer (to/from ISFSI) Loads of: 2a. +/-1.0g axial 2b. +/-1.0g transverse 2c. +/-1.0g vertical 2d. +/-0.5g axial +/-0.5g transverse +/-0.5g vertical	ANSI 57.9-1984
	Off-Normal Handling Loads	8.1.2.1	Hydraulic ram load of: 80,000 lb. (DSC HSM insertion) 80,000 lb (DSC HSM extraction)	ANSI-57.9-1984
	Accidental Cask Drop Loads	8.2.5	Equivalent static deceleration of 75g for vertical end drop and horizontal side drops, and 25g oblique corner drop	10CFR72.122(b)
	Accident Internal Pressure	8.2.7 8.2.9	Enveloping internal pressure of ≤60 psig based on 100% fuel cladding rupture and fill gas release, 30% fission gas release, and ambient air temperature of 125°F	10CFR72.122(h)
Dry Shielded Canister Steel Support Structure(1):	---	---	---	AISC Specification for Structural Steel Buildings
	Dead Weight	8.1.1.4	Loaded DSC plus self weight	ANSI-57.9-1984
	Seismic	3.2.3	DSC reaction loads with horizontal ground acc. of 0.25g and vertical ground acc. of 0.17g	NRC Reg. Guides 1.60 & 1.61

(1) See Appendix K for information associated with the NUHOMS®-61BT DSC.

Table 3.2-1
Summary of NUHOMS® Component Design Loadings
(continued)

Component	Design Load Type	SAR Section Reference	Design Parameters	Applicable Codes
	Normal Handling Loads	8.1.1.4	Friction load of 29,580 lbs applied to both rails for support structure evaluation. This load is applied as a live load.	ANSI-57.9-1984
	Off-normal Handling Loads	8.1.2.1	For steel support structure evaluation, this load is 80,000 lbs plus a vertical load of 25,500 lbs applied to each rail, one rail at a time.	ANSI-57.9-1984
On-site[1] Transfer Cask:	---	---	---	ASME Code Section III, Subsection NC, Class 2 Component[2]
	Design Basis Tornado Wind	3.2.1	Max. wind pressure: 397 psf Max. wind speed: 360 mph	NRC Reg. Guide 1.76 and ANSI A58.1-1982
	Flood	3.2.2	Not included in design basis due to infrequent short duration use of cask	10CFR72.122(b)
	Seismic	3.2.3	Horizontal ground acc.: 0.25g Vertical ground acc.: 0.17g	NRC Reg. Guides 1.60 & 1.61
	Snow and Ice	3.2.4	External surface temp. and smooth circular section will preclude build-up of snow and ice loads when cask is in use	10CFR72.122(b)

(1) The transfer cask is not part of the cask storage system which for NUHOMS® consists of the canister and module.

(2) ASME Subsection NCA does not apply.

Table 3.2-1
Summary of NUHOMS® Component Design Loadings
(continued)

Component	Design Load Type	SAR Section Reference	Design Parameters	Applicable Codes
	Dead Weight	8.1.1.9	a. Vertical orientation, self weight with loaded DSC and water in cavity[2]	ANSI 57.9-1984
			b. Horizontal orientation self weight with loaded DSC on transfer skid[3]	ANSI 57.9-1984
	Normal and Off-normal Operating Temperatures	8.1.1.9, 8.1.2.2	Loaded DSC rejecting 24.0 kw decay heat with 5 yr. cooling time. Ambient air temperature range: -40°F to 125°F w/solar shield, -40°F to 100°F w/o solar shield.	ANSI 57.9-1984
	Normal Handling Loads	8.1.1.9	a. Upper lifting trunnions - in fuel/reactor building: Stresses ≤ yield with 6 x load and ≤ ultimate with 10 x load	ANSI N14.6-1993[1]
			b. Upper lifting trunnions - on-site transfer	ASME Section III
			c. Lower support trunnions: proportional weight of loaded cask during downending and transit to HSM	ASME Section III
			d. Hydraulic ram load of 80,000 lb. (DSC HSM insertion) and 60,000 lb (DSC HSM extraction)	ANSI 57.9-1984

(1) The trunnion design stress allowables are consistent with that of lifting devices governed by ANSI N14.6.

(2) The total analyzed dead weight loads for the standardized, OS197, and OS197H transfer casks are 200,000 lbs, 208,500 lbs and 250,000 lbs, respectively.

(3) The total analyzed cask payloads loads for the standardized, OS197, and OS197H casks are 80,000 lbs, 90,000 lbs, and 116,000 lbs, respectively.

Table 3.2-1
Summary of NUHOMS® Component Design Loadings
(continued)

Component	Design Load Type	SAR Section Reference	Design Parameters	Applicable Codes
	Off-normal Handling Loads	8.1.2.1	Hydraulic ram load of 80,000 lb.(DSC HSM insertion) 80,000 lb (DSC HSM extraction)	ANSI 57.9-1984
	Accidental Cask Drop Loads	8.2.5	Equivalent static deceleration of 75g for vertical end drops and horizontal side drops, and 25g for oblique corner drop	10CFR72.122(b)
	Fire and Explosions	3.3.6	Enveloped by other design basis events	10CFR72.122(c)
	Internal Pressure	---	N/A - DSC provides pressure boundary	10CFR72.122(h)

Table 3.2-2
Design Pressures for Tornado Wind Loading

Wall Orientation	Velocity Pressure (psf)	Max/Min Pressure Coefficient	Max/Min Design Pressure (psf)
North	304	+1.31	+397
East	304	-1.17	-357
South	304	-0.64	-196
West	304	-1.17	-357
Roof	304	-1.17	-357

Notes:

1. Wind direction assumed to be from North. Wind loads for other directions may be found by rotating table values to desired wind direction.
2. Gust factors G^h and G^z are conservatively assumed to be 1.32.
3. Wind loads are resisted by end and rear module shield walls (not shown below).

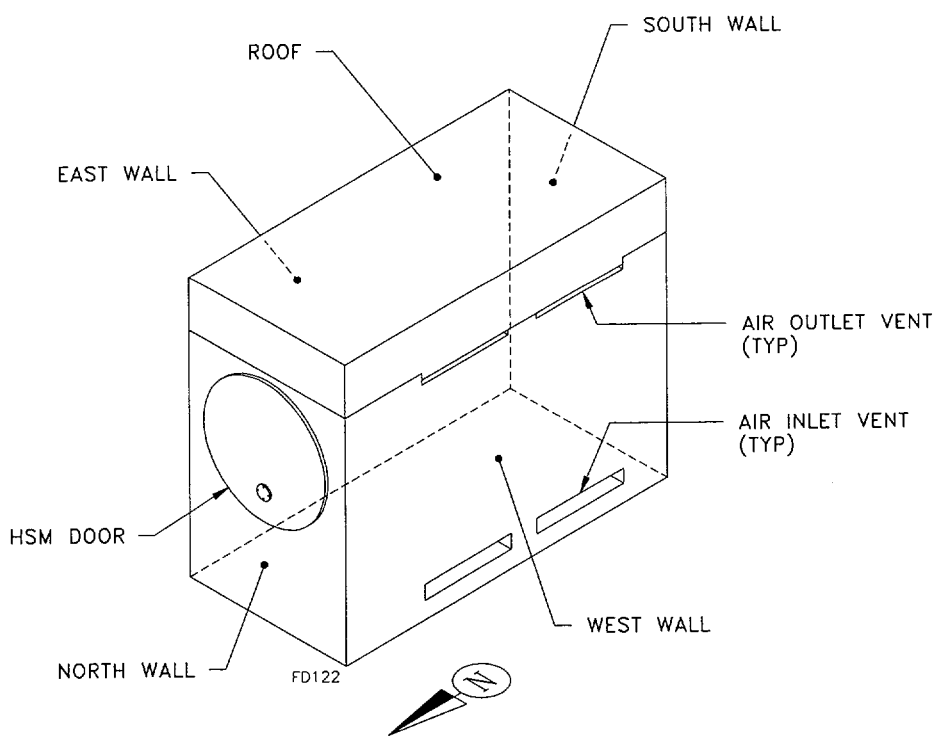

Table 3.2-3

Deleted

Table 3.2-4
HSM Ultimate Strength Reduction Factors

Type of Stress	Reduction Factor
Flexure	0.9
Axial Tension	0.9
Axial Compression	0.7
Shear	0.85
Torsion	0.85
Bearing	0.7

Table 3.2-5
HSM Load Combination Methodology

Case No.	Load Combination[1]	Loading Notation
1	1.4D + 1.7L	D = Dead Weight[3]
2	1.4D + 1.7L + 1.7H	E = Earthquake Load
3	0.75 (1.4D + 1.7L + 1.7H + 1.7T + 1.7W)	F = Flood Induced Loads
4	0.75 (1.4D + 1.7L + 1.7H + 1.7T)	H = Lateral Soil Pressure Load[2]
5	D + L + H + T + E	L = Live Load[4]
6	D + L + H + T + F	T = Normal Condition Thermal Load
7	D + L + H + T_a	T_a = Off-normal or Accident Condition Thermal Load
		W = Wind Load[5]

(1) The HSM load combinations are in accordance with ANSI-57.9. In Case 6 flood loads (F) are substituted for drop loads (A) which are not applicable to the HSM.

(2) ANSI 57.9 defines lateral soil pressure load case H which is not applicable to the HSM (H=0).

(3) Dead load (D) is increased +5% to simulate most adverse loading as required by ANSI 57.9

(4) Live loads (L) are varied between 0 and 100% of design load to simulate most adverse conditions for the HSM.

(5) Wind loads are conservatively taken the same as Design Basis Tornado (DBT) wind pressure loads. Missile loads are analyzed for local damage, overall damage, overturning and sliding effects.

Table 3.2-6
DSC Load Combinations and Service Levels[10]

Load Case		Normal Operating Conditions								Off-Normal Conditions				Accident Conditions								
		1	2	3	4	5	6	7	8	1	2	3	4	1	2	3	4	5	6	7	8	9
Dead Weight Load	Vertical/Horizontal DSC, Empty	X	X																			
	Vertical, DSC w/Fuel + Water			X										X								
	Vertical, DSC w/Fuel				X	X(5)							X		X(9)							
	Horizontal, DSC w/Fuel		X				X	X	X	X	X	X			X(9)	X	X	X	X	X	X	X
Thermal Load	Inside HSM: 0° to 100°F							X	X									X	X	X	X	X
	Inside Cask: 0° to 100°F (1)		X	X	X	X	X						X	X	X							
	Inside HSM: -40° to 125°F										X	X				X						
	Inside Cask -40° to 125°F								X													
	Inside HSM: Blocked Vents; 125°F																X					
External Pressure			X	X	X								X	X						X		
Internal Pressure Load	Hydrostatic Pressure		X(6)	X										X								
	Normal Pressure (4)					X	X	X	X									X				
	Off-Normal Pressure (4)									X	X	X	X(7)									
	Accident Pressure (3)														X	X	X		X		X	X
Test Pressure					X																	
Lifting/ Handling Loads	Lifting Loads	X																				
	Normal DSC Transfer						X		X													
	Off-Normal DSC Transfer									X		X										
	Accident DSC Transfer																				X	X
Cask Drop Load (end, side, or corner drop)															X							
Seismic Load														X(8)				X	X			
Flooding Load																				X		
ASME Code Service Level		A	A	A	A	A	A	A	A	B	B	B	B	C	D	C	D	C	C	C	C	D
Analysis Load Cases in Chapter 8, Table 8.2-24		NO-3 NO-4	FL-1 FL-2 FL-3	FL-4 FL-5 FL-6	DD-1 DD-2 DD-3 DD-4 DD-5	TL-1 TL-2 TL-3 TL-4	TR-1 to TR-8 LD-1 LD-2 LD-3	HSM-2	UL-1 UL-2 UL-3	LD-4 LD-5 LD-6 LD-7	HSM-1 HSM-3	UL-4 UL-5 UL-6	RF-1	FL-7	TR-9 TR-10 TR-11	HSM-4	HSM-5 HSM-6	HSM-7 HSM-8	HSM-8a	HSM-9 HSM-10	UL-7	UL-8

NOTES:

1. At temperatures over 100°F, a sunshade is required over the Transfer Cask. Temperatures for the 125°F with shade are enveloped by the 100°F without sun shade case.

2. The stress limits of ASME Code NB-3226 apply.

3. Accident pressure for Service Level C condition is applied to inner top and bottom cover plates. Accident pressures on the inner and outer top and bottom cover plates are evaluated for Service Level D allowables.

4. 10 psig is conservatively used for Normal and Off-normal pressure.

5. DSC inside cask is laydown to horizontal for load cases TL-3, TL-4.

6. Internal hydrostatic pressure. Applies to FL-3, FL-4.

7. Reflood pressure is 20 psig.

8. Fuel deck seismic loads are assumed enveloped by handling loads.

9. Both horizontal and vertical drop cases are considered.

10. See Appendix K for information associated with the NUHOMS®-61BT DSC.

Table 3.2-7
On-site Transfer Cask Load Combinations and Service Levels

Load Case		Normal Operating Conditions					Off-Normal Conditions		Accident Conditions				
		1	2	3	4	5	1	2	1	2	3	4	5
Dead Load/Live Load		X	X	X	X	X	X	X	X	X	X	X	X
Thermal w/DSC	0° to 100°F Ambient	X	X	X	X	X			X	X	X	X	X
	-40° to 125°F Ambient						X	X					
Handling Loads (Critical Lifts)	Vertical	X											
	Downending		X										
	Horizontal			X									
Handling Loads (Non-Critical)	Transport				X		X		X				
	DSC Transfer					X		X		X			
Seismic									X	X			
Drop	Vertical										X		
	Corner											X	
	Horizontal												X
ASME Code Service Level		A	A	A	A	A	B	B	C	C	D	D	D
Load Combination No.		A1	A2	A3	A4	A5	B1	B2	C1	C2	D1	D2	D3

Table 3.2-8
DSC Support Structure Load Combination Methodology

Allowable Stress (S)	
Case No.	Load Combination
1	S > D + L
2	S > D + L + H
3	1.33S > D + L + H + W
4	1.5S > D + L + H + T + W
5	1.6S > D + L + H + T + E
6	1.33S > D + L + H + T
7	1.7S > D + L + H + T_a

(1) Load combinations are per ANSI 57.9 except lateral soil pressure (H = 0) and drop loads (A = 0). For definitions of loads see Table 3.2-5.

(2) Dead load (D) includes weight of loaded DSC and is increased +5% to simulate most adverse loading.

(3) Live load is equal to normal DSC handling loads for Cases 1 through 5. L is varied 0 - 100% to obtain critical section. For Case 6, L is equal to off-normal jammed DSC loads. For Case 7, L = 0.

Table 3.2-9a
Stress Design Criteria for DSC Pressure Boundary Components[3], [4]

Item	Stress Type	Stress Values[1]			
		Service Levels A & B	Service Level C	Service Level D (Austenitic Components)	
				Elastic	Elastic/Plastic
DSC[2]	Primary Membrane	S_m	Greater of 1.2 S_m or S_y	Smaller of 2.4 S_m or 0.7 S_u	Greater of 0.7S_u or S_y+1/3(S_u-S_y)
	Primary Membrane + Bending	1.5 S_m	Greater of 1.8 S_m or 1.5 S_y	Smaller of 3.6 S_m or S_u	0.9 S_u
	Primary + Secondary	3.0 S_m	N/A	N/A	N/A
DSC Partial Penetration Welds	Primary	0.6 S_m	Greater of 0.72S_m or 0.6 S_y	Smaller of 1.44S_m or 0.42 S_u	Greater of 0.42S_u or 0.6(S_y+1/3(S_u-S_y))
	Primary + Secondary	0.6(3.0 S_m)	N/A	N/A	N/A

(1) Values of S_y, S_m, and S_u versus temperature are given in Table 8.1-3.

(2) Includes full penetration volumetrically inspected welds

(3) Pressure boundary components are DSC shell, inner and outer (top and bottom) cover plates and associated welds.

(4) See Appendix K for the NUHOMS®-61BT DSC.

Table 3.2-9b
Stress Design Criteria for DSC Non-Pressure Boundary Components (1), (5)

Item	Stress Type	Stress Values(2)					
		Service Levels A & B	Service Level C	Service Level D			
				(Ferritic Components)		(Austenitic Components)	
				Elastic	Elastic/ Plastic	Elastic	Elastic/ Plastic
DSC Non-pressure boundary components (3)	Primary Membrane	S_m	Greater of 1.2 S_m or S_y	0.7 S_u	0.7S_u	Smaller of 2.4 S_m or 0.7 S_u	Greater of 0.7S_u or S_y+1/3(S_u-S_y)
	Primary Membrane + Bending	1.5 S_m	Greater of 1.8 S_m or 1.5 S_y	1.0 S_u	0.9 S_u	Smaller of 3.6 S_m or S_u	Smaller than 0.9 S_u
	Primary + Secondary	3.0 S_m	N/A	N/A	N/A	N/A	N/A
DSC Non-Pressure Boundary Partial Penetration and Fillet Welds(4)	Weld Metal	Level A: 0.3 S_u Level B: 0.4 S_u	0.45S_u	0.60S_u	0.60S_u	0.6S_u	0.60S_u
	Base metal	Level A: 0.40 S_y Level B: 0.53 S_y	0.60S_y	0.80S_y	0.80S_y	0.8S_y	0.80S_y

(1) Applies to DSC Spacer Discs, Guide sleeves (24P), Oversleeves (24P), Shield Plugs, Support Ring, Poison Plates and Grapple Ring. Criteria do not apply to Support Rods and Lifting Lugs.

(2) Values of S_y, S_m, and S_u versus temperature are given in Table 8.1-3.

(3) Only primary stress limits apply to the Shield Plugs.

(4) Grapple ring welds are full penetration Subsection NB welds.

(5) See Appendix K for the NUHOMS®-61BT DSC.

Table 3.2-10
Structural Design Criteria for DSC Support Structure

Allowable Stress (S)	
Stress Type	Stress Value[1]
Tensile	0.60 S_y[2]
Compressive	(See Note 2)
Bending	0.60 S_y[3]
Shear	0.40 S_y[4]
Interaction	(See Note 5)

(1) Values of Sy versus temperature are given in Table 8.1-3.

(2) Equations E2-1 or E2-2 of the AISC Specification (3.45) are used as appropriate.

(3) For properly braced non-compact sections, for other cases see AISC Specification Chapter F.

(4) Maximum allowable shear stress for Cases 4, 5 and 7 (Table 3.2-8) is limited to 1.4S (0.56 Sy)

(5) Interaction equations per the AISC Specification are used as appropriate.

Table 3.2-11
Structural Design Criteria for On-Site Transfer Cask

Item	Stress Type	Stress Values[1]		
		Service Levels A & B	Service Level C	Service Level D
Transfer Cask Structural Shell	Primary Membrane	S_m	1.2 S_m	Smaller of 2.4 S_m or 0.7 S_u
	Primary Membrane + Bending	1.5 S_m	1.8 S_m	Smaller of 3.6 S_m or S_u
	Primary + Secondary	3.0 S_m	N/A	N/A
Trunnions (2)	Membrane and Membrane + Bending	Smaller of $S_y/6$ or $S_u/10$	N/A	N/A
	Shear	Smaller of $S_y/6$ or $S_u/10$	N/A	N/A
Fillet Welds	Primary	0.5 S_m	0.6 S_m	Smaller of 1.2 S_m or 0.35 S_u
	Secondary	0.75 S_m	N/A	N/A

(1) Values of S_y, S_m, and S_u versus temperature are given in Table 8.1-3.

(2) These allowables apply to the upper lifting trunnions for critical lifts governed by ANSI N14.6. The lower support trunnions and the upper lifting trunnions for all remaining loads are governed by the same ASME Code criteria applied to the cask structural shell.

Table 3.2-12
Structural Design Criteria for Bolts

Service Levels A, B, and C	
Average Service Stress	$< 2\ S_m$
Maximum Service Stress	$< 3\ S_m$
Service Level D	
Average Tension	Smaller of S_y or $0.7\ S_u$
Tension + Bending	S_u
Shear	Smaller of $0.6\ S_y$ or $0.42\ S_u$
Interaction	Interaction equation of Appendix F (F-1335.3) of ASME Code (3.14)

Figure 3.2-1

Deleted

3.3 Safety Protection System

3.3.1 General

The NUHOMS® system is designed for safe and secure, long-term containment and dry storage of SFAs. The components, structures, and equipment which are designed to assure that this safety objective is met are shown in Table 3.3-1. The key elements of the NUHOMS® system and its operation which require special design consideration are:

A. Minimizing the contamination of the DSC exterior by fuel pool water.

B. The double closure seal welds on the DSC shell to form a pressure retaining containment boundary and to maintain a helium atmosphere.

C. Minimizing personnel radiation exposure during DSC loading, closure, and transfer operations.

D. Design of the transfer cask and DSC for postulated accidents.

E. Design of the HSM passive ventilation system for effective decay heat removal to ensure the integrity of the fuel cladding.

F. Design of the DSC basket assembly to ensure subcriticality.

These items are addressed in the following subsections.

3.3.2 Protection by Multiple Confinement Barriers and Systems

3.3.2.1 Confinement Barriers and Systems

The radioactive material which the NUHOMS® ISFSI confines is the spent fuel assemblies and the associated contaminated materials. These radioactive materials are confined by the multiple barriers listed in Table 3.3-2.

During fuel loading operations, the radioactive material in the plant's fuel pool is prevented from contacting the DSC exterior by filling the cask/DSC annulus and DSC with uncontaminated, demineralized water prior to placing the cask and DSC in the fuel pool. This places uncontaminated water in the annulus between the DSC and cask interior. In addition, the cask/DSC annulus opening at the top of the cask is sealed using an inflatable seal to prevent pool water from entering the annulus. This procedure

minimizes the likelihood of contaminating the DSC exterior surface. The combination of the above operations assures that the DSC surface loose contamination levels are within those required for shipping cask externals (see Section 3.3.7.1). Compliance with these contamination limits is assured by taking surface swipes of the upper end of the DSC while resting in the cask in the decon area.

Once inside the DSC, the SFAs are confined by the DSC shell and by multiple barriers at each end of the DSC. As listed in Table 3.3-2, the fuel cladding is the first barrier for confinement of radioactive materials. The fuel cladding is protected by maintaining the cladding temperatures during storage below those levels which may cause degradation of the cladding. In addition, the SFAs are stored in an inert atmosphere to prevent degradation of the fuel, specifically cladding rupture due to oxidation and its resulting volumetric expansion of the fuel. Thus, a helium atmosphere for the DSC is incorporated in the design to protect the fuel cladding integrity by inhibiting the ingress of oxygen into the DSC cavity.

Helium is known to leak through valves, mechanical seals, and escape through very small passages because of its small atomic diameter and because it is an inert element and exists in a monatomic species. Negligible leakage rates can be achieved with careful design of vessel closures. Helium will not, to any practical extent, diffuse through stainless steel (3.33). For this reason the DSC has been designed as a redundant weld-sealed containment pressure vessel with no mechanical or electrical penetrations.

The DSC itself has a series of barriers to ensure the confinement of radioactive materials. The DSC cylindrical shell is fabricated from rolled ASME stainless steel plate which is joined with full penetration 100% radiographed welds. All top and bottom end closure welds are multiple-layer welds. This effectively eliminates a pinhole leak which might occur in a single layer weld, since the chance of pinholes being in alignment on successive weld layers is not credible. Furthermore, the DSC cover plates are sealed by separate, redundant closure welds. All the DSC pressure boundary welds are inspected according to the appropriate articles of the ASME Boiler and Pressure Vessel Code, Section III, Division 1, Subsection NB except as noted in the Table 4.8-1. This criteria insures that the weld filler metal is as sound as the parent metal of the pressure vessel. The NUHOMS®-61BT DSC is designed and tested to meet the leak tight criteria discussed in Appendix K.

Pressure monitoring instrumentation is not used since penetration of the pressure boundary would be required. The penetration itself would then become a potential leakage path and by its presence compromise the integrity of the DSC design. The DSC shell and welded cover plates provide total confinement of radioactive materials. Once the DSC is sealed, there are no credible events which could fail the DSC cylindrical shell or the double closure plates which form the DSC containment pressure boundary. This is discussed further in Chapter 8.

3.3.2.2 Ventilation - Offgas

The NUHOMS® system relies on natural convection through the air space in the HSM to cool the DSC. This passive convective ventilation system is driven by the pressure difference due to the stack effect (ΔP_s) provided by the height difference between the bottom of the DSC and the HSM air outlet, which is larger than the flow pressure drop (ΔP_f) at the design air inlet and outlet temperatures. The details of the ventilation system design are provided in Chapters 4 and 8.

There are no radioactive releases of effluents during normal and off-normal storage operations. Also, there are no credible accidents which cause significant releases of radioactive effluents from the DSC. Therefore, there are no off-gas or monitoring system requirements for the HSM. The only time an off-gas system is required is during DSC drying operations. During this operation, the spent fuel pool or plant's radwaste system is used to process the air and helium which is evacuated from the DSC.

3.3.3 Protection by Equipment and Instrumentation Selection

3.3.3.1 Equipment

The HSM, DSC, and on-site transfer cask are the equipment which is important to safety. Other equipment important to safety associated with the NUHOMS® system is the equipment required for handling operations within the plant's fuel/reactor building and are regulated by the plant's 10CFR50 operating license.

3.3.3.2 Instrumentation

The NUHOMS® system is a totally passive system. No safety-related instrumentation is necessary. The maximum temperatures and pressures are conservatively bounded by analyses (see Section 8.1.3). Therefore, there is no need for monitoring the internal cavity of the DSC for pressure or temperature during normal operations. The DSC is conservatively designed to perform its containment function during all worst case normal, off-normal, and postulated accident conditions. HSM thermal monitoring is required to meet the requirements of Chapter 10.

3.3.4 Nuclear Criticality Safety

The NUHOMS®-24P DSC is designed to meet 10CFR72.124 criticality safety limits during worst case wet loading/unloading operations without the use of fixed neutron absorbing materials (poisons) by two alternative means:

A. Utilizing credit for burnup (uranium depletion and non-volatile fission product buildup) and

B. Utilizing credit for the negative reactivity of soluble boron in the flooded DSC.

Since credit for burnup has not yet received generic approval by the NRC for dry storage applications, credit for soluble boron forms the design basis for the NUHOMS®-24P DSC until credit for burnup is generically accepted.

Several changes have been made to the generic NUHOMS®-24P design configuration analyzed in section 3.3.4.1. These changes include:

- The spacer disc material has been changed from SA-240, Type 304 stainless steel to SA-36 carbon steel. The thickness and location of the spacer discs have not changed.

- The support rod material has been changed from SA-479, Type 304 stainless steel or carbon steel to from SA-479, Type XM-19 stainless steel. The diameter of the support rods has been increased to 3.25 inches.

- The DSC guidesleeve configuration has been changed from twelve interior 12 gage sleeves and twelve 16 gage exterior sleeves to all 12 gage sleeves.

- The four stainless steel clips which connect each guidesleeve to the bottom spacer disc have been removed. To prevent removal of the guidesleeves from the basket if a fuel assembly is becomes stuck during insertion or removal, two stainless steel stops have been added to each guidesleeve between the second and third spacer discs from the top of the basket.

- The DSC guide sleeve length has been increased by 0.5 inch and 0.5 inch high flow channels have been provided at the bottom of guidesleeves on all four sides to allow drainage of any water inside the guidesleeve.

These changes in the 24P DSC basket configuration have been evaluated and the criticality analyses presented in section 3.3.4.1 remains bounding.

The NUHOMS®-52B DSC is designed to meet 10CFR72.124 criticality safety limits utilizing fixed neutron absorbing materials in the internal basket assembly until credit for burnup is generically accepted. The criticality safety analyses for the NUHOMS®-24P and NUHOMS®-52B DSCs are presented below.

3.3.4.1 NUHOMS®-24P DSC Criticality Safety

The NUHOMS®-24P DSC credit for burnup criticality analysis is presented in the paragraphs which follow. The NUHOMS®-24P DSC credit for soluble boron analysis is

documented by previous NRC question responses docketed under Project M-49. These question responses are included as Appendix F of this SAR for ease of reference.

3.3.4.1.1 Control Methods for Prevention of Criticality

A. General Methodology (NUHOMS®-24P)

The NUHOMS®-24P DSC basket is designed to ensure nuclear criticality safety during worst case wet loading operations. Rigorous measures are taken to exclude the possibility of flooding the DSC cavity during the transfer operations and storage period. Prior to these operations, the DSC is vacuum dried, backfilled with helium, double seal welded, and helium leak tested to assure weld integrity. Under these dry conditions there is no possibility of exceeding criticality safety limits. Since the transfer cask and HSM are designed to provide adequate drop and/or missile protection for the DSC, and the DSC basket is designed to maintain the fuel configuration after a drop accident, there is no credible accident scenario which would result in the possibility of water intrusion into the DSC; nor is there a credible accident scenario which would result in the canister being breached and flooded.

Control methods for the prevention of criticality for the NUHOMS®-24P DSC consist of the material properties of the fuel, administrative procedures (i.e., a plant-specific system using records or tests to document initial enrichment and burnup of the selected fuel assemblies), the geometrical arrangement of the basket and the inherent neutron absorption in the stainless steel guide sleeve assemblies.

Credit for burnup is taken by calculating an initial enrichment equivalent to the fissile inventory of the spent fuel. The CSAS2 criticality analysis sequence included in the SCALE-3 package of computer codes (3.44) is used to demonstrate subcriticality during moderation by pure water having a wide density range. Credit is taken for negative reactivity due to stable fission products.

The DSC basket is shown by analysis in Chapter 8 to maintain its configuration and location of the fuel assemblies after a drop accident. The DSC shell is shown to maintain its integrity during the accident so that no credible accident exists whereby the DSC may be accidentally flooded with fresh water. Water intrusion is not feasible since the DSC has been qualified to be helium leak tight for all postulated events which is a much more limiting condition. ISFSI flooding does result in canister immersion and a water reflector for the spent fuel matrix. However, as has been shown for the NUHOMS®-52B DSC in Section 3.3.4.2, this case does not limit the design. Since moderator intrusion during storage is prevented, subcriticality of the DSC is assured during storage at the ISFSI.

B. Design Parameters for Criticality Model (NUHOMS®-24P)

The geometry and fuel characteristics of the NUHOMS®-24P DSC criticality model are shown in Table 3.3-3. Figure 3.3-1 shows the actual geometry of the DSC and the geometry of the CSAS2 model. Figure 3.3-2 describes the modeling of the fuel assembly guide sleeves with the heterogeneous fuel assembly region inside.

The NUHOMS®-24P DSC internals design relies on administrative procedures to allow only fuel assemblies of less than a predetermined residual reactivity to be placed in the DSC for storage. The predetermined residual reactivity limit is selected to correspond roughly to a fuel assembly at 80 percent of what is typically considered full burnup. The concept of reactivity equivalency is used to develop a curve of constant reactivity through the enrichment/burnup space assuming the DSC was fully loaded with spent B&W 15x15 fuel assemblies. The resulting curve of reactivity equivalence for the DSC is presented in Figure 3.3-3. The reactivity equivalence curve extends from a zero burnup, initial enrichment equivalent point of 1.45 wt. % (weight percent) U-235 to a high enrichment endpoint corresponding to 4.00 wt. % U-235 initial enrichment irradiated for approximately 37,000 MWD/MTU. The reactivity equivalence curve presented in Figure 3.3-3 is used to determine the acceptability of storing specific fuel assemblies in the NUHOMS®-24P DSC.

The selection of a 15x15 fuel assembly for PWR criticality calculations has been shown by many analyses to be the most reactive under a variety of conditions when compared to other PWR fuel assemblies (i.e., 14x14, 16x16, and 17x17) (3.28, 3.29, 3.30, 3.31). Thus the B&W 15x15 fuel selected as the design basis for the NUHOMS®-24P canister forms a sufficient basis to permit storage of PWR fuel types which meet the requirements of Section 10.3.1.1.

3.3.4.1.2 Reactivity Equivalence and Criticality Analysis Methods

A. Computer Code Description (NUHOMS®-24P)

1. The CASMO-2 computer code developed by Studsvik Energiteknik AB and supported by the Electric Power Research Institute (3.38),

2. The Shielding Analysis Sequence No. 2 (SAS2) included in the SCALE-3 package of codes developed by Oak Ridge National Laboratories (3.44), and

3. The Criticality Safety Analysis Sequence No. 2 (CSAS2) included in the SCALE-3 package of codes.

The CASMO-2 computer code is a multigroup two-dimensional transport theory code for burnup calculations on PWR or BWR assemblies. CASMO-2 is an industry recognized code which has been accepted by the NRC (3.39). Its ability to predict isotopic generation and depletion as well as neutron multiplication is well established in benchmark calculations (3.48, 3.49) and through its successful application in numerous reactor physics and core reload design calculations.

B. Computer Code Application (NUHOMS®-24P)

CASMO-2 is used in the criticality/equivalence calculations in two ways:

1. Irradiated fuel actinide number density data is obtained from CASMO-2 calculations for input to the CSAS2 criticality code sequence, and

2. A set of CASMO-2 k_{inf} results for infinite arrays of B&W 15x15 irradiated and non-irradiated fuel assemblies are used as a benchmark standard to validate the SAS2/CASMO2/CSAS2 criticality/equivalence analysis method used in the subject criticality calculations.

The use of the two dimensional actinide inventories is considered acceptable since axial burnup variation effects on irradiated fuel reactivity are considered in separate sensitivity calculations, and a conservative bias and uncertainty is added to the nominal two dimensional analysis k_{eff} results.

The SAS2 sequence in SCALE-3 is used to generate sets of spent fuel fission product inventory data at various burnup levels for the initial enrichment points considered. Only nonvolatile fission products identified as major neutron absorbers in Reference 3.40 are included in spent fuel criticality/equivalencing calculations.

SAS2 is an industry recognized code which employs ORIGEN-S to perform fuel burnup, depletion and decay calculations. SAS2 has been extensively tested for use in spent fuel isotopic inventory and decay heat source term development work (3.2). SAS2 is used with the 27GROUPNDF4 cross-section data library included in SCALE-3 to generate the fission product data used in the criticality analyses.

CASMO-2 generated actinide number densities and SAS2/ORIGEN's generated fission product number densities are used as input to the CSAS2/KENO sequence to specify irradiated fuel compositions in the equivalence calculations. The more rigorous rod-to-rod CASMO-2 program is used to generate actinide number densities based on a comparison of isotopic benchmark results for both SAS2 and CASMO (3.2 and 3.48 respectively). The comparison indicated, as expected, that the rod-to-rod CASMO-2 method generates more accurate irradiated fuel actinide inventories. SAS2/ORIGEN's irradiated fuel fission product number densities are used for reasons of compatibility with the CSAS2/KENO criticality analysis sequence; CASMO-2 employs lumped fission product data to account for many fission products contributing negative reactivity to irradiated fuel.

CSAS2 and the 123GROUPGMTH master cross-section library included in SCALE-3 are used in calculating an effective neutron multiplication factor, k_{eff}, for each initial enrichment/burnup combination considered. The CSAS2 analysis sequence used two cross-section processing codes (NITAWL and BONAMI), and a three-dimensional Monte-Carlo code (KENO-IV) for calculating the k_{eff} values for fully loaded DSC fuel arrays. The actinide data generated by CASMO-2 and the fission product data generated by SAS2 are used as input to CSAS2 for specifying spent fuel compositions.

C. Burnup Equivalence Determination (NUHOMS®-24P)

Several sets of k_{eff} values are calculated corresponding to a nominal case NUHOMS®-24P DSC model fully loaded with spent fuel at a number of different burnup levels for several initial fuel enrichments over the 1.45 to 4.0 wt. % U-235 range. Appropriate burnup related uncertainties are added and the resulting k_{eff} data analyzed using least-squares methods to determine the burnup level necessary in each initial enrichment case to obtain an acceptable k_{eff} value, allowing for additional uncertainties. A curve of reactivity equivalence is then constructed through these initial enrichment/burnup points and extended to a zero burnup intercept point. Additional uncertainties related to mechanical tolerances, fuel assembly positioning, moderator density, and reflector effects are analyzed at the zero burnup intercept point of 1.45 wt. % U-235. The final k_{eff} value assigned to the DSC represents a maximum at a 95/95 tolerance level assuming a full loading of design basis fuel with an initial enrichment and burnup combination found anywhere along the curve of equal reactivity presented in Figure 3.3-3.

The zero burnup intercept point for the reactivity equivalence curve is established for the NUHOMS®-24P DSC design by performing a study of NUHOMS®-24P DSC basket

criticality versus enrichment and determining the maximum fresh fuel enrichment to meet the limit on k_{eff} of 0.95 with uncertainties. Once establishing 1.45 wt. % U-235 as the maximum fresh fuel enrichment that would meet the 0.95 limit with uncertainties, calculations are performed to determine what levels of burnup are necessary to obtain identical final k_{eff} results (with uncertainties) for a number of higher initial enrichments over the 1.45 to 4.0 wt. % U-235 range. The first step in establishing the equivalent reactivity burnup levels is the calculation of several sets of k_{eff} values corresponding to a nominal case DSC model fully loaded with irradiated fuel; five sets of nominal k_{eff} values are generated corresponding to five initial enrichment cases in the range of interest.

Four burnup levels are analyzed in each initial enrichment case. A summary of the initial enrichment/burnup level combination cases analyzed and the calculated nominal k_{eff} results is provided in Table 3.3-4. Appropriate uncertainties are calculated and applied to the nominal irradiated fuel k_{eff} results and the resulting worst-case k_{eff} data for each initial enrichment case are analyzed using least-squares methods. Equivalent reactivity burnup levels are established for each initial enrichment case when the calculated worst-case k_{eff} result for an irradiated fuel case corresponded exactly to the worst-case k_{eff} result for the 1.45 wt. % U-235 fresh fuel case. The equivalent burnup levels established for each of the initial enrichment cases analyzed are provided in Table 3.3-5. Once equivalent burnup levels are established, a curve of reactivity equivalence is fit through these points in the initial enrichment/burnup space. The final k_{eff} value assigned to the NUHOMS®-24P DSC represents a maximum at a 95/95 tolerance level assuming a full loading of design basis fuel with an initial enrichment and burnup combination found anywhere along the curve of equal reactivity presented in Figure 3.3-3.

3.3.4.1.3 Criticality Evaluation

This section presents the analyses which demonstrate the acceptability of storing qualified fuel in the NUHOMS®-24P DSC under normal fuel loading, handling, and storage conditions. A nominal case model is described and a neutron multiplication factor, k_{eff}, presented. Uncertainties are addressed and applied to the nominal calculated k_{eff} value. The final k_{eff} value produced represents a maximum with a 95 percent probability at a 95 percent confidence level as required by ANSI/ANS-57.2-1983 (3.46) to demonstrate criticality safety.)

A. Basic Assumptions (NUHOMS®-24P)

The following assumptions are used in the NUHOMS®-24P DSC criticality evaluation:

1. Credit is taken for fuel burnup as allowed by ANSI/ANS 8.17-1984 (3.47).

2. Credit is taken for the inherent neutron absorption capability of the stainless steel guide sleeve assemblies of the DSC basket as shown on the drawings in Appendix E.

3. No credit is taken for neutron absorption in burnable poisons, control rods, supplemental neutron poisons, or control component structural materials. When control components are stored, borated moderator is displaced by the component. Verification that this displacement reduces reactivity is provided in Appendix H.

4. All assemblies are assumed to be nonirradiated 1.45 wt. % U-235 enriched B&W 15x15 type or irradiated B&W 15x15 assemblies of equal or less reactivity when a fully loaded DSC is considered.

5. The DSC spent fuel storage array is modeled as finite in lateral extent and infinite in axial extent except in axial burnup variation sensitivity calculations which assumed water reflection at both axial ends of the fuel array.

6. Geometrical and material uncertainties due to mechanical tolerances are treated by either using worst-case configurations or by performing sensitivity calculations and obtaining appropriate uncertainty values. The uncertainties considered included:

   a. Stainless steel guide sleeve wall thickness

   b. Center-to-center spacing

   c. Cell ID

   d. Cell bowing

   e. Assembly positioning

   f. Metal reflector positioning

7. Each fuel assembly is treated as a heterogeneous system with the fuel pins, control rod guide tubes, and instrument guide tube modeled explicitly as illustrated by Figure 3.3-2.

8. The moderator is pure unborated water at a uniform density of 0.9982 g/cc. Uncertainties resulting from moderator density variation effects are considered by performing sensitivity calculations. A conservatively calculated bias is applied to assure that the final k_{eff} value assigned to the array is a maximum at any water density between 1.0E-4 and 1.0 g/cc.

9. A uniform axial burnup profile is assumed in CSAS2 irradiated fuel equivalence calculation cases. Consideration is given to variations in axial burnup as required by ANSI/ANS-8.17-1984; sensitivity calculations are performed and an appropriate bias is applied.

10. Irradiated fuel is assumed to be cooled 7.5 years following discharge from the reactor.

11. For irradiated fuel equivalence calculations, credit is taken for 34 major fission product absorbers identified as stable sources of negative reactivity in Reference 3.41. Quantitative estimates of negative reactivity credit taken for the major fission product absorbers at several representative initial enrichment points along Figure 3.3-3 reactivity equivalence curve are provided in Table 3.3-5.

Table 3.3-3 provides the nominal dimensions of the NUHOMS®-24P DSC and transfer cask geometry illustrated in Figure 3.3-1. Figure 3.3-1 also provides an illustration of the fuel array and reflectors modeled in CSAS2 for the nominal case.

B. Nominal Case (NUHOMS®-24P)

Referring to Figure 3.3-1, Figure 3.3-2, and Table 3.3-3, the following zones are explicitly modeled in the NUHOMS®-24P DSC nominal case CSAS2 analysis:

1. Nominal DSC basket geometry parameters

2. 0.369 inch OD fuel pellets (208 rods)

3. 0.430 inch OD Zircaloy fuel clad (208 rods)

4. Void gap between fuel and clad

5. 0.530 inch OD control rod guide tubes (16 tubes)

6. 0.493 inch OD instrument tube

The nominal case CSAS2 calculation in which 50,100 neutron histories are followed, results in a k_{eff} of 0.87170 with a 95 percent probability at a 95 percent confidence level uncertainty of ± 0.00488.

C. Criticality Analysis Variability (NUHOMS®-24P)

The bias and uncertainty methodology applied in the calculation of the NUHOMS®-24P DSC final k_{eff} result is based on CSAS2/123GROUPGMTH calculated results for the set of 40 critical experiments summarized in Table 3.3-6. All 40 critical experiments included in the method benchmark are similar to zero burnup/nominal case flooded DSC conditions (i.e., all are water moderated, low enrichment heterogeneous UO2 systems). A representative number of the benchmark experiments include stainless steel separating materials and are very similar to the zero burnup/nominal case flooded DSC conditions. The inclusion of benchmark systems which differ from flooded DSC conditions in some respects, such as separating materials, is justified by inspection of the Table 3.3-6 k_{eff} results which do not indicate any significant trends. The calculated k_{eff} results for the diverse group of experiments analyzed demonstrates the calculational accuracy of the method under a variety of conditions including conditions representative of the zero burnup/nominal case flooded DSC fuel storage array.

The UO_2 experiments summarized in Table 3.3-6 provide the basis for the method and library bias and variability used in the final k_{eff} calculation. Additional benchmark calculations are performed to demonstrate that the irradiated fuel criticality/equivalence method used is conservative when compared to the method bias basis UO_2 benchmark results. CSAS2/123GROUPGMTH benchmark results for systems containing PuO_2-UO_2 mixed oxide fuel pins are provided in the Table 3.3-7. Benchmark data representative of irradiated fuel assemblies is obtained from the results of CASMO-2 infinite lattice criticality calculations; the results of benchmark comparisons between CASMO-2 and CSAS2/CASMO2/SAS2 calculated k_{inf} values are provided in Table 3.3-8. Inspection of the benchmark results provided in Table 3.3-7 and Table 3.3-8 demonstrates that the criticality/equivalence method used in the subject calculations conservatively overpredicts k_{eff} for systems containing plutonium or irradiated fuel of the type proposed to be stored.

In addition to UO_2 experiments, the CSAS2/123GROUPGMTH method is validated against PuO_2 - UO_2 mixed oxide experiments (3.42) and k_{inf} results generated by CASMO-2E for irradiated B&W 15x15 fuel assembly arrays (3.43). The results of these additional validation runs indicate that the CSAS2/123GROUPGMTH method conservatively overpredicts k_{eff} for systems containing Pu and/or fission products.

D. Additional Biases and Uncertainties (NUHOMS®-24P)

The 95/95 uncertainty in the NUHOMS®-24P DSC nominal case analysis is 0.00488 Δk. A statistical bias of +0.00488 and a 95/95 uncertainty of 0.01161 Δk is associated with the CSAS2 method used. In addition to these uncertainties, there are other considerations which may effect the final k_{eff} value assigned to the array. These considerations are treated as either worst-case in the nominal run or sensitivity runs are performed to determine the Δk associated with a variable parameter (e.g., guide sleeve thickness).

Axial variation in burnup is taken into account in a series of calculations performed separate from the nominal irradiated fuel equivalence calculations. The nominal

irradiated fuel equivalence calculations uses two dimensional (i.e., infinite axial extent) KENO models with uniform axial burnup profiles. In the axial burnup variation sensitivity runs, three dimensional KENO models are used to establish worst-case reactivity effects of non-uniform axial burnup with consideration of the presence of oversleeves in the upper and lower ends of the NUHOMS®-24P DSC basket. The three dimensional KENO models, illustrated by Figure 3.3-4, contain three axial BU fuel zones over the active fuel length and assume water reflection at both ends of the fully loaded DSC fuel array. A worst-case axial variation effect on storage array reactivity is established by generating k_{eff} results for five separate three dimensional axial burnup variation models, which varied the axial zone model geometry and burnups. Table 3.3-9 describes the axial burnup variation cases considered. All of the Table 3.3-9 cases correspond to

4.0 wt. % U-235 initial enrichment fuel assemblies irradiated to a nominal "uniform burnup basis" of 40,000 MWD/MTU; this point in the enrichment burnup space is selected for the sensitivity analysis since the skewed axial burnup effects on reactivity should be maximized at the point near the top end of the reactivity equivalence curve (i.e., highest burnup requirement).

The combinations of axial zone geometries and burnups analyzed and described in Table 3.3-9 are developed based on a comprehensive review of axial burnup profiles generated by the EPRI-NODE computer program. A worst-case profile is selected based on this review which included fuel assembly burnups ranging from 10,000 to 50,000 MWD/MTU. The sensitivity cases described in Table 3.3-9 are based on the burnup profile considered to be worst-case as a result of this review; this burnup profile is shown in the Figure 3.3-5.

The axial variation sensitivity calculations, which included consideration of stainless steel oversleeves in the upper and lower ends of the NUHOMS®-24P DSC basket, resulted in the application of a relatively small positive reactivity bias to all the uniform burnup nominal irradiated equivalence cases analyzed. A bias proportional to equivalence point burnup is applied in each initial enrichment/burnup case analyzed.

E. Determination of Worst-Case Maximum k_{eff} (NUHOMS®-24P)

The worst-case maximum NUHOMS®-24P DSC array k_{eff} is determined by combining the nominal case results with the uncertainties and biases developed from the method benchmark calculations and the sensitivity studies performed for the DSC fuel storage array. The following are treated by applying a bias to the k_{eff} results calculated for the nominal case:

1. The nominal case, and all equivalence calculation cases, assumed the moderator is pure unborated water at a density of 0.9982 g/cc. Moderator density variation effects on reactivity are considered by performing 16 additional CSAS2 runs using the same zero burnup nominal case geometry model, with the pure water

density varied over the 0.0001 to 1.0 g/cc density range. The results of these sensitivity runs are provided in Table 3.3-10. A bias accounting for optimum moderator density effects on DSC storage array reactivity is calculated based on these results. The bias applied, 0.02052 $\Delta k \pm 0.00660$ (two sigma), is equal to the maximum positive reactivity increase over the nominal 0.9982 g/cc moderator density case k_{eff} value observed for any sensitivity case analyzed.

2. The DSC and transfer cask walls are modeled as cuboids at positions corresponding to their closest actual approach to peripheral storage cell fuel regions in the nominal case model. A bias accounting for the worst-case positioning of the metal reflectors is developed by performing sensitivity calculations where the reflector distance from the fuel array is varied over a range of values, including a

3. pure water reflector case. The bias applied, 0.00802 $\Delta k \pm 0.00508$ (two sigma), corresponds to the maximum positive reactivity effect observed for the sensitivity cases analyzed over the nominal reflector position case.

4. A bias accounting for non-uniform axial burnup in PWR fuel assemblies is applied to the calculated nominal k_{eff} values in spent fuel equivalence calculations. A bias proportional to equivalence point burnup is calculated and applied for each equivalent initial enrichment/burnup case analyzed in the development of the Figure 3.3-3 reactivity equivalence curve. The biases applied in each initial enrichment/burnup case analyzed are provided in Table 3.3-11.

F. Uncorrelated Uncertainties (NUHOMS®-24P)

The following are treated and applied as uncorrelated tolerance uncertainties in the calculation of the final NUHOMS®-24P DSC storage array k_{eff}.

1. DSC guide sleeve center-to-center spacing varies nominally as shown in Figure 3.3-1. An uncertainty is calculated and applied by performing a sensitivity calculation which reduced the guide sleeve center-to-center spacings by the maximum applicable mechanical tolerances. The sensitivity calculation indicates that reducing the center-to-center spacings by the maximum tolerances could add as much as 0.01758 Δk (two sigma) to the nominal case k_{eff} value.

2. Fuel assemblies are centered in the guide sleeves in the nominal case model. An uncertainty is calculated and applied by performing a sensitivity calculation which considered a worst-case positioning of fuel assemblies in the inside corners (toward the central DSC axis). The sensitivity calculation indicates that a worst-case positioning of fuel assemblies in the DSC guide sleeves could add as much as 0.02551 Δk (two sigma) to the nominal case k_{eff} value.

3. The 12 gauge and 16 gauge stainless steel from which DSC guide sleeves are fabricated have a tolerance of ± 0.009 inch and 0.006 inch, respectively. An uncertainty is calculated and applied by performing a sensitivity calculation which considered worst-case guide sleeve thicknesses. The sensitivity calculation indicates that worst-case guide sleeve thicknesses could add as much 0.01304 Δk (two sigma) to the nominal case k_{eff} value.

4. DSC guide sleeve axial straightness tolerances (i.e., cell bowing) could reduce the water gap thickness between stored fuel assemblies. An uncertainty is calculated and applied by performing a sensitivity calculation which assumed a 0.15 inch reduction in water gap thickness for fuel assemblies stored in the central DSC guide sleeve locations. The sensitivity calculation indicates that such a reduction in water gap thickness could add as much as 0.02157 Δk (two sigma) to the nominal case k_{eff} value.

5. The ability of the equivalencing method to conservatively calculate the reactivity of systems containing irradiated fuel is verified by comparing CASMO2/SAS2/CSAS2 calculated k_{inf} results for systems containing irradiated fuel to results for the same systems calculated by CASMO-2 in a stand-alone application (an irradiated fuel reactivity calculational method qualified by years of incore reactor physics applications). The lack of irradiated fuel critical experiment benchmark data with which to fully qualify the CASMO2/SAS2/ CSAS2 reactivity equivalencing method resulted in the application of an uncertainty, however. A conservative uncertainty equivalent to five percent of the total amount of reactivity change due to irradiation is calculated and applied for each initial enrichment/burnup case analyzed in the reactivity equivalence calculations. The uncertainties applied in each initial enrichment/burnup case analyzed are provided in Table 3.3-11.

G. Analysis Results (NUHOMS®-24P)

The main conclusion of the criticality analysis is that the calculated worst-case k_{eff} value for a fully loaded NUHOMS®-24P DSC flooded with pure unborated water of a uniform optimum density, including uncertainties, is 0.94782. Conclusions regarding specific aspects of the methods used or the analyses presented can be drawn from the quantitative results presented in the associated tables. The resulting final k_{eff} value represents a maximum with a 95 percent probability at a 95 percent confidence level.

The following equation is used to develop the final k_{eff} result for the DSC fuel storage array:

$$k_{eff} = \text{k-nominal} + \text{B-method} + \text{B-axial} + \text{B-mod} + \text{B-ref} +$$

$$[(\text{ks-nominal})^2 + (\text{ks-method})^2 + (\text{ks-axial})^2 + (\text{ks-mechanical})^2 +$$

$(ks\text{-}reflector)^2 + (ks\text{-}burnup)^2 + (ks\text{-}mod)^2]^{½}$

Where:

k-nominal	=	Nominal case k_{eff}
B-method	=	Method bias
B-axial	=	Bias accounting for non-uniform axial burnup in PWR fuel assemblies (irradiated fuel cases only)
B-mod	=	Bias accounting for worst-case moderator density conditions
B-ref	=	Bias accounting for worst-case metal reflector positioning
ks-nominal	=	95/95 uncertainty in the nominal case k_{eff} value
ks-method	=	95/95 uncertainty in the method bias
ks-axial	=	95/95 uncertainty in the non-uniform axial burnup bias
ks-mechanical	=	95/95 uncertainty resulting from material and construction tolerances and positioning uncertainties
ks-reflector	=	95/95 uncertainty in the bias accounting for worst case metal reflector model assumptions
ks-burnup	=	Uncertainty in the equivalencing method results
ks-mod	=	95/95 uncertainty in the moderator density effects bias

Substituting the appropriate values for the nominal, zero-burnup case:

$k_{eff} = 0.94782$

All values of burnup used to develop the Figure 3.3-3 equivalence curve are selected to maintain k_{eff} equal to or below 0.94782.

Components of the final k_{eff} result for all cases analyzed are provided in Table 3.3-11. Additional information on the NUHOMS®-24P DSC criticality analysis with burnup credit is contained in Appendix F.

3.3.4.1.4 Off-Normal Conditions (NUHOMS®-24P)

Postulated off-normal conditions do not result in a NUHOMS®-24P DSC storage array reactivity which exceeds the k_{eff} value calculated and presented in Section 3.3.4.1.3.

The off-normal conditions considered include misloading of one or more high enrichment nonirradiated fuel assemblies into the DSC, and optimum moderation.

A. Misloading a High Enrichment Assembly

Misloading one or more fuel assemblies which do not qualify as acceptable for storage in the NUHOMS®-24P DSC according to the burnup equivalence curve shown in Figure 3.3-3 do not result in a k_{eff} value greater than the 0.95 criterion. The double contingency principle of ANSI/ANS 8.17-1984 can be applied to take credit for dissolved boron which is normally present in the PWR spent fuel pool and DSC during wet loading operations. The approximate 0.34 Δk negative reactivity provided by 2,000 ppm of soluble boron would more than compensate for the additional reactivity added by the misloading of one or more unqualified, high enrichment fuel assemblies. In addition, a higher acceptance limit of $k_{eff} \leq 0.98$ for wet loading and off-loading is justified for this off-normal case in accordance with ANSI/ANS 57.2-1983 as discussed in Appendix F.

B. Optimum Moderation

Optimum moderation conditions are considered and a conservative bias is applied in the normal case analysis presented in Section 3.3.4.1.3. Therefore, the presence of a pure water moderator of optimum density does not result in a NUHOMS®-24P DSC storage array reactivity which exceeds the k_{eff} value calculated and presented in Section 3.3.4.1.3. Further, it is possible that moderator densities other than unity could occur if moderator boiling temperatures were to be reached; however, unirradiated high enriched fuel provides no decay heat for moderator heating. Thus, this is a non-mechanistic unrealistic condition. The condition can be conceived for optimal moderation for irradiated fuel with high decay heats; however, the reactivity of the fuel is significantly reduced compared with that of unirradiated fuel.

3.3.4.1.5 Safety Criteria Compliance (NUHOMS®-24P)

The calculated worst-case k_{eff} value for a fully loaded NUHOMS®-24P DSC flooded with pure unborated water of a uniform optimum density is 0.94782. This calculated maximum k_{eff} value includes consideration of geometrical, material, and burnup uncertainties and biases at a 95/95 tolerance level as required by ANSI/ANS 57.2-1983 to demonstrate criticality safety.

Additionally, off-normal conditions potentially resulting in reactivity increases over the normal conditions considered are addressed and found to be acceptable.

The analyses presented in this SAR section and Appendix F demonstrate that the ANSI/ANS 57.2-1983 criteria limiting k_{eff} to 0.95 is satisfied under all postulated conditions for the NUHOMS®-24P DSC.

3.3.4.2 NUHOMS®-52B DSC Criticality Safety

3.3.4.2.1 Control Methods for the Prevention of Criticality

A. General Methodology (NUHOMS®-52B)

The NUHOMS®-52B DSC is designed to provide criticality control through a combination of mechanical and neutronic isolation of fuel assemblies as described in the following paragraphs. A support structure composed of six axially oriented support rods and nine spacer disks provides positive location for the fuel assemblies under both normal and accident conditions. The basket assembly utilizes fixed neutron absorbers which effectively decouple fuel assemblies.

The neutron absorber is a borated stainless steel which can be supplied with boron additions up to 2% to provide thermal neutron absorption. This license application is for 0.75% minimum boron content absorber material. Although borated stainless steel would be an effective load bearing component in the basket assembly, the NUHOMS®-52B DSC basket assembly has been designed such that the neutron absorbers are in no way loaded by other DSC structural components or the spent fuel assemblies. The absorber sheets are fastened to and supported by the basket assembly spacer disks. As a result, the sheets are captured such that no welding or bending is performed on them during fabrication.

Borated stainless steel is chosen for the neutron absorbers due to its desirable neutron attenuation, homogeneity, corrosion resistance, strength, and toughness. Commercial experience with borated stainless material includes a wide range of applications such as the TN-REG and TN-BRP transport/storage casks, Indian Point fuel storage racks, and scram balls in British Magnox reactors.

The principal performance features of the NUHOMS®-52B DSC as they relate to criticality control are:

1. The canister is designed such that it would be subcritical if water were to leak into the containment system.

2. The canister will remain subcritical during all conditions of storage, including full immersion in a design basis flood.

3. The criticality analyses are performed with consideration for

    a. the most reactive credible configuration consistent with the chemical and physical form of the fuel,

    b. moderation by water to the most reactive credible extent,

    c. close reflection by water on all sides,

4. The canister will remain subcritical with close water reflection and optimum interspersed hydrogenous moderation.

B. Design Parameters for the Criticality Model (NUHOMS®-52B)

Figure 3.3-6 and Figure 3.3-7 show the general arrangement of the KENO models. All 52 fuel assemblies are included in the model as well as the DSC support rods, DSC shell, and the transfer cask.

The NUHOMS®-52B DSC basket configuration has been modified to replace the four SA-479, Type 304 stainless steel or carbon steel 3 inch diameter support rods with six support rod assemblies consisting of a series of sleeves with 3.25 inch outside diameter. The criticality analysis for this revised configuration is bounded by the analysis presented in this section using the model shown in Figure 3.3-6.

The layout of a typical fuel assembly cell is shown in Figure 3.3-8. It is composed of one or two neutron absorber sheets in the orientation shown in Figure 3.3-6, a Zircaloy-4 fuel channel, a fuel assembly unit, and moderator. The KENO models include a thin layer of non-borated stainless steel "skin" on each side of the sheet which is assumed to exist as a result of the manufacturing process. The thickness of this skin is assumed to be 0.007" for all thicknesses of absorber sheet.

The neutron absorber material properties assumed for the criticality analysis are:

Finished plate thickness:	0.1345" ± 0.012"[1]
Stainless "Skin" thickness	0.007" maximum, each side
Boron content	0.75 wt. % minimum
B-10 enrichment	none (natural boron)
Plate density	7.85 g/cc minimum

Assuming that the areal boron loading is the pertinent design feature, it is possible to convert these parameters into ones more suitable for procurement. The specification for borated stainless steel need only include the plate thickness and areal boron loading. The equivalent minimum boron areal density is calculated below for one square centimeter of absorber:

$$(0.1345-0.012-2 * 0.007 \text{ in})(2.54 \text{ cm/in}) * (7.85 \text{ g/cc})(0.0075 \text{ g boron/g steel})/(1 \text{ cm}^2)$$

$$= 0.016 \text{ g/cm}^2$$

$$= 16 \text{ mg boron per cm}^2$$

An equivalent neutron absorber specification for absorber plate material with or without the "skin" assumed in the analysis is therefore:

Material:	Borated Stainless Steel
Finished plate thickness:	0.1345" ± 0.012"[1]
Areal boron content:	16 mg boron per cm^2, <u>minimum</u>
B-10 enrichment:	None (natural boron)

The fuel assembly unit indicated on Figure 3.3-8 is illustrated in Figure 3.3-9 for the example of a 7x7 fuel design. All the KENO models are full pin-by-pin representations.

[1] Plate thicknesses up to 0.16" are acceptable

Fuel pellet, pellet gap, Zircaloy cladding, and inter-rod moderator regions are all individually represented.

3.3.4.3 Criticality Analysis Methods (NUHOMS®-52B)

The NUHOMS®-52B criticality calculations are performed using the microcomputer application KENO5A (3.52) and the Hansen-Roach 16-group (HR-16) cross section working library. This code is ported directly from the mainframe computer version of KENO-Va (3.53).

TN West has developed a computer program named PN-HET (PNFSI-Heterogeneous/Resonance Effects Calculator) to calculate σ_p given basic atom density, geometric, and cross section data. PN-HET produces four U-235 and U-238 atom densities and their corresponding H-R cross section library IDs based on the calculated σ_p for use in the KENO input deck.

An extensive verification and validation of KENO5A, the HR-16 working cross section library, and the resonance/heterogeneous effects calculation program PN-HET has been performed by TN West (3.54). It was concluded that KENO5A/HR-16/PN-HET slightly overpredicts k_{eff} and that no significant biases are present due to system parameters such as fuel enrichment, absorber characteristics, fuel/moderator volume ratios, etc. Further discussion of the calculational bias is presented below.

3.3.4.3.1 Criticality Evaluation

This section presents the analyses which demonstrate the acceptability of storing qualified fuel in the NUHOMS®-52B DSC under normal fuel loading, handling, and storage conditions. A nominal case model is described and a neutron multiplication factor, k_{eff}, presented. Uncertainties are addressed and applied to the nominal calculated k_{eff} value. The final k_{eff} value produced represents a maximum with a 95 percent probability at a 95 percent confidence level as required by ANSI/ANS-57.2-1983 (3.46) to demonstrate criticality safety.

A. Basic Assumptions (NUHOMS®-52B)

1. No credit is taken for neutron absorption in fission products.

2. No credit is taken for neutron absorption in burnable poison rods.

3. Natural uranium blankets and axial or radial enrichment zones are not modeled. It is assumed that the fuel assemblies are of uniform enrichment everywhere.

4. KENO models ignore the presence of DSC spacer disks. This modeling approach is conservative since spacer disks produce a localized region where the interassembly moderator is significantly reduced. It is assumed that this reduction would result in a locally undermoderated situation that would have a negative impact on k_{eff}. In parallel, steel has a higher absorption cross section than water and therefore more neutrons are lost to absorption in the real system than in the cask model. Bierman (3.55) concluded that thick steel walls are a better reflector than water alone, and that thin sheets tended to act as a poison. Although these conclusions are regarding full length reflecting walls, not a spacer disk geometry, it is reasonable to assume that the spacer disks, which form a lattice in and around the assemblies, would tend to poison the system.

5. The DSC support rods, due to their axial orientation and proximity to the fuel, are included in the KENO models.

6. Specular albedo conditions are specified at the axial ends of the KENO models thereby neglecting end leakage of neutrons. This technique yields a slightly conservative result due to the neglect of axial neutron leakage.

7. The layout of a typical fuel assembly cell is shown in Figure 3.3-8. It is composed of one or two neutron absorber sheets in the orientation shown in Figure 3.3-6, a Zircaloy-4 fuel channel, a fuel assembly unit, and moderator. The KENO models include a thin layer on non-borated stainless steel "skin" on each side of the sheet which is assumed to exist as a result of the manufacturing process. The thickness of this skin is assumed to be 0.007" for all thicknesses of absorber sheet.

8. The fuel assembly unit indicated on Figure 3.3-8 is illustrated in Figure 3.3-9 for the example of a 7x7 fuel design. All the KENO models are full pin-by-pin representations. Fuel pellet, pellet gap, Zircaloy cladding, and inter-rod moderator regions are all individually represented.

9. The DSC is modeled as finite in lateral extent and infinite in axial extent. Reflective boundary conditions are specified outside the cask.

10. Geometrical and material uncertainties due to mechanical tolerances are treated by either using worst-case configurations or by performing sensitivity calculations and obtaining appropriate uncertainty values. The uncertainties considered included:

    a) Fuel assembly design

b) Fuel assembly position

c) Storage cell location

d) Neutron absorber boron content

e) Neutron absorber sheet thickness

f) Neutron absorber sheet width

g) Moderator density

h) Fuel enrichment

11. The moderator is pure unborated water at a uniform density of 0.9982 g/cc. Uncertainties resulting from moderator density variation effects are considered by performing sensitivity calculations. A conservatively calculated bias is applied to assure that the final k_{eff} value assigned to the array is a maximum at any water density between 0.005 and 1.0 g/cc.

B. Nominal Case (NUHOMS®-52B)

The nominal KENO case represents 52 GE-2 7x7 fuel assemblies centered in the storage locations. The characteristics of the design basis fuel, the DSC and basket, and the transfer cask are summarized in Table 3.3-12, Table 3.3-13, and Table 3.3-14. Regional atom densities used in the KENO models are summarized in Table 3.3-15.

The nominal case KENO5A calculation result for 50,000 neutron histories is $k_{eff} = 0.87894 \pm 0.00318$ (1σ).

C. Criticality Analysis Variability (NUHOMS®-52B)

An extensive suite of benchmark problems was run for the TN West KENO5A verification (3.54). The cases included were 134 Pacific Northwest Laboratories (PNL) critical experiments, 14 Babcock and Wilcox critical experiments, and 2 PNL subcritical experiments (3.55-3.60). The benchmarks are representative of critical or subcritical arrays of commercial light water reactor fuels with the following characteristics:

1. Water moderation

2. Neutron absorbers:

a) no special neutron absorbers,

b) neutron absorption by fixed sheets,

c) neutron absorption by aqueous solutions.

3. Unirradiated light water reactor type fuel (no fission products or "burnup credit") near room temperature (vs. reactor operating temperature)

4. Close reflection:

a) no specific reflector,

b) steel,

c) lead.

Based on the largest statistical population available for analysis, 123 of the PNL critical benchmarks, the KENO5A/HR-16 group cross section calculational bias is -0.00859 ± 0.00458 (1 standard deviation). Since 2σ is greater than Δk, the calculational bias and uncertainty associated with the KENO5A/HR-16/PN-HET methodology is statistically attached to the computed system k_{eff}s. The benchmark results are summarized in Table 3.3-16 and Figure 3.3-11.

D. Additional Biases and Uncertainties (NUHOMS®-52B)

Due to the capability of KENO5A to literally model the DSC/cask geometry, there are no additional computational biases or uncertainties. Certain mechanical uncertainties are considered, though, and they are discussed in the following sections.

Detailed KENO calculations are performed to determine which BWR fuel design is most reactive in the NUHOMS®-52B system geometry. KENO models are constructed for each candidate fuel design, or a similar design assumed to be equivalent or more reactive, in the flooded DSC/cask configuration.

The fuel design parameters which are considered to have an impact on criticality are: array size, number of fueled rods, rod pitch, metric tons of heavy metal (MTIHM), fuel rod diameter, active fuel length, cladding thickness, and fuel pellet diameter. Of these parameters, those which impact the ratio of fuel to moderator are considered to have the greatest impact: array size, number of fueled rods, rod pitch, fuel rod diameter, and fuel pellet diameter.

All fuel designs analyzed are found to have equivalent reactivity in the NUHOMS®-52B configuration (all k_{eff}s were within two standard deviations). General Electric 7x7 fuel (designated GE-2 7x7, V2) (3.61) is selected for the design basis fuel for subsequent calculations. Additional uncertainty or bias due to fuel design is included in the KENO calculations as a bias should it be necessary.

The fuel designs in Table 3.3-17, and any reload fuel having identical design parameters important to criticality, are qualified for storage in the NUHOMS®-52B system.

E. Determination of Worst-Case Maximum k_{eff} (NUHOMS®-52B)

The worst-case maximum NUHOMS®-52B DSC array k_{eff} is determined by combining the nominal case results with the uncertainties and biases developed from the method benchmark calculations and the sensitivity studies performed for the DSC fuel storage array.

F. Uncorrelated Uncertainties (NUHOMS®-52B)

1. Fuel Assembly Position Uncertainty

The fuel assembly position studies indicate that the NUHOMS®-52B system is overmoderated with respect to the inter-assembly moderator. When assemblies are moved uniformly inward from their nominal positions, k_{eff} rises; when assemblies are moved uniformly outward, k_{eff} falls.

The total offset from the spacer disk hole centerline and the centroid of the fuel assembly and flow channel is calculated by assuming the thinnest allowable neutron absorber sheet concurrent with the worst-case tolerance stack.

The results of the parametric studies are summarized in Table 3.3-18 and Figure 3.3-12. The maximum offset is calculated to be 0.329". Δk_{POS}, the resulting change in k_{eff} due to fuel assembly position, is extrapolated from a third-order fit to the curve in Figure 3.3-12 as 0.02382. U_{POS}, the associated uncertainty in the KENO run and numerical fit used to derive Δk_{POS} is 0.00495. Combining these, the 95/95 uncertainty in k_{eff} due to fuel assembly position is 0.03372.

2. Storage Cell Location

A parametric study is performed to determine the effects of the mechanical tolerances on hole locations in the spacer disks. The neutron absorber plates and fuel assemblies are moved the maximum tolerance in x and y simultaneously. Fuel assemblies are assumed to be centered in the storage cells.

No statistically significant effect was noted for this manufacturing tolerance. Both cases examined had a slightly higher reactivity than the baseline case. The amount of uncertainty in k_{eff} due to storage cell location, Δk_{LOC}, is 0.00833. U_{LOC}, the KENO uncertainty is 0.00311. The total 95/95 uncertainty is 0.01455.

Since there is no causal relationship between mechanical tolerances in the storage cell locations and where fuel assemblies come to rest within the storage locations, the two uncertainties are combined as uncorrelated uncertainties.

3. Neutron Absorber Boron Content

The sensitivity of k_{eff} to neutron absorber boron content is studied in a series of six parametric cases. The results are shown in Table 3.3-19 and Figure 3.3-13. In each case, the weight percent of the borated steel is varied. As can be seen in Figure 3.3-13, a "knee" is evident in the curve between 0.5 and 1.0 weight percent. Above 1.5%, the curve flattens out indicating that the additional boron is less effective above that concentration.

Since the neutron absorber sheet boron concentration is specified as a minimum, the only uncertainty in k_{eff} which would arise from concentration uncertainties would have a negative effect on the system reactivity. For conservatism, the boron uncertainty is taken to be zero.

4. Neutron Absorber Sheet Thickness

Six parametric cases are run to determine the effects of neutron absorber sheet thickness on the system reactivity.

The sheets are specified as 0.134 inches thick[2]. In order to provide analytical margin for manufacturing nonconformances, the standard mill tolerance specified in the ASME Code (3.14) (±0.012") are used to establish a thickness uncertainty in k_{eff}. In this manner, sheets as thin as 0.1345 -0.012 = 0.1225" are acceptable from a criticality standpoint.

The results of the sheet thickness study are shown in Table 3.3-20 and Figure 3.3-14. Δk_{THK}, the uncertainty in k_{eff} due to neutron absorber sheet thickness, is calculated to be .00714. U_{THK}, the KENO uncertainty and uncertainty in the

(2) The KENO models were performed for true 10 gage sheet thickness, 0.1345". The drawings are limited to three places of precision, thus 0.134".

numerical fit used to derive Δk_{THK}, is 0.00639. The total 95/95 uncertainty in k_{eff} due to absorber sheet thickness is 0.01922.

5. Neutron Absorber Sheet Width

The specified neutron absorber sheet width is 6.30 ± 0.04 inches (indicated on Figure 3.3-15). In order to assess the importance of sheet width variations, both within specification and in the event of fabrication nonconformances, six parametric cases are run to determine the effects of the neutron absorber width on k_{eff}.

The results of the absorber sheet width study are presented in Table 3.3-21 and Figure 3.3-15. Two conclusions are apparent from the results.

First, within the specified width tolerance band, there is no statistically meaningful change in k_{eff}. In the final calculation of the system k_{eff}, there is therefore no uncertainty in k assigned to account for mechanical uncertainties in neutron absorber sheet width.

By examining other sheet widths beyond that range, there arises a second conclusion. There is a knee in the reactivity curve which becomes apparent at around 6.0 inches and becomes fully established as the sheet width narrows down to the fuel assembly width (the fuel channel is 5.454" O.D.). This can be attributed to the "view factor" between adjacent fuel assemblies. The strongest neutronic coupling occurs between neighboring assemblies across their faces. Additional decoupling of diagonal neighbor fuel assemblies (as in the 7.0 inch case) does little to decrease the system reactivity.

It can therefore be concluded that above 6.0" width (for <u>all</u> sheets), k_{eff} is not strongly dependent on the sheet width. Manufacturing nonconformances resulting in narrow regions on absorber sheets are acceptable without further analysis if the minimum width is no less than 6.0 inches. Narrow sheet regions must not, of course, interfere with the ability of the spacer disks to support the sheets. This permission is further substantiated by the discussion of missing absorber sheets below.

6. Moderator Density

Normal operation of the NUHOMS®-52B system includes draining, vacuum drying, and, possibly, reflooding of the DSC. During these operations, it is anticipated that moderator densities will be near 1.0 g/cc (full density water), or near 0 g/cc (steam).

It can be postulated, however, that the bulk moderator density could be anything between the two extremes considering the range of temperatures and pressures which could be postulated to exist in the DSC during unusual operational states (boiling, reflood spray, etc.).

In order to demonstrate system safety under all moderator conditions, a series of KENO runs is performed. The moderator density is varied between 1.0 g/cc to near zero. The system reactivity is noted be monotonically decreasing with moderator density as indicated in Table 3.3-22 and Figure 3.3-16.

The highest reactivity occurs at 1.0 g/cc density which could only occur if very cold (4°C) water are introduced to the DSC. Since there are no operating limitations on water temperature, the increase in reactivity, $\Delta k_{MOD} = 0.00728$, is included in the calculation of final k_{eff} as an uncorrelated uncertainty. U_{MOD}, the uncertainty in the KENO run is 0.00495. The resulting 95/95 uncertainty in k_{eff} due to moderator density is 0.01718.

G. Analysis Results (NUHOMS®-52B)

The calculated maximum k_{eff} for the standardized NUHOMS®-52B includes all biases and uncertainties applicable to the calculational methodology and the design. The following relationship is used to combine the biases and uncertainties to arrive at the 95/95 maximum k_{eff}.

$$k_S = k_{NOM} + B_{KENO} + B_F + \sqrt{U_{NOM}^2 + U_{KENO}^2 + U_{MECH}^2}$$

$$= 0.87894 + (-0.00859) + 0.00177 + \sqrt{0.00636^2 + 0.00916^2 + 0.04517^2} \quad (1)$$

$$= 0.919$$

where k_S = system 95/95 reactivity

k_{NOM} = KENO calculated k_{eff} for nominal conditions

B_F = Fuel design bias

B_{KENO} = KENO method bias

U_{NOM} = uncertainty in the KENO results (2σ)

U_{KENO} = uncertainty in the KENO bias (2σ)

U_{MECH} = mechanical uncertainty (2σ)

All the mechanical uncertainties are considered independent, hence they are calculated by adding in quadrature. The previous sections and Table 3.3-24 provide detailed discussion of each of the terms in U_{MECH}.

3.3.4.3.2 Off-Normal Conditions (NUHOMS®-52B)

A. Misloading of One or More Unirradiated Fuel Assemblies into the DSC

The NUHOMS®-52B criticality analysis does not include credit for burnup. All fuel is assumed to be unirradiated, therefore there is no impact on k_{eff} if such fuel is inadvertently loaded.

B. Optimum Moderation

The moderator density study reveals that intermediate moderator densities (as in boiling or reflood splashing) have a negative effect on reactivity. It is determined, however, that very cold water (with a slightly higher density than 20°C water) would result in a slightly higher k_{eff}. This effect is included in the baseline k_{eff} as part of the mechanical uncertainty.

C. Loss of an Absorber Panel

Loss of one or more absorber sheets is not proposed as a credible accident. It is included only to demonstrate the inherent criticality safety of the NUHOMS®-52B design. The analysis is performed by analyzing the system with first one, then four of the central neutron absorbing sheets absent from the model.

The results are summarized in Table 3.3-23. This design is capable of suffering the loss of an entire central absorber sheet (presumably the most important sheet) with a positive reactivity change of only 0.010 Δk. Table 3.3-23

Clearly, manufacturing defects in the specified width, thickness, or straightness of a single sheet would have negligible impact on the overall system reactivity. Removal of the innermost four absorber sheets, however, would result in an increase in k_{eff} of 0.050 Δk.

D. Flooded ISFSI Site

The flooded site case is modeled using KENO and is found to have a reactivity of approximately 0.34; thus it is not a limiting scenario.

3.3.4.3.3 Safety Criteria Compliance (NUHOMS®-52B)

The calculated worst-case k_{eff} value for a fully loaded NUHOMS®-52B DSC flooded with pure unborated water is 0.919. This calculated maximum k_{eff} includes consideration of all calculational, geometrical, and material uncertainties and biases at a 95/95 tolerance level as required by ANSI/ANS 57.2-1983 to demonstrate criticality safety.

Additionally, there are no credible off-normal conditions which could increase reactivity beyond the normal conditions considered above.

The analyses presented in this SAR section demonstrate that the ANSI/ANS 57.2-1983 criteria limiting k_{eff} to 0.95 is satisfied under all postulated conditions for the NUHOMS®-52B.

3.3.4.4 NUHOMS®-61BT DSC Criticality Safety

The NUHOMS®-61BT DSC criticality analyses are described in Appendix K.

3.3.4.5 NUHOMS®-24PT2 DSC Criticality Safety

The NUHOMS®-24PT2 DSC criticality analyses are described in Appendix L.

3.3.5 Radiological Protection

The NUHOMS® ISFSI is designed to maintain on-site and off-site doses ALARA during transfer operations and long-term storage conditions. ISFSI operating procedures, shielding design, and access controls provide the necessary radiological protection to assure radiological exposures to station personnel and the public are ALARA. Further details on on-site and off-site doses resulting from NUHOMS® ISFSI operations and the ISFSI ALARA evaluation are provided in Chapter 7. Appendices K and L provide the on-site and off-site doses resulting from the use of NUHOMS®-61BT and -24PT2 systems, respectively, at an ISFSI.

3.3.5.1 Access Control

The NUHOMS® ISFSI is located within the owner controlled area of the plant. A separate protected area consisting of a double fenced, double gated, lighted area is generally installed around the ISFSI. Access is controlled by locked gates, and guards are stationed when the gates are open. The licensee's Security Plan should describe the remote sensing devices which are employed to detect unauthorized access to the facility.

In addition to the controlled access, a method of providing a security tamper seal may be implemented after insertion of a loaded DSC. The form to use could be, but is not limited to, one of the following:

Tack welding an HSM access door

Fully welding an HSM access door

Tack welding 2 or more closure bolts on the HSM access door

Tamper seals

Existing HSM closure bolt torquing

The HSM access door weighs approximately three tons and requires heavy equipment for removal. This ensures that there is ample time to respond to an unauthorized entry into the ISFSI before access can be gained to any radiological material.

3.3.5.2 Shielding

For the NUHOMS® system, shielding is provided by the HSM, transfer cask, and shield plugs of the DSC. The NUHOMS® standardized HSM is designed to minimize the surface dose to limit occupational exposure and the dose at the ISFSI fence. Experience has confirmed that the dose rates for the HSM are extremely low. A shield wall may be removed for a period of time as part of facility installation or expansion. However, if applicable, compensatory measures shall be taken for radiation shielding. The NUHOMS® transfer cask and the DSC top shield plug are designed to limit the surface dose rates (gamma and neutron) ALARA. Temporary neutron shielding may be placed on the DSC shield plug and top cover plate during closure operations. Similarly, additional temporary shielding may be used to further reduce surface doses. Radiation zone maps of the HSM, cask, DSC surfaces and the area around these components are provided in Chapter 7 for the NUHOMS®-24P and NUHOMS®-52B systems. Appendices K and L provide the results with the NUHOMS®-61BT DSC and –24PT2 DSC, respectively.

3.3.5.3 Radiological Alarm Systems

There are no radiological alarms required for the NUHOMS® ISFSI.

3.3.6 Fire and Explosion Protection

The NUHOMS® HSM and DSC contain no flammable material and the concrete and steel used for their fabrication can withstand any credible fire hazard. There is no fixed fire suppression system within the boundaries of the ISFSI. The facility should be located such that the plant fire brigade can respond to any fire emergency using portable fire suppression equipment.

ISFSI initiated explosions are not considered credible since no explosive materials are present in the fission product or cover gases. Externally initiated explosions are considered to be bounded by the design basis tornado generated missile load analysis presented in Section 8.2.2. Licensees are required by 10CFR72 Subpart K to confirm that no conditions exist near the ISFSI that would result in pressures due to off-site explosions which would exceed those postulated herein for tornado missile or wind effects. An HSM shield wall(s), which protects against missiles, may be removed for a period of time. However, compensatory measures shall be considered to protect against missiles, if necessary.

Although not explicitly required by the current 10CFR72 (no specific load case), the NUHOMS® design has been reviewed with regard to its susceptibility to sabotage. The issue of sabotage was addressed during public hearings on the TN West Standardized NUHOMS® system (3.67). The specific issues related to sabotage discussed during this hearing were attacks by a truck bomb, a hand held bomb, and a shaped charge placed by saboteurs approaching on foot.

A summary of the conclusions of this review reflecting the expert opinion [3.67] from the public hearing testimony are presented below:

Due to the rugged construction of the HSM, it would take large amounts of explosive (more than 50,000 lbs. of explosive) at very close distances in order to inflict any severe damage to the NUHOMS® facility. It was determined that, due to plant security and vehicle barriers, the scenario of truck bombs is not a feasible scenario. In addition, an explosion resulting from a shaped charge or hand held bomb was not deemed to be severe enough to penetrate a 24" thick concrete shield wall, a 6" air gap, another 18" thick interior concrete wall, and then through the 5/8" thick stainless steel shell of the DSC to cause a leak of radioactive material.

Considering the scenario of someone placing a shape charge inside the HSM through the bottom air vent at a distance below dry shielded canisters sufficient to cause leakage of radioactive material, experiments show [3.67] that the amount of leakage (escape) is much less than 1% of the inventory. The majority of the leakage would remain within the HSM shielded by the concrete walls, rather than escaping through the vents. Consequently, any potential release of radioactive material would be minor.

It should also be noted that a recent regulatory mandate [3.68 and 3.69] has required all U.S. utilities owning and operating nuclear plants to evaluate and protect their facility against the threat of sabotage by car or truck bomb. This evaluation has resulted in increased protection of the plant's vital areas through adoption of explosion-proof barriers and gates. Site specific ISFSI locations within the plant's protected area would be subject to the requirements of this mandate, thus requiring the applicants to ensure the same level of barrier protection for ISFSIs to safeguard against possible sabotage.

Licensees are required to verify that loadings resulting from potential fires and explosions are acceptable in accordance with 10CFR72.212(b)(2).

3.3.7 Materials Handling and Storage

3.3.7.1 Spent Fuel Handling and Storage

All spent fuel handling outside the plant's fuel pool is performed with the fuel assemblies contained in the DSC. Subcriticality during all phases of handling and storage is discussed in Section 3.3.4. The criterion for a safe configuration is an effective mean plus two-sigma neutron multiplication factor (k_{eff}) of 0.95. Section 3.3 calculations show that the expected k_{eff} value is below this limit.

Lift height restrictions are imposed on the TC and DSC with regard to their location and load temperatures. These restrictions are provided in Section 10.3.13.

3.3.7.1.1 Cladding Temperature Limits

Maximum allowable cladding temperature limits are determined for both BWR and PWR design basis fuel according to the methodology presented in Reference 3.21. The maximum allowable average cladding temperature for long term storage is based on the end of life hoop stress in the cladding and the cladding temperature at the beginning of dry storage. The method is estimated to calculate a storage temperature limit that will result in a probability of cladding breach of less than 0.5% in the peak rod during storage. Using this methodology produces cladding temperature limit of 381°C for design basis PWR fuel and 394°C for the design basis BWR fuel cooled for five years or more. Appendix K addresses the cladding temperature limits for the BWR fuel in the NUHOMS®-61BT DSC and Appendix L addresses the cladding temperature limits for the PWR fuel in the NUHOMS®-24PT2 DSC. Since the damage mechanism in this methodology is thermal creep, the temperature limits are based on an average long term ambient temperature during storage of 70°F.

381°C (718°F) and 394°C (741°F) are the cladding temperature limits calculated for design basis 5-year cooled PWR and BWR fuel, respectively. Three steps were taken to extend the same methodology to the range of cooling times in the Fuel Qualification Table shown in 72-1004 CoC technical specifications. First, the same thermal computer

models used to perform the design basis cladding temperature calculation were run parametrically to determine cladding temperature vs. heat input for the PWR and BWR baskets. Second, the methodology of Reference 3.21 was used to develop a relationship between the maximum cladding temperature limit vs. cooling times beyond 5 years. This relationship is shown as a function of fuel burnup in Figure 3.3-17 for PWR fuel and in Figure 3.3-18 for BWR fuel. Third, these two functions were combined to obtain maximum heat input vs. cooling time. In this way, each cell of the Fuel Qualification Table has its own unique cladding temperature limit based on the same methodology as was used for the design basis fuel assemblies.

Higher cladding temperatures may be sustained for brief periods without affecting cladding integrity, however. During short term conditions such as DSC drying, transfer of the DSC to and from the HSM, and off-normal and accident temperature excursions, the maximum fuel cladding temperature is limited to 570°C (1,058°F) or less. This value is based on the results of experiments which have shown that Zircaloy clad rods subjected to short term temperature excursions below 570°C did not show indications of failure (3.20).

3.3.7.1.2 Fuel Rod Horizontal Storage Effects

There is considerable industry experience in the shipment of fuel assemblies in the horizontal position without any indication of fuel rod creep or sag. During overseas shipments, spent fuel assemblies remain horizontal for up to two to three months with estimated cladding temperatures up to 385°C. It should also be noted that the environment for shipping fuel assemblies, given the handling and transportation shock loadings and vibrations is much harsher than that of passive environment of dry storage.

Analytical studies of fuel rod creep behavior have also been conducted in conjunction with the NRC approval of the NUHOMS®-24P TR as documented in Reference 3.51. The studies utilized the creep equation of M. Peehs, et. al. to determine whether creep of fuel were found to be less than 1% for the total storage period. The deflection of the fuel rods between spacer grids was calculated directly since creep effects were found to be negligible. Using standard beam theory for a uniformly loaded tubular beam, conservatively neglecting the bending stiffness of the fuel itself, the maximum deflection over the storage period was found to be 0.015 inches. Deflections of such magnitude do not impede retrieval of the fuel assemblies from the DSC, therefore these effects are not evaluated further.

3.3.7.1.3 Surface Contamination Limits

DSC exterior contamination is minimized by preventing spent fuel pool water from contacting the DSC exterior. DSC loading procedures require that the annulus between the transfer cask and DSC be filled with demineralized water and sealed prior to immersion in the spent fuel pool. Annulus sealing is accomplished by an inflatable seal between the transfer cask and DSC. The combination of the above operations provides assurance that the DSC exterior surface has less residual contamination than required for

shipping cask externals (3.22) Table V, 10CFR71.87(i)(1). Surface swipes of the DSC exterior are taken while in the cask decon area to assure that the maximum DSC removable contamination does not exceed:

Beta/Gamma Emitters	2,200 dpm/100 cm^2
Alpha Emitters	220 dpm/100 cm^2

Transfer cask external contamination is minimized by the use of smooth, easily decontaminated surface finishes to minimize personnel radiation exposures during cask handling operations outside the spent fuel pool. 49CFR173.443(d) (3.64), which governs contamination levels for off-site shipment in a closed exclusive use vehicle, is used as a basis for the transfer cask maximum removable contamination limits as:

Beta/Gamma Emitters	2,200 dpm/100 cm^2
Alpha Emitters	220 dpm/100 cm^2

Containment of radioactive material associated with spent fuel assemblies is provided by fuel cladding, the DSC stainless steel shell, and double seal welded inner and outer closures.

3.3.7.2 Radioactive Waste Treatment

No radioactive waste is generated during the storage period for the NUHOMS® DSC. Radioactive wastes generated during DSC loading operations (contaminated water from the spent fuel pool and potentially contaminated air and helium from the DSC cavity) are treated using existing plant system and procedures as described in Chapter 6.

3.3.7.3 On-site Waste Storage

The requirements for on-site waste storage are satisfied by existing plant facilities for handling and storage of waste from the spent fuel pool and dry active wastes as described in Chapter 6.

3.3.8 Industrial and Chemical Safety

No hazardous chemicals or chemical reactions are involved in the NUHOMS® system loading and storage operations. Industrial safety relating to handling of the cask and DSC are addressed by the licensee's procedures which meet the Occupational Safety and Health Administration (OSHA) requirements.

Table 3.3-1
NUHOMS® System Components Important to Safety

1. Dry Shielded Canister

1a. Internal basket assembly

1b. Top and bottom shield plug assembly (for 24P long cavity DSC only)

1c. DSC containment pressure boundary

2. Horizontal Storage Module

2a. DSC support structure

2b. HSM reinforced concrete and structural steel

2c. HSM passive ventilation system

3. On-site Transfer Cask

3a. Lead shielding material

3b. Structural shell and cover plates

3c. Upper and lower trunnions

Table 3.3-2
Radioactive Material Confinement Barriers for NUHOMS® System

Confinement Barriers and Systems

1. Fuel Cladding
2. DSC Containment Pressure Boundary
3. Inner DSC Closure Weld
4. Outer DSC Closure Weld
5. DSC Cover Plates

Table 3.3-3
Design Parameters for Criticality Analysis of the NUHOMS®-24P DSC

Parameter	Design Value
Fuel Assemblies	
Number/Type	24/PWR
Rod Array	15x15
Number of Fuel Rods	208
Number of CR Guide Tubes	16
Number of Instrument Tubes	1
Rod Pitch (inch)	0.568
Burnup Credit	Yes
Fissile Content (% initial U equivalent)	
U-235 (Credit for Soluble Boron)	4.00
U-235 (Credit for Burnup)	1.45
U-238	Balance
Fuel Pellets	
Density (g/cm^3)	10.14
Diameter (inch)	0.369
Fuel Rod Cladding	
Material	Zircaloy-4
Thickness (inch)	0.0265
Outside Diameter (inch)	0.430
Control Rod Guide Tubes	
Material	Zircaloy-4
Thickness (inch)	0.016
Outside Diameter (inch)	0.530
Instrument Tube	
Material	Zircaloy-4
Thickness (inch)	0.026
Outside Diameter (inch)	0.493

Table 3.3-3

Design Parameters for Criticality Analysis of the NUHOMS®-24P DSC

(concluded)

Parameter	Design Value
DSC Guide Sleeves [1]	
Material	304 Stainless Steel
Thickness (inch)	
12 Outer	0.0598
12 Inner	0.1046
Outside Width (inch)	
12 Outer	9.120
12 Inner	9.109
DSC Oversleeves	
Material	304 Stainless Steel
Thickness (inch)	0.125
DSC Fill Material	
Material	Unborated Water
Density (g/cm^3)	10^{-4} - 1.0
DSC Shell	
Material	304 Stainless Steel
Thickness inch)	0.625
Outside Diameter (inch)	67.25
Cask	
Material	Steel/Lead
Wall Thicknesses (inch)	0.5-3.5-1.5-3.0-0.13
Outside Diameter (inch)	85.3

1. The 24P DSC Guide Sleeve configuration has been changed from twelve interior 12 gage sleeves and twelve 16 gage exterior sleeves to all twenty four sleeves being 12 gage thickness. This changed configuration is bounded by the criticality analysis presented in section 3.3.4.1.

Table 3.3-4
Results Summary for Reactivity Equivalence Burnup Cases
Nominal Case NUHOMS®-24P DSC Model Fully Loaded with Irradiated Fuel

Burnup wt. % IE – GWD/MTU BU	k_{eff} ± σ
2.00 - 10	0.88277 ± 0.00315
2.00 - 15	0.83604 ± 0.00330
2.00 - 20	0.79561 ± 0.00254
2.00 - 25	0.76628 ± 0.00257
2.91 - 20	0.89968 ± 0.00328
2.91 - 25	0.85686 ± 0.00271
2.91 - 30	0.82303 ± 0.00272
2.91 - 35	0.78596 ± 0.00256
3.20 - 25	0.88368 ± 0.00354
3.20 - 30	0.84318 ± 0.00301
3.20 - 35	0.80896 ± 0.00322
3.20 - 40	0.77623 ± 0.00255
3.41 - 30	0.86936 ± 0.00305
3.41 - 35	0.82743 ± 0.00298
3.41 - 40	0.79244 ± 0.00241
3.41 - 45	0.75166 ± 0.00265
4.00 - 30	0.91753 ± 0.00326
4.00 - 35	0.88037 ± 0.00321
4.00 - 40	0.84078 ± 0.00293
4.00 - 45	0.80401 ± 0.00304

Table 3.3-5
Summary of Selected Irradiated Fuel Equivalence Calculation Results Components
NUHOMS®-24P DSC

Equivalent BU Case (wt. % IE - GWD/MTIHM)	k-nominal (1)	ks-nominal (2)	Δk Fission Products	Δk Burnup Total
2.00 - 11.36	0.86802	0.01404	-0.07640	-0.10247
2.91 - 24.04	0.86737	0.00864	-0.12054	-0.21439
3.20 - 27.06	0.86684	0.00908	-0.12813	-0.22987
3.41 - 30.02	0.86670	0.00736	-0.13670	-0.24482
4.00 - 36.85	0.86558	0.00674	-0.14337	-0.29076

(1) Equivalent burnup case K-nominal calculated by regression analysis of Table 3.3-9 K-eff results for each respective initial enrichment case.

(2) Uncertainties listed are 95/95 tolerance level including KENO and regression analysis uncertainties.

Table 3.3-6
Benchmark Critical Experiments

NO.	GENERAL DESCRIPTION	ENRICH-MENT WT. % U235	REFLECTOR	SEPARATING MATERIAL [1]	CHARACTERIZING SEPARATION (CM)	K-eff
1	UO2 ROD LATTICE	2.46	WATER	---	---	1.00727 +/- 0.00474
2	UO2 ROD LATTICE	2.46	1037 PPM B-W	---	---	1.00113 +/- 0.00381
3	UO2 ROD LATTICE	2.46	764 PPM B-W	---	1.64	0.99867 +/- 0.00380
4	UO2 ROD LATTICE	2.46	WATER	84 B4C PINS	1.64	1.00251 +/- 0.00510
5	UO2 ROD LATTICE	2.46	WATER	64 B4C PINS	3.27	0.99974 +/- 0.00386
6	UO2 ROD LATTICE	2.46	WATER	64 B4C PINS	3.27	0.99101 +/- 0.00405
7	UO2 ROD LATTICE	2.46	WATER	34 B4C PINS	4.91	0.98879 +/- 0.00448
8	UO2 ROD LATTICE	2.46	WATER	34 B4C PINS	4.91	0.98978 +/- 0.00506
9	UO2 ROD LATTICE	2.46	WATER	---	6.54	0.98688 +/- 0.00459
10	UO2 ROD LATTICE	2.46	143 PPM B-W	---	4.91	0.98624 +/- 0.00492
11	UO2 ROD LATTICE	2.46	514 PPM B-W	S.S.	1.64	1.00622 +/- 0.00391
12	UO2 ROD LATTICE	2.46	217 PPM B-W	S.S.	3.27	0.99421 +/- 0.00432
13	UO2 ROD LATTICE	2.46	15 PPM B-W	1.614% B/AL	1.64	1.00359 +/- 0.00544
14	UO2 ROD LATTICE	2.46	92 PPM B-W	1.257% B/AL	1.64	0.99604 +/- 0.00403
15	UO2 ROD LATTICE	2.46	395 PPM B-W	0.401% B/AL	1.64	0.99189 +/- 0.00374
16	UO2 ROD LATTICE	2.46	121 PPM B-W	0.401% B/AL	3.27	0.98422 +/- 0.00447
17	UO2 ROD LATTICE	2.46	487 PPM B-W	0.242% B/AL	1.64	0.99780 +/- 0.00403
18	UO2 ROD LATTICE	2.46	197 PPM B-W	0.242% B/AL	3.27	0.99780 +/- 0.00434
19	UO2 ROD LATTICE	2.46	634 PPM B-W	0.100% B/AL	1.64	0.99286 +/- 0.00396
20	UO2 ROD LATTICE	2.46	320 PPM B-W	0.100% B/AL	3.27	0.99612 +/- 0.00438
21	UO2 ROD LATTICE	2.46	72 PPM B-W	0.100% B/AL	4.91	0.99317 +/- 0.00462
22	UO2 ROD LATTICE	2.35	WATER	---	---	0.99472 +/- 0.00425
23	UO2 ROD LATTICE	2.35	WATER	---	11.92	1.00292 +/- 0.00420
24	UO2 ROD LATTICE	2.35	WATER	---	8.39	0.98799 +/- 0.00404
25	UO2 ROD LATTICE	2.35	WATER	---	6.39	0.99114 +/- 0.00403
26	UO2 ROD LATTICE	2.35	WATER	---	8.01	0.99997 +/- 0.00456
27	UO2 ROD LATTICE	2.35	WATER	---	4.46	0.99524 +/- 0.00384

NO.	GENERAL DESCRIPTION	ENRICH-MENT WT. % U235	REFLECTOR	SEPARATING MATERIAL [1]	CHARACTERIZING SEPARATION (CM)	K-eff
28	UO2 ROD LATTICE	2.35	WATER	28.7% BORAL	6.34	0.99355 +/- 0.00393
29	UO2 ROD LATTICE	2.35	WATER	28.7% BORAL	9.03	0.99810 +/- 0.00452
30	UO2 ROD LATTICE	2.35	WATER	S.S.	6.88	0.99000 +/- 0.00477
31	UO2 ROD LATTICE	2.35	WATER	S.S.	7.64	0.99864 +/- 0.00465
32	UO2 ROD LATTICE	2.35	WATER	S.S.	7.51	0.99799 +/- 0.00475
33	UO2 ROD LATTICE	2.35	WATER	S.S.	7.42	0.98861 +/- 0.00451
34	UO2 ROD LATTICE	2.35	WATER	S.S.	7.76	0.99427 +/- 0.00514
35	UO2 ROD LATTICE	2.35	WATER	S.S.	10.44	0.99571 +/- 0.00377
36	UO2 ROD LATTICE	2.35	WATER	S.S.	11.47	0.99621 +/- 0.00397
37	UO2 ROD LATTICE	2.35	WATER	1.05% S.S.	7.56	0.99051 +/- 0.00460
38	UO2 ROD LATTICE	2.35	WATER	1.05% S.S.	9.62	0.99881 +/- 0.00500
39	UO2 ROD LATTICE	2.35	WATER	1.62% S.S.	7.36	0.99196 +/- 0.00412
40	UO2 ROD LATTICE	2.35	WATER	1.62% S.S.	9.52	0.99258 +/- 0.00481

NOTES: [1] PERCENTAGES (%) REFER TO WEIGHT PERCENT BORON CONTENT.
K_{eff}(ALL) 0.99512 ± 0.00545

Table 3.3-7
CSAS2 PuO2 - UO2 Critical Experiment Benchmark Calculations[1]

Lattice I.D.	Lattice Pitch (cm)	H/Pu Ratio	k_{eff} ± 1 s
30	1.778	184.2	1.00742 ± 0.00391
31	1.778	184.2	1.01964 ± 0.00434
32	2.209	389.2	1.00497 ± 0.00390
33	2.209	389.2	1.01036 ± 0.00333
34	2.514	561.1	1.00920 ± 0.00431
35	2.514	561.1	1.01224 ± 0.00409

(1) PuO2 - UO2 benchmark experiments are described in Reference 3.42.

Table 3.3-8
CSAS2/SAS2/CSMO-2E Irradiated FA Reactivity Calculations Method Validation by Comparison to CASMO-2 k_{inf} Results

Job Name	Case No.	Initial Enrichment (% U235)	Burnup (GW/MTU)	Mod. Temp. (°K)	CASMO-2E k_{inf}	CSAS2 k_{inf}	CSAS Bias[1] (Δk/k)
CAS2EY3	113	2.91	0	293	1.37215	1.39212	0.01455 +/- 0.00292
CAS2EY3	114	2.91	0	422	1.36068	1.38186	0.01557 +/- 0.00304
CAS2EY3	122	2.91	20	422	1.13572	1.16556	0.02627 +/- 0.00251
CAS2EY3	123	2.91	30	422	1.04895	1.07833	0.02801 +/- 0.00258
CAS2EEC	114	3.20	0	422	1.38361	1.40239	0.01357 +/- 0.00274
CAS2EEC	123	3.20	30	422	1.07527	1.10647	0.02902 +/- 0.00281
CAS2EEC	124	3.20	40	422	0.99756	1.02617	0.02868 +/- 0.00193
CAS2E5L	114	3.41	0	422	1.39818	1.41200	0.00988 +/- 0.00303
CAS2E5L	123	3.41	30	422	1.09350	1.12349	0.02743 +/- 0.00257
CAS2E5L	124	3.41	40	422	1.01482	1.04365	0.02841 +/- 0.00222

[1] Calculated (CSAS2 k_{inf} - CASMO2 k_{inf}) / (CASMO2 k_{inf}).

Table 3.3-9
Axial Burnup Variation Sensitivity Results Summary -NUHOMS®-24P DSC
Fully Loaded with 4 wt. % Irradiated Fuel Flooded with Pure Water

Sensitivity Case (End BU/Mid BU)[1]	Bias (Sens Case - Nominal)		CSAS2 Sigma
4.5" End Segment Case			
10 / 40	-0.00153	±	0.00291
10 / 45	-0.03590	±	0.00293
Calculated 10 / 42.0 Bias[2]	-0.01528	±	0.00293
9.0" End Segment Case			
15 / 40	0.02411	±	0.00291
15 / 45	0.00985	±	0.00284
Calculated 15 / 43.6 Bias[2]	0.01384	±	0.00284
13.5" End Segment Case			
20 / 40	0.03807	±	0.00286
20 / 45	0.02869	±	0.00281
Calculated 20 / 44.6 Bias[2]	0.02944	±	0.00286
20 / 40	0.00970	±	0.00270
20 / 45	0.00147	±	0.00330
Calculated 20 / 44.6 Case w/os[3]	0.00213	±	0.00330
18.0" End Segment Case			
25 / 45	0.02949	±	0.00250
Calculated 25 / 45.0 Bias[2]	0.02949	±	0.00250
Calculated 25 / 45.0 Case w/os[3]	0.00325	±	0.00250
24.0" End Segment Case			
30 / 45	0.02949	±	0.00271
Calculated 30 / 45.0 Bias[2]	0.02949	±	0.00271

(1) The skewed axial BU profile is modeled in the CASA2 runs with two axial zones in each case. The DSC fuel array is modeled with water reflection in the +Z direction and is specularly reflected at the midplane. Therefore, the axial BU profiles are modeled symmetrical along the Z axis.

(2) Bias for each case calculated for a worst-case skewed axial burnup profile for each respective end segment geometry case which results in an assembly average of 40 GWD/MTIHM.

(3) These cases demonstrate equivalence of a uniform axial BU profile and a worst case skewed axial BU profile in a DSC design which includes SS oversleeves; residual bias = 0.00325 ± 0.00330 at 40 GWD/MTU burnup.

Table 3.3-10
Moderator Density Sensitivity Results Summary for 1.45 wt. % Non-Irradiated Fuel NUHOMS®-24P DSC

Moderator Density (g/cc)	Nominal k_{eff}		CSAS2 Sigma
1.0000	0.87177	±	0.00348
0.9982	0.87170	±	0.00244
0.9579	0.87680	±	0.00353
0.9000	0.88151	±	0.00341
0.8000	0.88778	±	0.00329
0.7000	0.89083	±	0.00310
0.6500	0.88932	±	0.00311
0.6000	0.88581	±	0.00313
0.5500	0.89222	±	0.00330
0.5000	0.88453	±	0.00289
0.4500	0.88312	±	0.00363
0.4000	0.87051	±	0.00356
0.3000	0.83801	±	0.00276
0.2000	0.76849	±	0.00327
0.1000	0.60276	±	0.00311
0.0010	0.32337	±	0.00211
0.0001	0.30212	±	0.00207
Moderator Density Bias	0.02052	±	0.00330

[1] Nominal base case.

Table 3.3-11
DSC Criticality Analysis Summary of Final k_{eff} Result Components for Selected Points on Reactivity Equivalence Curve NUHOMS®-24P DSC

	Initial Enrichment Point					
Component	1.45	2.00	2.91	3.20	3.41	4.00
k-nominal	0.87170	0.86802	0.86737	0.86684	0.86670	0.86558
B-method	0.00488	0.00488	0.00488	0.00488	0.00488	0.00488
B-axial	0.00000	0.00092	0.00195	0.00220	0.00246	0.00299
B-mod	0.02052	0.02052	0.02052	0.02502	0.02502	0.02502
B-ref	0.00802	0.00802	0.00802	0.00802	0.00802	0.00802
ks-nominal	0.00488	0.01404	0.00864	0.0908	0.00736	0.00674
ks-method	0.01161	0.01161	0.01161	0.01161	0.01161	0.01161
ks-axial	0.00000	0.00660	0.00660	0.00660	0.00660	0.00660
ks-mechanical	0.03994	0.03994	0.03994	0.03994	0.03994	0.03994
ks-reflector	0.00508	0.00508	0.00508	0.00508	0.00508	0.00508
ks-burnup	0.00000	0.00512	0.01072	0.01149	0.01224	0.1454
ks-mod	0.00660	0.00660	0.00660	0.00660	0.00660	0.00660
k_{eff}	0.94782	0.94782	0.94782	0.94782	0.94782	0.94781

(1) Irradiated fuel uncertainties include 95/95 uncertainty associated regression analysis

Table 3.3-12
NUHOMS® 52B Baseline Case Fuel Design

Fuel Pellet O.D.	0.487 in
Fuel Clad I.D.	0.489 in
Fuel Clad O.D.	0.563 in
Fuel Rod Pitch	0.738 in
Active Fuel Height	146 in
Flow Channel Outside Dimension	5.454 in
Flow Channel Thickness	0.08 in
Lattice Enrichment, %U235	4.00%
Rod Array (n x n rods)	7
Rod Locations	49
Fueled Rod Locations	49
Fuel Description	GE 7x7 GE-2, V2

Table 3.3-13
NUHOMS® 52B DSC Nominal Basket Parameters

Neutron Absorber Sheet Boron Content	0.75 wt. % B
Neutron Absorber Sheet Thickness	0.1345"
Neutron Absorber Sheet Width	6.3"
Moderator Density	0.998 g/cc
Fuel Assembly Position	See Figure 3.3-10

Table 3.3-14
Transfer Cask Parameters

	Thickness inches	Radius inches
DSC Inner Radius	→	33
DSC Outer Radius	0.625	33.625
Cask Inside Radius	→	34
Cask Inner Shell O.R.	0.5	34.5
Cask Gamma Shield O.R.	3.5	38
Cask Struct. Shell O.R	1.5	39.5
Cask Neutron Shield O.R.	3	42.5
Cask N.S. Panel O.R.	0.125	42.625

Table 3.3-15
NUHOMS® 52B Analysis KENO Regional Atom Densities

Fuel Pellet

Element	H-R ID No	atom/b-cm
OXYGEN	8100	4.655E-02
U235	Varies	9.310E-04
U238	Varies	2.234E-02

Moderator

Element	H-R ID No	atom/b-cm
HYDROGEN	1101	6.6736E-02
OXYGEN	8100	3.3368E-02

Zircaloy-4

Element	H-R ID No	atom/b-cm
CHROMIUM	24100	7.5166E-05
IRON	26100	9.4476E-05
NICKEL	28100	3.6613E-05
ZIRCONIUM	40100	4.2721E-02

Absorber

Element	H-R ID No	atom/b-cm
BORON	5100	3.2795E-03
CHROMIUM	24100	1.7274E-02
MANGANESE	25100	1.7210E-03
IRON	26100	5.4809e-02
NICKEL	28100	1.0870E-02

Table 3.3-15
NUHOMS® 52B Analysis KENO Regional Atom Densities
(concluded)

Carbon Steel

Element	H-R ID No	atom/b-cm
MANGANESE	25100	8.6048E-04
IRON	26100	8.3801E-02

Stainless Steel

Element	H-R ID No	atom/b-cm
CHROMIUM	24100	1.7274E-02
MANGANESE	25100	8.6048E-04
IRON	26100	5.9253E-02
NICKEL	28100	8.0520E-03

Lead

Element	H-R ID No	atom/b-cm
LEAD	82100	3.2960E-02

Cask Neutron Shield

Element	H-R ID No	atom/b-cm
HYDROGEN	1101	5.0996E-02
CARBON	6100	8.2505E-03
OXYGEN	8100	3.7793E-02
ALUMINUM	13100	7.0275E-03
SILICON	14100	1.2680E-03
CALCIUM	20100	1.4835E-03
IRON	26100	1.0628E-04

Table 3.3-16
Summary of PNL Critical Benchmark Calculations

TN West Ref. #	Enrich-ment (wt. %)	Rod Pitch (mm)	Absorber Material	Absorber Thickness (mm)	Abs. to Cluster Distance (mm)	Reflector Material	Refl. to Cluster Distance (mm)	Critical Cluster Sep. (mm)	$K_{eff} \pm 1\sigma$
1	4.31%	25.40	N/A	N/A	N/A	Moderator	N/A	117.2	1.00462 ± 0.00269
2	4.31%	25.40	N/A	N/A	N/A	Moderator	N/A	116.8	1.01742 ± 0.00269
3	4.31%	25.40	SS304L	4.85	2.45	Moderator	N/A	85.8	1.00582 ± 0.00262
4	4.31%	25.40	SS304L	4.85	32.77	Moderator	N/A	96.5	1.00710 ± 0.00275
5	4.31%	25.40	SS304L	3.02	4.28	Moderator	N/A	92.2	1.01261 ± 0.00286
6	4.31%	25.40	SS304L	3.02	32.77	Moderator	N/A	97.6	1.01379 ± 0.00235
7	4.31%	25.40	SS304L1.1%	2.98	4.32	Moderator	N/A	61.0	1.01631 ± 0.00259
8	4.31%	25.40	SS304L1.1%	2.98	32.77	Moderator	N/A	80.8	1.00913 ± 0.00286
9	4.31%	25.40	SS304L1.6%	2.98	4.32	Moderator	N/A	57.6	1.01346 ± 0.00284
10	4.31%	25.40	SS304L1.6%	2.98	32.77	Moderator	N/A	79.0	1.00796 ± 0.00288
11	4.31%	25.40	BoralA	7.13	32.77	Moderator	N/A	67.2	1.00822 ± 0.00278
12	4.31%	25.40	Copper	6.46	0.84	Moderator	N/A	81.5	1.00959 ± 0.00273
13	4.31%	25.40	Copper	6.46	32.77	Moderator	N/A	94.2	1.00687 ± 0.00282
14	4.31%	25.40	Copper	3.37	0.00	Moderator	N/A	84.8	1.00574 ± 0.00255
15	4.31%	25.40	Copper	3.37	42.41	Moderator	N/A	96.4	1.00715 ± 0.00252
16	4.31%	25.40	Cu/Cd	3.57	0.00	Moderator	N/A	66.6	1.01169 ± 0.00283
17	4.31%	25.40	Cu/Cd	3.57	42.41	Moderator	N/A	83.5	1.01121 ± 0.0028
18	4.31%	25.40	Cadmium	0.291	7.01	Moderator	N/A	59.3	1.01198 ± 0.00258
19	4.31%	25.40	Cadmium	0.291	32.77	Moderator	N/A	74.2	1.00945 ± 0.00284
20	4.31%	25.40	Cadmium	0.610	6.69	Moderator	N/A	59.6	1.01339 ± 0.0028
21	4.31%	25.40	Cadmium	0.610	32.77	Moderator	N/A	74.2	1.01292 ± 0.00269
22	4.31%	25.40	Cadmium	0.901	6.40	Moderator	N/A	58.7	1.01386 ± 0.00277
23	4.31%	25.40	Cadmium	0.901	32.77	Moderator	N/A	73.8	1.01380 ± 0.00271
24	4.31%	25.40	Cadmium	2.006	5.29	Moderator	N/A	56.8	1.01429 ± 0.00248
25	4.31%	25.40	Cadmium	2.006	32.77	Moderator	N/A	72.8	1.00814 ± 0.00264
26	4.31%	25.40	Aluminum	6.25	1.05	Moderator	N/A	107.2	1.00970 ± 0.00279
27	4.31%	25.40	Aluminum	6.25	32.77	Moderator	N/A	107.7	1.01194 ± 0.00278
28	4.31%	25.40	Zircaloy-4	6.52	0.78	Moderator	N/A	109.2	1.01439 ± 0.00263
29	4.31%	25.40	Zircaloy-4	6.52	32.77	Moderator	N/A	108.6	1.00760 ± 0.00269
30	2.35%	20.32	N/A	N/A	N/A	Steel	0	98.9	1.01780 ± 0.00279
31	2.35%	20.32	N/A	N/A	N/A	Steel	6.6	104.4	1.00790 ± 0.00263

Table 3.3-16
Summary of PNL Critical Benchmark Calculations

(continued)

TN West Ref. #	Enrich-ment (wt. %)	Rod Pitch (mm)	Absorber Material	Absorber Thickness (mm)	Abs. to Cluster Distance (mm)	Reflector Material	Refl. to Cluster Distance (mm)	Critical Cluster Sep. (mm)	$K_{eff} \pm 1\sigma$		
32	2.35%	20.32	N/A	N/A	N/A	Steel	13.21	104.4	1.01002	±	0.00263
33	2.35%	20.32	N/A	N/A	N/A	Steel	26.16	96.0	1.00366	±	0.00281
34	2.35%	20.32	N/A	N/A	N/A	Steel	39.12	87.5	1.00960	±	0.00269
35	2.35%	20.32	N/A	N/A	N/A	Moderator	N/A	74.7	1.01039	±	0.00264
36	2.35%	16.84	N/A	N/A	N/A	Steel	0	85.7	1.01221	±	0.00285
37	2.35%	16.84	N/A	N/A	N/A	Steel	6.6	91.7	1.00653	±	0.00263
38	2.35%	16.84	N/A	N/A	N/A	Steel	13.21	91.0	1.00398	±	0.00304
39	2.35%	16.84	N/A	N/A	N/A	Steel	16.84	92.5	1.00716	±	0.00285
40	2.35%	16.84	N/A	N/A	N/A	Steel	23.44	88.7	1.00694	±	0.00262
41	2.35%	16.84	N/A	N/A	N/A	Steel	30.05	86.5	0.99909	±	0.00255
42	2.35%	16.84	N/A	N/A	N/A	Steel	39.12	81.3	1.00414	±	0.0025
43	2.35%	16.84	N/A	N/A	N/A	Steel	67.26	72.6	1.00344	±	0.00245
44	2.35%	16.84	N/A	N/A	N/A	Moderator	N/A	68.3	1.00699	±	0.00242
45	4.31%	25.40	N/A	N/A	N/A	Steel	0	117.6	1.01096	±	0.00309
46	4.31%	25.40	N/A	N/A	N/A	Steel	6.6	131.2	1.00367	±	0.00326
47	4.31%	25.40	N/A	N/A	N/A	Steel	13.21	129.9	1.01098	±	0.00268
48	4.31%	25.40	N/A	N/A	N/A	Steel	26.16	113.1	1.00763	±	0.00316
49	4.31%	25.40	N/A	N/A	N/A	Steel	54.05	86.7	1.00920	±	0.00309
50	4.31%	25.40	N/A	N/A	N/A	Moderator	N/A	71.0	1.01488	±	0.00262
51	4.31%	18.92	N/A	N/A	N/A	Steel	0	143.9	1.00208	±	0.003
52	4.31%	18.92	N/A	N/A	N/A	Steel	6.6	152.6	1.00385	±	0.00301
53	4.31%	18.92	N/A	N/A	N/A	Steel	13.21	153.9	1.00582	±	0.00322
54	4.31%	18.92	N/A	N/A	N/A	Steel	19.56	153.6	1.00894	±	0.00323
55	4.31%	18.92	N/A	N/A	N/A	Steel	26.16	149.7	1.00040	±	0.00298
56	4.31%	18.92	N/A	N/A	N/A	Steel	54.05	133.4	1.00556	±	0.00323
57	4.31%	18.92	N/A	N/A	N/A	Moderator	N/A	124.8	1.01910	±	0.00261
58	4.31%	18.92	N/A	N/A	N/A	Moderator	N/A	125.0	1.01506	±	0.00275
59	2.35%	16.84	N/A	N/A	N/A	Steel	13.21	91.0	1.02322	±	0.00258
60	2.35%	16.84	SS304L	3.02	N/A	Steel	13.21	78.7	1.00976	±	0.0026
61	2.35%	16.84	SS304L1.1 %	2.98	N/A	Steel	13.21	43.9	1.01084	±	0.00267
62	2.35%	16.84	BoralB	2.92	N/A	Steel	13.21	22.8	1.00711	±	0.0031
63	2.35%	16.84	Boroflex	2.26	N/A	Steel	13.21	25.7	1.01203	±	0.00304

Table 3.3-16
Summary of PNL Critical Benchmark Calculations

(continued)

TN West Ref. #	Enrich-ment (wt. %)	Rod Pitch (mm)	Absorber Material	Absorber Thickness (mm)	Abs. to Cluster Distance (mm)	Reflector Material	Refl. to Cluster Distance (mm)	Critical Cluster Sep. (mm)	$K_{eff} \pm 1\sigma$
64	2.35%	16.84	Cadmium	0.61	N/A	Steel	13.21	34.5	1.00903 ± 0.00259
65	2.35%	16.84	Copper	3.37	N/A	Steel	13.21	73.8	1.00367 ± 0.00267
66	2.35%	16.84	Cu/Cd	3.57	N/A	Steel	13.21	50.2	1.00470 ± 0.00273
67	4.31%	18.92	N/A	N/A	N/A	Steel	19.56	153.6	0.99884 ± 0.0029
68	4.31%	18.92	SS304L	3.02	N/A	Steel	19.56	132.7	1.00254 ± 0.00298
69	4.31%	18.92	SS304L1.1%	2.98	N/A	Steel	19.56	93.5	1.00232 ± 0.00299
70	4.31%	18.92	BoralB	2.92	N/A	Steel	19.56	78.2	1.00499 ± 0.00302
71	4.31%	18.92	Boroflex	2.26	N/A	Steel	19.56	78.9	0.99841 ± 0.00289
72	4.31%	18.92	Cadmium	0.61	N/A	Steel	19.56	84.6	1.00984 ± 0.00304
73	4.31%	18.92	Copper	3.37	N/A	Steel	19.56	129.9	1.00542 ± 0.00296
74	4.31%	18.92	Cu/Cd	3.57	N/A	Steel	19.56	100.9	1.00094 ± 0.00302
75	2.35%	16.84	N/A	N/A	N/A	Uranium	0	76.5	0.98897 ± 0.00269
76	2.35%	16.84	N/A	N/A	N/A	Uranium	13.21	90.9	0.98111 ± 0.00225
77	2.35%	16.84	N/A	N/A	N/A	Uranium	26.16	94.2	0.98716 ± 0.00263
78	2.35%	16.84	N/A	N/A	N/A	Uranium	39.12	87.8	1.00210 ± 0.00262
79	2.35%	16.84	N/A	N/A	N/A	Lead	0	96.5	1.00826 ± 0.00254
80	2.35%	16.84	N/A	N/A	N/A	Lead	6.6	97.0	1.01217 ± 0.00276
81	2.35%	16.84	N/A	N/A	N/A	Lead	32.75	80.9	1.00471 ± 0.00261
82	2.35%	16.84	N/A	N/A	N/A	Moderator	N/A	61.8	1.00797 ± 0.00259
83	2.35%	16.84	N/A	N/A	N/A	Moderator	N/A	68.1	1.00909 ± 0.00266
84	4.31%	18.92	N/A	N/A	N/A	Uranium	0	148.5	0.97412 ± 0.00294
85	4.31%	18.92	N/A	N/A	N/A	Uranium	6.6	162.3	0.98458 ± 0.00283
86	4.31%	18.92	N/A	N/A	N/A	Uranium	13.21	177.9	0.98622 ± 0.00333
87	4.31%	18.92	N/A	N/A	N/A	Uranium	19.56	187.6	0.99678 ± 0.00262
88	4.31%	18.92	N/A	N/A	N/A	Uranium	26.16	188.9	0.99595 ± 0.00294
89	4.31%	18.92	N/A	N/A	N/A	Uranium	32.75	183.0	0.99409 ± 0.00284
90	4.31%	18.92	N/A	N/A	N/A	Uranium	54.05	159.2	0.99861 ± 0.00275
91	4.31%	18.92	N/A	N/A	N/A	Moderator	N/A	118.8	1.01400 ± 0.00252
92	4.31%	18.92	N/A	N/A	N/A	Lead	0	172.6	1.00956 ± 0.00291
93	4.31%	18.92	N/A	N/A	N/A	Lead	6.6	177.0	1.01158 ± 0.00269
94	4.31%	18.92	N/A	N/A	N/A	Lead	19.56	169.5	1.00399 ± 0.00286
95	4.31%	18.92	N/A	N/A	N/A	Lead	50.01	138.7	1.00093 ± 0.00286

Table 3.3-16
Summary of PNL Critical Benchmark Calculations

(continued)

TN West Ref. #	Enrich-ment (wt. %)	Rod Pitch (mm)	Absorber Material	Absorber Thickness (mm)	Abs. to Cluster Distance (mm)	Reflector Material	Refl. to Cluster Distance (mm)	Critical Cluster Sep. (mm)	$K_{eff} \pm 1\sigma$
96	2.35%	20.32	N/A	N/A	N/A	Moderator	N/A	119.2	1.01148 ± 0.00268
97	2.35%	20.32	N/A	N/A	N/A	Moderator	N/A	84.1	1.00789 ± 0.00238
98	2.35%	20.32	N/A	N/A	N/A	Moderator	N/A	84.2	1.00908 ± 0.00238
99	2.35%	20.32	N/A	N/A	N/A	Moderator	N/A	100.5	1.01146 ± 0.00265
100	2.35%	20.32	N/A	N/A	N/A	Moderator	N/A	63.9	1.01521 ± 0.0025
101	2.35%	20.32	N/A	N/A	N/A	Moderator	N/A	80.1	0.99060 ± 0.00262
102	2.35%	20.32	N/A	N/A	N/A	Moderator	N/A	44.6	1.00657 ± 0.00229
103	2.35%	20.32	SS304L	4.85	6.45	Moderator	N/A	68.8	1.00958 ± 0.00239
104	2.35%	20.32	SS304L	4.85	27.32	Moderator	N/A	76.4	1.01405 ± 0.00266
105	2.35%	20.32	SS304L	4.85	40.42	Moderator	N/A	75.1	1.00381 ± 0.00271
106	2.35%	20.32	SS304L	3.02	6.45	Moderator	N/A	74.2	1.00641 ± 0.00251
107	2.35%	20.32	SS304L	3.02	40.42	Moderator	N/A	77.6	1.01278 ± 0.00253
108	2.35%	20.32	SS304L	3.02	6.45	Moderator	N/A	104.4	1.00873 ± 0.00242
109	2.35%	20.32	SS304L	3.02	40.42	Moderator	N/A	114.7	1.00964 ± 0.00238
110	2.35%	20.32	SS304L1.1%	2.98	6.45	Moderator	N/A	75.6	1.00658 ± 0.00244
111	2.35%	20.32	SS304L1.1%	2.98	40.42	Moderator	N/A	96.2	1.01159 ± 0.00259
112	2.35%	20.32	SS304L1.6%	2.98	6.45	Moderator	N/A	73.6	1.00728 ± 0.0026
113	2.35%	20.32	SS304L1.6%	2.98	40.42	Moderator	N/A	95.2	1.00881 ± 0.00247
114	2.35%	20.32	BoralA	7.13	6.45	Moderator	N/A	63.3	1.00871 ± 0.00245
115	2.35%	20.32	BoralA	7.13	44.42	Moderator	N/A	90.3	1.01064 ± 0.00237
116	2.35%	20.32	BoralA	7.13	6.45	Moderator	N/A	50.5	1.00950 ± 0.00246
117	2.35%	20.32	Copper	6.46	6.45	Moderator	N/A	66.2	1.01099 ± 0.0025
118	2.35%	20.32	Copper	6.46	27.32	Moderator	N/A	77.2	1.00594 ± 0.0026
119	2.35%	20.32	Copper	6.46	44.42	Moderator	N/A	75.1	1.00779 ± 0.00246
120	2.35%	20.32	Copper	3.37	6.45	Moderator	N/A	68.8	1.00577 ± 0.00228
121	2.35%	20.32	Copper	3.37	40.42	Moderator	N/A	70.0	1.00410 ± 0.00227
122	2.35%	20.32	Cu/Cd	3.57	6.45	Moderator	N/A	51.5	1.00808 ± 0.00244
123	2.35%	20.32	Cadmium	0.61	6.45	Moderator	N/A	67.4	1.00808 ± 0.00244
124	2.35%	20.32	Cadmium	0.61	14.82	Moderator	N/A	76.0	1.00606 ± 0.00253
125	2.35%	20.32	Cadmium	0.61	40.42	Moderator	N/A	93.7	1.00616 ± 0.00249
126	2.35%	20.32	Cadmium	0.291	14.82	Moderator	N/A	77.8	1.01101 ± 0.0023
127	2.35%	20.32	Cadmium	0.291	40.42	Moderator	N/A	94.0	1.01378 ± 0.00281

Table 3.3-16
Summary of PNL Critical Benchmark Calculations

(concluded)

TN West Ref. #	Enrich-ment (wt. %)	Rod Pitch (mm)	Absorber Material	Absorber Thickness (mm)	Abs. to Cluster Distance (mm)	Reflector Material	Refl. to Cluster Distance (mm)	Critical Cluster Sep. (mm)	$K_{eff} \pm 1\sigma$
128	2.35%	20.32	Cadmium	0.901	14.82	Moderator	N/A	75.4	1.00665 ± 0.00241
129	2.35%	20.32	Cadmium	0.901	40.42	Moderator	N/A	93.9	1.01462 ± 0.00257
130	2.35%	20.32	Aluminum	6.25	6.45	Moderator	N/A	86.7	1.01100 ± 0.00245
131	2.35%	20.32	Aluminum	6.25	40.42	Moderator	N/A	87.8	1.00750 ± 0.00255
132	2.35%	20.32	Aluminum	6.25	44.42	Moderator	N/A	88.3	1.00336 ± 0.00252
133	2.35%	20.32	Zircaloy-4	6.52	6.45	Moderator	N/A	87.9	1.01140 ± 0.00241
134	2.35%	20.32	Zircaloy-4	6.52	40.42	Moderator	N/A	87.8	1.00958 ± 0.00244

Notes: Statistical analysis of these results shows KENO5A/HR-16/PN-HET methodology has no significant bias for fuel enrichment, assembly pitch, rod pitch, reflector distance, absorber material, absorber thickness, and absorber concentration. A bias was noted for reflector material. Cases 75-78 and 84-90 (closely DU-reflected) were discarded for statistical purposes. The bias indicated by the remaining population of 123 criticals is -0.00859±0.00458 (σ). This bias is not applicable to closely DU-reflected systems.

Table 3.3-17
Qualified BWR Fuel Designs[2]

Fuel Design
GE 7x7 GE-2, V1a[1]
GE 7x7 GE-2, V1b
GE 7x7 GE-2, V2
GE 7x7 GE-3, V1
GE 7x7 GE-3, V2a
GE 7x7 GE-3, V2b
GE 8x8 GE-4, V1
GE 8x8 GE-4, V2a
GE 8x8 GE-4, V2b
GE 8x8 GE-5, V1
GE 8x8 GE-5, V2
GE 8x8 Pres., V1
GE 8x8 Pres., V2
GE 8x8 Barrier, V1
GE 8x8 Barrier, V2
GE 8x8 GE-8, V1a
GE 8x8 GE-8, V1b
GE 8x8 GE-8, V2a
GE 8x8 GE-8, V2b
GE Dresden Unit 1

(1) Fuel designations are consistent with (3.61).

(2) See Appendix K for qualified BWR fuel design in the NUHOMS®-61BT DSC.

Table 3.3-18
NUHOMS®-52B KENO Analysis Fuel Assembly Position Results

Distance Inward (in)	k_{eff}	1 sigma
0.28	0.90335	0.00297
0.14	0.88907	0.00293
0.00	0.87894	0.00318
-0.14	0.88120	0.00322
-0.28	0.87561	0.00297

Table 3.3-19
NUHOMS®-52B KENO Analysis Neutron Absorber Boron Content Results

Absorber Boron Loading (wt. % B)	k_{eff}	1 sigma
0.00	1.04033	0.00471
0.50	0.90352	0.00531
0.75	0.87894	0.00318
1.00	0.87211	0.00546
1.25	0.86038	0.00509
1.50	0.85657	0.00506
2.00	0.83100	0.00535

Table 3.3-20
NUHOMS®-52B KENO Analysis Neutron Absorber Sheet Thickness Results

Absorber Thickness (in)	k_{eff}	1 sigma
0.100	0.90762	0.00444
0.110	0.89825	0.00381
0.120	0.88812	0.00441
0.130	0.88728	0.00448
0.135	0.87894	0.00318
0.140	0.88802	0.00447
0.150	0.86959	0.00424

Table 3.3-21
NUHOMS®-52B KENO Analysis Neutron Absorber Sheet Width Results

Absorber Width (in)	k_{eff}	1 sigma
5.50	0.89020	0.00343
6.00	0.88929	0.00311
6.20	0.88715	0.00282
6.30	0.87894	0.00318
6.40	0.88173	0.00306
6.50	0.88110	0.00297
7.00	0.87558	0.00326

Table 3.3-22
NUHOMS®-52B KENO Analysis Moderator Density Results

Moderator Density (g/cc)	k_{eff}	1 sigma
0.005	0.37492	0.00161
0.010	0.37472	0.00158
0.100	0.71468	0.00266
0.200	0.80383	0.00412
0.300	0.83650	0.00396
0.400	0.86271	0.00443
0.500	0.87469	0.00391
0.600	0.87497	0.00412
0.700	0.87249	0.00442
0.800	0.88022	0.00412
0.900	0.87848	0.00429
0.998	0.87894	0.00318
1.000	0.88622	0.00495

Table 3.3-23
NUHOMS®-52B KENO Analysis Loss of Absorber Sheet Results

Number of Sheets Lost	k_{eff}	1 sigma
0	0.87894	0.00318
1	0.88907	0.00307
4	0.92855	0.00294

Table 3.3-24
NUHOMS® 52B KENO Analysis Summary of Biases and Uncertainties

Calculation Summary for NUHOMS®-52B Maximum k_{eff}		
Reference Case	$k_{eff} \pm 1\sigma$	$k_{eff} \pm 2\sigma$
GE-2 7x7 BWR Fuel Baseline Reference Case	0.87894 ± 0.00318	0.87894 ± 0.00636 (k_{NOM}) (U_{NOM})
Biases		95/95 Uncertainty $\Delta k \pm 2\sigma$
KENO5/HR-16/PN-HET Calculational Bias		-0.00859 ± 0.00916 (B_{KENO}) (U_{KENO})
Fuel Design Bias		0.00177 (B_F)
Uncorrelated Mechanical Uncertainties	Calculated Uncertainty $\Delta k \pm 1\sigma$	95/95 Uncertainty $\Delta k + 2\sigma$
Fuel Assembly Position	0.02382 ± 0.00495 (k_{POS}) (U_{POS})	0.03372
Storage Cell Location	0.00833 ± 0.00311 (k_{LOC}) (U_{LOC})	0.01455
Neutron Absorber Sheet Boron Content	0.00000 ± 0.00000 (k_B) (U_B)	0.00000
Neutron Absorber Sheet Thickness	0.00714 ± 0.00639 (k_{THK}) (U_{THK})	0.01992
Neutron Absorber Sheet Width	0.00000 ± 0.00000 (k_{WID}) (U_{WID})	0.0000
Moderator Density	0.00728 ± 0.00495 (k_{MOD}) (U_{MOD})	0.01718
Total Mechanical Uncertainty (2σ)→ (Combined by adding in quadrature)		0.04517 U_{MECH}
k_s →		0.919

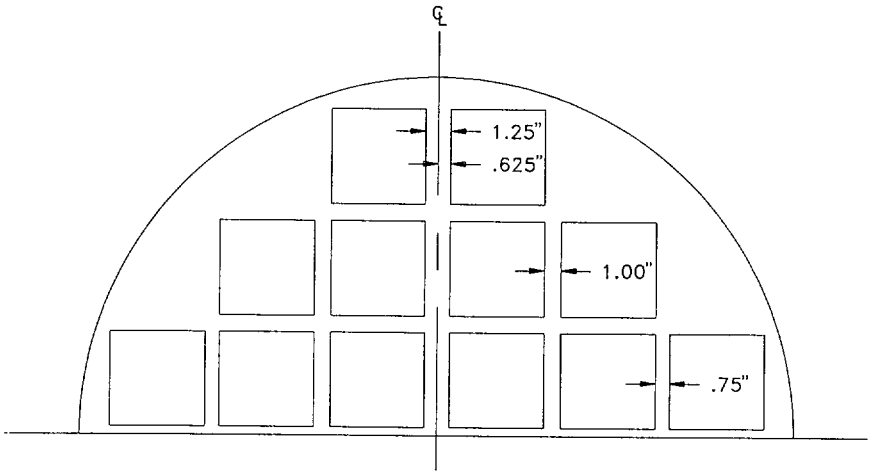

TOP VIEW OF HALF DSC WITH 24 FUEL GUIDE SLEEVES

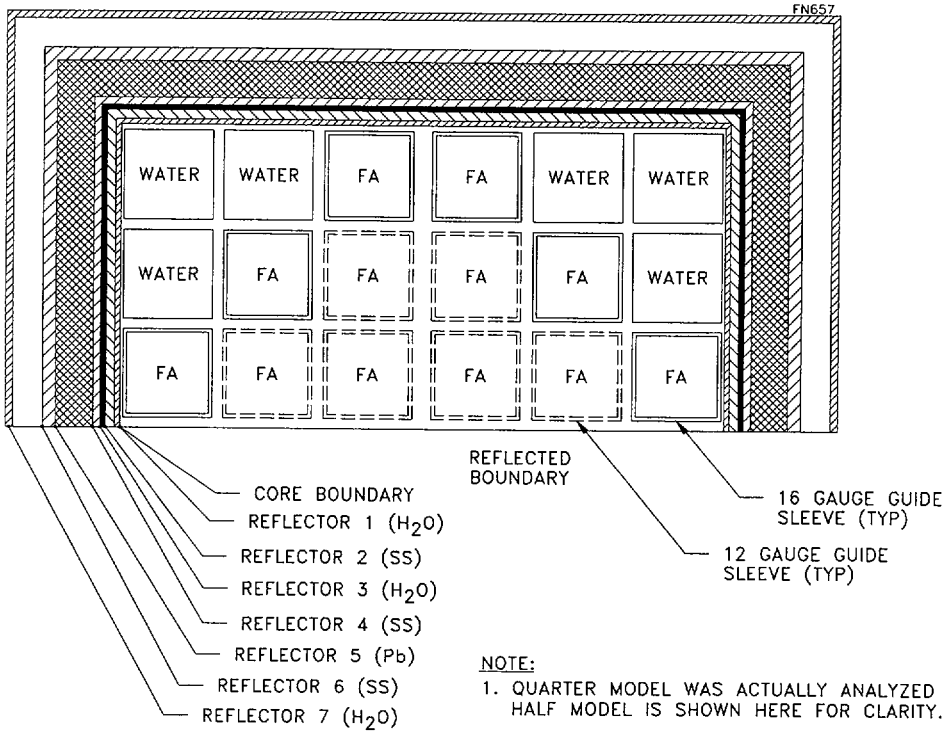

KENO MODEL OF HALF DSC AND TRANSFER CASK

Figure 3.3-1
NUHOMS®-24P DSC and KENO Model Geometry

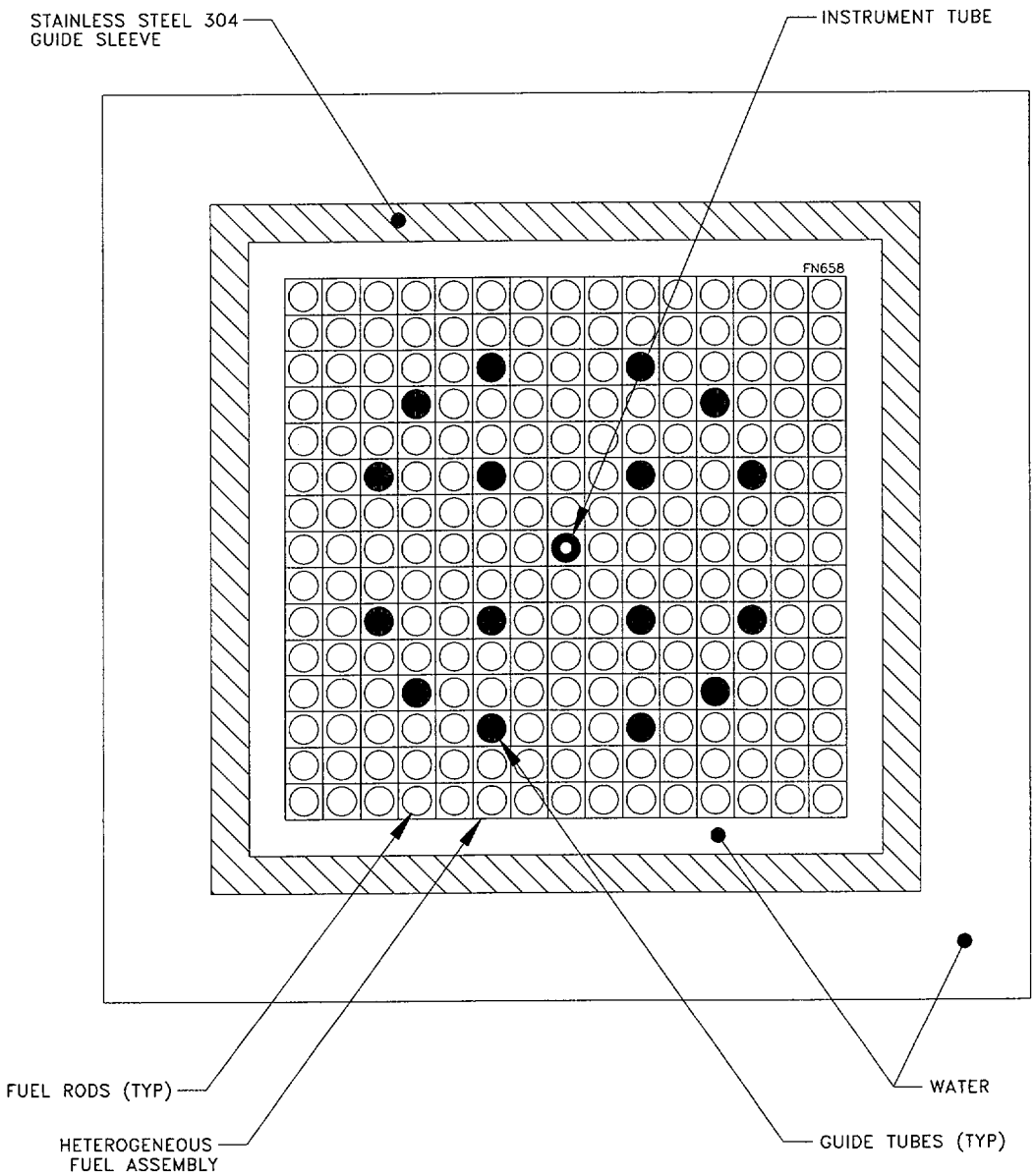

Figure 3.3-2
KENO Model for NUHOMS®-24P Fuel

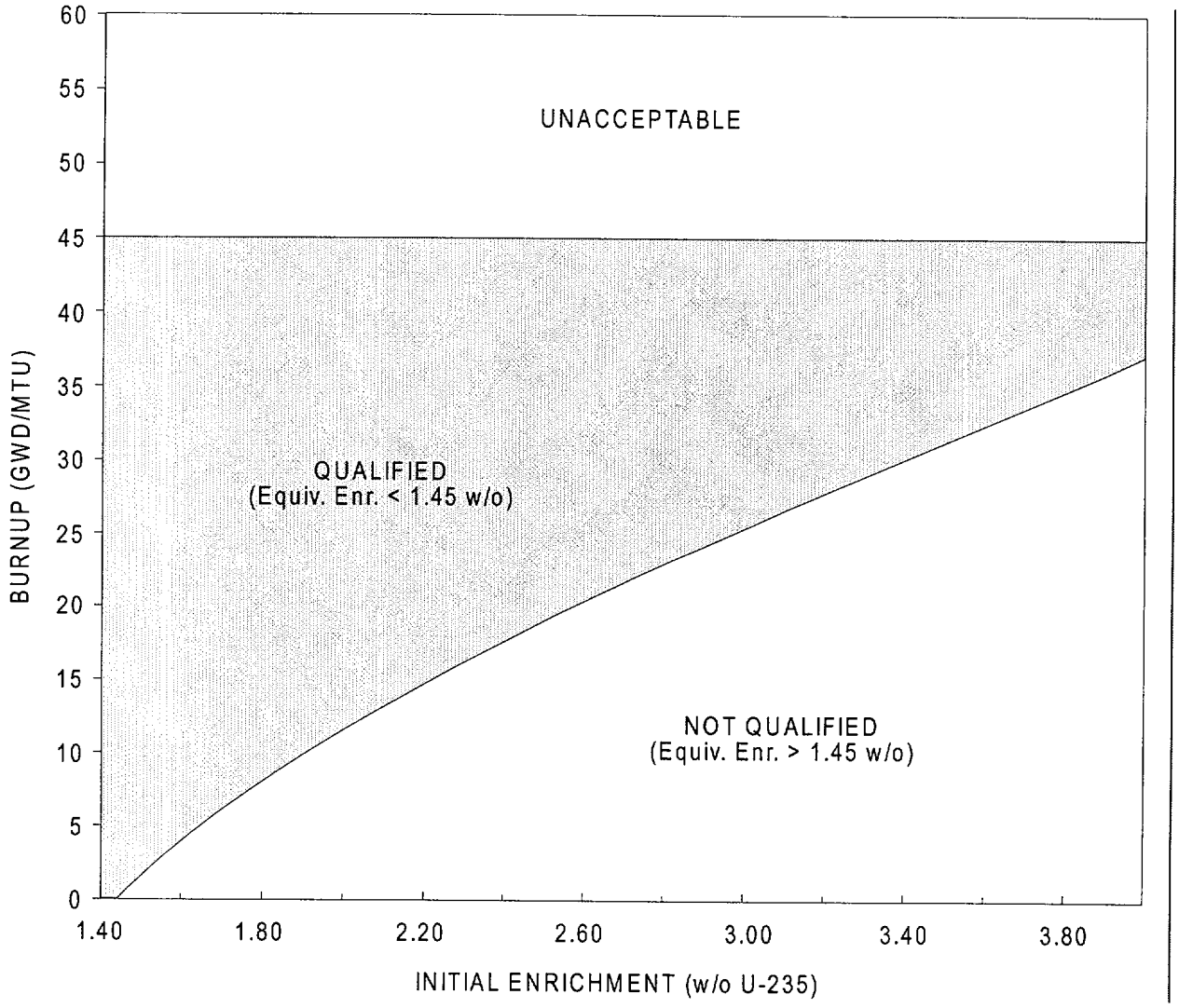

Figure 3.3-3
NUHOMS®-24P DSC Burnup Equivalence Curve

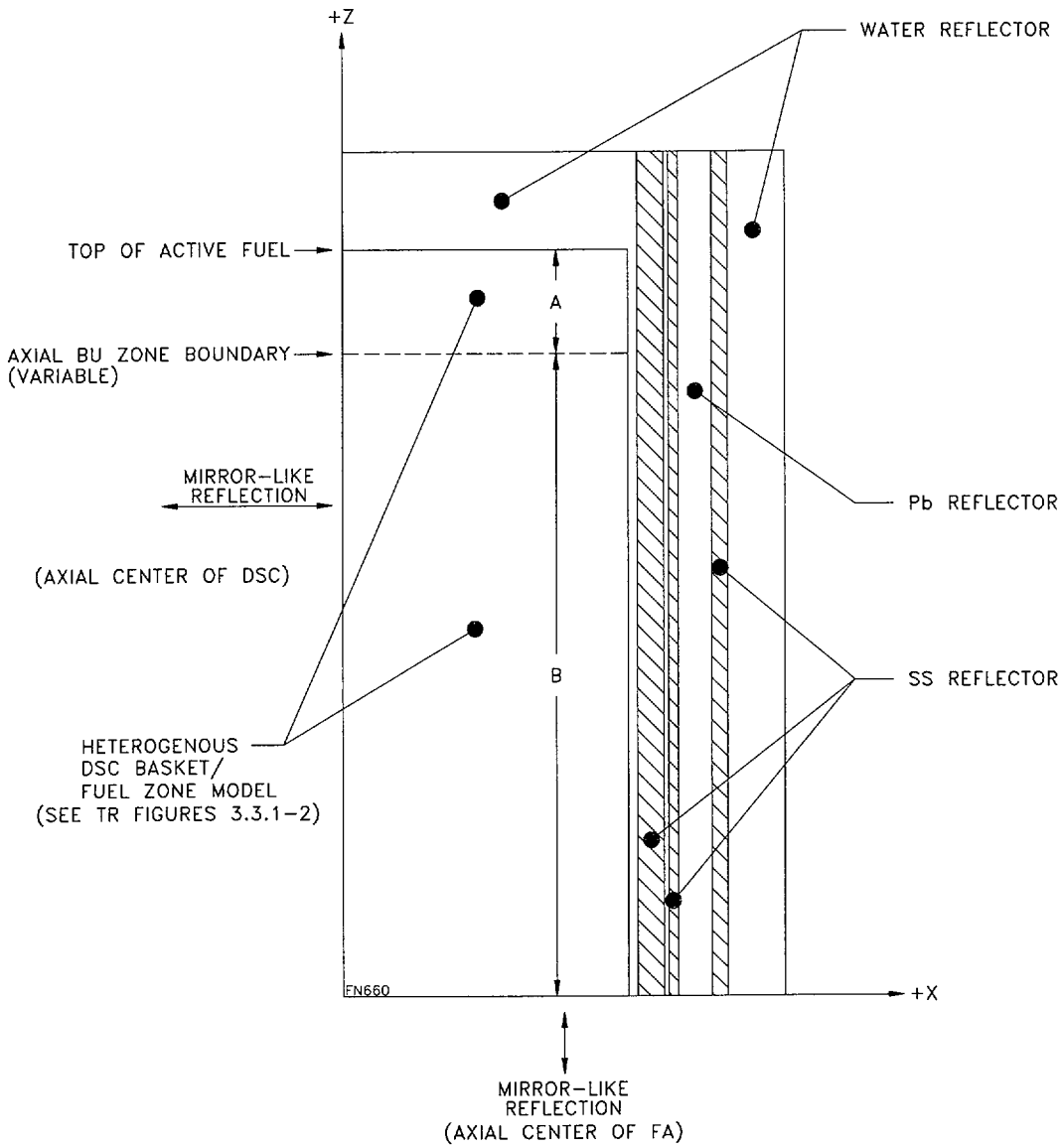

FUEL ZONE A: TOP FA/LOW BU ZONE (4.5" TO 24")
FUEL ZONE B: MID FA/AVG - HIGH BU ZONE (76.5" TO 48")

Figure 3.3-4
KENO Geometry of 1/8 NUHOMS®-24P DSC Array Model Used to Analyze Axial BU Variation Effects on Calculated Reactivity

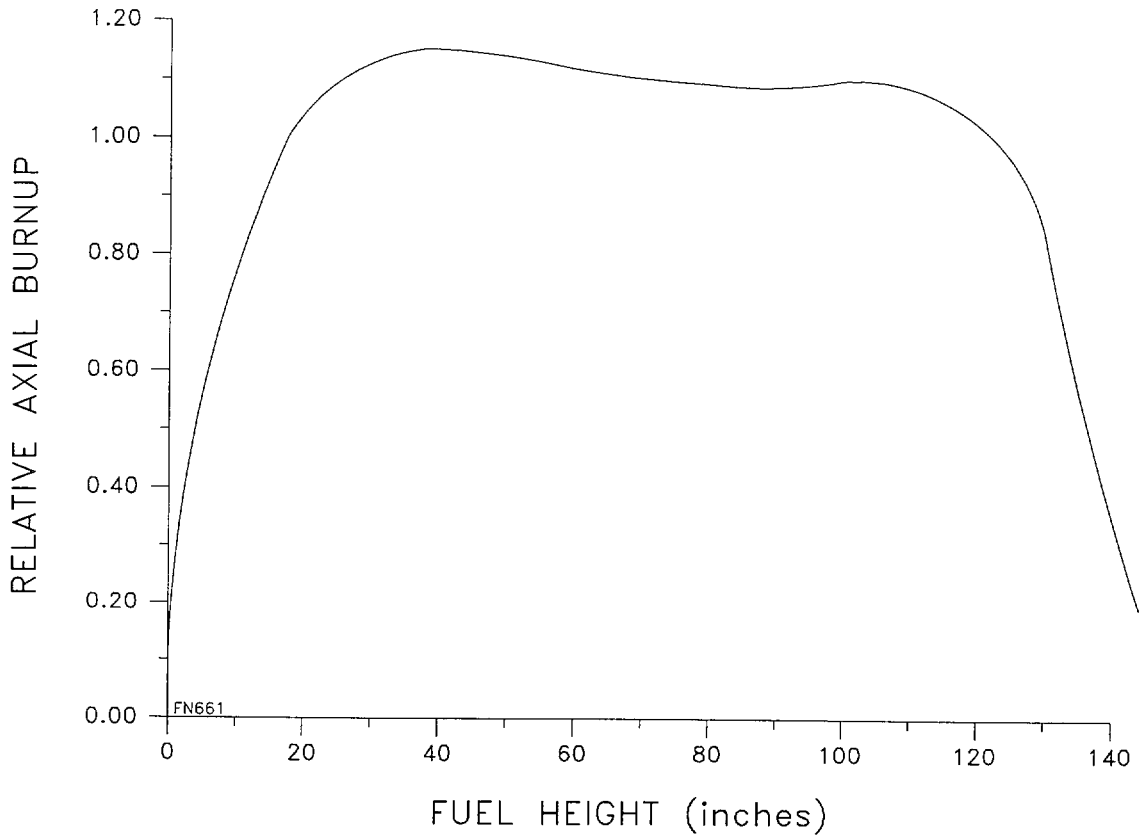

Figure 3.3-5
Relative Axial Burnup vs. Fuel Height Used in Axial BU Sensitivity Study NUHOMS®-24P DSC

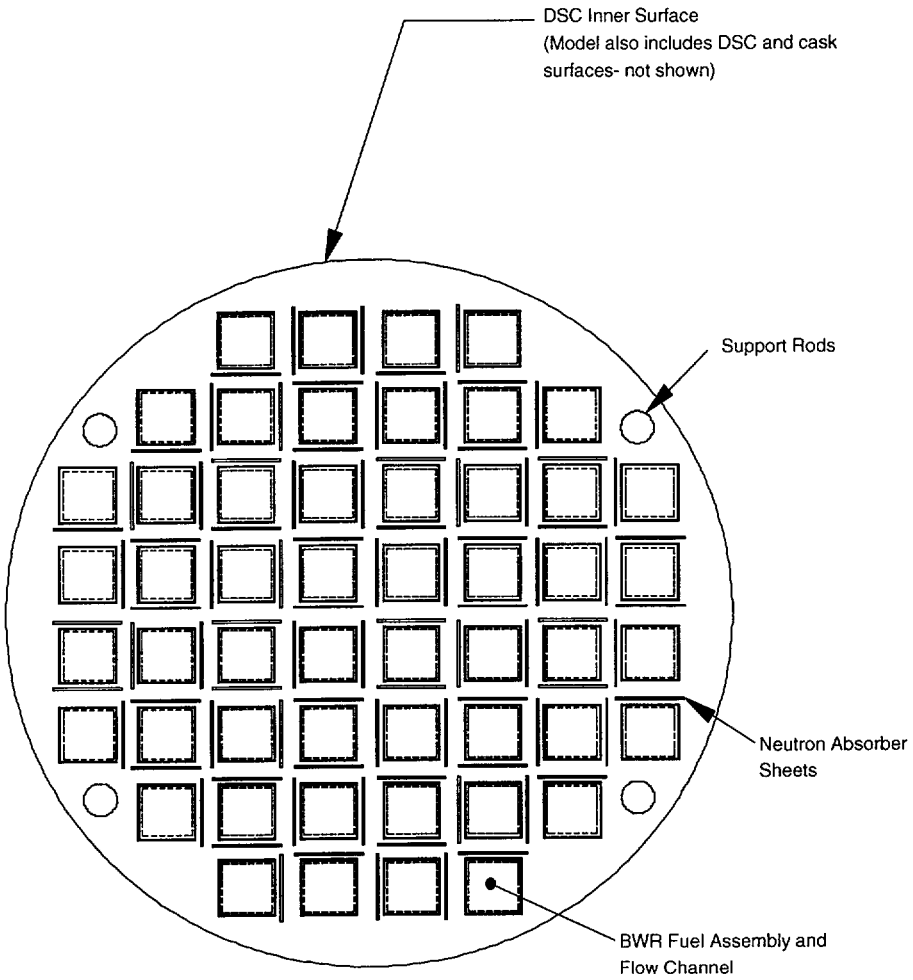

Figure 3.3-6
NUHOMS®-52B KENO Model General Arrangement (Internals)

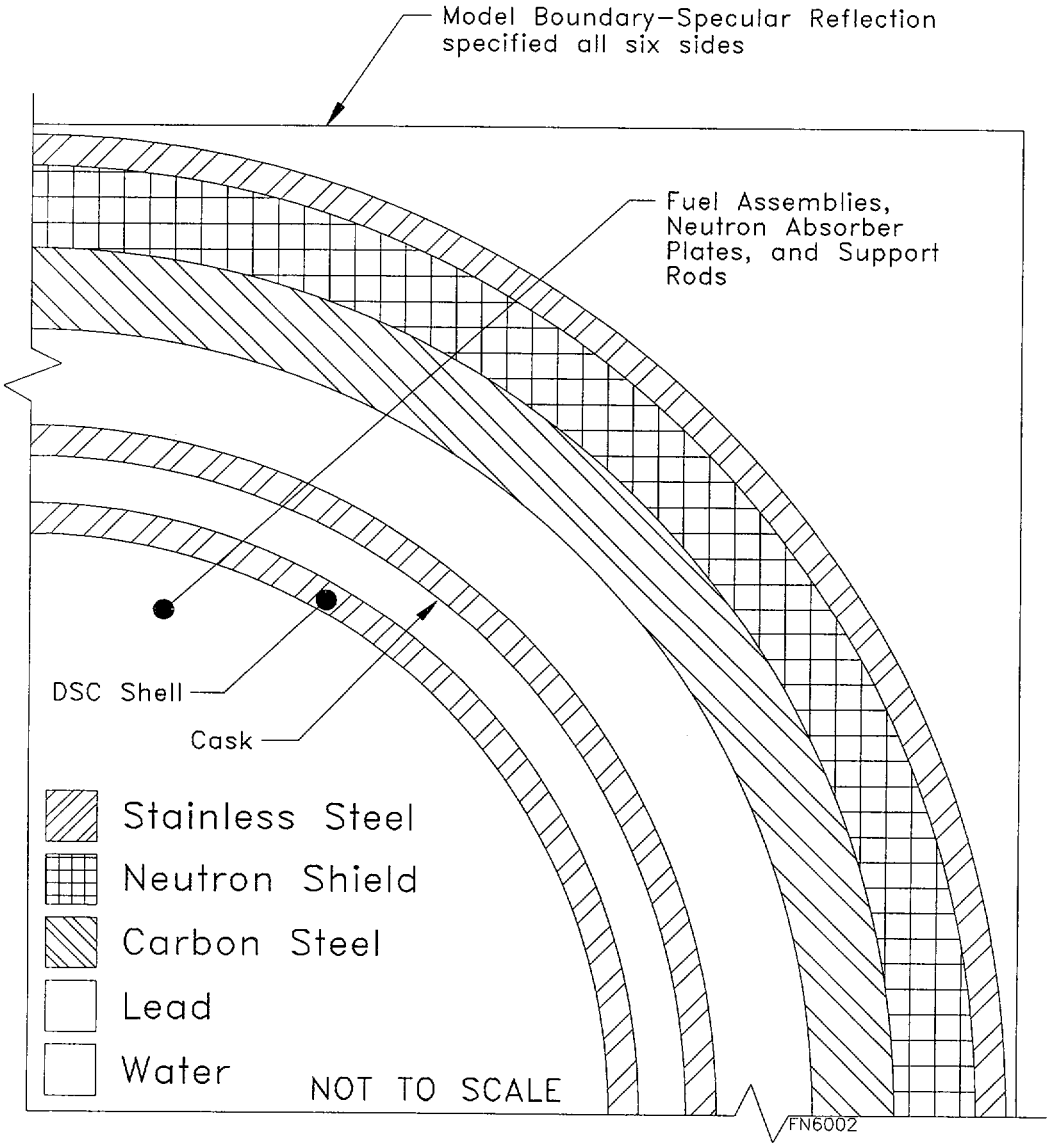

Figure 3.3-7
NUHOMS®-52B KENO Model Cask Arrangement

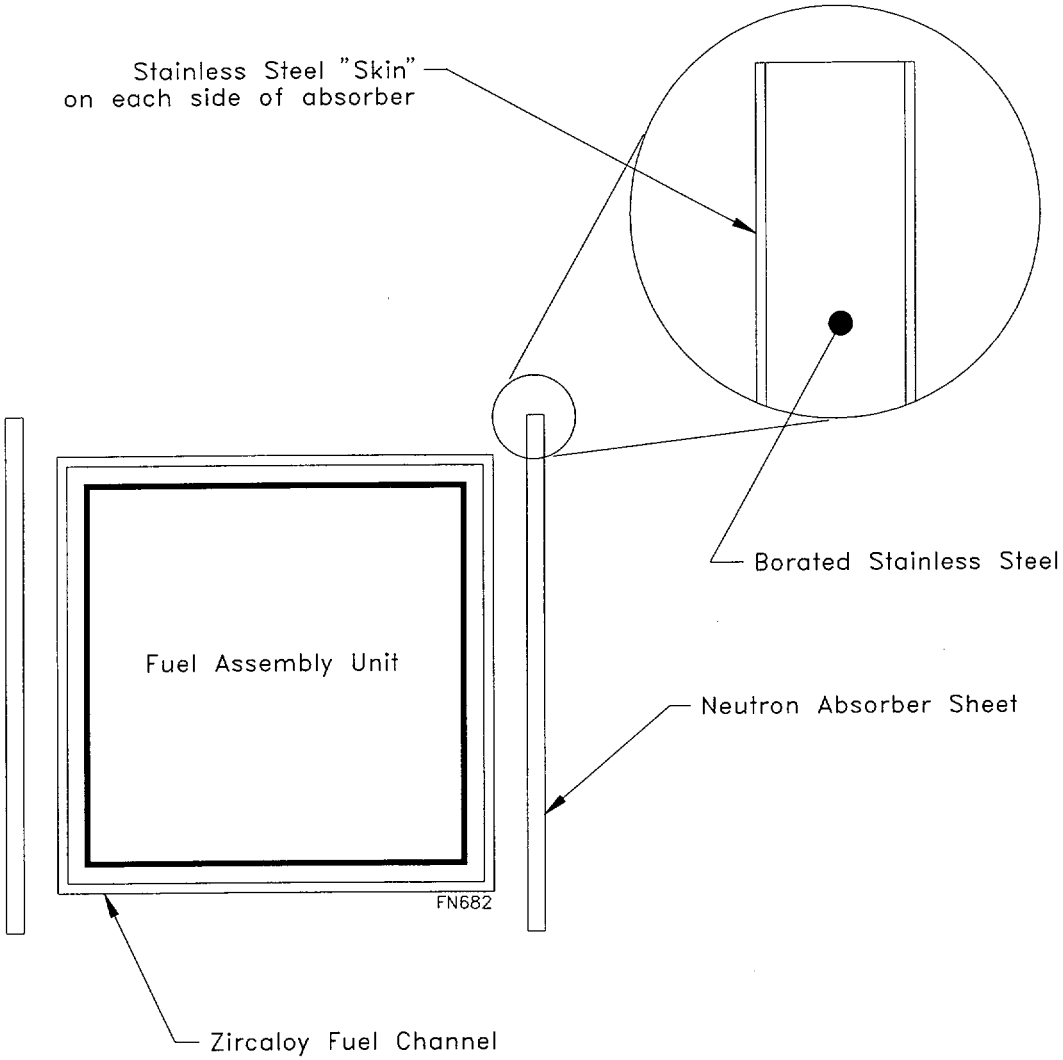

Figure 3.3-8
NUHOMS®-52B Typical Fuel Assembly Cell

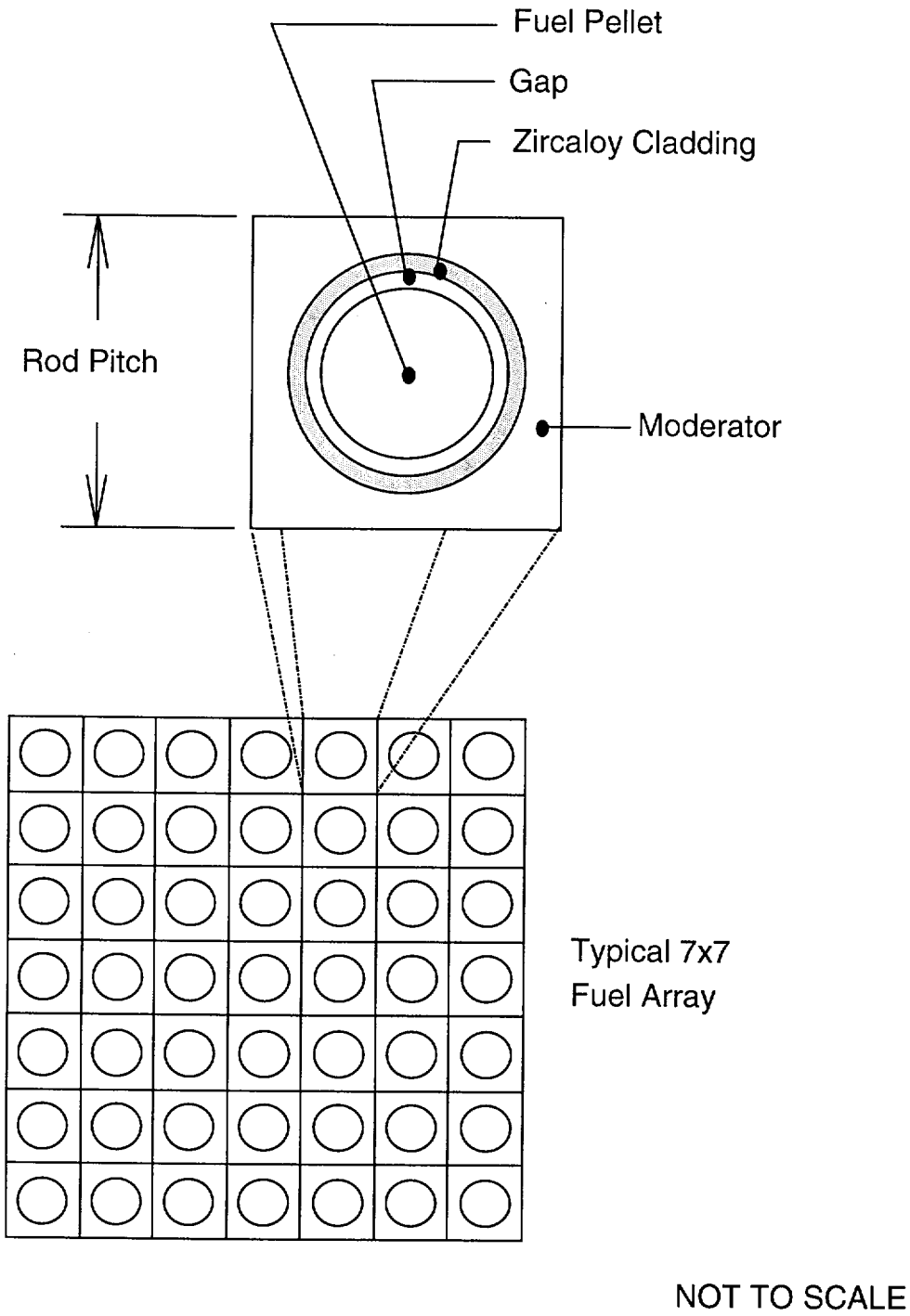

Figure 3.3-9
NUHOMS®-52B Typical Fuel Assembly Array (7x7)

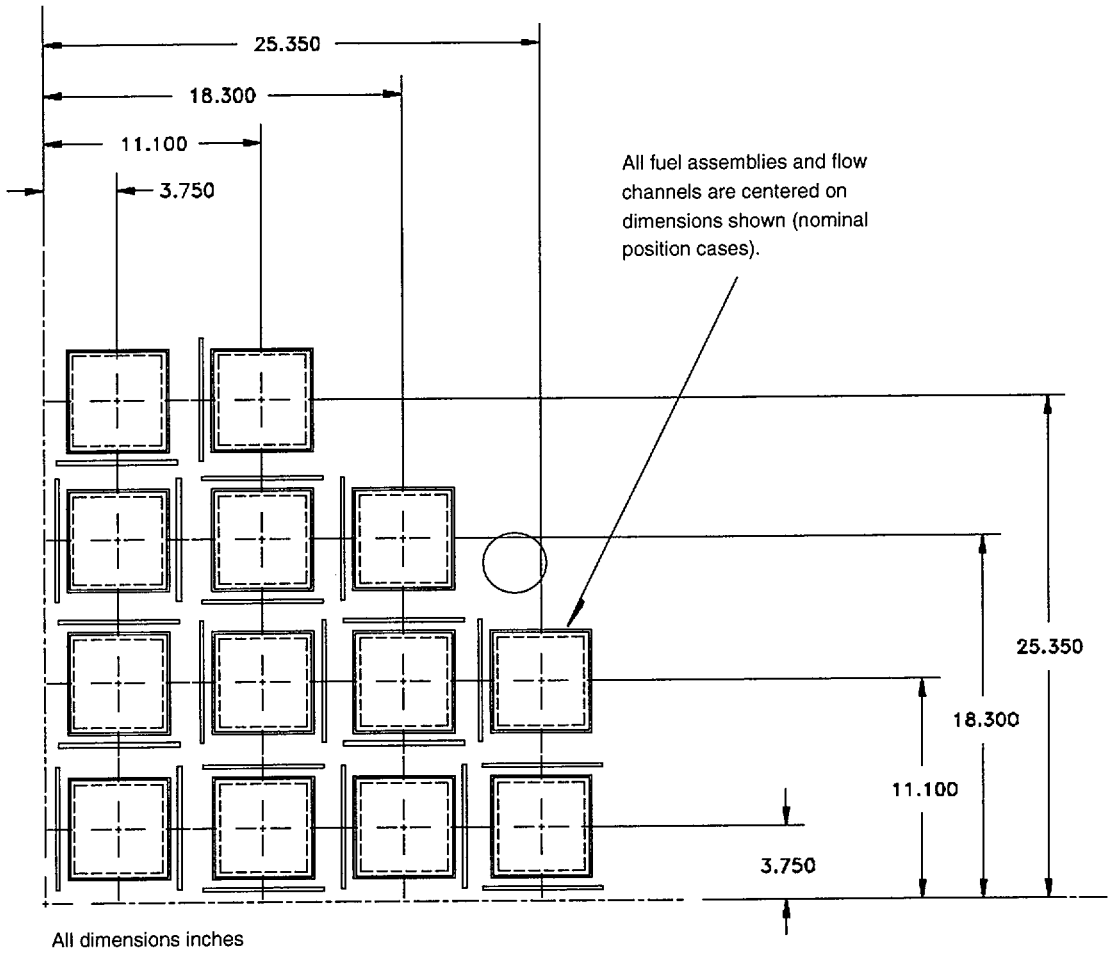

Figure 3.3-10
NUHOMS®-52B Location of Fuel Assemblies

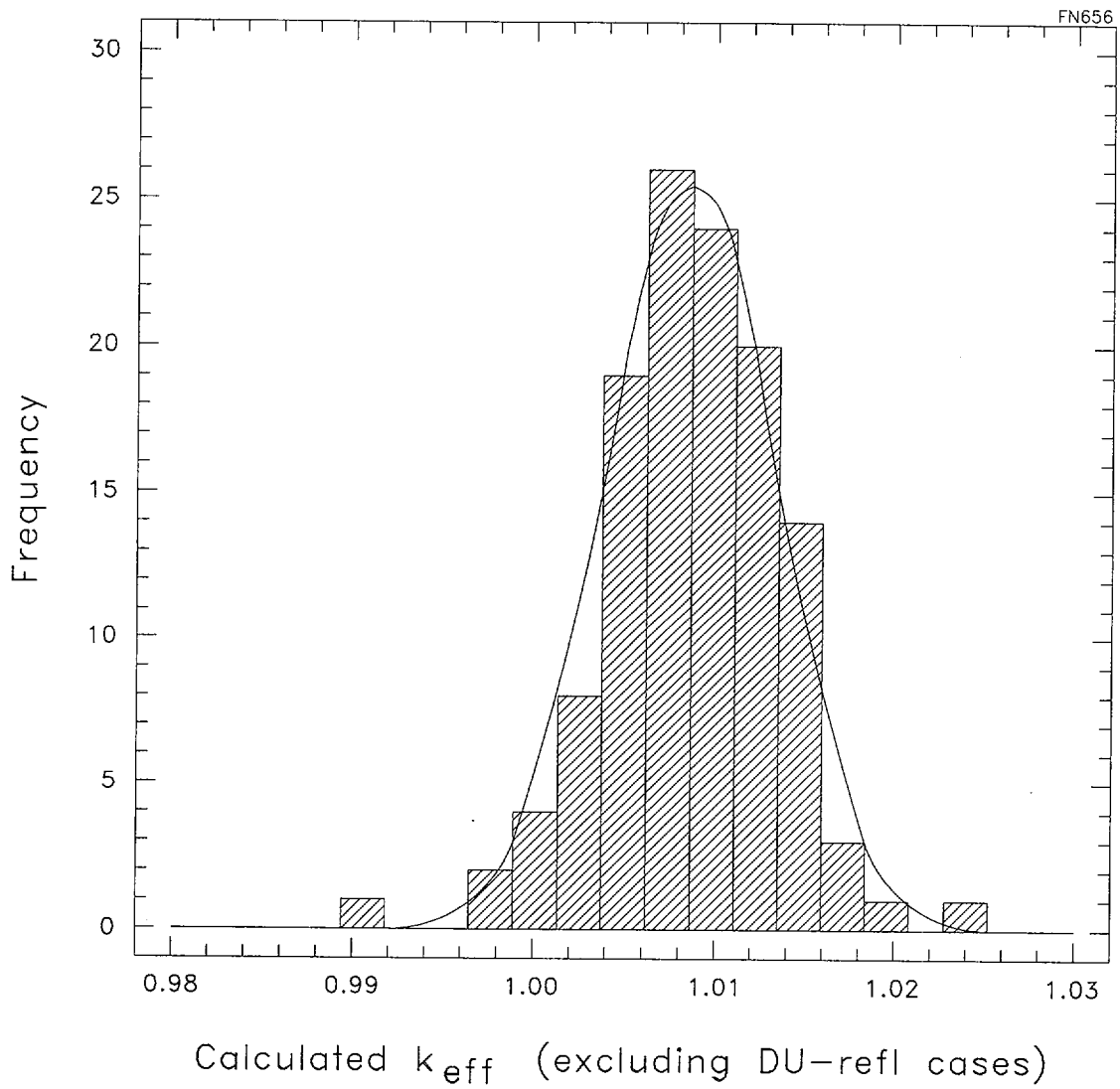

Figure 3.3-11
Histogram of keff Results for PNL Criticals

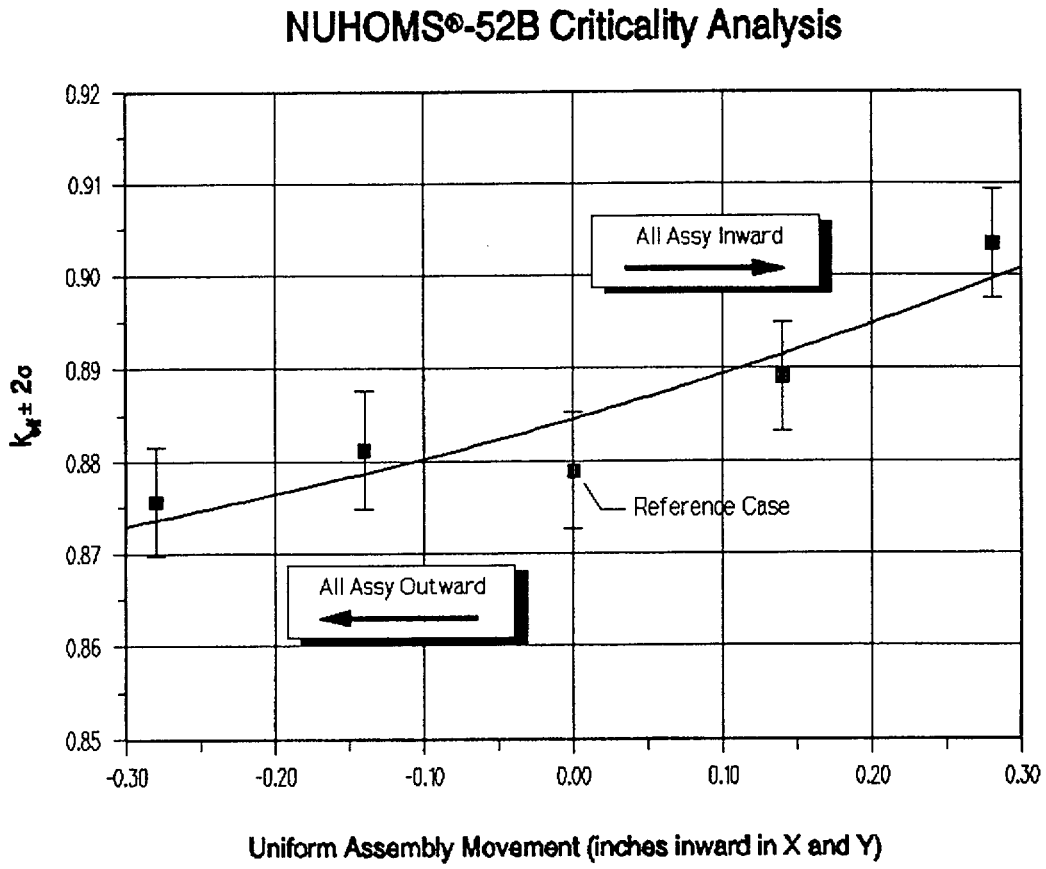

Figure 3.3-12
NUHOMS®-52B Fuel Assembly Position Sensitivity

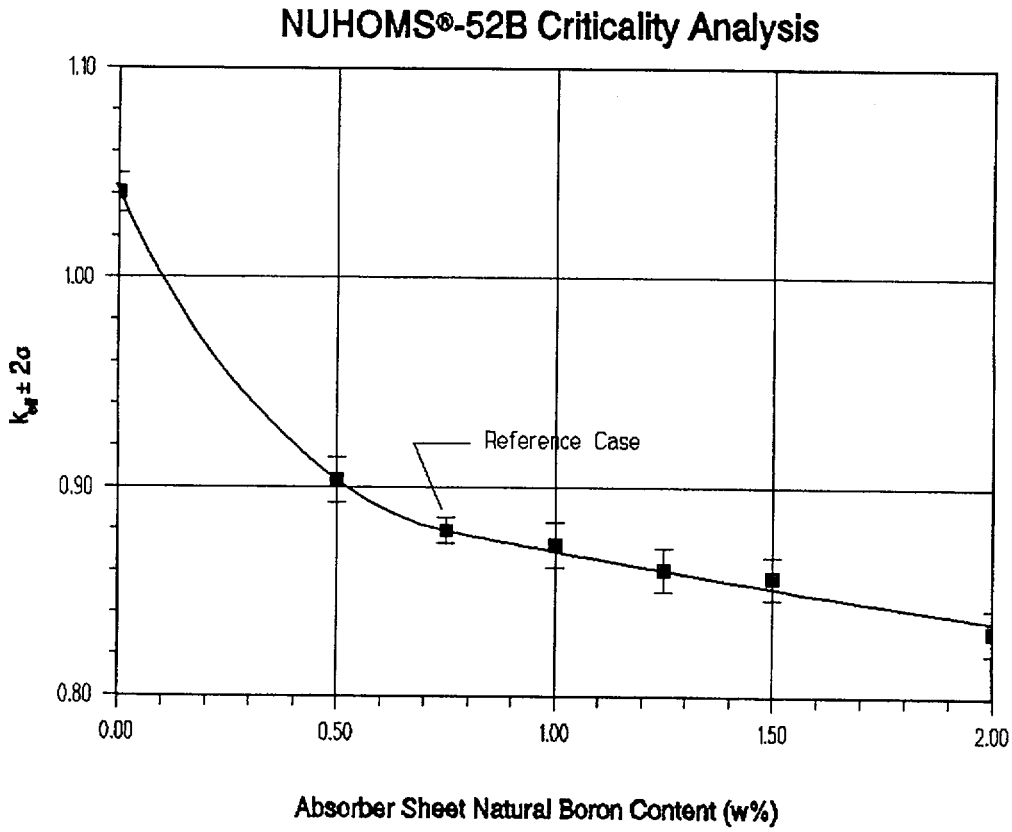

Figure 3.3-13
NUHOMS®-52B Neutron Absorber Boron Sensitivity Curve

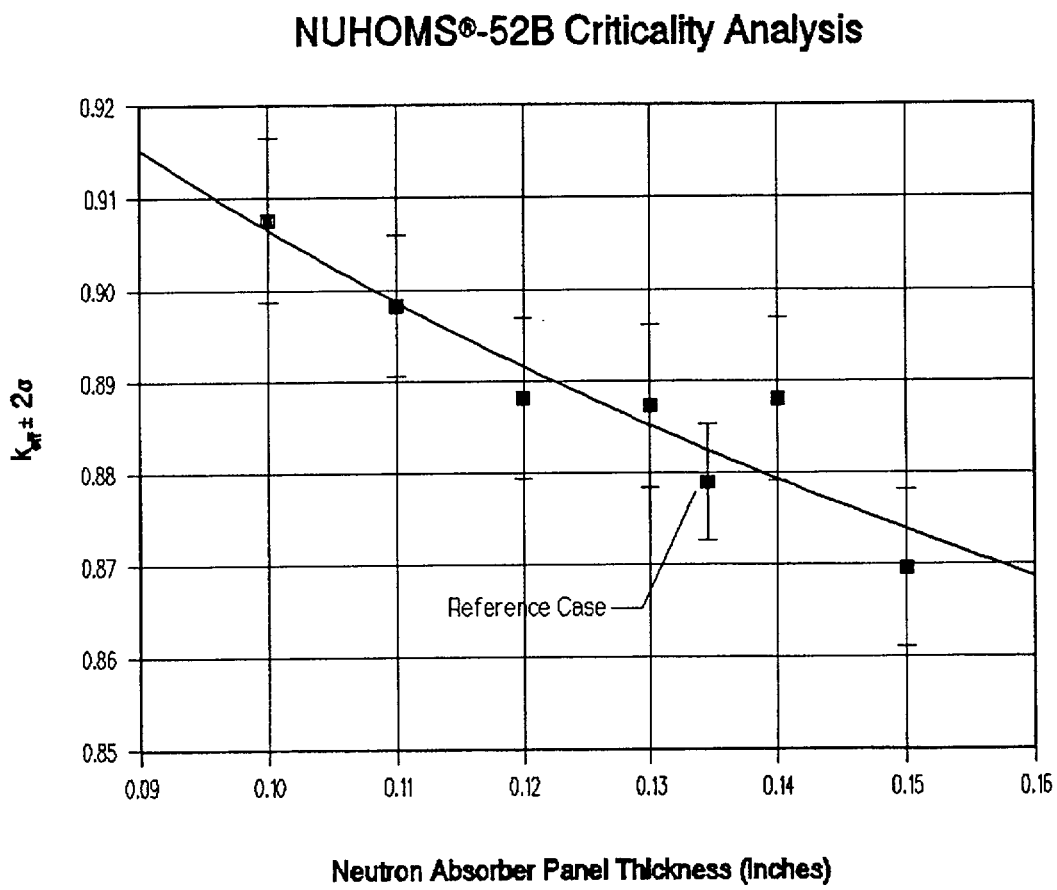

Figure 3.3-14
NUHOMS®-52B Absorber Sheet Thickness Sensitivity

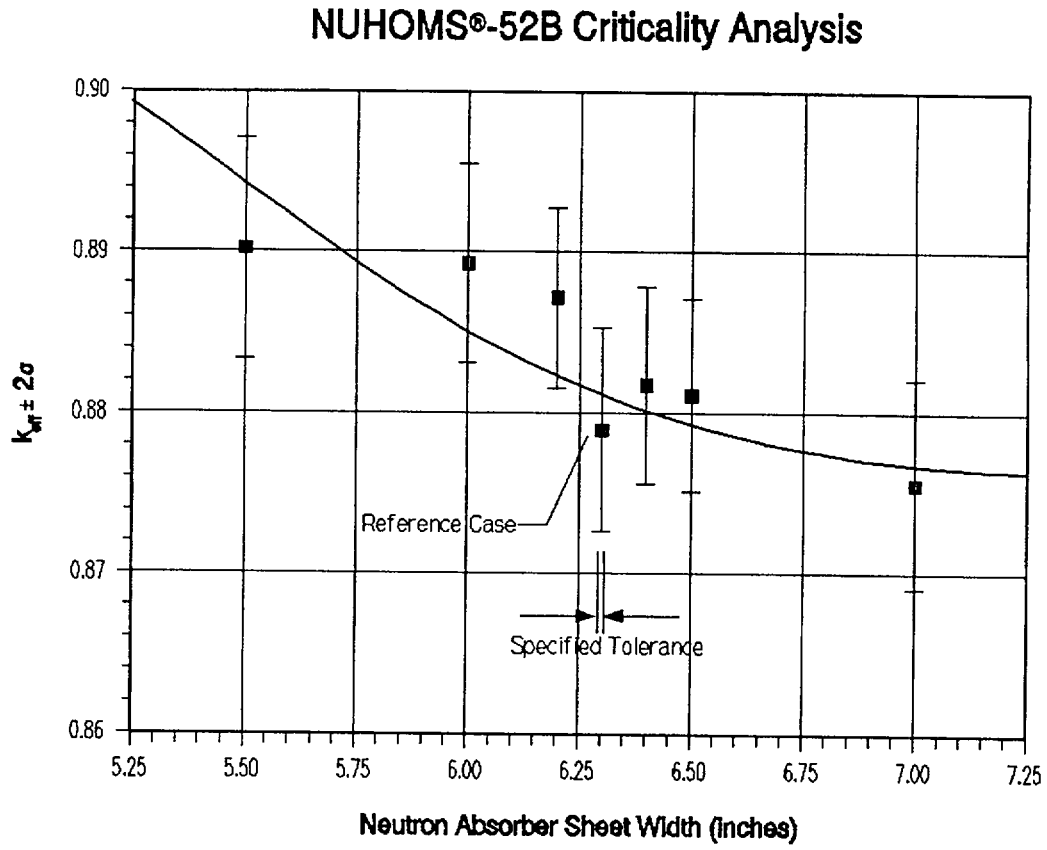

Figure 3.3-15
NUHOMS®-52B Neutron Absorber Width Sensitivity

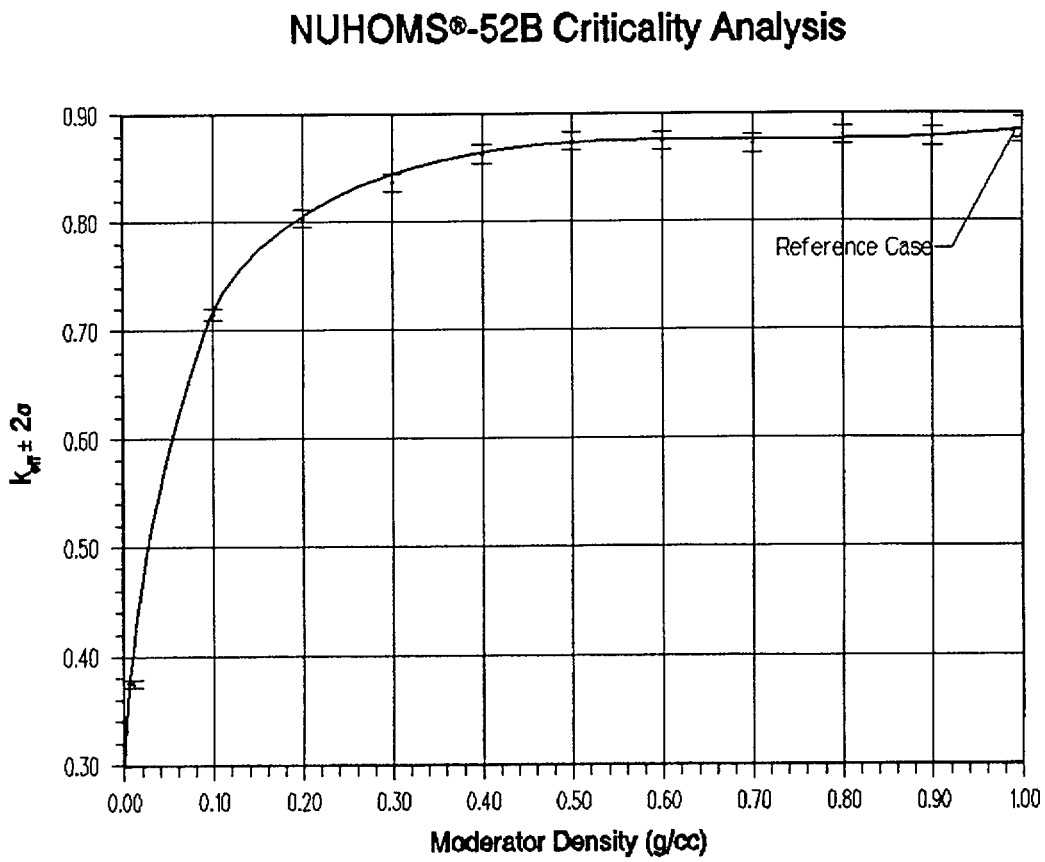

Figure 3.3-16
NUHOMS®-52B Moderator Density Sensitivity

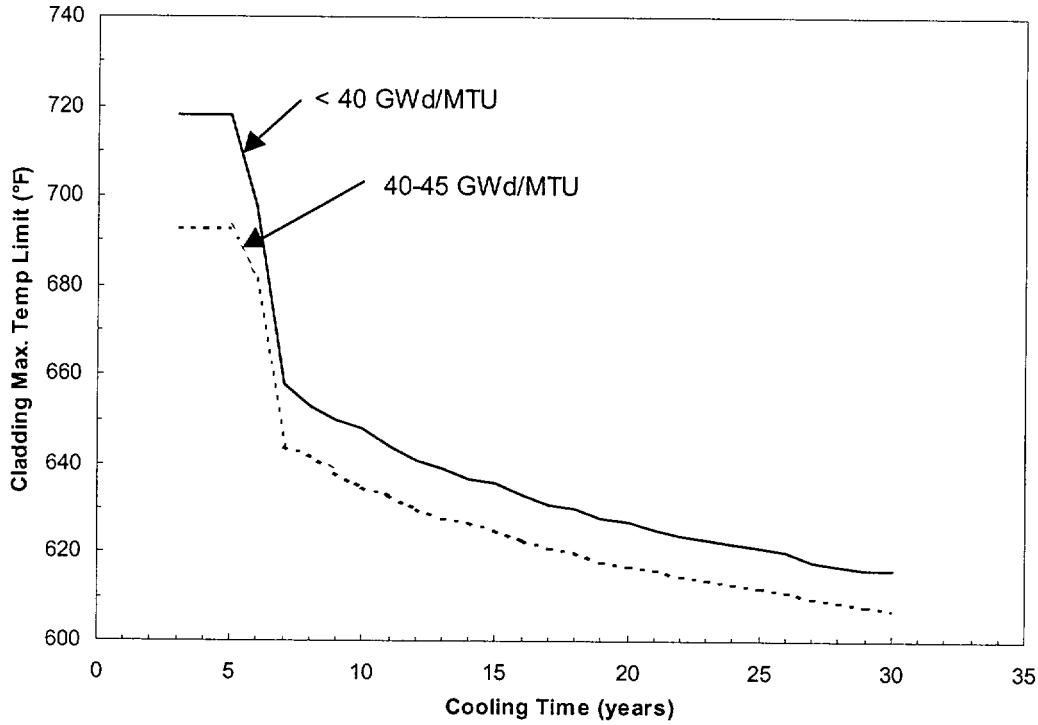

Figure 3.3-17
Maximum PWR Cladding Temperature Limit vs. Cooling Time

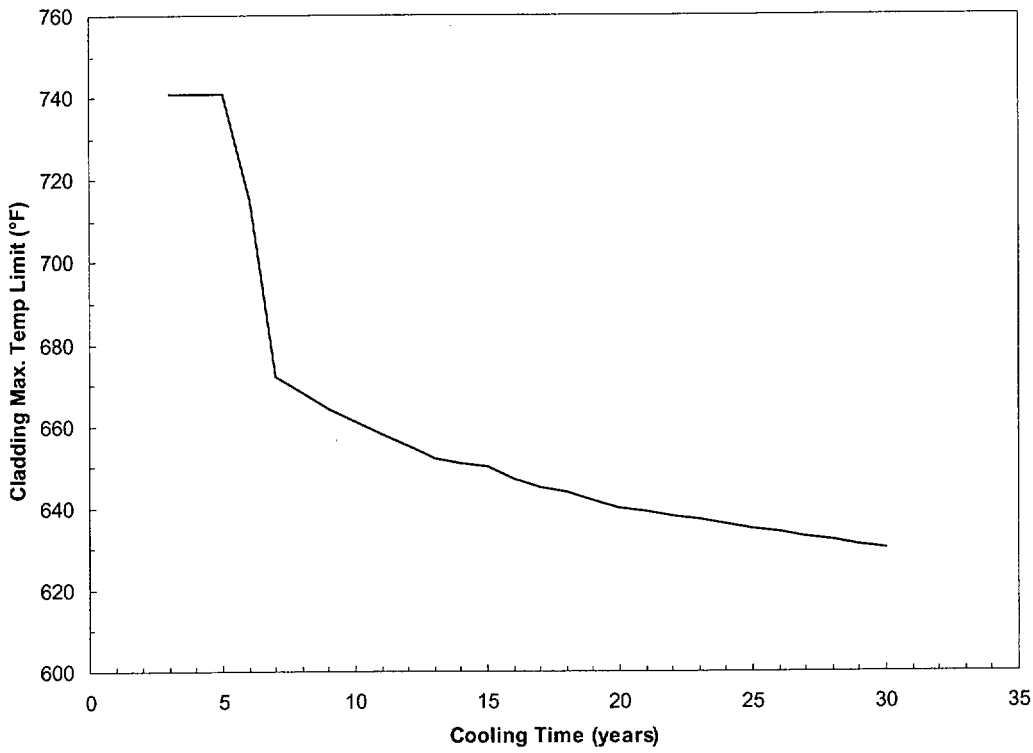

Figure 3.3-18
Maximum BWR Cladding Temperature Limit vs. Cooling Time

3.4 Classification of Structures, Components, and Systems

Table 3.4-1 provides a list of major NUHOMS® ISFSI components and their classification. Components are classified in accordance with the criteria of 10CFR72 (3.6). Structures, systems, and components classified as "important to safety" are defined in 10CFR72.3 as those features of the ISFSI whose function is:

A. To maintain the conditions required to store spent fuel safely.

B. To prevent damage to the spent fuel container during handling and storage.

C. To provide reasonable assurance that spent fuel can be received, handled, packaged, stored, and retrieved without undue risk to the health and safety of the public.

These criteria are applied to the NUHOMS® system components in determining their classification in the paragraphs which follow.

3.4.1 Dry Shielded Canister

The DSC is considered "important to safety" since it provides fuel assembly support required to maintain the assumed fuel geometry for criticality control. Accidental criticality inside a DSC could lead to off-site doses comparable with the limits in 10CFR100 which must be prevented. The DSC also provides the primary containment for radioactive materials. Therefore, the DSC is designed to remain intact under all accident conditions identified in Chapter 8 with no loss of function. The DSC is designed, constructed, and tested in accordance with "important to safety" requirements as defined by 10CFR72, Subpart G, paragraph 72.140(b) and described in Chapter 11. The welding materials required to make the closure welds on the DSC inner and outer top cover plates are purchased to the same ASME Code criteria as the DSC (Subsection NB, Class 1).

3.4.2 Horizontal Storage Module

The HSM is considered "important to safety" since it provides physical protection and shielding for the spent fuel container (DSC) during storage. The reinforced concrete HSM is designed in accordance with ACI 349-85 and the level of testing, inspection, and documentation provided during construction and maintenance is in accordance with the quality assurance requirements as defined in 10CFR72, Subpart G, paragraph 72.140(b) and as described in Chapter 11.

3.4.3 ISFSI Basemat and Approach Slabs

The ISFSI basemat and approach slabs are not considered "important to safety" and are designed, constructed, maintained, and tested as a commercial grade items.

Licensees are required to perform an assessment to confirm that the license seismic criteria are met and that the HSM foundation design meets the stated design code.

3.4.4 Transfer Equipment

3.4.4.1 Transfer Cask and Yoke

The on-site transfer cask is "important to safety" since it protects the spent fuel container (DSC) during handling and is part of the primary load path used while handling the DSC in the fuel/reactor building. An accidental drop of a loaded transfer cask has the potential for creating conditions in the plant which must be evaluated. Therefore the transfer cask is designed, constructed, and tested in accordance with "important to safety" requirements as defined by 10CFR72, Subpart G, paragraph 72.140(b) and described in Chapter 11.

The lifting yoke used for handling of the transfer cask within the fuel/reactor building is designed and procured as a "safety related" component as it is used by the licensee (utility) under the 10CFR50 (3.65) program. The lifting yoke is controlled by NUREG-0612 (3.66) and is designed to ANSI N14.6-1986 criteria for non-redundant yokes. Therefore, the lifting yoke is designed, constructed, and tested in accordance with "safety related" requirements as defined by 10CFR50, Appendix B and described in Chapter 11.

Due to site unique requirements, rigid or sling lifting members may be used to augment the lifting yoke. These members shall be designed, fabricated and tested in accordance with the same requirements as the cask lifting yoke.

3.4.4.2 Other Transfer Equipment

The NUHOMS® transfer equipment (i.e., ram, skid, trailer) are necessary for the successful loading of the DSC into the HSM. However, the analyses described in Chapter 8 demonstrate that the performance of these items is not required to provide reasonable assurance that spent fuel can be received, handled, packaged, stored, and retrieved without undue risk to the health and safety of the public. Therefore, these components are considered not "important to safety" and need not comply with the requirements of 10CFR72. These components are designed, constructed, and tested in accordance with good industry practices.

3.4.5 Auxiliary Equipment

The vacuum drying system and the automatic welding system are not "important to safety". Performance of these items is not required to provide reasonable assurance that spent fuel can be received, handled, packaged, stored, and retrieved without undue risk to the health and safety of the public. Failure of any part of these systems may result in delay of operations, but will not result in a hazard to the public or operating personnel. Therefore, these components need not comply with the requirements of 10CFR72. These components are designed, constructed, and tested in accordance with good industry practices.

Table 3.4-1
NUHOMS® Major Components and Safety Classification

Component	10CFR72 Classification
Dry Storage Canister (DSC) [4]	Important to Safety[1]
Guide Sleeves (24P only)	
Oversleeves (24P)	
Oversleeves (24PT2)	
Spacer Disks	
Support Rods	
Spacer Sleeves (52B only)	
Support Bars (52B only)	
Neutron Absorbing Plates (52B only)	
Shield Plugs [3]	
DSC Shell	
Cover Plates	
Grapple Ring and Grapple Support	
Siphon and Vent Block	
Siphon and Vent Port Cover Plates	
DSC Support Ring	
Weld Filler Metal	
Horizontal Storage Module (HSM)	Important to Safety[1]
Reinforced Concrete	
DSC Support Structure	
ISFSI Basemat and Approach Slabs	Not Important to Safety
Transfer Equipment	
On-site Transfer Cask	Important to Safety[1]
Cask Lifting Yoke	Safety Related[2]
Transport Trailer/Skid	Not Important to Safety
Ram Assembly	Not Important to Safety
Dry Film Lubricant	Not Important to Safety
Auxiliary Equipment	Not Important to Safety
Vacuum Drying System	
Automatic Welding System	

(1) Structures, systems and components "important to safety" are defined in 10CFR72.3 as those features of the ISFSI whose function is (1) to maintain the conditions required to store spent fuel safely, (2) to prevent damage to the spent fuel container during handling and storage, or (3) to provide reasonable assurance that spent fuel can be received, handled, packaged, stored, and retrieved without undue risk to the health and safety of the public.

(2) Yoke and rigid or sling lifting members are classified as "Safety Related" in accordance with 10CFR50.

(3) For 24P Long Cavity and 24PT2L DSC.

(4) See Appendix K for the NUHOMS®-61BT DSC components and safety classification.

3.5 Decommissioning Considerations

The DSC is designed to interface with a transportation system for the eventual off-site transport of intact canisters by the DOE to either a monitored retrievable storage facility (MRS) or a permanent geologic repository, as discussed in Section 9.6. Decommissioning of the NUHOMS® ISFSI will be performed in a manner consistent with the decommissioning of the plant itself since all NUHOMS® system components are constructed of materials similar to those found in existing plants.

If the fuel is to be removed from the DSC at the plant prior to shipment, the DSC will likely be contaminated internally by crud from the spent fuel and may be slightly activated by spontaneous neutron emissions from the spent fuel. The DSC internals may be cleaned to remove surface contamination and the DSC disposed of as low-level waste. Alternatively, if the contamination and activation levels of the DSC are small enough (to be determined on a case-by-case basis), it may be possible to decontaminate the DSC and dispose of it as commercial scrap pending NRC rulings on below regulatory concern (BRC) waste disposal issues.

While the intent for the NUHOMS® system includes the eventual disposal of each DSC following fuel removal, current closure weld designs do not preclude future development of a non-destructive closure removal technique that allows for reuse of the DSC shell/basket assembly. Economic and technical conditions existing at the time of fuel removal would be assessed prior to making a decision to reuse the DSC.

The exact decommissioning plan for the ISFSI will be dependent on the DOE's fuel transportation system capability and requirements for a specific plant. Because of the minimal contamination of the outer surface of the DSC, no contamination is expected on the internal passages of the HSM. It is anticipated that the prefabricated HSMs can be dismantled and disposed of using commercial demolition and disposal techniques. Alternatively, the HSMs may be refurbished and reused at another site or at the MRS for storage of intact NUHOMS® DSCs transported from the plant.

3.6 References

3.1 Deleted.

3.2 J. C. Ryman, O. W. Herman, C. C. Webster, C. V. Parks, "Fuel Inventory and Afterheat Power Studies of Uranium-Fuel Pressurized Water Reactor Fuel Assemblies Using the SAS2 and ORIGEN-S Modules of SCALE with an ENDF/B-V Updated Cross-Section Library," NUREG/CR-2397 (ORNL-CSD-90), U.S. Nuclear Regulatory Commission and Oak Ridge National Laboratory, (1980).

3.3 Deleted

3.4 Deleted

3.5 Deleted

3.6 U.S. Government, "Licensing Requirements for the Storage of Spent Fuel in an Independent Spent Fuel Storage Installation (ISFSI)", Title 10 Code of Federal Regulations, Part 72, Office of the Federal Register, Washington, D.C.

3.7 U.S. Atomic Energy Commission," Design Basis Tornado for Nuclear Power Plants," Regulatory Guide 1.76 (1974).

3.8 U.S. Nuclear Regulatory Commission, "Missiles Generated by Natural Phenomena," Standard Review Plan NUREG-0800, 3.5.1.4 (Formerly NUREG-76/087), Revision 2 (1981).

3.9 American National Standard, "Building Code Requirements for Minimum Design Loads in Buildings and Other Structures," ANSI/A58.1-1982, American National Standards Institute, Inc. New York, New York (1982).

3.10 Deleted.

3.11 U.S. Atomic Energy Commission, "Design Response Spectra for Seismic Design of Nuclear Power Plants," Regulatory Guide 1.60, Revision 1 (1973).

3.12 U.S. Atomic Energy Commission, " Damping Values for Seismic Design of Nuclear Power Plants," Regulatory Guide 1.61 (1973).

3.13 American Concrete Institute, Code Requirements for Nuclear Safety Related Concrete Structures and Commentary, ACI 349-85 and ACI 349R-85, American Concrete Institute, Detroit, Michigan (1985).

3.14 American Society of Mechanical Engineers, ASME Boiler and Pressure Vessel Code, Section III, Division 1, 1983 Edition with Winter 1985 Addenda.

3.15 Deleted.

3.16 Deleted.

3.17 Deleted.

3.18 Deleted.

3.19 M. N. Baldwin, et al., Critical Experiments Supporting Close Proximity Water Storage of Power Reactor Fuel, BAW-1484-7, Babcock & Wilcox, Lynchburg, Virginia, July 1979.

3.20 A. B. Johnson, Jr. and E. R. Gilbert, "Technical Basis for Storage of Zircaloy - Clad Spent Fuel in Inert Gases" PNL-4835, Pacific Northwest Laboratory (1983).

3.21 Levy, I. S., et al. 1987. Recommended Temperature Limits for Dry Storage of Spent Light Water Reactor Zircaloy-Clad Fuel Rods in Inert Gas, May 1987, PNL-6189 (UC-85), Pacific Northwest Laboratory, Richland, Washington.

3.22 U.S. Government "Packaging of Radioactive Material for Transport and Transportation of Radioactive Material Under Certain Conditions," Title 10 Code of Federal Regulations, Part 71, Office of the Federal Register, Washington, D.C.

3.23 Deleted.

3.24 Deleted.

3.25 U.S. Nuclear Regulatory Commission, "Barrier Design Procedures", Standard Review Plan NUREG-0800, 3.5.3 (Formerly NUREG-75/087), Revision 1, (July 1981).

3.26 Deleted.

3.27 Deleted.

3.28 General Electric Co., "IF-300 Consolidated Safety Analysis Report," NEDO-10048-2. General Electric Co., Nuclear Fuel and Special Projects Divisions, San Jose, CA (1983).

3.29 Westinghouse Electric Corp., "Topical Safety Analysis Report for the Westinghouse MC-10 cask for an Independent Spent Fuel Storage Installation, WCAP-10741, Westinghouse Electric Corp., Nuclear Component Division, Pensacola, FL (1984).

3.30 Combustion Engineering Inc., "Dry Storage Cask for an Independent Spent Fuel Storage Installation," CENPD-270, Combustion Engineering, Power Systems, Windsor, CN (1982).

3.31 Nuclear Assurance Corp., "Safety Analysis Report Supplement for Consolidated Fuel Rod Storage at an Independent Spent Fuel Storage Installation," DOE/ET/47912-4, U.S. Department of Energy, Washington, DC (1981).

3.32 Deleted.

3.33 American Society for Metals, Metals Handbook, ASM, Novelty, OH (1960).

3.34 Deleted.

3.35 Deleted.

3.36 American National Standard, "Design Criteria for an Independent Spent Fuel Storage Installation (Dry Storage Type)," ANSI/ANS 57.9-1984, American Nuclear Society, La Grange Park, Illinois (1984).

3.37 American National Standard, "For Radioactive Materials - Special Lifting Devices for Shipping Containers Weighing 10,000 Pounds (4500 Kg) or More," ANSI N14.6-1986, American National Standards Institute, Inc., New York, New York (1993).

3.38 Malte Edenius, et. al., "CASMO-2 - A Fuel Assembly Burnup Program," STUDSVIK/NR-81/3, March 1981.

3.39 "Duke Power Company Oconee Nuclear Station Reload Design Methodology II," October 1985, DPC-NE-1002A.

3.40 T. L. Sanders, et. al., "Feasibility and Incentives for the Consideration of Spent Fuel Operating Histories in the Criticality Analysis of Spent Fuel Shipping Casks," SAND87-0151, August 1987.

3.41 (See Reference 3.58)

3.42 R. I. Smith and G. J. Konzak, "Clean Critical Experiment Benchmarks for Plutonium Recycle in LWRs," EPRI NP-196, April, 1976.

3.43 "Oconee Generic NODE and PDQ Setup from CASMO-2," OSC-2270, Duke Power Company Design Engineering, Revisions 0-2, 1986.

3.44 (See Reference 3.53)

3.45 American Institute of Steel Construction, (AISC), "Specification for Structural Steel Buildings," Ninth Edition, 1990, Chicago, Illinois.

3.46 American National Standard, "Design Requirements for Light Water Reactor Spent Fuel Storage Facilities at Nuclear Power Plants," ANSI/ANS 57.2-1983, American National Standards Institute, Inc., New York, New York (1983).

3.47 American National Standard, "Criticality Safety Criteria for the Handling, Storage, and Transportation of LWR Fuel Outside Reactors," ANSI/ANS 8.17-1984, American National Standards Institute, Inc., New York, New York (1984).

3.48 M. Edenius, E. Hellstand, E. Johansson, "CASMO Benchmark Report," RF-78/6293, Studsvik (March 1978).

3.49 M. Edenius, K. Ekberg, E. Pilat, D. VerPlanct, "CASMO Benchmarking Against Critical Experiments in Rack Geometries," NR-81/61, Studsvik (Nov. 1981).

3.50 Bechtel Topical Report, "Design of Structures for Missile Impact," BC-TOP-9-A, Rev. 2, September 1974.

3.51 U. S. Nuclear Regulatory Commission, Office of Nuclear Materials Safety and Safeguards, "Safety Evaluation Report Related to the Topical Report for the Nutech Horizontal Modular Storage System for Irradiated Nuclear Fuel NUHOMS®-24P Submitted by Nutech Engineers, Inc.," NUH-002, Revision 1A, April 1989.

3.52 "KENO5A-PC, Monte Carlo Criticality Program with Supergrouping," CCC-548, Oak Ridge National Laboratory, June, 1990.

3.53 "SCALE-3: A Modular Code System for Performing Standardized Computer Analyses for Licensing Evaluation," Oak Ridge National Laboratory, NUREG/CR-0200 (ORNL/NUREG/CSD-2) Vols. I, II, and III, December, 1984.

3.54 Thomas, B.D., "QA Category 2 Computer Code Verification Document - KENO5A, TN West Version 1.2.0," Revision 0.

3.55 Bierman, S.R., et al., "Criticality Experiments with Subcritical Clusters of 2.35 Wt% and 4.31 Wt% ^{235}U Enriched UO_2 Rods in Water With Steel Reflecting Walls," Battelle Pacific Northwest Laboratories, NUREG/CR-1784, April, 1981.

3.56 Bierman, S.R., et al., "Critical Separation Between Subcritical Clusters of 4.29 Wt% ^{235}U Enriched UO_2 Rods in Water With Fixed Neutron Poisons," Battelle Pacific Northwest Laboratories, NUREG/CR-0073, May 1978.

3.57 Bierman, S.R., et al., "Criticality Experiments with Subcritical Clusters of 2.35 Wt% and 4.31 Wt% ^{235}U Enriched UO_2 Rods in Water With Uranium or Lead Reflecting Walls," Battelle Pacific Northwest Laboratories, NUREG/CR-0796, August, 1981.

3.58 Bierman, S.R., et al., "Critical Separation Between Subcritical Clusters of 2.35 Wt% ^{235}U Enriched UO_2 Rods in Water with Fixed Neutron Poisons," Battelle Pacific Northwest Laboratories, PNL-2438, October, 1977.

3.59 Baldwin, M.N., et al., "Critical Experiments Supporting Close Proximity Water Storage of Power Reactor Fuel," BAW-1484-7, Babcock & Wilcox Company, Lynchburg, Virginia, July, 1979.

3.60 Bierman, S.R., "Reactivity Measurements on an Experimental Assembly of 4.31 Wt% ^{235}U Enriched UO_2 Fuel Rods Arranged in a Shipping Cask Geometry," Battelle Pacific Northwest Laboratories, PNL-6838, October, 1989.

3.61 Moore, R.S., Notz, K.J., "Physical Characteristics of GE BWR Fuel Assemblies," Oak Ridge National Laboratory, June, 1989, ORNL/TM-10902.

3.62 "Characteristics of Potential Repository Wastes," Office of Civilian Radioactive Waste Management, DOE/RW-0184-R1, June 1992.

3.63 U.S. Government, "Seismic and Geological Siting Criteria for Nuclear Power Plants," Title 10 Code of Federal Regulations, Part 100, Appendix A, Office of the Federal Register, Washington, D.C.

3.64 U.S. Government, "Shippers - General Requirements for Shipments and Packagings," Title 49 Code of Federal Regulations, Part 173, Office of the Federal Register, Washington, D.C.

3.65 U.S. Government, "Domestic Licensing of Production and Utilization Facilities," Title 10 Code of Federal Regulations, Part 50, Office of the Federal Register, Washington, D.C.

3.66 U.S. Nuclear Regulatory Commission, "Control of Heavy Loads at Nuclear Power Plants," NUREG-0612 (July 1980).

3.67 Lacey Board of Adjustment, Application No. 93-40, in regard to the matter of Jersey Central Power and Light Co., Testimony of Robert Jefferson. Transcript in the above matter taken at the Lacey Township Municipal Building on Thursday, June 15, 1995.

3.68 U.S. Government, "Protection Against Malevolent Use of Vehicles at Nuclear Power Plants," Title 10 Code of Federal Regulations, Part 73, Office of the Federal Register, Washington, D.C.

3.69 U.S. Nuclear Regulatory Commission, "Protection Against Malevolent Use of Vehicles at Nuclear Power Plants," Regulatory Guide 5.68.