INSERVICE INSPECTION REPORT

Date of Document Completion: January 18, 2002

REFUELING 17

INTERVAL 3
PERIOD 2
OUTAGE 1

J. M. FARLEY UNIT 1
NUCLEAR GENERATING PLANT
COLUMBIA, ALABAMA 36319

Commercial Service Date: December 1, 1977

Southern Nuclear Operating Company
40 Inverness Parkway
Birmingham, Alabama 35242

A047

INDEX

SECTION	TAB
NIS-1 OWNERS REPORT	A
SUMMARY	B
EXAMINATION PROGRAM	C
EXAMINATION RESULTS	D
ADDITIONAL EXAMINATIONS	E
INDICATIONS	F
PERSONNEL, EQUIPMENT, MATERIAL, & CALIBRATION BLOCK CERTIFICATIONS	G
EXAMINATION PROCEDURES	H
REACTOR VESSEL INSPECTION TOOL DATA AND RESULTS	I
NIS-2 FORM-OWNER'S REPORTS FOR REPAIRS AND REPLACEMENTS	J

A

FORM NIS-1 OWNER'S REPORT FOR INSERVICE INSPECTIONS
As required by the Provisions of the ASME Code Rules

1. Owner Southern Nuclear Operating Co. 40 Inverness Center Parkway, Birmingham, Al 35242 (as agent for Alabama Power Co.)
(Name and Address of Owner)

2. Plant J. M. Farley Nuclear Plant, Hwy 95 South, Columbia, Al. 36319
(Name and Address of Plant)

3. Plant Unit 1 4. Owner Certificate of Authorization (if required) N/A

5. Commercial Service 12/01/77 6. National Board Number for Unit See Listed N. B. for each component

7. Components Inspected

Component or Appurtenance	Manufacturer or Installer	Manufacturer or Installer Serial No.	State or Province No.	National Board No.
Reactor Vessel Closure Head	Combustion Engineering	69204	N/A	21012
Reactor Vessel	Combustion Engineering	69104	N/A	21012
Reactor Coolant Piping	Southwest Fabricating	N/A	N/A	N/A
Pressurizer	Westinghouse Tampa	1431	N/A	68-103
Reactor Coolant Pumps A & B	Westinghouse EMD	RCPCP1-1 RCPCP1-2	N/A	N/A
Containment Spray Pump A	Goulds Pumps	N225B638-1	N/A	N/A
Class 1 Piping	Daniel Construction	N/A	N/A	N/A
Class 2 Piping	Daniel Construction	N/A	N/A	N/A

Note: Supplemental sheets in the form of lists, sketches, or drawings may be used, provided (1) size is 8 1/2 in. x 11 in., (2) information in items 1 through 6 on this report is included on each sheet, and (3) each sheet is numbered and the number of sheets is recorded at the top of this form.

FORM NIS-1

8. Examination Dates **10/06/01** to **11/16/01**

9. Inspection Period Identification: **Second Period 04/01/01 to 08/01/04**

10. Inspection Interval Identification: **Third Interval 12/01/97 to 12/01/07**

11. Applicable Edition of Section XI **1989** **Addenda None**
Subsections IWE and IWL **1992** **Addenda 1992**

12. Date/Revision of Inspection Plan: **FNP-1-M-097; 09/13/01; Revision 2**

13. Abstract of Examinations and Tests. Include a list of examinations and tests and a statement concerning status of work required for the Inspection Plan. **See Tabs B, C and E**

14. Abstract of Results of Examinations and Tests. **See Tab B**

15. Abstract of Corrective Measures. **See Tab B**

We certify that a) the statements made in this report are correct, b) the examinations and tests meet the Inspection Plan as required by the ASME Code, Section XI, and c) corrective measures taken conform to the rules of the ASME Code, Section XI.

Certificate of Authorization No. (if applicable) **N/A** Expiration Date **N/A**

Date 1-18 20 02 Signed **Southern Nuclear Operating Co.** By R. M. Stinson
(Owner)

CERTIFICATE OF INSERVICE INSPECTION

I, the undersigned, holding a valid commission issued by the National Board of Boiler and Pressure Vessel Inspectors and the State or Province of Georgia and employed by Factory Mutual Insurance Company of Johnston, Rhode Island have inspected the components described in this Owner's Report during the period 10/6/01 to 11/16/01, and state that to the best of my knowledge and belief, the Owner has performed examinations and tests and taken corrective measures described in this Owner's Report in accordance with the Inspection Plan and as required by the ASME Code, Section XI.

By signing this certificate neither the Inspector nor his employer makes any warranty, expressed or implied, concerning the examinations, tests, and corrective measures described in this Owner's Report. Furthermore, neither the Inspector nor his employer shall be liable in any manner for any personal injury or property damage or a loss of any kind arising from or connected with this inspection.

Charles G. Ward Commissions GA 328 INA
Inspector's Signature National Board, State, Province, and Endorsements

Date 1/18 20 02

OWNER'S REPORT
FOR
INSERVICE INSPECTION

DATE: 01/18/02

OWNER NAME AND ADDRESS: Southern Nuclear Operating Co.
40 Inverness Parkway
Birmingham, Al 35242
(as agent for Alabama Power Co.)

NAME AND ADDRESS OF NUCLEAR GENERATING PLANT: Joseph M. Farley Nuclear Plant
Highway 95 South
Columbia, Alabama 36319

NAME ASSIGNED TO NUCLEAR POWER UNIT: Joseph M. Farley Nuclear Plant
Unit 1

OWNER CERTIFICATE OF AUTHORIZATION: N/A

COMMERCIAL SERVICE DATE: December 1, 1977

NATIONAL BOARD NUMBER: See listed NB's for each component

NAME OF COMPONENTS OR PARTS OF COMPONENTS INVOLVED: Representative samples of the following components and systems were examined using nondestructive examination techniques.

CLASS 1

COMPONENT OR SYSTEM	SYSTEM DESIGNATION	ALA SKETCH
Reactor Vessel Closure Head	B13	1-1300B
Reactor Vessel Reactor Coolant System	B11 B13	1-1100 1-4205, 1-4502, 1-4503
Reactor Coolant Pump	B41	1-5100, 1-5200
Pressurizer	B31	1-2100
RHR System	E11	1-4101, 1-4301
Safety Injection System	E21	1-4201, 1-4202, 1-4204, 1-4305
CVCS System	E21	1-4209, 1-4309

CLASS 2

COMPONENT OR SYSTEM	SYSTEM DESIGNATION	ALA SKETCH
Containment Spray Pump	E13	2-5150
Main Steam System	N11	2-4100
RHR System	E11	2-4504, 2-4507

HYDROSTATIC TESTING: **SEE TABS B AND E**

NAME AND ADDRESS OF MANUFACTURER OR INSTALLER OF COMPONENTS:

REACTOR VESSEL AND REACTOR VESSEL CLOSURE HEAD Combustion Engineering, Inc. Chattanooga, Tennessee	REACTOR COOLANT PIPING Southwest Fabricating and Welding Co., Inc. Houston, Texas
Pressurizer Westinghouse Electric Corporation Tampa Division Tampa, Florida	Reactor Coolant Pumps A & B Westinghouse Electric Corporation Electro Mechanical Division Cheswick, Pennsylvania
CLASS 1 & 2 PIPING Daniel Construction Co. Greenville, South Carolina	Containment Spray Pump A Goulds Pumps, Inc. Seneca Falls, New York

INSERVICE INSPECTION DATES: **10/06/01 TO 11/16/01**

NAME OF AUTHORIZED NUCLEAR INSPECTOR: Charles G. Ward

NAME AND MAILING ADDRESS OF INSPECTOR'S EMPLOYER:

Factory Mutual Insurance Company
1301 Atwood Ave.
P. O. Box 7500
Johnston, RI. 02919

ABSTRACT: SEE TABS B AND C

B

J. M. FARLEY NUCLEAR PLANT UNIT NO 1
INTERVAL 3 PERIOD 2 OUTAGE 1
BALANCE OF PLANT/REACTOR VESSEL EXAMINATION SUMMARY

INTRODUCTION

An Inservice examination of Class 1 and 2 components and piping systems was conducted at Farley Nuclear Plant Unit 1 during October 2001. The examinations were performed in accordance with an approved Examination Program Plan located under Tab C of this report. The primary areas of examination included the Reactor Vessel, RCS Piping, RHR/CVCS Piping and supports, Containment Spray Piping and supports and Main Steam/Main Feedwater Piping and supports.

The program utilized ultrasonic, surface and visual nondestructive testing methods in accordance with the requirements of ASME Section XI 1989 Edition and Technical Specifications 5.5.7, 5.5.8 and 5.5.16.

Selected examinations and related activities were witnessed by representatives of Southern Nuclear Operating Company and its Authorized Inspection Agency. All examinations were performed to the extent practical within geometric and physical limitations.

RESULTS

Examinations resulted in recordable indication areas being noted on the basis of procedure recording criteria, which generally are more conservative than specified in the ASME Section XI Acceptance Standards. Indications were evaluated and dispositioned by Indication Evaluation Reports (IER), shown in Tab F of this report. The results are summarized below.

SUMMARY OF INDICATIONS

CLASS 1

(A) VOLUMETRIC EXAMINATIONS

- There were no Class 1 Volumetric indications.

(B) SURFACE EXAMINATIONS

- There were no Class 1 Surface indications.

C) VISUAL EXAMINATIONS

- There were nine (9) valves and one (1) flow orifice noted with various degrees of boron accumulation, mainly on the bolted connection. In each case the boron was removed and a re-examination performed satisfactorily.

CLASS 2

(A) VOLUMETRIC EXAMINATIONS

- There were no Class 2 Volumetric indications.

(B) SURFACE EXAMINATIONS

- There were no Class 2 Surface indications.

(C) VISUAL EXAMINATIONS

- There were forty-two (42) Class 2 bolted connections noted with various degrees of boron accumulation. The items consisted of valve bonnets and flanged connections for equipment. In each case the boron was removed, an evaluation performed or new gaskets installed and a re-examination performed satisfactorily. In addition five (5) pumps were examined which had a small amount of boron in the seal area. These were evaluated as acceptable with no further action required.

AUGMENTED EXAMINATIONS

- Augmented surface examinations were performed on the A Reactor Coolant Pump Flywheel. No indications were identified.

ADDITIONAL EXAMINATIONS

Results from additional examinations which were performed during this outage are as follows:

- **Class 1 System Leakage Test**

  In accordance with ASME Section XI 1989 Edition IWB-5210(a)(1), leak testing of the Class 1 Reactor Coolant System Pressure Boundary was performed prior to startup following the 17th refueling outage. The testing was completed by plant personnel on 10/30/01. A copy of the completed test procedure FNP-1-SOP-1.4 is retained by the Farley Nuclear Plant Document Control. The VT-2 data sheet is located behind Tab D.

  Subsequent to the Class 1 leakage test, control rod operability testing indicated problems with the seventeen (17) original equipment RCCA's installed in the plant meeting test acceptance criteria. The other thirty-one (31) RCCA's had been changed during a planned replacement program in previous outages. The plant was returned to cold shutdown, the reactor head disassembled and the 17 affected fuel assemblies were transferred to the spent fuel pool for changeout of the RCCA's. The RCCA replacement delayed the end of the outage until 11/16/01. The VT-2 data sheet associated with equipment disassembled after the completion of procedure FNP-1-SOP-1.4 and the end of the outage are also included behind Tab D.

  In addition, to meet the 1989 Section XI IWA-5242(a) requirement for removal of insulation from bolted connections in "systems borated for the purpose of controlling reactivity" the alternative exam requirements of Relief Request RR-27 were used. This Relief Request allowed the insulation to be removed and the bolted connection to be examined for evidence of leakage at static conditions. If evidence of leakage affecting the bolting was apparent the bolting was removed and examined per IWA-5250(2). IER-001 under Tab F contains the results of the evaluations, for ASME Class 1 bolted connections indicating evidence of boric acid.

- **Class 1 and 2 Hydrotesting**

  No hydrostatic testing was performed during the 17th refueling outage to meet requirements of the current inspection interval.

- **Class 2 Functional/Inservice Testing**

  Class 2 functional testing performed during the 17th refueling outage included portions of the Main Steam, Main Feedwater, Safety Injection and Charging systems.

- **Class MC Examinations**

  Following replacement of the fuel transfer tube blind flange, removed for fuel movement associated with the RCCA changeout, new gaskets were installed and examined per WO 01008091. An acceptable final local leak rate test (LLRT) was also performed on the flange. These actions were performed in accordance with the requirements of Relief Request RR-31.

STATUS OF EXAMINATIONS REQUIRED FOR CURRENT INTERVAL

This refueling was the 1st outage, 2nd period of the current interval and the examinations completed to date represent approximately 30 % of the total Class 1 and 2 scope for the current period. Approximately 40 % of the examinations required for the current interval have been completed.

STEAM GENERATOR EDDY-CURRENT EXAMINATION SUMMARY

U1R17 was the first inservice inspection of the new replacement Model 54F steam generators which were replaced during U1R16. The inspection scope for all three SG's was:

- 100% full length bobbin (with exception of low row U-bends)
- 20% hot leg top of tubesheet plus point
- 100% low row U-bend plus point
- Plus point of bobbin signals which were not observed during the Pre-Service Inspection (PSI) or which had changed since the PSI.

No indications of degradation were observed and the inspections were completed ahead of schedule. There were no indications of tube wear or foreign objects in SG's 1A and 1B where MIMs signals had indicated the possiblity of a loose part (s).

Work was performed in accordance with NEI 97-06 Rev 1 and EPRI SG NDE Guidelines, Rev 5.

C

EXAMINATION PROGRAM PLAN

UNIT 1 RF 17

INTERVAL 3 PERIOD 2 OUTAGE 1

2001

UNIT 1

FIGURE 2

FARLEY NUCLEAR PLANT
INSERVICE INSPECTION PROGRAM CHANGE

Unit No. 1 Change No. 004 Page 1 of 1

10 Year Interval 3 40 Month Period 2 Outage 1

	Components: Delete Examination	Exam Required	Reason For Change:
1	ALA1-4102-QV032A	VT-3 / INTERNAL SURFACE	Valve not disassembled
2	ALA1-4102-QV037A	VT-3 / INTERNAL SURFACE	Valve not disassembled
3	ALA1-4103-QV076A	VT-3 / INTERNAL SURFACE	Valve not disassembled
4	ALA1-4104-QV021C	VT-3 / INTERNAL SURFACE	Valve not disassembled
5	ALA1-4201-QV032B	VT-3 / INTERNAL SURFACE	Valve not disassembled
6	ALA1-4201-QV037B	VT-3 / INTERNAL SURFACE	Valve not disassembled
7	ALA1-4202-QV051B	VT-3 / INTERNAL SURFACE	Valve not disassembled
8	ALA1-4203-QV021B	VT-3 / INTERNAL SURFACE	Valve not disassembled
9	ALA1-4302-QV032C	VT-3 / INTERNAL SURFACE	Valve not disassembled
10	ALA1-4302-QV037C	VT-3 / INTERNAL SURFACE	Valve not disassembled
11	ALA1-4303-QV021A	VT-3 / INTERNAL SURFACE	Valve not disassembled
12	ALA1-4304-QV051A	VT-3 / INTERNAL SURFACE	Valve not disassembled
13	ALA1-4501-QV031A	VT-3 / INTERNAL SURFACE	Valve not disassembled
14	ALA1-4502-QV031B	VT-3 / INTERNAL SURFACE	Valve not disassembled
15	ALA1-4503-QV031C	VT-3 / INTERNAL SURFACE	Valve not disassembled
16	ALA1-5300-FW1	Surface / Volumetric	Pump not disassembled / Exam area not accessible
17	ALA1-5100-FW1	Volumetric	PT examination performed

APPROVED BY: N/A
Vendor Coordinator — Date

APPROVED BY: J. Ed Pyrock
SNC Coordinator — Date 10-26-01

UNIT 1

FIGURE 2

FARLEY NUCLEAR PLANT
INSERVICE INSPECTION PROGRAM CHANGE

Unit No. 1 **Change No.** 003 **Page** 1 **of** 1

10 Year Interval 3 **40 Month Period** 2 **Outage** 1

Components: **Reason For Change:**

	Change the Following	Exam Required	
	Delete the Following / Add the following		
1.	E4311H-SS-5654 One directional restraint VT-3 FNP-0-NDE-100.23	Replace with support E4311H-SS-3448 One Directional Restraint VT-3 / FNP-0-NDE-100.23	Support SS-5654 was deleted per WR267152. Replacement support was selected from same system / type.

APPROVED BY: John W Bell 10-18-01
Vendor Coordinator Date

APPROVED BY: Gary A. Lotts 10-18-01
SNC Coordinator Date

UNIT 1

FIGURE 2

FARLEY NUCLEAR PLANT
INSERVICE INSPECTION PROGRAM CHANGE

Unit No. 1 **Change No.** 002 **Page** 1 **of** 1

10 Year Interval 3 **40 Month Period** 2 **Outage** 1

Components: **Reason For Change:**

	Change the Following	Exam Required	
1.	ALA1-5100-FW1	SUR-AUG FNP-0-NDE-100.11	**Change procedure to :** FNP-0-NDE-100.5
2.	ALA1-5300-FW1	SUR-AUG FNP-0-NDE-100.11	**Change procedure to :** FNP-0-NDE-100.5
	Delete the Following		
1.	**HEG-264-AFW-R72**	VT-3	**Snubber was deleted per ECP 95-1 8832.**

APPROVED BY: John W. Bell **Vendor Coordinator** 10-16-01 **Date**

APPROVED BY: James A. Hoffman **SNC Coordinator** 10-16-01 **Date**

UNIT 1

FIGURE 2

FARLEY NUCLEAR PLANT
INSERVICE INSPECTION PROGRAM CHANGE

Unit No. 1 **Change No.** 001 **Page** 1 **of** 2

10 Year Interval 3 **40 Month Period** 2 **Outage** 1

Components: **Reason For Change:**

	Delete the Following	Exam Required	
1.	ALA2-4350-24R	VOL and SUR	UT Thickness not required per Engineering
2.	ALA2-4350-23R	SUR	No surface exam Required = UT thickness
3.	ALA1-4300-4R	VOL and SUR	UT Thickness not required per Engineering
4.	ALA2-5150-CS-2	VT-3 / F-A F1.40	"Containment Spray pump equipment
5.	ALA2-5150-CS-3	VT-3 / F-A F1.40	Support was re-numbered as
6.	ALA2-5150-CS-4	VT-3 / F-A F1.40	ALA2-5150-CS-1, this support has
7.	ALA2-5150-CS-5	VT-3 / F-A F1.40	14 bolts, with no welded attachments.
8.	ALA2-5150-CS-6	VT-3 / F-A F1.40	The support should include the IWF
9.	ALA2-5150-CS-5 (NS)	SUR / C-C C3.30	Boundary as defined by ASME XI and
10.	ALA2-5150-CS-6 (FS)	SUR / C-C C3.30	Be listed as one support."
	Change the following:	**Old procedure**	**New Procedure**
1.	ALA2-4350-23R	FNP-0-NDE-100.43	FNP-0-NDE-100.35 UT Thickness
2.	D170153-CS TANK (ATT)	FNP-0-NDE-100.23	FNP-0-NDE-100.21 VT-1 Procedure
	Add the Following		
1.	ALA1-1100-CS-1	FNP-0-NDE-100.23 (VT-3) RPV Support F-A / F1.40	RR-44 / Exam to be performed while looking for Boron leakage on RCS pipe
2.	ALA1-1100-CS-2	FNP-0-NDE-100.23 (VT-3) RPV Support F-A / F1.40	RR-44 / Exam to be performed while looking for Boron leakage on RCS pipe
3.	ALA1-1100-CS-3	FNP-0-NDE-100.23 (VT-3) RPV Support F-A / F1.40	RR-44 / Exam to be performed while looking for Boron leakage on RCS pipe
4.	ALA1-1100-CS-4	FNP-0-NDE-100.23 (VT-3) RPV Support F-A / F1.40	RR-44 / Exam to be performed while looking for Boron leakage on RCS pipe
5.	ALA1-1100-CS-5	FNP-0-NDE-100.23 (VT-3) RPV Support F-A / F1.40	RR-44 / Exam to be performed while looking for Boron leakage on RCS pipe
6.	ALA1-1100-CS-6	FNP-0-NDE-100.23 (VT-3) RPV Support F-A / F1.40	RR-44 / Exam to be performed while looking for Boron leakage on RCS pipe

APPROVED BY: N/A — **Vendor Coordinator** — N/A **Date**

APPROVED BY: Gary A. Lotter — **SNC Coordinator** — 10-3-2001 **Date**

UNIT 1

FIGURE 2

FARLEY NUCLEAR PLANT
INSERVICE INSPECTION PROGRAM CHANGE

Unit No. 1 **Change No.** 001 **Page** 2 **of** 2

10 Year Interval 3 **40 Month Period** 2 **Outage** 1

	Defer the Following Items	Examination Method	Reason for change:
1.	ALA1-2100-3	VOL	**Examination deferred until 3-2-2**
2.	ALA1-2100-7	VOL	**Examination deferred until 3-2-2**
3.	ALA1-2100-14	VOL and SUR	**Examination deferred until 3-2-2**
4.	ALA1-2100-14IR	VOL	**Examination deferred until 3-2-2**

APPROVED BY: - N/A - N/A
Vendor Coordinator **Date**

APPROVED BY: [signature] 10-3-2001
SNC Coordinator **Date**

(89) Code Cat. (89) Item No.	Component No. Figure No.	Component Desc.	Cal Block No.	Method Sur	Vol	Vis	NDE Procedures	Remarks
B-O B14.10	ALA1-1300-55 Figure 022	CRD HOUSING WELDS			SUR		FNP-0-NDE-100.5	
B-G-1 B6.10	ALA1-1300-N20 Figure	REACTOR VESSEL NUTS			VT-1		FNP-0-NDE-100.21	
B-G-1 B6.10	ALA1-1300-N21 Figure	REACTOR VESSEL NUTS			VT-1		FNP-0-NDE-100.21	
B-G-1 B6.10	ALA1-1300-N22 Figure	REACTOR VESSEL NUTS			VT-1		FNP-0-NDE-100.21	
B-G-1 B6.10	ALA1-1300-N23 Figure	REACTOR VESSEL NUTS			VT-1		FNP-0-NDE-100.21	
B-G-1 B6.10	ALA1-1300-N24 Figure	REACTOR VESSEL NUTS			VT-1		FNP-0-NDE-100.21	
B-G-1 B6.10	ALA1-1300-N25 Figure	REACTOR VESSEL NUTS			VT-1		FNP-0-NDE-100.21	
B-G-1 B6.10	ALA1-1300-N26 Figure	REACTOR VESSEL NUTS			VT-1		FNP-0-NDE-100.21	
B-G-1 B6.10	ALA1-1300-N27 Figure	REACTOR VESSEL NUTS			VT-1		FNP-0-NDE-100.21	
B-G-1 B6.10	ALA1-1300-N28 Figure	REACTOR VESSEL NUTS			VT-1		FNP-0-NDE-100.21	
B-G-1 B6.10	ALA1-1300-N29 Figure	REACTOR VESSEL NUTS			VT-1		FNP-0-NDE-100.21	
B-G-1 B6.10	ALA1-1300-N30 Figure	REACTOR VESSEL NUTS			VT-1		FNP-0-NDE-100.21	
B-G-1 B6.10	ALA1-1300-N31 Figure	REACTOR VESSEL NUTS			VT-1		FNP-0-NDE-100.21	
B-G-1 B6.10	ALA1-1300-N32 Figure	REACTOR VESSEL NUTS			VT-1		FNP-0-NDE-100.21	
B-G-1 B6.10	ALA1-1300-N33 Figure	REACTOR VESSEL NUTS			VT-1		FNP-0-NDE-100.21	

(89) Code Cat. (89) Item No.	Component No. Figure No.	Component Desc.	Cal Block No.	Method Sur	Vol	Vis	NDE Procedures	Remarks
B-G-1 B6.10	ALA1-1300-N34 Figure	REACTOR VESSEL NUTS			VT-1		FNP-0-NDE-100.21	
B-G-1 B6.10	ALA1-1300-N35 Figure	REACTOR VESSEL NUTS			VT-1		FNP-0-NDE-100.21	
B-G-1 B6.10	ALA1-1300-N36 Figure	REACTOR VESSEL NUTS			VT-1		FNP-0-NDE-100.21	
B-G-1 B6.10	ALA1-1300-N37 Figure	REACTOR VESSEL NUTS			VT-1		FNP-0-NDE-100.21	
B-G-1 B6.10	ALA1-1300-N38 Figure	REACTOR VESSEL NUTS			VT-1		FNP-0-NDE-100.21	
B-G-2 B7.80	ALA1-1300-PEN 53 Figure	CRD HOUSING BOLTING			VT-1		FNP-0-NDE-100.21	
B-G-1 B6.30	ALA1-1300-S20 Figure 016	REACTOR VESSEL STUDS	ALA-36		SUR		FNP-0-NDE-100.11	
B-G-1 B6.30	ALA1-1300-S20 Figure 016	REACTOR VESSEL STUDS	ALA-36		VOL		FNP-0-NDE-100.39	
B-G-1 B6.30	ALA1-1300-S21 Figure 016	REACTOR VESSEL STUDS	ALA-36		SUR		FNP-0-NDE-100.11	
B-G-1 B6.30	ALA1-1300-S21 Figure 016	REACTOR VESSEL STUDS	ALA-36		VOL		FNP-0-NDE-100.39	
B-G-1 B6.30	ALA1-1300-S22 Figure 016	REACTOR VESSEL STUDS	ALA-36		SUR		FNP-0-NDE-100.11	
B-G-1 B6.30	ALA1-1300-S22 Figure 016	REACTOR VESSEL STUDS	ALA-36		VOL		FNP-0-NDE-100.39	
B-G-1 B6.30	ALA1-1300-S23 Figure 016	REACTOR VESSEL STUDS	ALA-36		SUR		FNP-0-NDE-100.11	
B-G-1 B6.30	ALA1-1300-S23 Figure 016	REACTOR VESSEL STUDS	ALA-36		VOL		FNP-0-NDE-100.39	
B-G-1 B6.30	ALA1-1300-S24 Figure 016	REACTOR VESSEL STUDS	ALA-36		SUR		FNP-0-NDE-100.11	

(89) Code Cat. (89) Item No.	Component No. Figure No.	Component Desc.	Cal Block No.	Method Sur	Vol	Vis	NDE Procedures	Remarks
B-G-1 B6.30	ALA1-1300-S24 Figure 016	REACTOR VESSEL STUDS	ALA-36		VOL		FNP-0-NDE-100.39	
B-G-1 B6.30	ALA1-1300-S25 Figure 016	REACTOR VESSEL STUDS	ALA-36		VOL		FNP-0-NDE-100.39	
B-G-1 B6.30	ALA1-1300-S25 Figure 016	REACTOR VESSEL STUDS	ALA-36		SUR		FNP-0-NDE-100.11	
B-G-1 B6.30	ALA1-1300-S26 Figure 016	REACTOR VESSEL STUDS	ALA-36		SUR		FNP-0-NDE-100.11	
B-G-1 B6.30	ALA1-1300-S26 Figure 016	REACTOR VESSEL STUDS	ALA-36		VOL		FNP-0-NDE-100.39	
B-G-1 B6.30	ALA1-1300-S27 Figure 016	REACTOR VESSEL STUDS	ALA-36		SUR		FNP-0-NDE-100.11	
B-G-1 B6.30	ALA1-1300-S27 Figure 016	REACTOR VESSEL STUDS	ALA-36		VOL		FNP-0-NDE-100.39	
B-G-1 B6.30	ALA1-1300-S28 Figure 016	REACTOR VESSEL STUDS	ALA-36		VOL		FNP-0-NDE-100.39	
B-G-1 B6.30	ALA1-1300-S28 Figure 016	REACTOR VESSEL STUDS	ALA-36		SUR		FNP-0-NDE-100.11	
B-G-1 B6.30	ALA1-1300-S29 Figure 016	REACTOR VESSEL STUDS	ALA-36		SUR		FNP-0-NDE-100.11	
B-G-1 B6.30	ALA1-1300-S29 Figure 016	REACTOR VESSEL STUDS	ALA-36		VOL		FNP-0-NDE-100.39	
B-G-1 B6.30	ALA1-1300-S30 Figure 016	REACTOR VESSEL STUDS	ALA-36		SUR		FNP-0-NDE-100.11	
B-G-1 B6.30	ALA1-1300-S30 Figure 016	REACTOR VESSEL STUDS	ALA-36		VOL		FNP-0-NDE-100.39	
B-G-1 B6.30	ALA1-1300-S31 Figure 016	REACTOR VESSEL STUDS	ALA-36		SUR		FNP-0-NDE-100.11	
B-G-1 B6.30	ALA1-1300-S31 Figure 016	REACTOR VESSEL STUDS	ALA-36		VOL		FNP-0-NDE-100.39	

(89) Code Cat. (89) Item No.	Component No. Figure No.	Component Desc.	Cal Block No.	Method Sur	Vol	Vis	NDE Procedures	Remarks
B-G-1 B6.30	ALA1-1300-S32 Figure 016	REACTOR VESSEL STUDS	ALA-36		VOL		FNP-0-NDE-100.39	
B-G-1 B6.30	ALA1-1300-S32 Figure 016	REACTOR VESSEL STUDS	ALA-36		SUR		FNP-0-NDE-100.11	
B-G-1 B6.30	ALA1-1300-S33 Figure 016	REACTOR VESSEL STUDS	ALA-36		VOL		FNP-0-NDE-100.39	
B-G-1 B6.30	ALA1-1300-S33 Figure 016	REACTOR VESSEL STUDS	ALA-36		SUR		FNP-0-NDE-100.11	
B-G-1 B6.30	ALA1-1300-S34 Figure 016	REACTOR VESSEL STUDS	ALA-36		SUR		FNP-0-NDE-100.11	
B-G-1 B6.30	ALA1-1300-S34 Figure 016	REACTOR VESSEL STUDS	ALA-36		VOL		FNP-0-NDE-100.39	
B-G-1 B6.30	ALA1-1300-S35 Figure 016	REACTOR VESSEL STUDS	ALA-36		SUR		FNP-0-NDE-100.11	
B-G-1 B6.30	ALA1-1300-S35 Figure 016	REACTOR VESSEL STUDS	ALA-36		VOL		FNP-0-NDE-100.39	
B-G-1 B6.30	ALA1-1300-S36 Figure 016	REACTOR VESSEL STUDS	ALA-36		SUR		FNP-0-NDE-100.11	
B-G-1 B6.30	ALA1-1300-S36 Figure 016	REACTOR VESSEL STUDS	ALA-36		VOL		FNP-0-NDE-100.39	
B-G-1 B6.30	ALA1-1300-S37 Figure 016	REACTOR VESSEL STUDS	ALA-36		SUR		FNP-0-NDE-100.11	
B-G-1 B6.30	ALA1-1300-S37 Figure 016	REACTOR VESSEL STUDS	ALA-36		VOL		FNP-0-NDE-100.39	
B-G-1 B6.30	ALA1-1300-S38 Figure 016	REACTOR VESSEL STUDS	ALA-36		SUR		FNP-0-NDE-100.11	
B-G-1 B6.30	ALA1-1300-S38 Figure 016	REACTOR VESSEL STUDS	ALA-36		VOL		FNP-0-NDE-100.39	
B-G-1 B6.50	ALA1-1300-W20 Figure	REACTOR VESSEL WASHERS			VT-1		FNP-0-NDE-100.21	

(89) Code Cat. (89) Item No.	Component No. Figure No.	Component Desc.	Cal Block No.	Method Sur	Vol	Vis	NDE Procedures	Remarks
B-G-1 B6.50	ALA1-1300-W21 Figure	REACTOR VESSEL WASHERS			VT-1		FNP-0-NDE-100.21	
B-G-1 B6.50	ALA1-1300-W22 Figure	REACTOR VESSEL WASHERS			VT-1		FNP-0-NDE-100.21	
B-G-1 B6.50	ALA1-1300-W23 Figure	REACTOR VESSEL WASHERS			VT-1		FNP-0-NDE-100.21	
B-G-1 B6.50	ALA1-1300-W24 Figure	REACTOR VESSEL WASHERS			VT-1		FNP-0-NDE-100.21	
B-G-1 B6.50	ALA1-1300-W25 Figure	REACTOR VESSEL WASHERS			VT-1		FNP-0-NDE-100.21	
B-G-1 B6.50	ALA1-1300-W26 Figure	REACTOR VESSEL WASHERS			VT-1		FNP-0-NDE-100.21	
B-G-1 B6.50	ALA1-1300-W27 Figure	REACTOR VESSEL WASHERS			VT-1		FNP-0-NDE-100.21	
B-G-1 B6.50	ALA1-1300-W28 Figure	REACTOR VESSEL WASHERS			VT-1		FNP-0-NDE-100.21	
B-G-1 B6.50	ALA1-1300-W29 Figure	REACTOR VESSEL WASHERS			VT-1		FNP-0-NDE-100.21	
B-G-1 B6.50	ALA1-1300-W30 Figure	REACTOR VESSEL WASHERS			VT-1		FNP-0-NDE-100.21	
B-G-1 B6.50	ALA1-1300-W31 Figure	REACTOR VESSEL WASHERS			VT-1		FNP-0-NDE-100.21	
B-G-1 B6.50	ALA1-1300-W32 Figure	REACTOR VESSEL WASHERS			VT-1		FNP-0-NDE-100.21	
B-G-1 B6.50	ALA1-1300-W33 Figure	REACTOR VESSEL WASHERS			VT-1		FNP-0-NDE-100.21	
B-G-1 B6.50	ALA1-1300-W34 Figure	REACTOR VESSEL WASHERS			VT-1		FNP-0-NDE-100.21	
B-G-1 B6.50	ALA1-1300-W35 Figure	REACTOR VESSEL WASHERS			VT-1		FNP-0-NDE-100.21	

(89) Code Cat. (89) Item No.	Component No. Figure No.	Component Desc.	Cal Block No.	Method Sur	Vol	Vis	NDE Procedures	Remarks
B-G-1 B6.50	ALA1-1300-W36 Figure	REACTOR VESSEL WASHERS			VT-1		FNP-0-NDE-100.21	
B-G-1 B6.50	ALA1-1300-W37 Figure	REACTOR VESSEL WASHERS			VT-1		FNP-0-NDE-100.21	
B-G-1 B6.50	ALA1-1300-W38 Figure	REACTOR VESSEL WASHERS			VT-1		FNP-0-NDE-100.21	
B-D B3.110	ALA1-2100-11 Figure 008	SAFETY NOZZLE TO PZR TOP HEAD	APR-7		VOL		FNP-0-NDE-100.34	(SUPPLEMENTAL SURFACE EXAM)
B-D B3.110	ALA1-2100-11 Figure 008	SAFETY NOZZLE TO PZR TOP HEAD	APR-7		SUR		FNP-0-NDE-100.11	(SUPPLEMENTAL SURFACE EXAM)
B-D B3.120	ALA1-2100-11IR Figure 008	PZR NOZZLE INNER RADIUS	ALA-38		VOL		FNP-0-NDE-100.38	
B-D B3.110	ALA1-2100-12 Figure 008	SPRAY NOZZLE TO PZR TOP HEAD	APR-7		SUR		FNP-0-NDE-100.11	(SUPPLEMENTAL SURFACE EXAM)
B-D B3.110	ALA1-2100-12 Figure 008	SPRAY NOZZLE TO PZR TOP HEAD	APR-7		VOL		FNP-0-NDE-100.34	(SUPPLEMENTAL SURFACE EXAM)
B-D B3.120	ALA1-2100-12IR Figure 008	PZR NOZZLE INNER RADIUS	ALA-38		VOL		FNP-0-NDE-100.38	
B-D B3.110	ALA1-2100-13 Figure 008	SAFETY NOZZLE TO PZR TOP HEAD	APR-7		SUR		FNP-0-NDE-100.11	(SUPPLEMENTAL SURFACE EXAM)
B-D B3.110	ALA1-2100-13 Figure 008	SAFETY NOZZLE TO PZR TOP HEAD	APR-7		VOL		FNP-0-NDE-100.34	(SUPPLEMENTAL SURFACE EXAM)
B-D B3.120	ALA1-2100-13IR Figure 008	PZR NOZZLE INNER RADIUS	ALA-38		VOL		FNP-0-NDE-100.38	
~~B-D~~ B3.110	~~ALA1-2100-14~~ Figure 008	~~SURGE NOZZLE TO PZR BOTTOM~~ HEAD	~~APR-7~~		~~SUR~~		~~FNP-0-NDE-100.11~~	~~(SUPPLEMENTAL SURFACE EXAM)~~
~~B-D~~ B3.110	~~ALA1-2100-14~~ Figure 008	~~SURGE NOZZLE TO PZR BOTTOM~~ HEAD	~~APR-7~~		~~VOL~~		~~FNP-0-NDE-100.34~~	~~(SUPPLEMENTAL SURFACE EXAM)~~
~~B-D~~ B3.120	~~ALA1-2100-14IR~~ Figure 008	~~PZR NOZZLE INNER RADIUS~~	~~ALA-39~~		~~VOL~~		~~FNP-0-NDE-100.38~~	

PC-001

(89) Code Cat. (89) Item No.	Component No. Figure No.	Component Desc.	Cal Block No.	Method Sur Vol Vis	NDE Procedures	Remarks	
~~B-B~~ B2.12	~~ALA1-2100-3~~ Figure 002	~~PZR UPPER SHELL LONG SEAM~~	~~APR-7~~	~~VOL~~	~~FNP-0-NDE-100.34~~	~~1 ft of weld reqd.~~	PC-001
~~B-B~~ B2.11	~~ALA1-2100-7~~ Figure 001	~~PZR UPPER SHELL TO TOP HEAD~~	~~APR-7~~	~~VOL~~	~~FNP-0-NDE-100.34~~		
B-G-2 B7.70	ALA1-4101-QV016B (B) Figure	VALVE BOLTING	-	VT-1	FNP-0-NDE-100.21		
F-A F1.10	ALA1-4101-RHR-R98 Figure 037	ONE DIRECTIONAL RESTRAINT W/ATTACH	-	VT-3	FNP-0-NDE-100.23		
B-K B10.20	ALA1-4101-RHR-R98 (W2) Figure 028	WELDED ATTACHMENT	-	SUR	FNP-0-NDE-100.5		
~~B-M-2~~ B12.50	~~ALA1-4102-QV032A~~ Figure Internal	~~COPES VALVE~~		~~VT-3~~	~~FNP-0-NDE-100.23~~	~~Group 5. Inspect one per group if~~ disassembled.	PC-004
~~B-M-2~~ B12.50	~~ALA1-4102-QV037A~~ Figure Internal	~~COPES VALVE~~		~~VT-3~~	~~FNP-0-NDE-100.23~~	~~Group 5. Inspect one per group if~~ disassembled.	
~~B-M-2~~ B12.50	~~ALA1-4103-QV076A~~ Figure Internal	~~VELAN VALVE~~		~~VT-3~~	~~FNP-0-NDE-100.23~~	~~Group 2. Inspect one per group if~~ disassembled.	
~~B-M-2~~ B12.50	~~ALA1-4104-QV021C~~ Figure Internal	~~VELAN VALVE~~		~~VT-3~~	~~FNP-0-NDE-100.23~~	~~Group 2. Inspect one per group if~~ disassembled.	
B-G-2 B7.70	ALA1-4201-QV032B (B) Figure	VALVE BOLTING		VT-1	FNP-0-NDE-100.21		
~~B-M-2~~ B12.50	~~ALA1-4201-QV032B~~ Figure Internal	~~COPES VALVE~~		~~VT-3~~	~~FNP-0-NDE-100.23~~	~~Group 5. Inspect one per group if~~ disassembled.	PC-004
~~B-M-2~~ B12.50	~~ALA1-4201-QV037B~~ Figure Internal	~~COPES VALVE~~		~~VT-3~~	~~FNP-0-NDE-100.23~~	~~Group 5. Inspect one~~ per group ~~if~~ disassembled.	
B-G-2 B7.50	ALA1-4202-FLG-1 Figure	FLANGE BOLTING		VT-1	FNP-0-NDE-100.21		
B-G-2 B7.70	ALA1-4202-QV051B (B) Figure	VALVE BOLTING	-	VT-1	FNP-0-NDE-100.21		
~~B-M-2~~ B12.50	~~ALA1-4202-QV051B~~ Figure Internal	~~VELAN VALVE~~		~~VT-3~~	~~FNP-0-NDE-100.23~~	~~Group 2. Inspect one per group if~~ disassembled.	PC-004

(89) Code Cat. (89) Item No.	Component No. Figure No.	Component Desc.	Cal Block No.	Method Sur Vol Vis	NDE Procedures	Remarks	
~~B-M-2~~ B12.50	~~ALA1-4203-QV021B~~ Figure Internal	~~VELAN VALVE~~	~~-~~	~~VT-3~~	~~FNP-0-NDE-100.23~~	~~Group 2. Inspect one per group if~~ disassembled.	PC-004
B-G-2 B7.70	ALA1-4204-QV077B (B) Figure	VALVE BOLTING	-	VT-1	FNP-0-NDE-100.21		
B-F B5.40	ALA1-4205-35DM Figure 012	SAFE END TO PZR NOZZLE	APR-1	VOL	FNP-0-NDE-100.31		
B-F B5.40	ALA1-4205-35DM Figure 012	SAFE END TO PZR NOZZLE	APR-1	SUR	FNP-0-NDE-100.5		
B-G-2 B7.50	ALA1-4209-FLG-1 Figure	FLANGE BOLTING		VT-1	FNP-0-NDE-100.21		
~~B-J~~ B9.11	~~ALA1-4300-4R~~ Figure 012	~~ELBOW TO SAFE END~~		~~SUR~~	~~FNP-0-NDE-100.5~~	~~Added per Steam Generator~~ replacement. PSI during 1R16. Verify UT thickness measurements during 1R17 outage.	PC-001
~~B-J~~ B9.11	~~ALA1-4300-4R~~ Figure 012	~~ELBOW TO SAFE END~~		~~VOL~~	~~FNP-0-NDE-100.44~~	~~Added per Steam Generator~~ replacement. PSI during 1R16. Verify UT thickness measurements during 1R17 outage.	
B-G-2 B7.70	ALA1-4301-QV016A (B) Figure	VALVE BOLTING		VT-1	FNP-0-NDE-100.21		
~~B-M-2~~ B12.50	~~ALA1-4302-QV032C~~ Figure Internal	~~COPES VALVE~~		~~VT-3~~	~~FNP-0-NDE-100.23~~	~~Group 5. Inspect one per group if~~ disassembled.	PC-004
~~B-M-2~~ B12.50	~~ALA1-4302-QV037C~~ Figure Internal	~~COPES VALVE~~		~~VT-3~~	~~FNP-0-NDE-100.23~~	~~Group 5. Inspect one per group if~~ disassembled.	
~~B-M-2~~ B12.50	~~ALA1-4303-QV021A~~ Figure Internal	~~VELAN VALVE~~		~~VT-3~~	~~FNP-0-NDE-100.23~~	~~Group 2. Inspect one per group if~~ disassembled.	
~~B-M-2~~ B12.50	~~ALA1-4304-QV051A~~ Figure Internal	~~VELAN VALVE~~		~~VT-3~~	~~FNP-0-NDE-100.23~~	~~Group 2. Inspect one per group if~~ disassembled.	
F-A F1.10	ALA1-4305-SI-R266 Figure 037	HYDRAULIC SNUBBER	-	VT-3	FNP-0-NDE-100.23		

(89) Code Cat. (89) Item No.	Component No. Figure No.	Component Desc.	Cal Block No.	Method Sur	Vol	Vis	NDE Procedures	Remarks	
B-G-2 B7.50	ALA1-4309-FLG-1 Figure	FLANGE BOLTING			VT-1		FNP-0-NDE-100.21		
~~B-M-2~~ B12.50	~~ALA1-4501-QV031A~~ Figure Internal	~~CROSBY VALVE~~			~~VT-3~~		~~FNP-0-NDE-100.23~~	~~Group 4. Inspect one per group if~~ disassembled.	PC-004
B-F B5.40	ALA1-4502-1DM Figure 012	PZR NOZZLE TO SAFE END	ALA-5		SUR		FNP-0-NDE-100.5		
B-F B5.40	ALA1-4502-1DM Figure 012	PZR NOZZLE TO SAFE END	ALA-5		VOL		FNP-0-NDE-100.31		
~~B-M-2~~ B12.50	~~ALA1-4502-QV031B~~ Figure Internal	~~CROSBY VALVE~~			~~VT-3~~		~~FNP-0-NDE-100.23~~	~~Group 4. Inspect one per group if~~ disassembled.	PC-004
B-F B5.40	ALA1-4503-1DM Figure 012	PZR NOZZLE TO SAFE END	ALA-5		SUR		FNP-0-NDE-100.5		
B-F B5.40	ALA1-4503-1DM Figure 012	PZR NOZZLE TO SAFE END	ALA-5		VOL		FNP-0-NDE-100.31		
~~B-M-2~~ B12.50	~~ALA1-4503-QV031C~~ Figure Internal	~~CROSBY VALVE~~			~~VT-3~~		~~FNP-0-NDE-100.23~~	~~Group 4. Inspect one per group if~~ disassembled.	PC-004
B-G-2 B7.60	ALA1-5100-B25 Figure	RC PUMP SEAL HOUSING BOLTING			VT-1		FNP-0-NDE-100.21		
B-G-2 B7.60	ALA1-5100-B26 Figure	RC PUMP SEAL HOUSING BOLTING			VT-1		FNP-0-NDE-100.21		
B-G-2 B7.60	ALA1-5100-B27 Figure	RC PUMP SEAL HOUSING BOLTING			VT-1		FNP-0-NDE-100.21		
B-G-2 B7.60	ALA1-5100-B28 Figure	RC PUMP SEAL HOUSING BOLTING			VT-1		FNP-0-NDE-100.21		
B-G-2 B7.60	ALA1-5100-B29 Figure	RC PUMP SEAL HOUSING BOLTING			VT-1		FNP-0-NDE-100.21		
B-G-2 B7.60	ALA1-5100-B30 Figure	RC PUMP SEAL HOUSING BOLTING			VT-1		FNP-0-NDE-100.21		
B-G-2 B7.60	ALA1-5100-B31 Figure	RC PUMP SEAL HOUSING BOLTING			VT-1		FNP-0-NDE-100.21		

(89) Code Cat. (89) Item No.	Component No. Figure No.	Component Desc.	Cal Block No.	Method Sur	Vol	Vis	NDE Procedures	Remarks
B-G-2 B7.60	ALA1-5100-B32 Figure	RC PUMP SEAL HOUSING BOLTING			VT-1		FNP-0-NDE-100.21	
B-G-2 B7.60	ALA1-5100-B33 Figure	RC PUMP SEAL HOUSING BOLTING			VT-1		FNP-0-NDE-100.21	
B-G-2 B7.60	ALA1-5100-B34 Figure	RC PUMP SEAL HOUSING BOLTING			VT-1		FNP-0-NDE-100.21	
B-G-2 B7.60	ALA1-5100-B35 Figure	RC PUMP SEAL HOUSING BOLTING			VT-1		FNP-0-NDE-100.21	
B-G-2 B7.60	ALA1-5100-B36 Figure	RC PUMP SEAL HOUSING BOLTING			VT-1		FNP-0-NDE-100.21	
R-G/AUG B1.14	ALA1-5100-FW1 Figure	RC PUMP FLYWHEEL			SUR-AUG		~~FNP-0-NDE-100.11~~ FNP-0-NDE-100.5	Perform surface exam on any flywheel that is disassembled. Any flywheel not previously disassembled & surface examined, will be given a volumetric exam on inner half-radius during third period. PC-002
~~R-G/AUG~~ B1.14	~~ALA1-5100-FW1~~ Figure	~~RC PUMP FLYWHEEL~~			~~VOL-AUG~~		~~FNP-0-NDE-100.37~~	~~Perform surface exam on any~~ flywheel that is disassembled. Any flywheel not previously disassembled & surface examined, will be given a volumetric exam on inner half-radius during third period. PC-004
F-A F1.40	ALA1-5200-CS-1 Figure 037	REACTOR COOLANT PUMP B Q1B41P001B			VT-3		FNP-0-NDE-100.23	
F-A F1.40	ALA1-5200-CS-2 Figure 037	REACTOR COOLANT PUMP B Q1B41P001B			VT-3		FNP-0-NDE-100.23	
F-A F1.40	ALA1-5200-CS-3 Figure 037	REACTOR COOLANT PUMP B Q1B41P001B			VT-3		FNP-0-NDE-100.23	
~~R-G/AUG~~ B1.14	~~ALA1-5300-FW1~~ Figure	~~RC PUMP FLYWHEEL~~			~~SUR-AUG~~		~~FNP-0-NDE-100.11~~ FNP-0-NDE-100.5	~~Perform surface exam on any~~ flywheel that is disassembled. Any flywheel not previously disassembled & surface examined, will be given a volumetric exam on inner half-radius during third period. PC-0[illegible]

(89) Code Cat. (89) Item No.	Component No. Figure No.	Component Desc.	Cal Block No.	Method Sur Vol Vis	NDE Procedures	Remarks	
~~R-G/AUG~~ B1.14	~~ALA1-5300-FW1~~ Figure	~~RC PUMP FLYWHEEL~~		~~VOL-AUG~~	~~FNP-0-NDE-100.37~~	~~Perform surface exam on any~~ flywheel that is disassembled. Any flywheel not previously disassembled & surface examined, will be given a volumetric exam on inner half-radius during third period.	PC-004
F-A F1.20	ALA2-4100-MS3-R4 Figure 037	ONE DIRECTIONAL RESTRAINT W/ATTACH	-	VT-3	FNP-0-NDE-100.23	EXAMINE PER OR1-97-216.	
~~C-F-2~~ C5.51	~~ALA2-4350-23R~~ Figure 030	~~ELBOW TO REDUCER~~	~~ALA-25~~	~~SUR~~	~~FNP-0-NDE-100.5~~	~~Added per Steam Gen. replacement~~ during 1R16. Verify UT thickness measurements during 1R17 outage.	PC-001
C-F-2 C5.51	ALA2-4350-23R Figure 030	ELBOW TO REDUCER	ALA-25	VOL	FNP-0-NDE-100.~~48~~ 35	Added per Steam Gen. replacement during 1R16. Verify UT thickness measurements during 1R17 outage.	PC-001
~~C-F-2~~ C5.51	~~ALA2-4350-24R~~ Figure 030	~~REDUCER TO NOZZLE~~		~~SUR~~	~~FNP-0-NDE-100.5~~	~~Added per Steam Gen. replacement~~ during 1R16. Verify UT thickness measurements during 1R17 outage.	PC-001
~~C-F-2~~ C5.51	~~ALA2-4350-24R~~ Figure 030	~~REDUCER TO NOZZLE~~		~~VOL~~	~~FNP-0-NDE-100.43~~	~~Added per Steam Gen. replacement~~ during 1R16. Verify UT thickness measurements during 1R17 outage.	
C-F-1 C5.11	ALA2-4504-1 Figure 030	TEE TO PIPE	ALA-13	VOL-AUG	FNP-0-NDE-100.31	AUGMENTED EXAM SCAN 6" BASE METAL ON PIPE SIDE OF WELD.	
C-F-1 C5.11	ALA2-4504-2 Figure 030	PIPE TO ELBOW	ALA-13	VOL-AUG	FNP-0-NDE-100.31	AUGMENTED EXAM SCAN 6" BASE METAL ON PIPE SIDE OF WELD.	
C-F-1 C5.11	ALA2-4504-3 Figure 030	ELBOW TO PIPE	ALA-13	VOL-AUG	FNP-0-NDE-100.31	AUGMENTED EXAM SCAN 6" BASE METAL ON PIPE SIDE OF WELD.	
C-F-1 C5.11	ALA2-4507-1 Figure 030	TEE TO PIPE	ALA-13	VOL-AUG	FNP-0-NDE-100.31	AUGMENTED EXAM SCAN 6" BASE METAL ON PIPE SIDE OF WELD.	
C-F-1 C5.11	ALA2-4507-2 Figure 030	PIPE TO ELBOW	ALA-13	VOL-AUG	FNP-0-NDE-100.31	AUGMENTED EXAM SCAN 6" BASE METAL ON PIPE SIDE OF WELD.	
C-F-1 C5.11	ALA2-4507-3 Figure 030	ELBOW TO PIPE	ALA-13	VOL-AUG	FNP-0-NDE-100.31	AUGMENTED EXAM SCAN 6" BASE METAL ON PIPE SIDE OF WELD.	

(89) Code Cat. (89) Item No.	Component No. Figure No.	Component Desc.	Cal Block No.	Method Sur	Method Vol	Method Vis	NDE Procedures	Remarks
F-A F1.40	ALA2-5150-CS-1 Figure 037	CTMT SPRAY PMP (A) Q1E13P001A-A			VT-3		FNP-0-NDE-100.23	
~~F-A~~ F1.40	~~ALA2-5150-CS-2~~ Figure 037	~~CTMT SPRAY PMP (A) Q1E13P001A-A~~			~~VT-3~~		~~FNP-0-NDE-100.23~~	
~~F-A~~ F1.40	~~ALA2-5150-CS-3~~ Figure 037	~~CTMT SPRAY PMP (A) Q1E13P001A-A~~			~~VT-3~~		~~FNP-0-NDE-100.23~~	
~~F-A~~ F1.40	~~ALA2-5150-CS-4~~ Figure 037	~~CTMT SPRAY PMP (A) Q1E13P001A-A~~			~~VT-3~~		~~FNP-0-NDE-100.23~~	
~~F-A~~ F1.40	~~ALA2-5150-CS-5~~ Figure 037	~~CTMT SPRAY PMP (A) Q1E13P001A-A~~			~~VT-3~~		~~FNP-0-NDE-100.23~~	
~~C-C~~ C3.30	~~ALA2-5150-CS-5 (NS)~~ Figure 028	~~WELDED ATTACHMENT~~			~~SUR~~		~~FNP-0-NDE-100.5~~	~~N-509~~
~~F-A~~ F1.40	~~ALA2-5150-CS-6~~ Figure 037	~~CTMT SPRAY PMP (A) Q1E13P001A-A~~			~~VT-3~~		~~FNP-0-NDE-100.23~~	
~~C-C~~ C3.30	~~ALA2-5150-CS-6 (FS)~~ Figure 028	~~WELDED ATTACHMENT~~			~~SUR~~		~~FNP-0-NDE-100.5~~	~~N-509~~
D-A D1.10	D170153-CS TANK (ATT) Figure	CONDENSATE STO TANK Q1P11T001 ANCHOR BOLT RING ATT			VT-3		~~FNP-0-NDE-100.23~~ FNP-0-NDE-100.21	
F-A F1.40	D170153-CS TANK Figure 037	CONDENSATE STORAGE TANK Q1P11T001 ANCHOR BOLT RING			VT-3		FNP-0-NDE-100.23	
D-A D1.10	D170239-SW 501A (ATT) Figure	SW STR Q1P16F501A BASE RING WELDED TO BOT HEAD ATT			VT-1		FNP-0-NDE-100.21	
F-A F1.40	D170239-SW 501A Figure 037	SW STRAINER Q1P16F501A BASE RING WELDED TO BOTTOM			VT-3		FNP-0-NDE-100.23	
F-A F1.40	D175308-P001B-B Figure 037	AUX FW PUMP Q1N23P001B-B BASEPLATE			VT-3		FNP-0-NDE-100.23	
D-A D1.10	D175444-RH HX 1A (ATT) Figure	RH HEAT EXCHANGER Q1E11H001A-A PLATE SHELL ATTACHM			VT-1		FNP-0-NDE-100.21	
F-A F1.40	D175444-RH HX 1A Figure 037	RH HEAT EXCHANGER Q1E11H001A-A PLATE SHELL			VT-3		FNP-0-NDE-100.23	

PC-001

(89) Code Cat. (89) Item No.	Component No. Figure No.	Component Desc.	Cal Block No.	Method Sur	Method Vol	Method Vis	NDE Procedures	Remarks
~~F-A~~ F1.30	~~E4311H-SS-5654~~ Figure 038	~~ONE DIRECTIONAL RESTRAINT~~	~~-~~		~~VT-3~~		~~FNP-0-NDE-100.23~~	Delete per PC-03 PC-03
F-A F1.30	HEG-142-CW14-R51 Figure 038	TWO DIRECTIONAL RESTRAINT	-		VT-3		FNP-0-NDE-100.23	
D-A D1.20	HEG-144-CCW-A12 (ATT) Figure	ANCHOR ATTACHMENTS	-		VT-1		FNP-0-NDE-100.21	
F-A F1.30	HEG-144-CCW-A12 Figure 038	ANCHOR W/ATTACH	-		VT-3		FNP-0-NDE-100.23	
F-A F1.30	HEG-146-CW18-R113 Figure 038	SWAY STRUT	-		VT-3		FNP-0-NDE-100.23	
D-A D1.20	HEG-147-CW19-R147 (ATT) Figure	TWO DIRECTIONAL RESTRAINT ATTACHMENTS	-		VT-1		FNP-0-NDE-100.21	
F-A F1.30	HEG-147-CW19-R147 Figure 038	TWO DIRECTIONAL RESTRAINT W/ATTACH	-		VT-3		FNP-0-NDE-100.23	
F-A F1.30	HEG-147-CW19-R151 Figure 038	ONE DIRECTIONAL RESTRAINT	-		VT-3		FNP-0-NDE-100.23	
F-A F1.30	HEG-147-CW21-R145 Figure 038	TWO DIRECTIONAL RESTRAINT	-		VT-3		FNP-0-NDE-100.23	
~~F-A~~ F1.30	~~HEG-264-AFW-R72~~ Figure 038	~~SNUBBER (H)~~			~~VT-3~~		~~FNP-0-NDE-100.23~~	Delete per PC-02 PC-02
D-A D1.20	HEG-265-AFW-R92 (ATT) Figure	3 DIRECTIONAL RESTRAINT ATTACHMENTS	-		VT-1		FNP-0-NDE-100.21	
F-A F1.30	HEG-265-AFW-R92 Figure 038	3 DIRECTIONAL RESTRAINT W/ATTACH	-		VT-3		FNP-0-NDE-100.23	
F-A F1.30	HEG-266-AFW-R564 Figure 038	ONE DIRECTIONAL RESTRAINT	-		VT-3		FNP-0-NDE-100.23	
D-A D1.20	HEG-269-AFW-A20 (ATT) Figure	ANCHOR ATTACHMENTS	-		VT-1		FNP-0-NDE-100.21	
F-A F1.30	HEG-269-AFW-A20 Figure 038	ANCHOR W/ATTACH	-		VT-3		FNP-0-NDE-100.23	

(89) Code Cat. (89) Item No.	Component No. Figure No.	Component Desc.	Cal Block No.	Method Sur	Vol	Vis	NDE Procedures	Remarks
F-A F1.30	HEG-270-AFW-R69 Figure 038	TWO DIRECTIONAL RESTRAINT	-		VT-3		FNP-0-NDE-100.23	
F-A F1.30	HEG-28-SW2-R53 Figure 038	TWO DIRECTIONAL RESTRAINT	-		VT-3		FNP-0-NDE-100.23	
F-A F1.30	HEG-30-SW4&39-R84 Figure 038	TWO DIRECTIONAL RESTRAINT	-		VT-3		FNP-0-NDE-100.23	
F-A F1.30	HEG-31-SW5&6-R109 Figure 038	ONE DIRECTIONAL RESTRAINT	-		VT-3		FNP-0-NDE-100.23	
F-A F1.30	HEG-34-SW8-R17 Figure 038	SWAY STRUT	-		VT-3		FNP-0-NDE-100.23	
F-A F1.30	HEG-547-AFW-R509 Figure 038	TWO DIRECTIONAL RESTRAINT	-		VT-3		FNP-0-NDE-100.23	
F-A F1.30	HEG-548-AFW-H523 Figure 038	ONE DIRECTIONAL RESTRAINT	-		VT-3		FNP-0-NDE-100.23	
F-A F1.30	HEG-691-SW-R9302 Figure 038	TWO DIRECTIONAL RESTRAINT	-		VT-3		FNP-0-NDE-100.23	
F-A F1.30	HEG-692-SW-R400 Figure 038	SWAY STRUT	-		VT-3		FNP-0-NDE-100.23	
F-A F1.30	HEG-693-SW-R364 Figure 038	SWAY STRUT	-		VT-3		FNP-0-NDE-100.23	
D-A D1.20	HEG-693-SW-R366 (ATT) Figure	3 DIRECTIONAL RESTRAINT ATTACHMENTS	-		VT-1		FNP-0-NDE-100.21	
F-A F1.30	HEG-693-SW-R366 Figure 038	3 DIRECTIONAL RESTRAINT W/ATTACH	-		VT-3		FNP-0-NDE-100.23	
F-A F1.30	HEG-693-SW-R986 Figure 038	ONE DIRECTIONAL RESTRAINT	-		VT-3		FNP-0-NDE-100.23	
F-A F1.30	HEG-694-SW-R413 Figure 038	TWO DIRECTIONAL RESTRAINT	-		VT-3		FNP-0-NDE-100.23	
F-A F1.30	HEG-694-SW-R430 Figure 038	TWO DIRECTIONAL RESTRAINT	-		VT-3		FNP-0-NDE-100.23	

(89) Code Cat. (89) Item No.	Component No. Figure No.	Component Desc.	Cal Block No.	Method Sur	Vol	Vis	NDE Procedures	Remarks
F-A F1.30	HEG-698-SW-R312 Figure 038	SWAY STRUT	-		VT-3		FNP-0-NDE-100.23	
F-A F1.30	HEG-698-SW-R337 Figure 038	TWO DIRECTIONAL RESTRAINT	-		VT-3		FNP-0-NDE-100.23	
F-A F1.30	HEG-699-SW-R356 Figure 038	TWO DIRECTIONAL RESTRAINT	-		VT-3		FNP-0-NDE-100.23	
F-A F1.30	HEG-699-SW-R441 Figure 038	TWO DIRECTIONAL RESTRAINT	-		VT-3		FNP-0-NDE-100.23	
F-A F1.30	HEG-699-SW-R444 Figure 038	ONE DIRECTIONAL RESTRAINT	-		VT-3		FNP-0-NDE-100.23	
F-A F1.30	HEG-704-SW-R310 Figure 038	SWAY STRUT	-		VT-3		FNP-0-NDE-100.23	
F-A F1.30	HEG-704-SW-R334 Figure 038	TWO DIRECTIONAL RESTRAINT	-		VT-3		FNP-0-NDE-100.23	

(89) Code Cat. (89) Item No.	Component No. Figure No.	Component Desc.	Cal Block No.	Method Sur	Vol	Vis	NDE Procedures	Remarks
F-A F1.40	ALA1-1100-CS-1 Figure 037	RPV SUPPORT	—			VT-3	FNP-0-NDE-100.23	RR-44
F-A F1.40	ALA1-1100-CS-2 Figure 037	RPV SUPPORT	—			VT-3	FNP-0-NDE-100.23	RR-44
F-A F1.40	ALA1-1100-CS-3 Figure 037	RPV SUPPORT	—			VT-3	FNP-0-NDE-100.23	RR-44
F-A F1.40	ALA1-1100-CS-4 Figure 037	RPV SUPPORT	—			VT-3	FNP-0-NDE-100.23	RR-44
F-A F1.40	ALA1-1100-CS-5 Figure 037	RPV SUPPORT	—			VT-3	FNP-0-NDE-100.23	RR-44
F-A F1.40	ALA1-1100-CS-6 Figure 037	RPV SUPPORT	—			VT-3	FNP-0-NDE-100.23	RR-44
F-A F1.30	E4311H-SS-3448 Figure 038	ONE Directional Restraint	—			VT-3	FNP-0-NDE-100.23	
	Figure							
	Figure							
	Figure							
	Figure							
	Figure							
	Figure							
	Figure							

PC-001

PC-003

D

INDEX TAB D

DESCRIPTION	TAB
CLASS 1	
REACTOR VESSEL EXAMS	1.1
PRESSURIZER EXAMS	1.2
STEAM GENERATOR EXAMS	1.3
PIPING WELD EXAMS	1.4
VALVE BODIES/BOLTING EXAMS	1.5
REACTOR COOLANT PUMP EXAMS	1.6
PRESSURE RETAINING BOLTING/ PRESSURE TESTING EXAMS	1.7
CLASS 2	
COMPONENT EXAMS	2.1
STEAM GENERATOR EXAMS	2.2
PIPING WELD EXAMS	2.3

1.1

EXAMINATION SUMMARY
FOR UNIT 1
INTERVAL 3 PERIOD 2 OUTAGE 1

DRAWING ALA1-1100
REACTOR VESSEL

ITEM NO	VOLUMERIC			SURFACE			VISUAL			REMARKS
	NI	NRI	RI	NI	NRI	RI	NI	NRI	RI	
CS-1							X			RR-44
CS-2							X			RR-44
CS-3							X			RR-44
CS-4							X			RR-44
CS-5							X			RR-44
CS-6							X			RR-44

ALA1-1100

REACTOR VESSEL

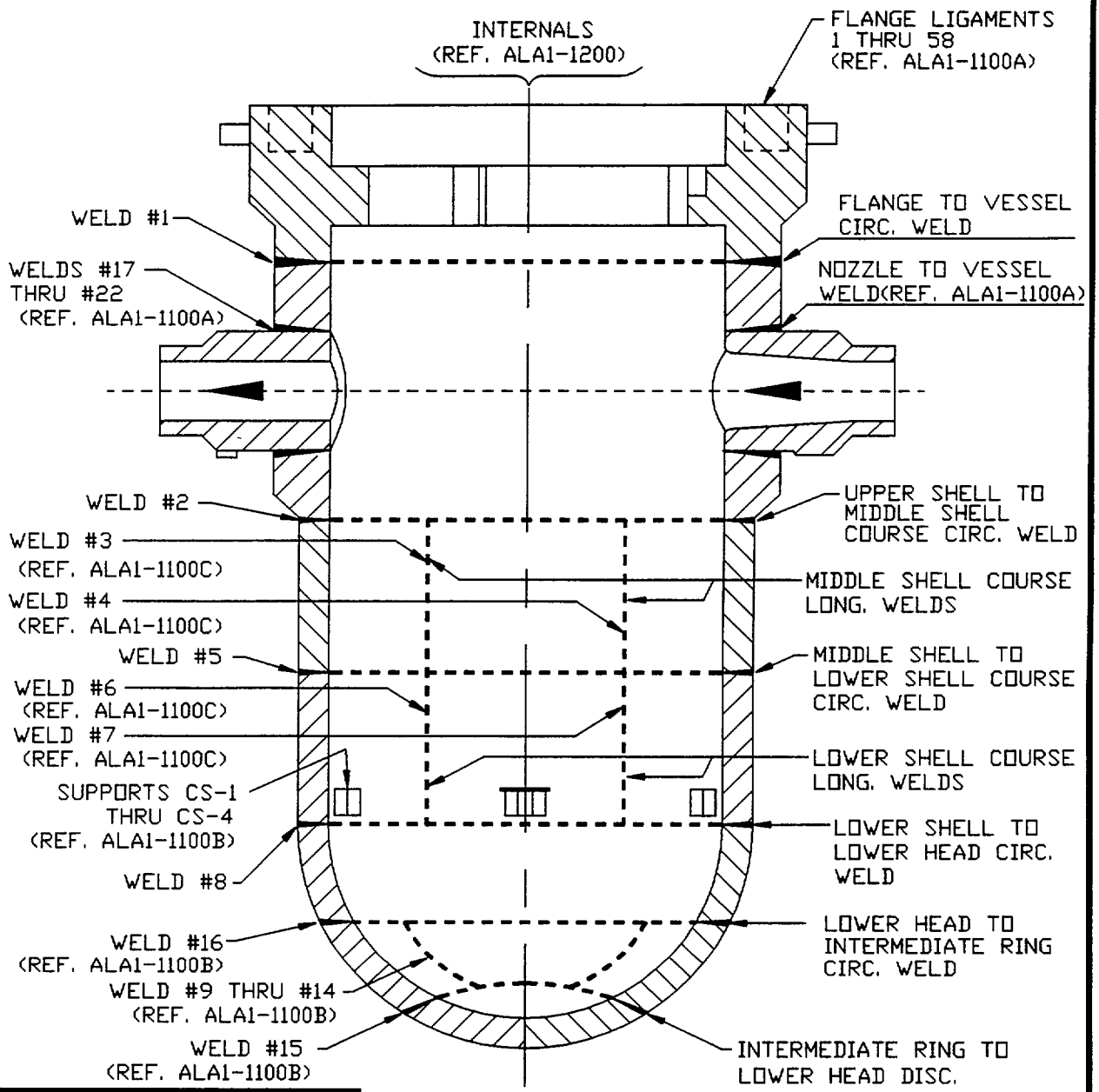

WELD #	FNP. FIG.	CAL. BLOCK
1	001	ALA-RV-2 ALA-RV-5
2	001	ALA-RV-5
5	001	ALA-RV-5
8	001	ALA-RV-1

REV.	DATE	BY	CHK'D	DESCRIPTION	APPR.1	APPR.2	APPR.3	APPR.4
2	3-26-98	RAW	JAR	REVISED PER REA 96-1295, REV.0	LDT	DLG DEV		
0	6-30-92	SDH	JAR	ISSUED PER PCN S-92-1-8162	CAB	CCM WRH	AH	DLM

CAD ALA11100 RAV-02
AUTOCAD

Southern Company Services, Inc. for REACTOR VESSEL

ALABAMA POWER COMPANY
JOSEPH M. FARLEY NUCLEAR PLANT
UNIT 1

SCS DRAWING NUMBER	SHEET	REV.
A-351192	1	2

Farley Nuclear Plant
Support Examination Record VT-3

SHARED

FNP-0-NDE-100.23
Southern Nuclear Operating Company

Plant/ Unit	System/Support No	WO/WA/STP	Sheet No.
Farley / 1	ALA1-1100-CS-1	N/A	S01F1V111

Hanger Type	Type Exam/Technique	Procedure/Version	Exam Date
RPV SUPPORT	VT-3 / Remote	FNP-0-NDE-100.23 / 5.0 / N/A	10/26/01

Examiner Signature	Level	Resolution		Tools
Scott Erickson Scott R. Erickson	II	1/32" Division (Scale)	✓	camera,scale
Examiner Signature	**Level**	1/32" Line (Gray Card)	—	
Paul DiValerio Paul DiValerio	II			

EXAMINATION LIST:

	Acceptable/ Unacceptable/ NA
Deformation or structural degradation of fasteners, springs, clamps, or other support items.	Acceptable
Missing, detached, or loosened support items.	Acceptable
Arc strikes, weld spatter, paint scoring, roughness, or general corrosion on close tolerance machined or sliding surfaces or on the wire strands of Wear devices.	N/A
Any crack or linear indication.	Acceptable
Fluid loss or lack of fluid indication (hydraulic snubber only).	N/A
Other conditions	N/A
Spring Can Hot and Cold Positions (draw sketch) — Time of Exam	N/A
Constant Spring Hanger (Sketch setting of pointer and setting location of the hot (red) and cold (white) stickers)	
Identification Plate Calibrated Load Setting	N/A

Sketch (if applicable)

Comments: This exam is limited to the outer face of the support accessible from the "sandbox" area of each RPV nozzle. Due to the restrictive space and access, a remote video was made using a camcorder on an extension pole. In addition to the support, the concrete wall adjacent to and below the support was examined as delineated in Request For Relief No. RR-44. Per 10-26-01

NDE Level II/III Review	Date:	ANII Review	Date:
J. Erik Aycock L-III	10-26-01	[illegible]	10/26/01

Farley Nuclear Plant
Support Examination Record VT-3

SHARED

FNP-0-NDE-100.23
Southern Nuclear Operating Company

Plant/ Unit	System/Support No	WO/WA/STP	Sheet No.
Farley / 1	ALA1-1100-CS-2	N/A	S01F1V112

Hanger Type	Type Exam/Technique	Procedure/Version	Exam Date
RPV SUPPORT	VT-3 / Remote	FNP-0-NDE-100.23 / 5.0 / N/A	10/26/01

Examiner Signature	Level	Resolution		Tools	camera,scale
Scott Erickson Scott R. Erickson	II	1/32" Division (Scale)	✔		
Examiner Signature: Paul DiValerio Paul DiValerio	Level: II	1/32" Line (Gray Card)	—		

EXAMINATION LIST:

	Acceptable/ Unacceptable/ NA	
Deformation or structural degradation of fasteners, springs, clamps, or other support items.	Acceptable	
Missing, detached, or loosened support items.	Acceptable	
Arc strikes, weld spatter, paint scoring, roughness, or general corrosion on close tolerance machined or sliding surfaces or on the wire strands of Wear devices.	N/A	
Any crack or linear indication.	Acceptable	
Fluid loss or lack of fluid indication (hydraulic snubber only).	N/A	
Other conditions	N/A	
Spring Can Hot and Cold Positions (draw sketch)	Time of Exam	N/A
Constant Spring Hanger (Sketch setting of pointer and setting location of the hot (red) and cold (white) stickers)		
Identification Plate Calibrated Load Setting	N/A	

Sketch (if applicable)

Comments: This exam is limited to the outer face of the support accessible from the "sandbox" area of each RPV nozzle. Due to the restrictive space and access, a remote video was made using a camcorder on an extension pole. In addition to the support, the concrete wall adjacent to and below the support was examined as delineated in Request For Relief No. RR 44.

JEW 10-26-01

NDE Level II/III Review	Date:	ANII Review	Date:
J. Erin Wyatt L-III	10-26-01	C G Wood	10/26/01

Farley Nuclear Plant
Support Examination Record VT-3

SHARED

FNP-0-NDE-100.23
Southern Nuclear Operating Company

Plant/ Unit	System/Support No	WO/WA/STP	Sheet No.
Farley / 1	ALA1-1100-CS-3	N/A	S01F1V113

Hanger Type	Type Exam/Technique	Procedure/Version	Exam Date
RPV SUPPORT	VT-3 / Remote	FNP-0-NDE-100.23 / 5.0 / N/A	10/26/01

Examiner Signature	Level	Resolution		Tools	camera,scale
Scott Erickson Scott R. Erickson	II	1/32" Division (Scale)	☑		
Examiner Signature	**Level**	1/32" Line (Gray Card)	☐		
Paul DiValerio Paul DiValerio	II				

EXAMINATION LIST:

	Acceptable/ Unacceptable/ NA
Deformation or structural degradation of fasteners, springs, clamps, or other support items.	Acceptable
Missing, detached, or loosened support items.	Acceptable
Arc strikes, weld spatter, paint scoring, roughness, or general corrosion on close tolerance machined or sliding surfaces or on the wire strands of Wear devices.	N/A
Any crack or linear indication.	Acceptable
Fluid loss or lack of fluid indication (hydraulic snubber only).	N/A
Other conditions	N/A
Spring Can Hot and Cold Positions (draw sketch) — Time of Exam _____	N/A
Constant Spring Hanger (Sketch setting of pointer and setting location of the hot (red) and cold (white) stickers)	
Identification Plate Calibrated Load Setting	N/A

Sketch (if applicable)

Comments: This exam is limited to the outer face of the support accessible from the "sandbox" area of each RPV nozzle. Due to the restrictive space and access, a remote video was made using a camcorder on an extension pole. In addition to the support, the concrete wall adjacent to and below the support was examined as delineated in Request For Relief No. RR-44.

GEK 10-26-01

NDE Level II/III Review	Date:	ANII Review	Date:
J. Eric Clyck L-III	10-26-01	[illegible]	10/26/01

Farley Nuclear Plant
Support Examination Record VT-3

SHARED

FNP-0-NDE-100.23
Southern Nuclear Operating Company

Plant/ Unit	System/Support No	WO/WA/STP	Sheet No.
Farley / 1	ALA1-1100-CS-4	N/A	S01F1V114

Hanger Type	Type Exam/Technique	Procedure/Version	Exam Date
RPV SUPPORT	VT-3 / Remote	FNP-0-NDE-100.23 / 5.0 / N/A	10/26/01

Examiner Signature	Level	Resolution		Tools	camera,scale
Scott Erickson Scott R. Erickson	II	1/32" Division (Scale)	☑		
Examiner Signature	**Level**	1/32" Line (Gray Card)	☐		
Paul DiValerio Paul DiValerio	II				

EXAMINATION LIST:

	Acceptable/ Unacceptable/ NA
Deformation or structural degradation of fasteners, springs, clamps, or other support items.	Acceptable
Missing, detached, or loosened support items.	Acceptable
Arc strikes, weld spatter, paint scoring, roughness, or general corrosion on close tolerance machined or sliding surfaces or on the wire strands of Wear devices.	N/A
Any crack or linear indication.	Acceptable
Fluid loss or lack of fluid indication (hydraulic snubber only).	N/A
Other conditions	N/A
Spring Can Hot and Cold Positions (draw sketch) — Time of Exam	N/A
Constant Spring Hanger (Sketch setting of pointer and setting location of the hot (red) and cold (white) stickers)	
Identification Plate Calibrated Load Setting	N/A

Sketch (if applicable)

Comments: This exam is limited to the outer face of the support accessible from the "sandbox" area of each RPV nozzle. Due to the restrictive space and access, a remote video was made using a camcorder on an extension pole. In addition to the support, the concrete wall adjacent to and below the support was examined as delineated in Request For Relief No. RR-44.

NDE Level II/III Review	Date:	ANII Review	Date:
L. Eric Aycock L-III	10-26-01	C G Wood	10/26/01

GEW 10-26-01

Version 5.0

Farley Nuclear Plant
Support Examination Record VT-3

SHARED

FNP-0-NDE-100.23
Southern Nuclear Operating Company

Plant/ Unit	System/Support No	WO/WA/STP	Sheet No.
Farley / 1	ALA1-1100-CS-5	N/A	S01F1V115

Hanger Type	Type Exam/Technique	Procedure/Version	Exam Date
RPV SUPPORT	VT-3 / Remote	FNP-0-NDE-100.23 / 5.0 / N/A	10/26/01

Examiner Signature	Level	Resolution		Tools	camera,scale
Scott Erickson Scott R. Erickson	II	1/32" Division (Scale)	☑		
Examiner Signature	**Level**	1/32" Line (Gray Card)	☐		
Paul DiValerio Paul DiValerio	II				

EXAMINATION LIST:

	Acceptable/ Unacceptable/ NA	
Deformation or structural degradation of fasteners, springs, clamps, or other support items.	Acceptable	
Missing, detached, or loosened support items.	Acceptable	
Arc strikes, weld spatter, paint scoring, roughness, or general corrosion on close tolerance machined or sliding surfaces or on the wire strands of Wear devices.	N/A	
Any crack or linear indication.	Acceptable	
Fluid loss or lack of fluid indication (hydraulic snubber only).	N/A	
Other conditions	N/A	
Spring Can Hot and Cold Positions (draw sketch)	Time of Exam _____	N/A _____
Constant Spring Hanger (Sketch setting of pointer and setting location of the hot (red) and cold (white) stickers)		
Identification Plate Calibrated Load Setting	N/A	

Sketch (if applicable)

Comments: This exam is limited to the outer face of the support accessible from the "sandbox" area of each nozzle on the RPV. Due to the restrictive space and access, a remote video was made using a camcorder on an extension pole. In addition to the support, the concrete wall adjacent to and below the support was examined as delineated in Request For Relief No. RR-44.

10-26-01

NDE Level II/III Review	Date:	ANII Review	Date:
J. Eric Aycock L-III	10-26-01		10/26/01

Version 5.0

Farley Nuclear Plant
Support Examination Record VT-3

SHARED

FNP-0-NDE-100.23
Southern Nuclear Operating Company

Plant/ Unit	System/Support No	WO/WA/STP	Sheet No.
Farley / 1	ALA1-1100-CS-6		S01F1V116

Hanger Type	Type Exam/Technique	Procedure/Version	Exam Date
RPV SUPPORT	VT-3 / Remote	FNP-0-NDE-100.23 / 5.0 / N/A	10/26/01

Examiner Signature	Level	Resolution		Tools	camera, scale
Scott Erickson Scott R. Erickson	II	1/32" Division (Scale)	✔		
Examiner Signature	Level	1/32" Line (Gray Card)			
Paul DiValerio Paul DiValerio	II				

EXAMINATION LIST:

	Acceptable/ Unacceptable/ NA
Deformation or structural degradation of fasteners, springs, clamps, or other support items.	Acceptable
Missing, detached, or loosened support items.	Acceptable
Arc strikes, weld spatter, paint scoring, roughness, or general corrosion on close tolerance machined or sliding surfaces or on the wire strands of Wear devices.	N/A
Any crack or linear indication.	Acceptable
Fluid loss or lack of fluid indication (hydraulic snubber only).	N/A
Other conditions	N/A
Spring Can Hot and Cold Positions (draw sketch) — Time of Exam	N/A
Constant Spring Hanger (Sketch setting of pointer and setting location of the hot (red) and cold (white) stickers)	
Identification Plate Calibrated Load Setting	N/A

Sketch (if applicable)

Comments: This exam is limited to the outerface of the support accessible from the "sandbox" area of each RPV nozzle. Due to the restrictive space and access, a remote video was made using a camcorder on an extention pole. In addition to the support, the concrete wall adjacent to and below the support was examined as delineated in Request For Relief RR44.
GEN 10-26-01

NDE Level II/III Review	Date:	ANII Review	Date:
Eric Dyck II-III	10-26-01	[illegible]	10/26/01

EXAMINATION SUMMARY
FOR UNIT 1
INTERVAL 3 PERIOD 2 OUTAGE 1

DRAWING ALA1-1300
REACTOR VESSEL CLOSURE HEAD

ITEM NO	VOLUMERIC			SURFACE			VISUAL			REMARKS
	NI	NRI	RI	NI	NRI	RI	NI	NRI	RI	
PEN. 53							X			
55				X						
S20	X			X						
S21	X			X						
S22	X			X						
S23	X			X						
S24	X			X						
S25	X			X						
S26	X			X						
S27	X			X						
S28	X			X						
S29	X			X						
S30	X			X						
S31	X			X						
S32	X			X						
S33	X			X						
S34	X			X						
S35	X			X						
S36	X			X						
S37	X			X						
S38	X			X						
N20							X			
N21							X			
N22							X			
N23							X			
N24							X			
N25							X			
N26							X			
N27							X			
N28							X			
N29							X			
N30							X			
N31							X			
N32							X			
N33							X			
N34							X			
N35							X			

EXAMINATION SUMMARY
FOR UNIT 1
INTERVAL 3 PERIOD 2 OUTAGE 1

DRAWING ALA1-1300
REACTOR VESSEL CLOSURE HEAD

ITEM NO	VOLUMERIC			SURFACE			VISUAL			REMARKS
	NI	NRI	RI	NI	NRI	RI	NI	NRI	RI	
N36							X			
N37							X			
N38							X			
W20							X			
W21							X			
W22							X			
W23							X			
W24							X			
W25							X			
W26							X			
W27							X			
W28							X			
W29							X			
W30							X			
W31							X			
W32							X			
W33							X			
W34							X			
W35							X			
W36							X			
W37							X			
W38							X			

REACTOR VESSEL CLOSURE HEAD

ALA1-1300

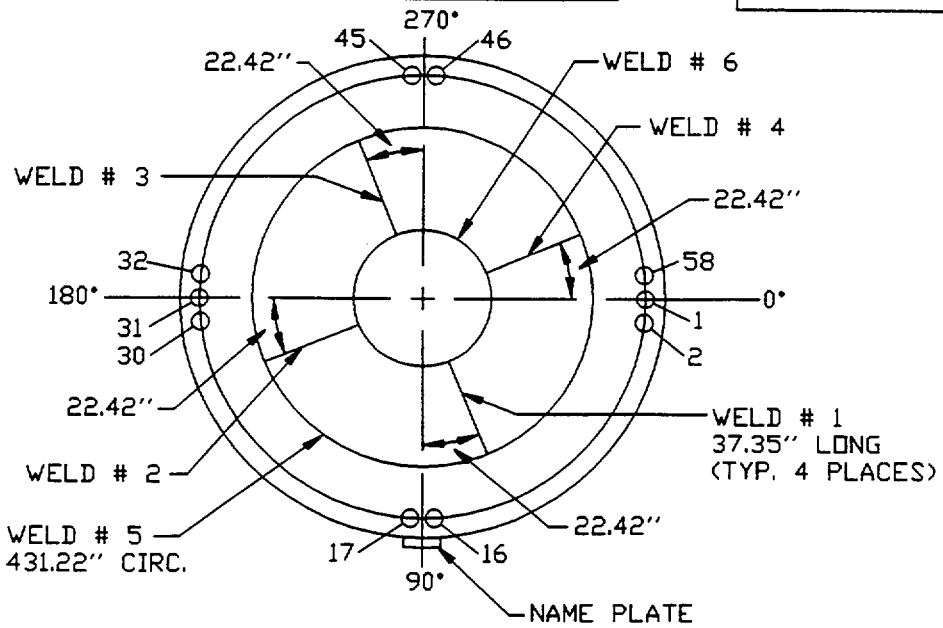

CLOSURE HEAD WELDS

WELDS #1 - #4: CLOSURE HEAD MERIDIONAL WELDS LOCATED 22.42" CCW FROM 0°-90°-180°-270° HEAD AXIS ON THE R.V. STUD BOLT CIRCLE.

WELD #5: DATUM FOR WELD LENGTH IS CENTERLINE OF STUD HOLE #1.

WELD #6: NOT ACCESSIBLE.

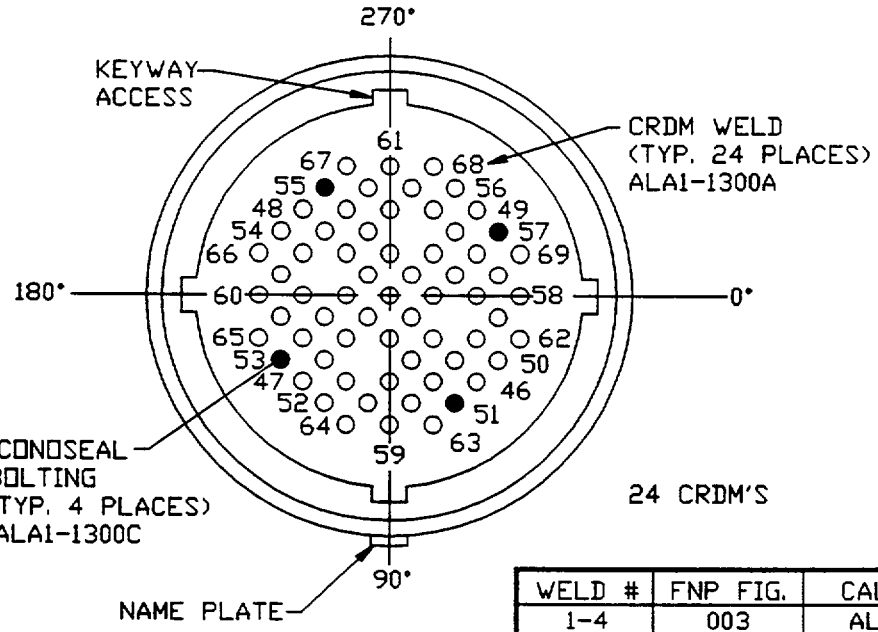

WELD #	FNP FIG.	CAL. BLOCK
1-4	003	ALA RV-3

REV.	DATE	BY	CHK'D	DESCRIPTION	APPR.1	APPR.2	APPR.3	APPR.4
1	3-26-98	RAW	JAR	REVISED PER REA 96-1295, REV.0	LDT			
0	6-30-92	SDH	JAR	ISSUED PER PCN S-92-1-8162	CAB	CCM FOR VRH	AH	DML

Southern Company Services, Inc. for REACTOR VESSEL

ALABAMA POWER COMPANY
JOSEPH M. FARLEY NUCLEAR PLANT
UNIT 1

SCS DRAWING NUMBER	SHEET	REV.
A-351192	7	1

CAD AUTOCAD ALA11300 RAV-02

ALA1-1300A

CRDM HOUSING WELDS

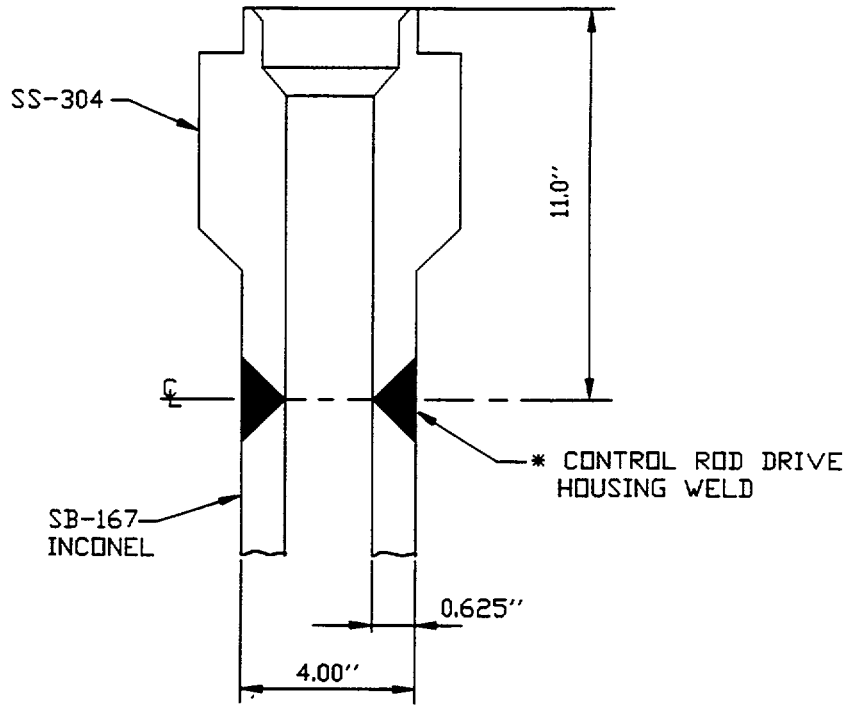

CLOSURE HEAD WELDS

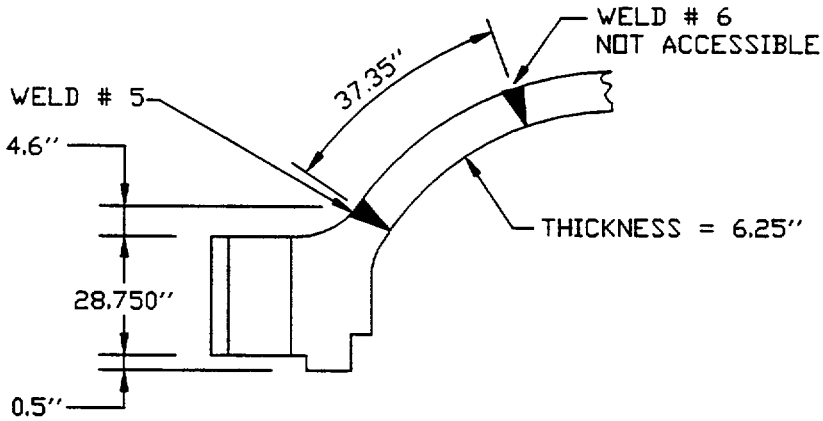

WELD #	FNP FIG.	CAL. BLOCK
* 1 THRU 69	022	N/A
5	005	ALA RV-3
6	003	ALA RV-3

REV.	DATE	BY	CHK'D	DESCRIPTION	APPR.1	APPR.2	APPR.3	APPR.4
1	3-26-98	RAW	JAR	REVISED PER REA 96-1295, REV. 0	LDT	DLG DEV CCM for WRH		
0	6-30-92	SDH	JAR	ISSUED PER PCN S-92-1-8162.	CAB		AH	DML

CAD AUTOCAD ALA1300A RAV-02

Southern Company Services, Inc. for REACTOR VESSEL

ALABAMA POWER COMPANY
JOSEPH M. FARLEY NUCLEAR PLANT
UNIT 1

SCS DRAWING NUMBER	SHEET	REV.
A-351192	8	1

ALA1-1300B

REACTOR VESSEL STUDS, NUTS, AND WASHERS

58 STUDS AND NUTS

58 WASHER SETS (2)

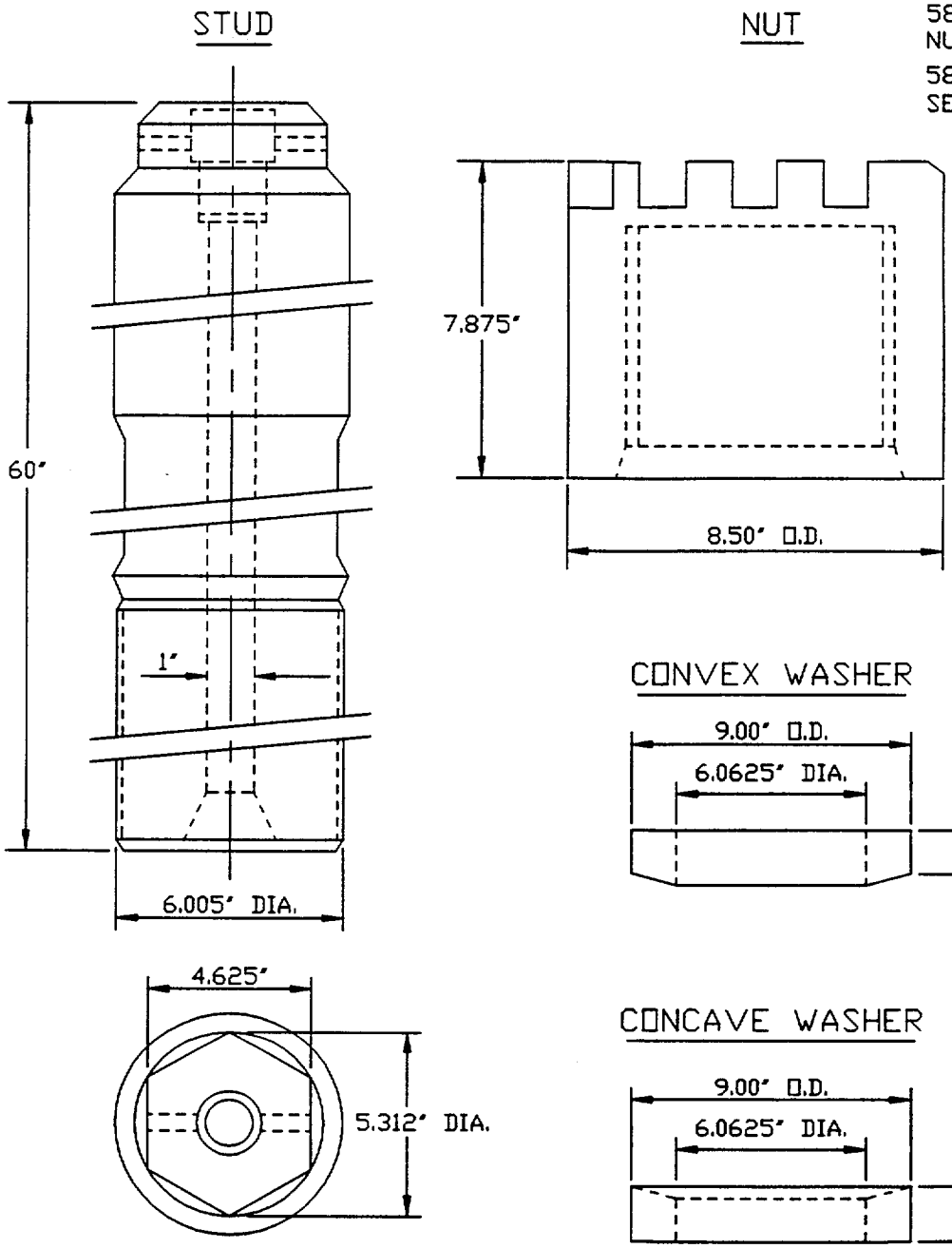

ITEM	FNP FIG.	CAL. BLOCK
STUDS 1-58	016	ALA-36

REV.	DATE	BY	CHK'D	DESCRIPTION	APPR.1	APPR.2	APPR.3	APPR.4
1	3-26-98	RAW	JAR	REVISED PER REA 96-1295, REV. 0	LDT	DLG DEV CCM for WRH		
0	6-30-92	SDH	JAR	ISSUED PER PCN S-92-1-8162.	CAB		AH	DML

Southern Company Services, Inc. for REACTOR VESSEL

ALABAMA POWER COMPANY
JOSEPH M. FARLEY NUCLEAR PLANT
UNIT 1

SCS DRAWING NUMBER	SHEET	REV.
A-351192	9	1

CAD AUTOCAD ALA1300B RAV-02

ALA1-1300C

REACTOR VESSEL CLOSURE HEAD
CONOSEAL BOLTING

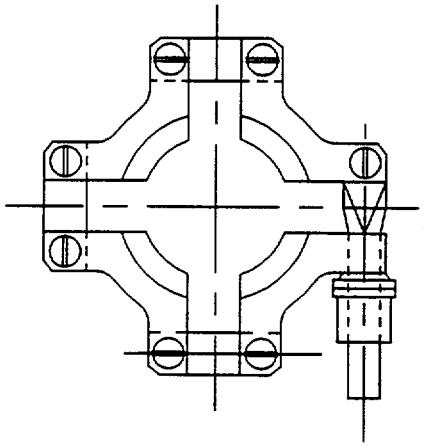

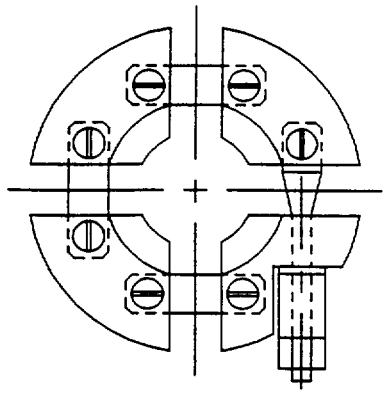

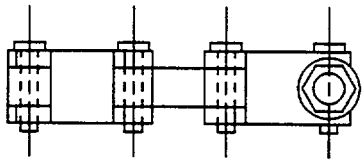

LOWER CLAMP

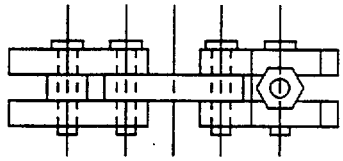

UPPER CLAMP

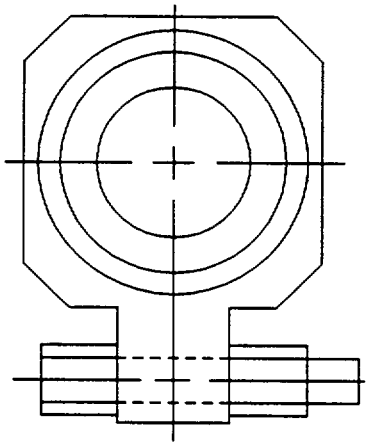

UPPER POSITIONER

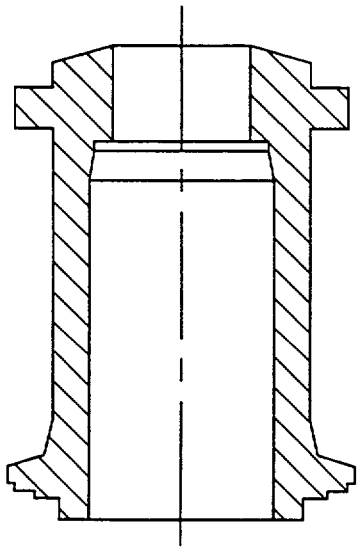

MALE FLANGE

ASSEMBLIES	BOLTED UNITS PER ASSEMBLY	NO. BOLTS PER UNIT	TOTAL NO. BOLTS
4	3	1	12

REV.	DATE	BY	CHK'D	DESCRIPTION	APPR.1	APPR.2	APPR.3	APPR.4
1	3-26-98	RAW	JAR	REVISED PER REA 96-1295, REV. 0	LDT	DLG DEV		
0	6-30-92	SDH	JAR	ISSUED PER PCN S-92-1-8162.	CAB	CCW for WRH	AH	DML

Southern Company Services, Inc. for

ALABAMA POWER COMPANY
JOSEPH M. FARLEY NUCLEAR PLANT
UNIT 1

REACTOR VESSEL

SCS DRAWING NUMBER	SHEET	REV.
A-351192	10	1

CAD AUTOCAD ALA1300C RAW-02

Farley Nu[illegible] .ant
Visual Examination Record VT-1

SHARED

FNP-0-[illegible] 100.21
Southern Nuclear Operating Company

Plant / Unit	Line Number/Examination Area/Weld No.	Drawing Number	Sheet Number
Farley / 1	ALA1-1300-PEN 53 CRD HOUSING BOLTING	ALA1-1300	S01F1V105

Photos	Sketch	Resolution	Technique	
☐ Yes ☐ B/W ☑ No ☐ Color	☑ Yes ☐ No	☑ 1/32" Division (Scale) ☑ 1/32" Line (Gray Card)	☑ Direct ☐ Video ☐ Remote	WO / WA N/A Procedure No. FNP-0-NDE-100.21 Revision No. 1.0 / N/A

Equipment	Lighting	Tools		
☐ Mirror ☑ N/A ☐ Magnifier ☐ CCTV	☐ Ambient ☑ Flashlight ☐ Droplight	☐ Scale ☐ Depth Gauge ☐ Level ☐ Micrometer ☐ Comparator ☑ N/A ☐ Caliper ☐ Weld Gauge ☐		

Examiner/Initial Sig.	Level
John W. Bell	III
James F. Halley	III

Date (Month-Day-Year) 10/16/01

☐ WELDS AND BASE MATERIAL VT-1	SAT	*UN-SAT	N/A
Ground Blend Material	☐	☐	☑
Undercut	☐	☐	☑
Corrosion Build-up	☐	☐	☑
Gouges	☐	☐	☑
Evidence of Leakage	☐	☐	☑
Arc Strikes	☐	☐	☑
Cracks	☐	☐	☑
Other**	☐	☐	☑

* Provide details on unsat areas by use of supplemental data sheet.
** Provide details on other areas examined

☑ BOLTS, STUDS, AND WASHERS VT-1	SAT	*UN-SAT	N/A
Loose Members	☑	☐	☐
Cracks	☑	☐	☐
Corrosion	☑	☐	☐
Gouges	☑	☐	☐
Thread Damage	☑	☐	☐
Deformation	☑	☐	☐
Protective Coating	☑	☐	☐
Evidence of Leakage	☐	☐	☑
Other **	☐	☐	☑

Comments N/A

	ANII Review	Date 10/18/01
Reviewed By	Level III	Date 10-17-01

Revision 1.0

Farley Nuclear Plant
Liquid Penetrant Examination Record

SHARED

FNP-0-NDE-100.5
PT-F-FORM 001
Southern Nuclear Operating Company

Unit	Component Number	Procedure/Rev./TCN	Sheet No.
1	ALA1-1300-55	FNP-0-NDE-100.5 / 6.0 / N/A	S01F1P005 Page 1 of 1

Thermometer

Mfg/Ser. No. PTC / 43619
Cal. Due Date 2/25/02
Surface Temp. 88 o F

Manufacturer Magnaflux

Penetrant Materials

	Type	Batch
Cleaner / Remover	SKC-S	99J01K
Penetrant	SKL-SP	96J02K
Developer	SKD-S2	98D11K

Component Configuration: CRD HOUSING WELDS

% of Length Coverage 100%
% of Area Coverage 100% JEW 10-17-01
Date 10/13/01

Ind. No.	Results	Dwell Time	Indication Desc. / Exam Limitations / etc.	Remarks
N/A	NI	12	N/A	NONE

Primary Examiner	ASNT Level	Initials	Assistant Examiner	ASNT Level	Initials	Non-Technical Review	Date
John W. Bell	II	JWB	N/ A	N/A		Lynda Duke	10-17-01

SNC NDE Level II/III Review		Date	Percentage of Code Coverage	ANII Review	Date
J. Eric Aycock	L-III	10-17-01	100%	CG Wand	10/18/01

Revision 6.

SHARED

Farley Nuclear Plant
Ultrasonic Calibration and Examination Record

FNP-0-NDE-100.39
Southern Nuclear Operating Company

Unit	Sketch/Component Number	Date	Sheet No.
1	ALA1-1300-S20	10/13/01	S01F1U029 Page 1 of 1

Procedure/Rev./TCN	Couplant/Batch No.	ThermometerSN/Cal Due Date	Linearity Sheet No.
FNP-0-NDE-100.39 / 4.0 / N/A	Ultragel II / ~~00125~~ 01125 10-14-01	43619 2/25/02	S01F1L001

Instrument		Search Unit		Calibration Block	
Make/Model	Staveley / SONIC 136	Transducer Mfg.	Harisonic	Cal. Blk. No.	ALA-36
Serial No.	136-911K	Serial No.	4890	Thickness	55.75
		Model No.	A10	Cal. Temp	75 °F
	Ax dB / Circ dB	Size / No.	.5	Shape / Round	Cal. In 8:30:00 AM
Reference	36.8 / 65.4	Frequency/Mode	10 / Long.		Cal. Chk. 0940
Scanning	48.8 / 77.4	"A" Dimension	N/A		Cal. Out 10:12:00 AM
Pulser	50 ns	Nom Angle	0°	Meas Angle 0	Ref. Blk. No. 796478
Frequency	10	Rep Rate	(1)(2)		Reflector/dB BR / Ref
Mode	LONG	Filter	2	Cable Type /No. Conn.	RG58/0 /
Damping	500 O	Reject	OFF	Cable Length	N/A
					Amp/Sweep *20 % 6

Axial Scans Calibration				Circ Scans Calibration			
Cal. Refl.	Signal Amp.	Sweep Div.	Wmax	Cal. Refl.	Signal Amp.	Sweep Div.	Wmax
NEAR (1)							
NOTCH	80%	1.5	N/A	N/A			
FAR (2)							
NOTCH	80%	7.8	N/A	N/A			

Calibration Remarks:
(1) ZONE 1 - PRR - 1khz
(2) ZONE 2 - PRR - 250 Hz
10-14-01

Comp Temp.	Configuration -	Wo Loc.	Lo Loc.
75 °F	REACTOR VESSEL STUDS	N/A	TOP OF STUD

Scan Dir.	Results NI	NRI	RI	Ind No.	% DAC	Length L1	Lmax	L2	Ref. Measurements Wmax	Smax	Thickness 1"<--	C/L	-->1"	Notes:
0	◉	○	○											

Examination/Limitation Remarks: AXIAL dB equals ZONE 1 for Cal. Circ dB equals ZONE 2 for cal.
*ZONE 1 Amp/Sweep: 40% / 10

Total Length of Weld	Crown Width	Total Length of Weld Examined	Extent of Perpendicular Scans (W)	Extent of Parallel Scans (L)
NA	NA	5 (L) NA 2 (L) NA 7 and 8 (W) NA	5- From NA to NA 2- From NA to NA	From (5) NA to (2) NA

Primary Examiner	Level	Initials	Assistant Examiner	Level	Initials	Non-Technical Review	Date
George Morini	II	GM	N/A	N/A		Darryl Griffin	10-14-01

SNC NDE Level II/III Review		Date	Percentage of Code Coverage	ANII Review	Date
Darryl Griffin	III	10-14-01	100	C G Wood	10/14/01

Revision 4.0

SHARED

Farley Nuclear Plant
Ultrasonic Calibration and Examination Record

FNP-0-NDE-100.39
Southern Nuclear Operating Company

Unit	Sketch/Component Number	Date	Sheet No.
1	ALA1-1300-S21	10/13/01	S01F1U032 Page 1 of 1

Procedure/Rev./TCN	Couplant/Batch No.	ThermometerSN/Cal Due Date	Linearity Sheet No.
FNP-0-NDE-100.39 / 4.0 / N/A	Ultragel II / 01125	43619 Oct. 25 c. 2	S01F1L001

Instrument

Make/Model	Staveley / SONIC 136	
Serial No.	136-911K	
	Ax dB	Circ dB
Reference	36.8	65.4
Scanning	48.8	77.4
Pulser	50 ns	
Frequency	10	Rep Rate (1)(2)
Mode	LONG	Filter 2
Damping	500 O	Reject OFF

Search Unit

Transducer Mfg.	Harisonic		
Serial No.	4890		
Model No.	A10		
Size / No.	.5	Shape /	Round
Frequency/Mode	10 / Long.		
"A" Dimension	N/A		
Nom Angle	0°	Meas Angle	0
Cable Type /No. Conn.	RG58/0 /		
Cable Length	N/A		

Calibration Block

Cal. Blk. No.	ALA-36	
Thickness	55.75	
Cal. Temp	75	°F
Cal. In	8:30:00 AM	
Cal. Chk.	0937	
Cal. Out	10:12:00 AM	
Ref. Blk. No.	796478	
Reflector/dB	BR	/ Ref
Amp/Sweep	*20	% 6

Axial Scans Calibration

Cal. Refl.	Signal Amp.	Sweep Div.	Wmax
NEAR (1)			
NOTCH	80%	1.5	N/A
FAR (2)			
NOTCH	80%	7.8	N/A

Circ Scans Calibration

Cal. Refl.	Signal Amp.	Sweep Div.	Wmax
N/A			
N/A			

Calibration Remarks:
(1) ZONE 1 - PRR - 1khz
(2) ZONE 2 - PRR - 250 Hz
10-14-01

Comp Temp.	Configuration -	Wo Loc.	Lo Loc.
75 °F	REACTOR VESSEL STUDS	N/A	TOP OF STUD

Scan Dir.	Results NI	NRI	RI	Ind No.	% DAC	Length L1	Lmax	L2	Ref. Measurements Wmax	Smax	Thickness 1"<–	C/L	–>1"
0	◉	○	○										

Notes:

Examination/Limitation Remarks: Axial dB equals ZONE 1for Cal; Circ dB equals ZONE 2 for Cal.
*ZONE 1 Amp/Sweep: 40% / 10

Total Length of Weld	Crown Width	Total Length of Weld Examined	Extent of Perpendicular Scans (W)	Extent of Parallel Scans (L)
NA	NA	5 (L) NA 2 (L) NA 7 and 8 (W) NA	5- From NA to NA 2- From NA to NA	From (5) NA to (2) NA

Primary Examiner	Level	Initials	Assistant Examiner	Level	Initials	Non-Technical Review	Date
George Morini	II		N/ A	N/A			10-14-01

SNC NDE Level II/III Review		Date	Percentage of Code Coverage	ANII Review	Date
	III	10-14-01	100		10/14/01

Revision 4.0

SHARED

Farley Nuclear Plant
Ultrasonic Calibration and Examination Record

FNP-0-NDE-100.39
Southern Nuclear Operating Company

Unit	Sketch/Component Number	Date	Sheet No.	
1	ALA1-1300-S22	10/13/01	S01F1U033	Page 1 of 1

Procedure/Rev./TCN	Couplant/Batch No.	ThermometerSN/Cal Due Date	Linearity Sheet No.
FNP-0-NDE-100.39 / 4.0 / N/A	Ultragel II / 01125	43619 02-25-02	S01F1L001

Instrument		Search Unit		Calibration Block	
Make/Model	Staveley / SONIC 136	Transducer Mfg.	Harisonic	Cal. Blk. No.	ALA-36
Serial No.	136-911K	Serial No.	4890	Thickness	55.75
		Model No.	A10	Cal. Temp	75 °F
		Size / No.	.5	Cal. In	8:30:00 AM
		Frequency/Mode	10 / Long.	Cal. Chk.	0933
		"A" Dimension	N/A	Cal. Out	10:12:00 AM
		Nom Angle	0°	Ref. Blk. No.	796478
		Cable Type /No. Conn.	RG58/0 /	Reflector/dB	BR / Ref
		Cable Length	N/A	Amp/Sweep	*20 % 6

	Ax dB	Circ dB
Reference	36.8	65.4
Scanning	48.8	77.4
Pulser	50 ns	
Frequency	10	Rep Rate (1)(2)
Mode	LONG	Filter 2
Damping	500 O	Reject OFF

Axial Scans Calibration

	Cal. Refl.	Signal Amp.	Sweep Div.	Wmax
NEAR (1)				
NOTCH	80%	1.5	N/A	
FAR (2)				
NOTCH	80%	7.8	N/A	

Circ Scans Calibration

Cal. Refl.	Signal Amp.	Sweep Div.	Wmax
N/A			
N/A			

Calibration Remarks:
(1) ZONE 1 - PRR - 1khz
(2) ZONE 2 - PRR - 250 Hz
Dal 10-14-01

Comp Temp.	Configuration -	Wo Loc.	Lo Loc.
75 °F	REACTOR VESSEL STUDS	N/A	TOP OF STUD

Scan Dir.	Results NI	NRI	RI	Ind No.	% DAC	Length L1	Lmax	L2	Ref. Measurements Wmax	Smax	Thickness 1"<-	C/L	->1"	Notes:
0	◉	○	○											

Examination/Limitation Remarks: AXIAL dB equals ZONE 1 for Cal; CIRC dB equals ZONE 2 for Cal
*ZONE 1 Amp/Sweep 40% / 10

Total Length of Weld	Crown Width	Total Length of Weld Examined	Extent of Perpendicular Scans (W)	Extent of Parallel Scans (L)
NA	NA	5 (L) NA 2 (L) NA 7 and 8 (W) NA	5- From NA to NA 2- From NA to NA	From (5) NA to (2) NA

Primary Examiner	Level	Initials	Assistant Examiner	Level	Initials	Non-Technical Review	Date
George Morini	II	[illegible]	N/A	N/A		[illegible]	10-14-01

SNC NDE Level II/III Review		Date	Percentage of Code Coverage	ANII Review	Date
[illegible]	III	10-14-01	100	[illegible]	10/14/01

Revision 4.0

SHARED

Farley Nuclear Plant
Ultrasonic Calibration and Examination Record

FNP-0-NDE-100.39
Southern Nuclear Operating Company

Unit	Sketch/Component Number	Date	Sheet No.
1	ALA1-1300-S23	10/13/01	S01F1U034 Page 1 of 1

Procedure/Rev./TCN	Couplant/Batch No.	ThermometerSN/Cal Due Date	Linearity Sheet No.
FNP-0-NDE-100.39 / 4.0 / N/A	Ultragel II / 01125	43619 10.12.01 02.25.02	S01F1L001

Instrument		Search Unit		Calibration Block	
Make/Model	Staveley / SONIC 136	Transducer Mfg.	Harisonic	Cal. Blk. No.	ALA-36
Serial No.	136-911K	Serial No.	4890	Thickness	55.75
		Model No.	A10	Cal. Temp	75 °F
	Ax dB / Circ dB	Size / No.	.5 / Shape / Round	Cal. In	8:30:00 AM
Reference	36.8 / 65.4	Frequency/Mode	10 / Long.	Cal. Chk.	0927
Scanning	48.8 / 77.4	"A" Dimension	N/A	Cal. Out	10:12:00 AM
Pulser	50 ns	Nom Angle	0° / Meas Angle 0	Ref. Blk. No.	796478
Frequency	10 / Rep Rate (1)(2)	Cable Type /No. Conn.	RG58/0 /	Reflector/dB	BR / Ref
Mode	LONG / Filter 2	Cable Length	N/A	Amp/Sweep	*20 % 6
Damping	500 O / Reject OFF				

Axial Scans Calibration

Cal. Refl.	Signal Amp.	Sweep Div.	Wmax
NEAR (1)			
NOTCH	80%	1.5	N/A
FAR (2)			
NOTCH	80%	7.8	N/A

Circ Scans Calibration

Cal. Refl.	Signal Amp.	Sweep Div.	Wmax
N/A			
N/A			

Calibration Remarks:
(1) ZONE 1 - PRR - 1khz
(2) ZONE 2 - PRR - 250 Hz

Def 10-14-01

Comp Temp.	Configuration -	Wo Loc.	Lo Loc.
75 °F	REACTOR VESSEL STUDS	N/A	TOP OF STUD

Scan Dir.	Results NI	NRI	RI	Ind No.	% DAC	Length L1	Lmax	L2	Ref. Measurements Wmax	Smax	Thickness 1"<--	C/L	-->1"	Notes:
0	◉	○	○											

Examination/Limitation Remarks: AXIAL dB equals ZONE 1 for Cal; CIRC dB equals ZONE 2 for Cal
*ZONE 1 Amp/Sweep 40% / 10

Total Length of Weld	Crown Width	Total Length of Weld Examined	Extent of Perpendicular Scans (W)	Extent of Parallel Scans (L)
NA	NA	5 (L) NA 2 (L) NA 7 and 8 (W) NA	5- From NA to NA 2- From NA to NA	From (5) NA to (2) NA

Primary Examiner	Level	Initials	Assistant Examiner	Level	Initials	Non-Technical Review	Date
George Morini	II	GM	N/ A	N/A		[signature]	10-14-01

SNC NDE Level II/III Review		Date	Percentage of Code Coverage	ANII Review	Date
[signature]	III	10-14-01	100	[signature]	10/14/01

Revision 4.0

SHARED

Farley Nuclear Plant
Ultrasonic Calibration and Examination Record

FNP-0-NDE-100.39
Southern Nuclear Operating Company

Unit	Sketch/Component Number	Date	Sheet No.
1	ALA1-1300-S24	10/13/01	S01F1U035 Page 1 of 1

Procedure/Rev./TCN	Couplant/Batch No.	ThermometerSN/Cal Due Date	Linearity Sheet No.
FNP-0-NDE-100.39 / 4.0 / N/A	Ultragel II / 01125	43619 Mar 25 02	S01F1L001

Instrument			Search Unit		Calibration Block	
Make/Model	Staveley / SONIC 136		Transducer Mfg.	Harisonic	Cal. Blk. No.	ALA-36
Serial No.	136-911K		Serial No.	4890	Thickness	55.75
	Ax dB	Circ dB	Model No.	A10	Cal. Temp	75 °F
Reference	36.8	65.4	Size / No.	.5	Shape / Round	Cal. In 8:30:00 AM
Scanning	48.8	77.4	Frequency/Mode	10 / Long.	Cal. Chk.	0923
Pulser	50 ns		"A" Dimension	N/A	Cal. Out	10:12:00 AM
Frequency	10	Rep Rate (1)(2)	Nom Angle 0°	Meas Angle 0	Ref. Blk. No.	796478
Mode	LONG	Filter 2	Cable Type /No. Conn.	RG58/0 /	Reflector/dB	BR / Rof
Damping	500 O	Reject OFF	Cable Length	N/A	Amp/Sweep	*20 % 6

Axial Scans Calibration				Circ Scans Calibration			
Cal. Refl.	Signal Amp.	Sweep Div.	Wmax	Cal. Refl.	Signal Amp.	Sweep Div.	Wmax
NEAR (1)							
NOTCH	80%	1.5	N/A	N/A			
FAR (2)							
NOTCH	80%	7.8	N/A	N/A			

Calibration Remarks:
(1) ZONE 1 - PRR - 1khz
(2) ZONE 2 - PRR - 250 Hz
10-14-01

Comp Temp.	Configuration -	Wo Loc.	Lo Loc.
75 °F	REACTOR VESSEL STUDS	NA	TOP OF STUD

Scan Dir.	Results NI	NRI	RI	Ind No.	% DAC	Length L1	Lmax	L2	Ref. Measurements Wmax	Smax	Thickness 1"<--	C/L	-->1"	Notes:
0	◉	○	○											

Examination/Limitation Remarks: AXIAL dB equals ZONE 1 for Cal; CIRC dB equals ZONE 2 for Cal
*ZONE 1 Amp/Sweep 40% / 10

Total Length of Weld	Crown Width	Total Length of Weld Examined	Extent of Perpendicular Scans (W)	Extent of Parallel Scans (L)
NA	NA	5 (L) NA 2 (L) NA 7 and 8 (W) NA	5- From NA to NA 2- From NA to NA	From (5) NA to (2) NA

Primary Examiner	Level	Initials	Assistant Examiner	Level	Initials	Non-Technical Review	Date
George Morini	II	GM	N/A	N/A		Darryl Griffin	10-14-01

SNC NDE Level II/III Review		Date	Percentage of Code Coverage	ANII Review	Date
Darryl Griffin	III	10-14-01	100	[illegible]	10/14/01

Revision 4.0

SHARED

Farley Nuclear Plant
Ultrasonic Calibration and Examination Record

FNP-0-NDE-100.39
Southern Nuclear Operating Company

Unit	Sketch/Component Number	Date	Sheet No.
1	ALA1-1300-S25	10/13/01	S01F1U036 Page 1 of 1

Procedure/Rev./TCN	Couplant/Batch No.	ThermometerSN/Cal Due Date	Linearity Sheet No.
FNP-0-NDE-100.39 / 4.0 / N/A	Ultragel II / 01125	43619 ~~Apr-10-01~~ 02-25-02	S01F1L001

Instrument

Make/Model Staveley / SONIC 136
Serial No. 136-911K

	Ax dB	Circ dB
Reference	36.8	65.4
Scanning	48.8	77.4
Pulser	50 ns	

Frequency 10 Rep Rate (1)(2)
Mode LONG Filter 2
Damping 500 O Reject OFF

Search Unit

Transducer Mfg. Harisonic
Serial No. 4890
Model No. A10
Size / No. .5 Shape / Round
Frequency/Mode 10 / Long.
"A" Dimension N/A
Nom Angle 0° Meas Angle 0
Cable Type /No. Conn. RG58/0 /
Cable Length N/A

Calibration Block

Cal. Blk. No. ALA-36
Thickness 55.75
Cal. Temp 75 °F
Cal. In 8:30:00 AM
Cal. Chk. 0920
Cal. Out 10:12:00 AM
Ref. Blk. No. 796478
Reflector/dB BR / Ref.
Amp/Sweep *20 % 6

Axial Scans Calibration

Cal. Refl.	Signal Amp.	Sweep Div.	Wmax
NEAR (1)			
NOTCH	80%	1.5	N/A
FAR (2)			
NOTCH	80%	7.8	N/A

Circ Scans Calibration

Cal. Refl.	Signal Amp.	Sweep Div.	Wmax
N/A			
N/A			

Calibration Remarks:
(1) ZONE 1 - PRR - 1khz
(2) ZONE 2 - PRR - 250 Hz

Comp Temp. 75 °F | Configuration - REACTOR VESSEL STUDS | Wo Loc. NA | Lo Loc. TOP OF STUD

Scan Dir.	Results NI	NRI	RI	Ind No.	% DAC	Length L1	Lmax	L2	Ref. Measurements Wmax	Smax	Thickness 1"<–	C/L	–>1"	Notes:
0	◉	○	○											

Examination/Limitation Remarks: AXIAL dB equals ZONE 1 for cal; CIRC dB equals ZONE 2 for cal.
*Zone 1 Amp/Sweep 40% / 10

Total Length of Weld	Crown Width	Total Length of Weld Examined	Extent of Perpendicular Scans (W)	Extent of Parallel Scans (L)
NA	NA	5 (L) NA 2 (L) NA 7 and 8 (W) NA	5- From NA to NA 2- From NA to NA	From (5) NA to (2) NA

Primary Examiner	Level	Initials	Assistant Examiner	Level	Initials	Non-Technical Review	Date
George Morini	II	GM	N/ A	N/A		Darryl Lofftus	10-14-01

SNC NDE Level II/III Review		Date	Percentage of Code Coverage	ANII Review	Date
Darryl Lofftus	III	10-14-01	100	C G Ward	10/14/01

Revision 4.0

SHARED

Farley Nuclear Plant
Ultrasonic Calibration and Examination Record

FNP-0-NDE-100.39
Southern Nuclear Operating Company

Unit	Sketch/Component Number	Date	Sheet No.	
1	ALA1-1300-S26	10/13/01	S01F1U037	Page 1 of 1

Procedure/Rev./TCN	Couplant/Batch No.	ThermometerSN/Cal Due Date	Linearity Sheet No.
FNP-0-NDE-100.39 / 4.0 / N/A	Ultragel II / 01125	43619 Jun 15 12 01 02.25.02	S01F1L001

Instrument

Make/Model	Staveley / SONIC 136	
Serial No.	136-911K	
	Ax dB	Circ dB
Reference	36.8	65.4
Scanning	48.8	77.4
Pulser	50 ns	
Frequency	10	Rep Rate (1)(2)
Mode	LONG	Filter 2
Damping	500 O	Reject OFF

Search Unit

Transducer Mfg.	Harisonic		
Serial No.	4890		
Model No.	A10		
Size / No.	.5	Shape /	Round
Frequency/Mode	10 / Long.		
"A" Dimension	N/A		
Nom Angle	0°	Meas Angle	0
Cable Type /No. Conn.	RG58/0 /		
Cable Length	N/A		

Calibration Block

Cal. Blk. No.	ALA-36	
Thickness	55.75	
Cal. Temp	75	°F
Cal. In	8:30:00 AM	
Cal. Chk.	0916	
Cal. Out	10:12:00 AM	
Ref. Blk. No.	796478	
Reflector/dB	BR /	Ref.
Amp/Sweep	*20 %	6

Axial Scans Calibration

Cal. Refl.	Signal Amp.	Sweep Div.	Wmax
NEAR (1)			
NOTCH	80%	1.5	N/A
FAR (2)			
NOTCH	80%	7.8	N/A

Circ Scans Calibration

Cal. Refl.	Signal Amp.	Sweep Div.	Wmax
N/A			
N/A			

Calibration Remarks:
(1) ZONE 1 - PRR - 1khz
(2) ZONE 2 - PRR - 250 Hz

Comp Temp.	Configuration -	Wo Loc.	Lo Loc.
75 °F	REACTOR VESSEL STUDS	NA	TOP OF STUD

Scan Dir.	Results NI	NRI	RI	Ind No.	% DAC	Length L1	Lmax	L2	Ref. Measurements Wmax	Smax	Thickness 1"<-	C/L	->1"	Notes:
0	◉	○	○											

Examination/Limitation Remarks: AXIAL dB equals ZONE 1 for Cal; CIRC dB equals ZONE 2 for Cal.
*ZONE 1 Amp/Sweep 40% / 10

Total Length of Weld	Crown Width	Total Length of Weld Examined	Extent of Perpendicular Scans (W)	Extent of Parallel Scans (L)
NA	NA	5 (L) NA 2 (L) NA 7 and 8 (W) NA	5- From NA to NA 2- From NA to NA	From (5) NA to (2) NA

Primary Examiner	Level	Initials	Assistant Examiner	Level	Initials	Non-Technical Review	Date
George Morini	II	GM	N/ A	N/A		Gary A. Loftus	10-14-01

SNC NDE Level II/III Review		Date	Percentage of Code Coverage	ANII Review	Date
Gary A. Loftus	III	10-14-01	100	C G Ward	10/14/01

Revision 4.0

SHARED

Farley Nuclear Plant
Ultrasonic Calibration and Examination Record

FNP-0-NDE-100.39
Southern Nuclear Operating Company

Unit	Sketch/Component Number	Date	Sheet No.
1	ALA1-1300-S27	10/13/01	S01F1U038 Page 1 of 1

Procedure/Rev./TCN	Couplant/Batch No.	ThermometerSN/Cal Due Date	Linearity Sheet No.
FNP-0-NDE-100.39 / 4.0 / N/A	Ultragel II / 01125	43619	S01F1L001

Instrument			Search Unit		Calibration Block	
Make/Model	Staveley / SONIC 136		Transducer Mfg.	Harisonic	Cal. Blk. No.	ALA-36
Serial No.	136-911K		Serial No.	4890	Thickness	55.75
	Ax dB	Circ dB	Model No.	A10	Cal. Temp	75 °F
Reference	36.8	65.4	Size / No.	.5	Shape / Round	Cal. In 8:30:00 AM
Scanning	48.8	77.4	Frequency/Mode	10 / Long.	Cal. Chk.	0912
Pulser	50 ns		"A" Dimension	N/A	Cal. Out	10:12:00 AM
Frequency	10	Rep Rate (1)(2)	Nom Angle	0°	Meas Angle 0	Ref. Blk. No. 796478
Mode	LONG	Filter 2	Cable Type /No. Conn.	RG58/0 /		Reflector/dB BR / Ref.
Damping	500 O	Reject OFF	Cable Length	N/A		Amp/Sweep *20 % 6

Axial Scans Calibration

Cal. Refl.	Signal Amp.	Sweep Div.	Wmax
NEAR (1)			
NOTCH	80%	1.5	N/A
FAR (2)			
NOTCH	80%	7.8	N/A

Circ Scans Calibration

Cal. Refl.	Signal Amp.	Sweep Div.	Wmax
N/A			
N/A			

Calibration Remarks:
(1) ZONE 1 - PRR - 1khz
(2) ZONE 2 - PRR - 250 Hz

Comp Temp.	Configuration -	Wo Loc.	Lo Loc.
75 °F	REACTOR VESSEL STUDS	NA	TOP OF STUD

Scan Dir.	Results NI	NRI	RI	Ind No.	% DAC	Length L1	Lmax	L2	Ref. Measurements Wmax	Smax	Thickness 1"<–	C/L	–>1"	Notes:
0	◉	○	○											

Examination/Limitation Remarks: AXIAL dB equals ZONE 1 for Cal.; CIRC dB equals ZONE 2 for Cal.
*ZONE 1 Amp/Sweep 40% / 10

Total Length of Weld	Crown Width	Total Length of Weld Examined	Extent of Perpendicular Scans (W)	Extent of Parallel Scans (L)
NA	NA	5 (L) NA 2 (L) NA 7 and 8 (W) NA	5- From NA to NA 2- From NA to NA	From (5) NA to (2) NA

Primary Examiner	Level	Initials	Assistant Examiner	Level	Initials	Non-Technical Review	Date
George Morini	II		N/ A	N/A			10-14-01

SNC NDE Level II/III Review		Date	Percentage of Code Coverage	ANII Review	Date
	III	10-14-01	100		10/14/01

Revision 4.0

SHARED

Farley Nuclear Plant
Ultrasonic Calibration and Examination Record

FNP-0-NDE-100.39
Southern Nuclear Operating Company

Unit	Sketch/Component Number	Date	Sheet No.
1	ALA1-1300-S28	10/13/01	S01F1U039 Page 1 of 1

Procedure/Rev./TCN	Couplant/Batch No.	ThermometerSN/Cal Due Date	Linearity Sheet No.
FNP-0-NDE-100.39 / 4.0 / N/A	Ultragel II / 01125	43619 02 25 02	S01F1L001

Instrument		Search Unit		Calibration Block	
Make/Model	Staveley / SONIC 136	Transducer Mfg.	Harisonic	Cal. Blk. No.	ALA-36
Serial No.	136-911K	Serial No.	4890	Thickness	55.75
		Model No.	A10	Cal. Temp	75 °F
	Ax dB / Circ dB	Size / No.	.5	Shape / Round	Cal. In 8:30:00 AM
Reference	36.8 / 65.4	Frequency/Mode	10 / Long.	Cal. Chk.	0855
Scanning	48.8 / 77.4	"A" Dimension	N/A	Cal. Out	10:12:00 AM
Pulser	50 ns	Nom Angle	0°	Meas Angle 0	Ref. Blk. No. 796478
Frequency	10	Rep Rate	(1)(2)	Cable Type /No. Conn.	RG58/0 / Reflector/dB BR / Ref
Mode	LONG	Filter	2	Cable Length	N/A Amp/Sweep *20 % 6
Damping	500 O	Reject	OFF		

Axial Scans Calibration

Cal. Refl.	Signal Amp.	Sweep Div.	Wmax
NEAR (1)			
NOTCH	80%	1.5	N/A
FAR (2)			
NOTCH	80%	7.8	N/A

Circ Scans Calibration

Cal. Refl.	Signal Amp.	Sweep Div.	Wmax
N/A			
N/A			

Calibration Remarks:
(1) ZONE 1 - PRR - 1khz
(2) ZONE 2 - PRR - 250 Hz

Dal 10-14-01

Comp Temp.	Configuration -	Wo Loc.	Lo Loc.
75 °F	REACTOR VESSEL STUDS	NA	TOP OF STUD

Scan Dir.	Results NI	NRI	RI	Ind No.	% DAC	Length L1	Lmax	L2	Ref. Measurements Wmax	Smax	Thickness 1"<--	C/L	-->1"	Notes:
0	◉	○	○											

Examination/Limitation Remarks: AXIAL dB equals ZONE 1 for Cal.; CIRC dB equals ZONE 2 for Cal.
*ZONE 1 Amp/Sweep 40% / 10

Total Length of Weld	Crown Width	Total Length of Weld Examined	Extent of Perpendicular Scans (W)	Extent of Parallel Scans (L)
NA	NA	5 (L) NA 2 (L) NA 7 and 8 (W) NA	5- From NA to NA 2- From NA to NA	From (5) NA to (2) NA

Primary Examiner	Level	Initials	Assistant Examiner	Level	Initials	Non-Technical Review	Date
George Morini	II		N/ A	N/A			10-14-01

SNC NDE Level II/III Review		Date	Percentage of Code Coverage	ANII Review	Date
	III	10-14-01	100		10/14/01

Revision 4.0

SHARED

Farley Nuclear Plant
Ultrasonic Calibration and Examination Record

FNP-0-NDE-100.39
Southern Nuclear Operating Company

Unit	Sketch/Component Number	Date	Sheet No.
1	ALA1-1300-S29	10/13/01	S01F1U040 Page 1 of 1

Procedure/Rev./TCN	Couplant/Batch No.	ThermometerSN/Cal Due Date	Linearity Sheet No.
FNP-0-NDE-100.39 / 4.0 / N/A	Ultragel II / 01125	43619 10-14-01 02-25-02	S01F1L001

Instrument		Search Unit		Calibration Block	
Make/Model	Staveley / SONIC 136	Transducer Mfg.	Harisonic	Cal. Blk. No.	ALA-36
Serial No.	136-911K	Serial No.	4890	Thickness	55.75
		Model No.	A10	Cal. Temp	75 °F
		Size / No.	.5	Cal. In	8:30:00 AM
		Frequency/Mode	10 / Long.	Cal. Chk.	0900
		"A" Dimension	N/A	Cal. Out	10:12:00 AM
		Nom Angle	0°	Ref. Blk. No.	796478
		Cable Type /No. Conn.	RG58/0 /	Reflector/dB	BR / Ref.
		Cable Length	N/A	Amp/Sweep	*20 % 6

	Ax dB	Circ dB
Reference	36.8	65.4
Scanning	48.8	77.4
Pulser	50 ns	
Frequency	10	Rep Rate (1)(2)
Mode	LONG	Filter 2
Damping	500 O	Reject OFF

Axial Scans Calibration				Circ Scans Calibration			
Cal. Refl.	Signal Amp.	Sweep Div.	Wmax	Cal. Refl.	Signal Amp.	Sweep Div.	Wmax
NEAR (1)							
NOTCH	80%	1.5	N/A	N/A			
FAR (2)							
NOTCH	80%	7.8	N/A	N/A			

Calibration Remarks:
(1) ZONE 1 - PRR - 1khz
(2) ZONE 2 - PRR - 250 Hz

Del 10-14-01

Comp Temp.	Configuration -	Wo Loc.	Lo Loc.
75 °F	REACTOR VESSEL STUDS	NA	TOP OF WELD

Scan Dir.	Results NI	NRI	RI	Ind No.	% DAC	Length L1	Lmax	L2	Ref. Measurements Wmax	Smax	Thickness 1"<-	C/L	->1"	Notes:
0	◉	○	○											

Examination/Limitation Remarks: AXIAL dB equals ZONE 1 for Cal.; CIRC dB equals ZONE 2 for Cal.
*ZONE 1 Amp/Sweep 40% / 10

Total Length of Weld	Crown Width	Total Length of Weld Examined	Extent of Perpendicular Scans (W)	Extent of Parallel Scans (L)
NA	NA	5 (L) NA 2 (L) NA 7 and 8 (W) NA	5- From NA to NA 2- From NA to NA	From (5) NA to (2) NA

Primary Examiner	Level	Initials	Assistant Examiner	Level	Initials	Non-Technical Review	Date
George Morini	II		N/ A	N/A		Gary A. Lofton	10-14-01

SNC NDE Level II/III Review		Date	Percentage of Code Coverage	ANII Review	Date
Gary A. Lofton	III	10-14-01	100	C G Ward	10/14/01

Revision 4.0

SHARED

Farley Nuclear Plant
Ultrasonic Calibration and Examination Record

FNP-0-NDE-100.39
Southern Nuclear Operating Company

Unit	Sketch/Component Number	Date	Sheet No.
1	ALA1-1300-S30	10/13/01	S01F1U041 Page 1 of 1

Procedure/Rev./TCN	Couplant/Batch No.	ThermometerSN/Cal Due Date	Linearity Sheet No.
FNP-0-NDE-100.39 / 4.0 / N/A	Ultragel II / 01125	43619 Expires 02-25-02	S01F1L001

Instrument

Make/Model: Staveley / SONIC 136
Serial No.: 136-911K

	Ax dB	Circ dB
Reference	36.8	65.4
Scanning	48.8	77.4
Pulser	50 ns	

Frequency 10 Rep Rate (1)(2)
Mode LONG Filter 2
Damping 500 O Reject OFF

Search Unit

Transducer Mfg. Harisonic
Serial No. 4890
Model No. A10
Size / No. .5 Shape / Round
Frequency/Mode 10 / Long.
"A" Dimension N/A
Nom Angle 0° Meas Angle 0
Cable Type /No. Conn. RG58/0 /
Cable Length N/A

Calibration Block

Cal. Blk. No. ALA-36
Thickness 55.75
Cal. Temp 75 °F
Cal. In 8:30:00 AM
Cal. Chk. 0905
Cal. Out 10:12:00 AM
Ref. Blk. No. 796478
Reflector/dB BR / Ref
Amp/Sweep *20 % 6

Axial Scans Calibration

	Cal. Refl.	Signal Amp.	Sweep Div.	Wmax
NEAR (1)				
NOTCH	80%	1.5	N/A	
FAR (2)				
NOTCH	80%	7.8	N/A	

Circ Scans Calibration

Cal. Refl.	Signal Amp.	Sweep Div.	Wmax
N/A			
N/A			

Calibration Remarks:
(1) ZONE 1 - PRR - 1khz
(2) ZONE 2 - PRR - 250 Hz

10-14-01

Comp Temp. 75 °F Configuration - REACTOR VESSEL STUDS Wo Loc. NA Lo Loc. TOP OF STUD

Scan Dir.	Results NI	NRI	RI	Ind No.	% DAC	Length L1	Lmax	L2	Ref. Measurements Wmax	Smax	Thickness 1"<-	C/L	->1"	Notes:
0	◉	○	○											

Examination/Limitation Remarks: AXIAL dB equals ZONE 1 for Cal.; CIRC dB equals ZONE 2 for Cal.
*ZONE 1 Amp/Sweep 40% / 10

Total Length of Weld NA Crown Width NA
Total Length of Weld Examined: 5 (L) NA 2 (L) NA 7 and 8 (W) NA
Extent of Perpendicular Scans (W): 5- From NA to NA 2- From NA to NA
Extent of Parallel Scans (L): From (5) NA to (2) NA

Primary Examiner	Level	Initials	Assistant Examiner	Level	Initials	Non-Technical Review	Date
George Morini	II		N/ A	N/A			10-14-01

SNC NDE Level II/III Review		Date	Percentage of Code Coverage	ANII Review	Date
	III	10-14-01	100		10/14/01

Revision 4.0

SHARED

Farley Nuclear Plant
Ultrasonic Calibration and Examination Record

FNP-0-NDE-100.39
Southern Nuclear Operating Company

Unit	Sketch/Component Number	Date	Sheet No.
1	ALA1-1300-S31	10/13/01	S01F1U042 Page 1 of 1

Procedure/Rev./TCN	Couplant/Batch No.	ThermometerSN/Cal Due Date	Linearity Sheet No.
FNP-0-NDE-100.39 / 4.0 / N/A	Ultragel II / 01125	43619 / 10.14.01 02.25.02	S01F1L001

Instrument

Make/Model	Staveley / SONIC 136	
Serial No.	136-911K	
	Ax dB	Circ dB
Reference	36.8	65.4
Scanning	48.8	77.4
Pulser	50 ns	
Frequency	10	Rep Rate (1)(2)
Mode	LONG	Filter 2
Damping	500 O	Reject OFF

Search Unit

Transducer Mfg.	Harisonic		
Serial No.	4890		
Model No.	A10		
Size / No.	.5	Shape /	Round
Frequency/Mode	10 / Long.		
"A" Dimension	N/A		
Nom Angle	0°	Meas Angle	0
Cable Type /No. Conn.	RG58/0 /		
Cable Length	N/A		

Calibration Block

Cal. Blk. No.	ALA-36		
Thickness			
Cal. Temp	75 °F		
Cal. In	8:30:00 AM		
Cal. Chk.	0909		
Cal. Out	10:12:00 AM		
Ref. Blk. No.	796478		
Reflector/dB	BR / Ref.		
Amp/Sweep	*20 % 6		

Def 10-14-01

Axial Scans Calibration				Circ Scans Calibration			
Cal. Refl.	Signal Amp.	Sweep Div.	Wmax	Cal. Refl.	Signal Amp.	Sweep Div.	Wmax
NEAR (1)							
NOTCH	80%	1.5	N/A	N/A			
FAR (2)							
NOTCH	80%	7.8	N/A	N/A			

Calibration Remarks:
(1) ZONE 1 - PRR - 1khz
(2) ZONE 2 - PRR - 250 Hz

Comp Temp.	Configuration -	Wo Loc.	Lo Loc.
75 °F	REACTOR VESSEL STUDS	NA	TOP OF STUD

Scan Dir.	Results NI	NRI	RI	Ind No.	% DAC	Length L1	Lmax	L2	Ref. Measurements Wmax	Smax	Thickness 1"<–	C/L	–>1"	Notes:
0	◉	○	○											

Examination/Limitation Remarks: AXIAL dB equals ZONE 1 for Cal.; CIRC dB equals ZONE 2 for Cal.
*ZONE 1 Amp/Sweep 40% / 10

Total Length of Weld	Crown Width	Total Length of Weld Examined	Extent of Perpendicular Scans (W)	Extent of Parallel Scans (L)
NA	NA	5 (L) NA 2 (L) NA 7 and 8 (W) NA	5- From NA to NA 2- From NA to NA	From (5) NA to (2) NA

Primary Examiner	Level	Initials	Assistant Examiner	Level	Initials	Non-Technical Review	Date
George Morini	II	GM	N/ A	N/A		Danny R. Loftus	10-14-01

SNC NDE Level II/III Review		Date	Percentage of Code Coverage	ANII Review	Date
Danny R. Loftus	III	10-14-01	100	[signature]	10/14/01

Revision 4.0

SHARED

Farley Nuclear Plant
Ultrasonic Calibration and Examination Record

FNP-0-NDE-100.39
Southern Nuclear Operating Company

Unit	Sketch/Component Number	Date	Sheet No.
1	ALA1-1300-S32	10/13/01	S01F1U043 Page 1 of 1

Procedure/Rev./TCN	Couplant/Batch No.	ThermometerSN/Cal Due Date	Linearity Sheet No.
FNP-0-NDE-100.39 / 4.0 / N/A	Ultragel II / 01125	43619 10-12-01 02-25-02	S01F1L001

Instrument

Make/Model	Staveley / SONIC 136	
Serial No.	136-911K	
	Ax dB	Circ dB
Reference	36.8	65.4
Scanning	48.8	77.4
Pulser	50 ns	
Frequency	10	Rep Rate (1)(2)
Mode	LONG	Filter 2
Damping	500 O	Reject OFF

Search Unit

Transducer Mfg.	Harisonic		
Serial No.	4890		
Model No.	A10		
Size / No.	.5	Shape /	Round
Frequency/Mode	10 / Long.		
"A" Dimension	N/A		
Nom Angle	0°	Meas Angle	0
Cable Type /No. Conn.	RG58/0 /		
Cable Length	N/A		

Calibration Block

Cal. Blk. No.	ALA-36	
Thickness	55.75	
Cal. Temp	75	°F
Cal. In	8:30:00 AM	
Cal. Chk.	0944	
Cal. Out	10:12:00 AM	
Ref. Blk. No.	796478	
Reflector/dB	BR / Ref.	
Amp/Sweep	*20 % 6	

Axial Scans Calibration

	Cal. Refl.	Signal Amp.	Sweep Div.	Wmax
NEAR (1)				
NOTCH	80%	1.5	N/A	
FAR (2)				
NOTCH	80%	7.8	N/A	

Circ Scans Calibration

Cal. Refl.	Signal Amp.	Sweep Div.	Wmax
N/A			
N/A			

Calibration Remarks:
(1) ZONE 1 - PRR - 1khz
(2) ZONE 2 - PRR - 250 Hz

10-14-01

Comp Temp.	Configuration -	Wo Loc.	Lo Loc.
75 °F	REACTOR VESSEL STUDS	NA	TOP OF STUD

Scan Dir.	Results NI	NRI	RI	Ind No.	% DAC	Length L1	Lmax	L2	Ref. Measurements Wmax	Smax	Thickness 1"<-	C/L	->1"	Notes:
0	◉	○	○											

Examination/Limitation Remarks: AXIAL dB equals ZONE 1 for Cal.; CIRC dB equals ZONE 2 for Cal.
*ZONE 1 Amp/Sweep 40% / 10

Total Length of Weld	Crown Width	Total Length of Weld Examined	Extent of Perpendicular Scans (W)	Extent of Parallel Scans (L)
NA	NA	5 (L) NA 2 (L) NA 7 and 8 (W) NA	5- From NA to NA 2- From NA to NA	From (5) NA to (2) NA

Primary Examiner	Level	Initials	Assistant Examiner	Level	Initials	Non-Technical Review	Date
George Morini	II		N/ A	N/A			10-14-01

SNC NDE Level II/III Review		Date	Percentage of Code Coverage	ANII Review	Date
	III	10-14-01	100		10/14/01

Revision 4.0

SHARED

Farley Nuclear Plant
Ultrasonic Calibration and Examination Record

FNP-0-NDE-100.39
Southern Nuclear Operating Company

Unit	Sketch/Component Number	Date	Sheet No.	
1	ALA1-1300-S33	10/13/01	S01F1U044	Page 1 of 1

Procedure/Rev./TCN	Couplant/Batch No.	ThermometerSN/Cal Due Date	Linearity Sheet No.
FNP-0-NDE-100.39 / 4.0 / N/A	Ultragel II / 01125	43619 AM 10-14-01 02-25-02	S01F1L001

Instrument

Make/Model	Staveley / SONIC 136	
Serial No.	136-911K	
	Ax dB	Circ dB
Reference	36.8	65.4
Scanning	48.8	77.4
Pulser	50 ns	
Frequency	10	Rep Rate (1)(2)
Mode	LONG	Filter 2
Damping	500 O	Reject OFF

Search Unit

Transducer Mfg.	Harisonic		
Serial No.	4890		
Model No.	A10		
Size / No.	.5	Shape /	Round
Frequency/Mode	10 / Long.		
"A" Dimension	N/A		
Nom Angle	0°	Meas Angle	0
Cable Type /No. Conn.	RG58/0 /		
Cable Length	N/A		

Calibration Block

Cal. Blk. No.	ALA-36		
Thickness			
Cal. Temp	75 °F		
Cal. In	8:30:00 AM		
Cal. Chk.	0948		
Cal. Out	10:12:00 AM		
Ref. Blk. No.	796478		
Reflector/dB	BR /	Ref.	
Amp/Sweep	*20 %	6	

Ref 10-14-01

Axial Scans Calibration

	Cal. Refl.	Signal Amp.	Sweep Div.	Wmax
NEAR (1)				
NOTCH	80%	1.5	N/A	
FAR (2)				
NOTCH	80%	7.8	N/A	

Circ Scans Calibration

Cal. Refl.	Signal Amp.	Sweep Div.	Wmax
N/A			
N/A			

Calibration Remarks:
(1) ZONE 1 - PRR - 1khz
(2) ZONE 2 - PRR - 250 Hz

Comp Temp.	Configuration -	Wo Loc.	Lo Loc.
75 °F	REACTOR VESSEL STUDS	NA	TOP OF STUD

Scan Dir.	Results NI	NRI	RI	Ind No.	% DAC	Length L1	Lmax	L2	Ref. Measurements Wmax	Smax	Thickness 1"<--	C/L	-->1"	Notes:
0	◉	○	○											

Examination/Limitation Remarks: AXIAL dB equals ZONE 1 for Cal.; CIRC dB equals ZONE 2 for Cal.
*ZONE 1 Amp/Sweep 40% / 10

Total Length of Weld	Crown Width	Total Length of Weld Examined	Extent of Perpendicular Scans (W)	Extent of Parallel Scans (L)
NA	NA	5 (L) NA 2 (L) NA 7 and 8 (W) NA	5- From NA to NA 2- From NA to NA	From (5) NA to (2) NA

Primary Examiner	Level	Initials	Assistant Examiner	Level	Initials	Non-Technical Review	Date
George Morini	II		N/ A	N/A			10-14-01

SNC NDE Level II/III Review		Date	Percentage of Code Coverage	ANII Review	Date
	III	10-14-01	100		10/14/01

Revision 4.0

SHARED

Farley Nuclear Plant
Ultrasonic Calibration and Examination Record

FNP-0-NDE-100.39
Southern Nuclear Operating Company

Unit	Sketch/Component Number	Date	Sheet No.
1	ALA1-1300-S34	10/13/01	S01F1U045 Page 1 of 1

Procedure/Rev./TCN	Couplant/Batch No.	ThermometerSN/Cal Due Date	Linearity Sheet No.
FNP-0-NDE-100.39 / 4.0 / N/A	Ultragel II / 01125	43619 10-14-01 02-05-02	S01F1L001

Instrument

Make/Model	Staveley / SONIC 136	
Serial No.	136-911K	
	Ax dB	Circ dB
Reference	36.8	65.4
Scanning	48.8	77.4
Pulser	50 ns	
Frequency	10	Rep Rate (1)(2)
Mode	LONG	Filter 2
Damping	500 O	Reject OFF

Search Unit

Transducer Mfg.	Harisonic		
Serial No.	4890		
Model No.	A10		
Size / No.	.5	Shape /	Round
Frequency/Mode	10 / Long.		
"A" Dimension	N/A		
Nom Angle	0°	Meas Angle	0
Cable Type /No. Conn.	RG58/0 /		
Cable Length	N/A		

Calibration Block

Cal. Blk. No.	ALA-36	
Thickness	55.75	
Cal. Temp	75	°F
Cal. In	8:30:00 AM	
Cal. Chk.	0953	
Cal. Out	10:12:00 AM	
Ref. Blk. No.	796478	
Reflector/dB	BR / Ref.	
Amp/Sweep	*20 % 6	

Axial Scans Calibration

	Cal. Refl.	Signal Amp.	Sweep Div.	Wmax
NEAR (1) NOTCH	80%	1.5	N/A	N/A
FAR (2) NOTCH	80%	7.8	N/A	N/A

Circ Scans Calibration

Cal. Refl.	Signal Amp.	Sweep Div.	Wmax

Calibration Remarks:
(1) ZONE 1 - PRR - 1khz
(2) ZONE 2 - PRR - 250 Hz
10-14-01

Comp Temp.	Configuration -	Wo Loc.	Lo Loc.
75 °F	REACTOR VESSEL STUDS	NA	TOP OF STUD

Scan Dir.	Results NI	NRI	RI	Ind No.	% DAC	Length L1	Lmax	L2	Ref. Measurements Wmax	Smax	Thickness 1"<--	C/L	-->1"	Notes:
0	◉	○	○											

Examination/Limitation Remarks: AXIAL dB equals ZONE 1 for Cal.; CIRC dB equals ZONE 2 for Cal.
*ZONE 1 Amp/Sweep 40% / 10

Total Length of Weld	Crown Width	Total Length of Weld Examined	Extent of Perpendicular Scans (W)	Extent of Parallel Scans (L)
NA	NA	5 (L) NA 2 (L) NA 7 and 8 (W) NA	5- From NA to NA 2- From NA to NA	From (5) NA to (2) NA

Primary Examiner	Level	Initials	Assistant Examiner	Level	Initials	Non-Technical Review	Date
George Morini	II		N/ A	N/A			10-14-01

SNC NDE Level II/III Review		Date	Percentage of Code Coverage	ANII Review	Date
	TII	10-14-01	100		10/14/01

Revision 4.0

SHARED

Farley Nuclear Plant
Ultrasonic Calibration and Examination Record

FNP-0-NDE-100.39
Southern Nuclear Operating Company

Unit	Sketch/Component Number	Date	Sheet No.
1	ALA1-1300-S35	10/13/01	S01F1U046 Page 1 of 1

Procedure/Rev./TCN	Couplant/Batch No.	ThermometerSN/Cal Due Date	Linearity Sheet No.
FNP-0-NDE-100.39 / 4.0 / N/A	Ultragel II / 01125	43619 10-14-01 02-25-02	S01F1L001

Instrument

Make/Model: Staveley / SONIC 136
Serial No.: 136-911K

	Ax dB	Circ dB
Reference	36.8	65.4
Scanning	48.8	77.4

Pulser: 50 ns
Frequency: 10 Rep Rate: (1)(2)
Mode: LONG Filter: 2
Damping: 500 O Reject: OFF

Search Unit

Transducer Mfg.: Harisonic
Serial No.: 4890
Model No.: A10
Size / No.: .5 Shape / Round
Frequency/Mode: 10 / Long.
"A" Dimension: N/A
Nom Angle: 0° Meas Angle: 0
Cable Type /No. Conn.: RG58/0 /
Cable Length: N/A

Calibration Block

Cal. Blk. No.: ALA-36
Thickness: 55.75
Cal. Temp: 75 °F
Cal. In: 8:30:00 AM
Cal. Chk.: 0956
Cal. Out: 10:12:00 AM
Ref. Blk. No.: 796478
Reflector/dB: BR / Ref.
Amp/Sweep: *20 % 6

Axial Scans Calibration

Cal. Refl.	Signal Amp.	Sweep Div.	Wmax
NEAR (1)			
NOTCH	80%	1.5	N/A
FAR (2)			
NOTCH	80%	7.8	N/A

Circ Scans Calibration

Cal. Refl.	Signal Amp.	Sweep Div.	Wmax
N/A			
N/A			

Calibration Remarks:
(1) ZONE 1 - PRR - 1khz
(2) ZONE 2 - PRR - 250 Hz

Comp Temp.	Configuration -	Wo Loc.	Lo Loc.
75 °F	REACTOR VESSEL STUDS	NA	TOP OF STUD

Scan Dir.	Results NI	NRI	RI	Ind No.	% DAC	Length L1	Lmax	L2	Ref. Measurements Wmax	Smax	Thickness 1"<–	C/L	–>1"	Notes:
0	◉	○	○											

Examination/Limitation Remarks: AXIAL dB equals ZONE 1 for Cal.; CIRC dB equals ZONE 2 for Cal.
*ZONE 1 Amp/Sweep 40% / 10

Total Length of Weld	Crown Width	Total Length of Weld Examined	Extent of Perpendicular Scans (W)	Extent of Parallel Scans (L)
NA	NA	5 (L) NA 2 (L) NA 7 and 8 (W) NA	5- From NA to NA 2- From NA to NA	From (5) NA to (2) NA

Primary Examiner	Level	Initials	Assistant Examiner	Level	Initials	Non-Technical Review	Date
George Morini	II		N/ A	N/A			10-14-01

SNC NDE Level II/III Review		Date	Percentage of Code Coverage	ANII Review	Date
	II	10-14-01	100		10/14/01

Revision 4.0

SHARED

Farley Nuclear Plant
Ultrasonic Calibration and Examination Record

FNP-0-NDE-100.39
Southern Nuclear Operating Company

Unit	Sketch/Component Number	Date	Sheet No.	
1	ALA1-1300-S36	10/13/01	S01F1U047	Page 1 of 1

Procedure/Rev./TCN	Couplant/Batch No.	ThermometerSN/Cal Due Date	Linearity Sheet No.
FNP-0-NDE-100.39 / 4.0 / N/A	Ultragel II / 01125	43619 10-14-01 02-25-02	S01F1L001

Instrument

Make/Model	Staveley / SONIC 136	
Serial No.	136-911K	
	Ax dB	Circ dB
Reference	36.8	65.4
Scanning	48.8	77.4
Pulser	50 ns	
Frequency	10	Rep Rate (1)(2)
Mode	LONG	Filter 2
Damping	500 O	Reject OFF

Search Unit

Transducer Mfg.	Harisonic		
Serial No.	4890		
Model No.	A10		
Size / No.	.5	Shape /	Round
Frequency/Mode	10 / Long.		
"A" Dimension	N/A		
Nom Angle	0°	Meas Angle	0
Cable Type /No. Conn.	RG58/0 /		
Cable Length	N/A		

Calibration Block

Cal. Blk. No.	ALA-36	
Thickness	55.75	
Cal. Temp	75	°F
Cal. In	8:30:00 AM	
Cal. Chk.	0959	
Cal. Out	10:12:00 AM	
Ref. Blk. No.	796478	
Reflector/dB	BR	/ Ref
Amp/Sweep	*20	% 6

Axial Scans Calibration

Cal. Refl.	Signal Amp.	Sweep Div.	Wmax
NEAR (1)			
NOTCH	80%	1.5	N/A
FAR (2)			
NOTCH	80%	7.8	N/A

Circ Scans Calibration

Cal. Refl.	Signal Amp.	Sweep Div.	Wmax
N/A			

Calibration Remarks:
(1) ZONE 1 - PRR - 1khz
(2) ZONE 2 - PRR - 250 Hz

DJ 10-14-01

Comp Temp.	Configuration -	Wo Loc.	Lo Loc.
75 °F	REACTOR VESSEL STUDS	NA	TOP OF STUD

Scan Dir.	Results NI	NRI	RI	Ind No.	% DAC	Length L1	Lmax	L2	Ref. Measurements Wmax	Smax	Thickness 1"<--	C/L	-->1"	Notes:
0	◉	○	○											

Examination/Limitation Remarks: AXIAL dB equals ZONE 1 for Cal.; CIRC dB equals ZONE 2 for Cal.
*ZONE 1 Amp/Sweep 40% / 10

Total Length of Weld	Crown Width	Total Length of Weld Examined	Extent of Perpendicular Scans (W)	Extent of Parallel Scans (L)
NA	NA	5 (L) NA 2 (L) NA 7 and 8 (W) NA	5- From NA to NA 2- From NA to NA	From (5) NA to (2) NA

Primary Examiner	Level	Initials	Assistant Examiner	Level	Initials	Non-Technical Review	Date
George Morini	II		N/ A	N/A		Gary A. Lofton	10-14-01

SNC NDE Level II/III Review		Date	Percentage of Code Coverage	ANII Review	Date
Gary A. Lofton	III	10-14-01	100	C G Ward	10/14/01

Revision 4.0

SHARED

Farley Nuclear Plant
Ultrasonic Calibration and Examination Record

FNP-0-NDE-100.39
Southern Nuclear Operating Company

Unit	Sketch/Component Number	Date	Sheet No.
1	ALA1-1300-S37	10/13/01	S01F1U048 Page 1 of 1

Procedure/Rev./TCN	Couplant/Batch No.	ThermometerSN/Cal Due Date	Linearity Sheet No.
FNP-0-NDE-100.39 / 4.0 / N/A	Ultragel II / 01125	43619 Exp 10-4-01 02-25-02	S01F1L001

Instrument		Search Unit		Calibration Block	
Make/Model	Staveley / SONIC 136	Transducer Mfg.	Harisonic	Cal. Blk. No.	ALA-36
Serial No.	136-911K	Serial No.	4890	Thickness	55.75
		Model No.	A10	Cal. Temp	75 °F
	Ax dB / Circ dB	Size / No.	.5	Shape / Round	Cal. In 8:30:00 AM
Reference	36.8 / 65.4	Frequency/Mode	10 / Long.	Cal. Chk.	1004
Scanning	48.8 / 77.4	"A" Dimension	N/A	Cal. Out	10:12:00 AM
Pulser	50 ns	Nom Angle	0°	Meas Angle 0	Ref. Blk. No. 796478
Frequency	10	Rep Rate	(1)(2)	Cable Type /No. Conn.	RG58/0 / Reflector/dB BR / Ref.
Mode	LONG	Filter	2	Cable Length	N/A Amp/Sweep *20 % 6
Damping	500 O	Reject	OFF		

Axial Scans Calibration

Cal. Refl.	Signal Amp.	Sweep Div.	Wmax
NEAR (1)			
NOTCH	80%	1.5	N/A
FAR (2)			
NOTCH	80%	7.8	N/A

Circ Scans Calibration

Cal. Refl.	Signal Amp.	Sweep Div.	Wmax
N/A			
N/A			

Calibration Remarks:
(1) ZONE 1 - PRR - 1khz
(2) ZONE 2 - PRR - 250 Hz
SD 10-14-01

Comp Temp.	Configuration -	Wo Loc.	Lo Loc.
75 °F	REACTOR VESSEL STUDS	NA	TOP OF STUD

Scan Dir.	Results NI	NRI	RI	Ind No.	% DAC	Length L1	Lmax	L2	Ref. Measurements Wmax	Smax	Thickness 1"<–	C/L	–>1"	Notes:
0	◉	○	○											

Examination/Limitation Remarks: AXIAL dB equals ZONE 1 for Cal.; CIRC dB equals ZONE 2 for Cal.
*ZONE 1 Amp/Sweep 40% / 10

Total Length of Weld	Crown Width	Total Length of Weld Examined	Extent of Perpendicular Scans (W)	Extent of Parallel Scans (L)
NA	NA	5 (L) NA 2 (L) NA 7 and 8 (W) NA	5- From NA to NA 2- From NA to NA	From (5) NA to (2) NA

Primary Examiner	Level	Initials	Assistant Examiner	Level	Initials	Non-Technical Review	Date
George Morini	II	GM	N/ A	N/A		Danny A. Lofton	10-14-01

SNC NDE Level II/III Review		Date	Percentage of Code Coverage	ANII Review	Date
Danny A. Lofton	III	10-14-01	100	P G Ward	10/14/01

Revision 4.0

SHARED

Farley Nuclear Plant
Ultrasonic Calibration and Examination Record

FNP-0-NDE-100.39
Southern Nuclear Operating Company

Unit	Sketch/Component Number	Date	Sheet No.
1	ALA1-1300-S38	10/13/01	S01F1U049 Page 1 of 1

Procedure/Rev./TCN	Couplant/Batch No.	ThermometerSN/Cal Due Date	Linearity Sheet No.
FNP-0-NDE-100.39 / 4.0 / N/A	Ultragel II / 01125	43619 Exp. 10/2001 02.25.02	S01F1L001

Instrument

Make/Model: Staveley / SONIC 136
Serial No.: 136-911K

	Ax dB	Circ dB
Reference	36.8	65.4
Scanning	48.8	77.4
Pulser	50 ns	

Frequency 10 Rep Rate (1) (2)
Mode LONG Filter 2
Damping 500 O Reject OFF

Search Unit

Transducer Mfg. Harisonic
Serial No. 4890
Model No. A10
Size / No. .5 Shape / Round
Frequency/Mode 10 / Long.
"A" Dimension N/A
Nom Angle 0° Meas Angle 0
Cable Type /No. Conn. RG58/0 /
Cable Length N/A

Calibration Block

Cal. Blk. No. ALA-36
Thickness 55.75
Cal. Temp 75 °F
Cal. In 8:30:00 AM
Cal. Chk. 1010
Cal. Out 10:12:00 AM
Ref. Blk. No. 796478
Reflector/dB BR / Ref.
Amp/Sweep *20 % 6

Axial Scans Calibration

Cal. Refl.	Signal Amp.	Sweep Div.	Wmax
NEAR (1)			
NOTCH	80%	1.5	N/A
FAR (2)			
NOTCH	80%	7.8	N/A

Circ Scans Calibration

Cal. Refl.	Signal Amp.	Sweep Div.	Wmax
N/A			
N/A			

Calibration Remarks:
(1) ZONE 1 - PRR - 1khz
(2) ZONE 2 - PRR - 250 Hz

Dal 10-14-01

Comp Temp.	Configuration -	Wo Loc.	Lo Loc.
75 °F	REACTOR VESSEL STUDS	NA	TOP OF STUD

Scan Dir.	Results NI	NRI	RI	Ind No.	% DAC	Length L1	Lmax	L2	Ref. Measurements Wmax	Smax	Thickness 1"<–	C/L	–>1"	Notes:
0	◉	○	○											

Examination/Limitation Remarks: AXIAL dB equals ZONE 1 for Cal.; CIRC dB equals ZONE 2 for Cal.
*ZONE 1 Amp/Sweep 40% / 10

Total Length of Weld	Crown Width	Total Length of Weld Examined	Extent of Perpendicular Scans (W)	Extent of Parallel Scans (L)
NA	NA	5 (L) NA 2 (L) NA 7 and 8 (W) NA	5- From NA to NA 2- From NA to NA	From (5) NA to (2) NA

Primary Examiner	Level	Initials	Assistant Examiner	Level	Initials	Non-Technical Review	Date
George Morini	II	[illegible]	N/ A	N/A		Gary A. Loftus	10-14-01

SNC NDE Level II/III Review		Date	Percentage of Code Coverage	ANII Review	Date
Gary A. Loftus	III	10-14-01	100	[illegible]	10/14/01

Revision 4.0

Farley Nuclear Plant
Magnetic Particle Examination Record

SHARED

FNP-0-NDE-100.11
MT-F-FORM 002
Southern Nuclear Operating Company

Unit	Weld Number	Procedure/Rev./TCN	Sheet No.
1	ALA1-1300-S20	FNP-0-NDE-100.11 / 4.0 / N/A	S01F1M004 Page 1 of 1

Thermometer

Mfg./Ser. No. PTC / 43880
Cal. Due Date 02/25/02

Surface Temp. 80 ° F

Magnetizing Yoke

Mfg.: Magnaflux **Power** AC
Serial No.: A999603
Pole Spacing: 8"
Field Indicator S/N: N/A
Field Indicator Acceptable [Y/N] Yes

MT Materials

Mfg.: Magnaflux
Batch Number: 96F02K
Color: Fluorescent
Type: 14 AM

Component Configuration
REACTOR VESSEL STUDS

% of Length Coverage 100%
% of Area Coverage 100%

Date 10/13/01

Ind. No.	Results	Indication Desc. / Exam Limitations / etc.	Remarks
N/A	NI	N/A	Black Light Checks performed at 1050, 1310 and 1525 - SAT; Magnetic field verified with Mag Particle field indicator

Remarks: Other equipment: Spectraline Black Light Meter S/N 165449, Magnaflux L-10 Coil, Spectraline Black Light S/N 376918

Primary Examiner	ASNT Level	Initials	Assistant Examiner	ASNT Level	Initials	Non-Technical Review	Date
Harry Ackerman	II	HA	Clyde W. Kiehl	II	CWK	Lynda Duke	10-17-01

SNC NDE Level II/III Review		Date	Percentage of Code Coverage	ANII Review	Date
[illegible]	III	10-17-01	100	[illegible]	10/17/01

Revision 4.

Farley Nuclear Plant
Magnetic Particle Examination Record

SHARED

FNP-0-NDE-100.11
MT-F-FORM 002
Southern Nuclear Operating Company

Unit	Weld Number	Procedure/Rev./TCN	Sheet No.
1	ALA1-1300-S21	FNP-0-NDE-100.11 / 4.0 / N/A	S01F1M005 Page 1 of 1

Thermometer

Mfg./Ser. No. PTC / 43880
Cal. Due Date 02/25/02

Surface Temp. 80 °F

Magnetizing Yoke

Mfg.: Magnaflux **Power** AC
Serial No.: A999603
Pole Spacing: 8"
Field Indicator S/N: N/A
Field Indicator Acceptable [Y/N] Yes

MT Materials

Mfg.: Magnaflux
Batch Number: 96F02K
Color: Fluorescent
Type: 14 AM

Component Configuration
REACTOR VESSEL STUDS

% of Length Coverage 100%
% of Area Coverage 100%

Date 10/13/01

Ind. No.	Results	Indication Desc. / Exam Limitations / etc.	Remarks
N/A	NI	N/A	Black Light Checks performed at 1050, 1310 and 1525 - SAT; Magnetic Fields verified with Mag Particle Field Indicator

Remarks: Other equipment: Spectraline Black Light Meter S/N 165449, Magnaflux L-10 Coil, Spectraline Black Light S/N 376918

Primary Examiner	ASNT Level	Initials	Assistant Examiner	ASNT Level	Initials	Non-Technical Review	Date
Harry Ackerman	II	HWA	Chris Danson	It	CWK	Lynda Duke	10-17-01

SNC NDE Level II/III Review		Date	Percentage of Code Coverage	ANII Review	Date
Harry A. Lofton	III	10-17-01	100	CG Wood	10/17/01

Revision 4.

Farley Nuclear Plant
Magnetic Particle Examination Record

SHARED

FNP-0-NDE-100.11
MT-F-FORM 002
Southern Nuclear Operating Company

Unit	Weld Number	Procedure/Rev./TCN	Sheet No.
1	ALA1-1300-S22	FNP-0-NDE-100.11 / 4.0 / N/A	S01F1M006 Page 1 of 1

Thermometer

Mfg./Ser. No. PTC / 43880
Cal. Due Date 02/25/02

Surface Temp. 80 ° F

Magnetizing Yoke

Mfg.: Magnaflux **Power** AC
Serial No.: A999603
Pole Spacing: 8"
Field Indicator S/N: N/A
Field Indicator Acceptable [Y/N] Yes

MT Materials

Mfg.: Magnaflux
Batch Number: 96F02K
Color: Fluorescent
Type: 14 AM

Component Configuration
REACTOR VESSEL STUDS

% of Length Coverage 100%
% of Area Coverage 100%

Date 10/13/01

Ind. No.	Results	Indication Desc. / Exam Limitations / etc.	Remarks
N/A	NI	N/A	Black Light Checks performed at 1050, 1310 and 1525 - SAT; Magnetic Fields verified with Mag Particle Field Indicator.

Remarks: Other equipment: Spectraline Black Light Meter S/N 165449, Magnaflux L-10 Coil, Spectraline Black Light S/N 376918

Primary Examiner	ASNT Level	Initials	Assistant Examiner	ASNT Level	Initials	Non-Technical Review	Date
Harry Ackerman	II	HWA	Clyde W. Kiehl	II	CWK	Lynda Duke	10-17-01

SNC NDE Level II/III Review		Date	Percentage of Code Coverage	ANII Review	Date
Gary A. Loftus	III	10-17-01	100	C G Kiehl	10/17/01

Revision 4.

Farley Nuclear Plant
Magnetic Particle Examination Record

SHARED

FNP-0-NDE-100.11
MT-F-FORM 002
Southern Nuclear Operating Company

Unit	Weld Number	Procedure/Rev./TCN	Sheet No.
1	ALA1-1300-S23	FNP-0-NDE-100.11 / 4.0 / N/A	S01F1M007 Page 1 of 1

Thermometer

Mfg./Ser. No. PTC / 43880
Cal. Due Date 02/25/02

Surface Temp. 80 °F

Magnetizing Yoke

Mfg.: Magnaflux **Power** AC
Serial No.: A999603
Pole Spacing: 8"
Field Indicator S/N: N/A
Field Indicator Acceptable [Y/N] Yes

MT Materials

Mfg.: Magnaflux
Batch Number: 96F02K
Color: Fluorescent
Type: 14 AM

Component Configuration
REACTOR VESSEL STUDS

% of Length Coverage 100%
% of Area Coverage 100%
Date 10/13/01

Ind. No.	Results	Indication Desc. / Exam Limitations / etc.	Remarks
N/A	NI	N/A	Black Light Checks performed at 1050, 1310 and 1525 - SAT; Magnetic Fields verified with Mag Particle Field Indicator.

Remarks: Other equipment: Spectraline Black Light Meter S/N 165449, Magnaflux L-10 Coil, Spectraline Black Light S/N 376918

Primary Examiner	ASNT Level	Initials	Assistant Examiner	ASNT Level	Initials	Non-Technical Review	Date
Harry Ackerman	II	HWA	Clyde W. Kiehl	II	CWK	Lynda Duke	10-17-01

SNC NDE Level II/III Review		Date	Percentage of Code Coverage	ANII Review	Date
Barry R. Loftus	III	10-17-01	100	C G Ward	10/17/01

Revision 4.

Farley Nuclear Plant
Magnetic Particle Examination Record

SHARED

FNP-0-NDE-100.11
MT-F-FORM 002
Southern Nuclear Operating Company

Unit	Weld Number	Procedure/Rev./TCN	Sheet No.
1	ALA1-1300-S24	FNP-0-NDE-100.11 / 4.0 / N/A	S01F1M008 Page 1 of 1

Thermometer

Mfg./Ser. No. PTC / 43880
Cal. Due Date 02/25/02

Surface Temp. 80 °F

Magnetizing Yoke

Mfg.: Magnaflux **Power** AC
Serial No.: A999603
Pole Spacing: 8"
Field Indicator S/N: N/A
Field Indicator Acceptable [Y/N] Yes

MT Materials

Mfg.: Magnaflux
Batch Number: 96F02K
Color: Fluorescent
Type: 14 AM

Component Configuration
REACTOR VESSEL STUDS

% of Length Coverage 100%
% of Area Coverage 100%

Date 10/13/01

Ind. No.	Results	Indication Desc. / Exam Limitations / etc.	Remarks
N/A	NI	N/A	Black Light Checks performed at 1050, 1310 and 1525 - SAT; Magnetic Fields verified with Mag Particle Field Indicator.

Remarks: Other equipment: Spectraline Black Light Meter S/N 165449, Magnaflux L-10 Coil, Spectraline Black Light S/N 376918

Primary Examiner	ASNT Level	Initials	Assistant Examiner	ASNT Level	Initials	Non-Technical Review	Date
Harry Ackerman	II	[illegible]	Clyde W. Kiehl	II	[illegible]	Lynda Duke	10-17-01

SNC NDE Level II/III Review		Date	Percentage of Code Coverage	ANII Review	Date
Gary A. Lofton	III	10-17-01	100	[illegible]	10/17/01

Revision 4.

Farley Nuclear Plant
Magnetic Particle Examination Record

SHARED

FNP-0-NDE-100.11
MT-F-FORM 002
Southern Nuclear Operating Company

Unit	Weld Number	Procedure/Rev./TCN	Sheet No.
1	ALA1-1300-S25	FNP-0-NDE-100.11 / 4.0 / N/A	S01F1M009 Page 1 of 1

Thermometer

Mfg./Ser. No. PTC / 43880
Cal. Due Date 02/25/02

Surface Temp. 80 ° F

Magnetizing Yoke

Mfg.: Magnaflux **Power** AC
Serial No.: A999603
Pole Spacing: 8"
Field Indicator S/N: N/A
Field Indicator Acceptable [Y/N] Yes

MT Materials

Mfg.: Magnaflux
Batch Number: 96F02K
Color: Fluorescent
Type: 14 AM

Component Configuration
REACTOR VESSEL STUDS

% of Length Coverage 100%
% of Area Coverage 100%

Date 10/13/01

Ind. No.	Results	Indication Desc. / Exam Limitations / etc.	Remarks
N/A	NI	N/A	Black Light Checks performed at 1050, 1310 and 1525 - SAT; Magnetic Fields verified with Mag Particle Field Indicator.

Remarks: Other equipment: Spectraline Black Light Meter S/N 165449, Magnaflux L-10 Coil, Spectraline Black Light S/N 376918

Primary Examiner	ASNT Level	Initials	Assistant Examiner	ASNT Level	Initials	Non-Technical Review	Date
Harry Ackerman	II	HA	Clyde W. Kiehl	II	CWK	Lynda Auke	10-17-01

SNC NDE Level II/III Review		Date	Percentage of Code Coverage	ANII Review	Date
Daryl A. Sofhus	III	10-17-01	100	CGKiehl	10/17/01

Revision 4.

Farley Nuclear Plant
Magnetic Particle Examination Record

SHARED

FNP-0-NDE-100.11
MT-F-FORM 002
Southern Nuclear Operating Company

Unit	Weld Number	Procedure/Rev./TCN	Sheet No.
1	ALA1-1300-S26	FNP-0-NDE-100.11 / 4.0 / N/A	S01F1M010 Page 1 of 1

Thermometer

Mfg./Ser. No. PTC / 43880
Cal. Due Date 02/25/02

Surface Temp. 80 °F

Magnetizing Yoke

Mfg.: Magnaflux **Power** AC
Serial No.: A999603
Pole Spacing: 8"
Field Indicator S/N: N/A
Field Indicator Acceptable [Y/N] Yes

MT Materials

Mfg.: Magnaflux
Batch Number: 96F02K
Color: Fluorescent
Type: 14 AM

Component Configuration
REACTOR VESSEL STUDS

% of Length Coverage 100%
% of Area Coverage 100%

Date 10/13/01

Ind. No.	Results	Indication Desc. / Exam Limitations / etc.	Remarks
N/A	NI	N/A	Black Light Checks performed at 1050, 1310 and 1525 - SAT; Magnetic Fields verified with Mag Particle Field Indicator.

Remarks: Other equipment: Spectraline Black Light Meter S/N 165449, Magnaflux L-10 Coil, Spectraline Black Light S/N 376918

Primary Examiner	ASNT Level	Initials	Assistant Examiner	ASNT Level	Initials	Non-Technical Review	Date
Harry Ackerman	II	HA	Clyde W. Kiehl	II	CWK	Lynda Duke	10-17-01

SNC NDE Level II/III Review		Date	Percentage of Code Coverage	ANII Review	Date
Darryl A. Loftus	III	10-17-01	100	CGWard	10/17/01

Revision 4.

Farley Nuclear Plant
Magnetic Particle Examination Record

SHARED

FNP-0-NDE-1u0.11
MT-F-FORM 002
Southern Nuclear Operating Company

Unit	Weld Number	Procedure/Rev./TCN	Sheet No.
1	ALA1-1300-S27	FNP-0-NDE-100.11 / 4.0 / N/A	S01F1M011 Page 1 of 1

Thermometer

Mfg./Ser. No. PTC / 43880
Cal. Due Date 02/25/02

Surface Temp. 80 °F

Magnetizing Yoke

Mfg.: Magnaflux **Power** AC
Serial No.: A999603
Pole Spacing: 8"
Field Indicator S/N: N/A
Field Indicator Acceptable [Y/N] Yes

MT Materials

Mfg.: Magnaflux
Batch Number: 96F02K
Color: Fluorescent
Type: 14 AM

Component Configuration
REACTOR VESSEL STUDS

% of Length Coverage 100%
% of Area Coverage 100%

Date 10/13/01

Ind. No.	Results	Indication Desc. / Exam Limitations / etc.	Remarks
N/A	NI	N/A	Black Light Checks performed at 1050, 1310 and 1525 - SAT; Magnetic Fields verified with Mag Particle Field Indicator.

Remarks: Other equipment: Spectraline Black Light Meter S/N 165449, Magnaflux L-10 Coil, Spectraline Black Light S/N 376918

Primary Examiner	ASNT Level	Initials	Assistant Examiner	ASNT Level	Initials	Non-Technical Review	Date
Harry Ackerman	II	HA	Clyde W. Kiehl	II	CWK	Lynda Duke	10-17-01

SNC NDE Level II/III Review		Date	Percentage of Code Coverage	ANII Review	Date
Gary A. Loftus	III	10-17-01	100	[illegible]	10/17/01

Revision 4.

Farley Nuclear Plant
Magnetic Particle Examination Record

SHARED

FNP-0-NDE-100.11
MT-F-FORM 002
Southern Nuclear Operating Company

Unit	Weld Number	Procedure/Rev./TCN	Sheet No.
1	ALA1-1300-S28	FNP-0-NDE-100.11 / 4.0 / N/A	S01F1M012 Page 1 of 1

Thermometer

Mfg./Ser. No. PTC / 43880
Cal. Due Date 02/25/02

Surface Temp. 80 °F

Magnetizing Yoke

Mfg.: Magnaflux
Power AC
Serial No.: A999603
Pole Spacing: 8"
Field Indicator S/N: N/A
Field Indicator Acceptable [Y/N] Yes

MT Materials

Mfg.: Magnaflux
Batch Number: 96F02K
Color: Fluorescent
Type: 14 AM

Component Configuration
REACTOR VESSEL STUDS

% of Length Coverage 100%
% of Area Coverage 100%

Date 10/13/01

Ind. No.	Results	Indication Desc. / Exam Limitations / etc.	Remarks
N/A	NI	N/A	Black Light Checks performed at 1050, 1310 and 1525 - SAT; Magnetic Fields verified with Mag Particle Field Indicator

Remarks: Other equipment: Spectraline Black Light Meter S/N 165449, Magnaflux L-10 Coil, Spectraline Black Light S/N 376918

Primary Examiner	ASNT Level	Initials	Assistant Examiner	ASNT Level	Initials	Non-Technical Review	Date
Harry Ackerman	II	HWA	Clyde W. Kiehl	II	CWK	Lynda Duke	10-17-01

SNC NDE Level II/III Review	Date	Percentage of Code Coverage	ANII Review	Date
Garry A. Loftus III	10-17-01	100	CG Ward	10/17/01

Revision 4.

Farley Nuclear Plant
Magnetic Particle Examination Record

SHARED

FNP-0-NDE-100.11
MT-F-FORM 002
Southern Nuclear Operating Company

Unit	Weld Number	Procedure/Rev./TCN	Sheet No.
1	ALA1-1300-S29	FNP-0-NDE-100.11 / 4.0 / N/A	S01F1M013 Page 1 of 1

Thermometer

Mfg./Ser. No. PTC / 43880
Cal. Due Date 02/25/02

Surface Temp. 80 ° F

Magnetizing Yoke

Mfg.: Magnaflux **Power** AC
Serial No.: A999603
Pole Spacing: 8"
Field Indicator S/N: N/A
Field Indicator Acceptable [Y/N] Yes

MT Materials

Mfg.: Magnaflux
Batch Number: 96F02K
Color: Fluorescent
Type: 14 AM

Component Configuration
REACTOR VESSEL STUDS

% of Length Coverage 100%
% of Area Coverage 100%

Date 10/13/01

Ind. No.	Results	Indication Desc. / Exam Limitations / etc.	Remarks
N/A	NI	N/A	Black Light Checks performed at 1050, 1310 and 1525 - SAT; Magnetic Fields verified with Mag Particle Field Indicator.

Remarks: Other equipment: Spectraline Black Light Meter S/N 165449, Magnaflux L-10 Coil, Spectraline Black Light S/N 376918

Primary Examiner	ASNT Level	Initials	Assistant Examiner	ASNT Level	Initials	Non-Technical Review	Date
Harry Ackerman	II	HA	Clyde W. Kiehl	II	CWK	Lynda Duke	10-17-01

SNC NDE Level II/III Review		Date	Percentage of Code Coverage	ANII Review	Date
Darryl A. Lofton	III	10-17-01	100	[illegible]	10/17/01

Revision 4.

Farley Nuclear Plant
Magnetic Particle Examination Record

SHARED

FNP-0-NDE-100.11
MT-F-FORM 002
Southern Nuclear Operating Company

Unit	Weld Number	Procedure/Rev./TCN	Sheet No.
1	ALA1-1300-S30	FNP-0-NDE-100.11 / 4.0 / N/A	S01F1M014 Page 1 of 1

Thermometer

Mfg./Ser. No. PTC / 43880
Cal. Due Date 02/25/02

Surface Temp. 80 °F

Magnetizing Yoke

Mfg.: Magnaflux
Power AC
Serial No.: A999603
Pole Spacing: 8"
Field Indicator S/N: N/A
Field Indicator Acceptable [Y/N] Yes

MT Materials

Mfg.: Magnaflux
Batch Number: 96F02K
Color: Fluorescent
Type: 14 AM

Component Configuration
REACTOR VESSEL STUDS

% of Length Coverage 100%
% of Area Coverage 100%

Date 10/13/01

Ind. No.	Results	Indication Desc. / Exam Limitations / etc.	Remarks
N/A	NI	N/A	Black Light Checks performed at 1050, 1310 and 1525 - SAT; Magnetic Fields verified with Mag Particle Field Indicator.

Remarks: Other equipment: Spectraline Black Light Meter S/N 165449, Magnaflux L-10 Coil, Spectraline Black Light S/N 376918

Primary Examiner	ASNT Level	Initials	Assistant Examiner	ASNT Level	Initials	Non-Technical Review	Date
Harry Ackerman	II	HA	Clyde W. Kiehl	II	CWK	Lynda Auke	10-17-01

SNC NDE Level II/III Review		Date	Percentage of Code Coverage	ANII Review	Date
Darryl R. Loftus	III	10-17-01	100	CGWard	10/17/01

Revision 4.

Farley Nuclear Plant
Magnetic Particle Examination Record

SHARED

FNP-0-NDE-1u0.11
MT-F-FORM 002
Southern Nuclear Operating Company

Unit	Weld Number	Procedure/Rev./TCN	Sheet No.
1	ALA1-1300-S31	FNP-0-NDE-100.11 / 4.0 / N/A	S01F1M015 Page 1 of 1

Thermometer
Mfg./Ser. No. PTC / 43880
Cal. Due Date 02/25/02

Surface Temp. 80 ° F

Magnetizing Yoke
Mfg.: Magnaflux
Power AC
Serial No.: A999603
Pole Spacing: 8"
Field Indicator S/N: N/A
Field Indicator Acceptable [Y/N] Yes

MT Materials
Mfg.: Magnaflux
Batch Number: 96F02K
Color: Fluorescent
Type: 14 AM

Component Configuration
REACTOR VESSEL STUDS

% of Length Coverage 100%
% of Area Coverage 100%
Date 10/13/01

Ind. No.	Results	Indication Desc. / Exam Limitations / etc.	Remarks
N/A	NI	N/A	Black Light Checks performed at 1050, 1310 and 1525 - SAT; Magnetic Fields verified with Mag Particle Field Indicator.

Remarks: Other equipment: Spectraline Black Light Meter S/N 165449, Magnaflux L-10 Coil, Spectraline Black Light S/N 376918

Primary Examiner	ASNT Level	Initials	Assistant Examiner	ASNT Level	Initials	Non-Technical Review	Date
Harry Ackerman	II	HA	Clyde W. Kiehl	II	CWK	Lynda Duke	10-17-01

SNC NDE Level II/III Review		Date	Percentage of Code Coverage	ANII Review	Date
[signature]	III	10-17-01	100	[signature]	10/17/01

Revision 4.

Farley Nuclear Plant
Magnetic Particle Examination Record

SHARED

FNP-0-NDE-100.11
MT-F-FORM 002
Southern Nuclear Operating Company

Unit	Weld Number	Procedure/Rev./TCN	Sheet No.
1	ALA1-1300-S32	FNP-0-NDE-100.11 / 4.0 / N/A	S01F1M016 Page 1 of 1

Thermometer

Mfg./Ser. No. PTC / 43880
Cal. Due Date 02/25/02

Surface Temp. 80 °F

Magnetizing Yoke

Mfg.: Magnaflux **Power** AC
Serial No.: A999603
Pole Spacing: 8"
Field Indicator S/N: N/A
Field Indicator Acceptable [Y/N] Yes

MT Materials

Mfg.: Magnaflux
Batch Number: 96F02K
Color: Fluorescent
Type: 14 AM

Component Configuration
REACTOR VESSEL STUDS

% of Length Coverage 100%
% of Area Coverage 100%

Date 10/13/01

Ind. No.	Results	Indication Desc. / Exam Limitations / etc.	Remarks
N/A	NI	N/A	Black Light Checks performed at 1050, 1310 and 1525 - SAT; Mangetic Fields verified with Mag Particle Field Indicator.

Remarks: Other equipment: Spectraline Black Light Meter S/N 165449, Magnaflux L-10 Coil, Spectraline Black Light S/N 376918

Primary Examiner	ASNT Level	Initials	Assistant Examiner	ASNT Level	Initials	Non-Technical Review	Date
Harry Ackerman	II	[illegible]	Clyde W. Kiehl	II	CWK	Lynda Duke	10-17-01

SNC NDE Level II/III Review		Date	Percentage of Code Coverage	ANII Review	Date
[illegible]	III	10-17-01	100	[illegible]	10/17/01

Revision 4.

Farley Nuclear Plant
Magnetic Particle Examination Record

SHARED

FNP-0-NDE-100.11
MT-F-FORM 002
Southern Nuclear Operating Company

Unit	Weld Number	Procedure/Rev./TCN	Sheet No.
1	ALA1-1300-S33	FNP-0-NDE-100.11 / 4.0 / N/A	S01F1M017 Page (of)

Thermometer

Mfg./Ser. No. PTC / 43880
Cal. Due Date 02/25/02

Surface Temp. 80 ° F

Magnetizing Yoke

Mfg.: Magnaflux **Power** AC
Serial No.: A999603
Pole Spacing: 8"
Field Indicator S/N: N/A
Field Indicator Acceptable [Y/N] Yes

MT Materials

Mfg.: Magnaflux
Batch Number: 96F02K
Color: Fluorescent
Type: 14 AM

Component Configuration
REACTOR VESSEL STUDS

% of Length Coverage 100%
% of Area Coverage 100%

Date 10/13/01

Ind. No.	Results	Indication Desc. / Exam Limitations / etc.	Remarks
N/A	NI	N/A	Black Light Checks performed at 1050, 1310 and 1525 - SAT; Magnetic Fields verified with Mag Particle Field Indicator.

Remarks: Other equipment: Spectraline Black Light Meter S/N 165449, Magnaflux L-10 Coil, Spectraline Black Light S/N 376918

Primary Examiner	ASNT Level	Initials	Assistant Examiner	ASNT Level	Initials	Non-Technical Review	Date
Harry Ackerman	II	HA	Clyde W. Kiehl	II	CK	Lynda Duke	10-17-01

SNC NDE Level II/III Review		Date	Percentage of Code Coverage	ANII Review	Date
Darryl Lofton	III	10-17-01	100	[illegible]	10/17/01

Revision 4.

Farley Nuclear Plant
Magnetic Particle Examination Record

SHARED

FNP-0-NDE-100.11
MT-F-FORM 002
Southern Nuclear Operating Company

Unit	Weld Number	Procedure/Rev./TCN	Sheet No.
1	ALA1-1300-S34	FNP-0-NDE-100.11 / 4.0 / N/A	S01F1M018 Page 1 of 1

Thermometer

Mfg./Ser. No. PTC / 43880
Cal. Due Date 02/25/02

Surface Temp. 80 ° F

Magnetizing Yoke

Mfg.: Magnaflux **Power** AC
Serial No.: A999603
Pole Spacing: 8"
Field Indicator S/N: N/A
Field Indicator Acceptable [Y/N] Yes

MT Materials

Mfg.: Magnaflux
Batch Number: 96F02K
Color: Fluorescent
Type: 14 AM

Component Configuration
REACTOR VESSEL STUDS

% of Length Coverage 100%
% of Area Coverage 100%

Date 10/13/01

Ind. No.	Results	Indication Desc. / Exam Limitations / etc.	Remarks
N/A	NI	N/A	Black Light Checks performed at 1050, 1310 and 1525 - SAT: Magnetic Fields verified with Mag Particle Field Indicator.

Remarks: Other equipment: Spectraline Black Light Meter S/N 165449, Magnaflux L-10 Coil, Spectraline Black Light S/N 376918

Primary Examiner	ASNT Level	Initials	Assistant Examiner	ASNT Level	Initials	Non-Technical Review	Date
Harry Ackerman	II	HA	Clyde W. Kiehl	II	CWK	Lynda Duke	10-17-01

SNC NDE Level II/III Review		Date	Percentage of Code Coverage	ANII Review	Date
Larry A. Lofton	III	10-17-01	100	CGWard	10/17/01

Revision 4.

Farley Nuclear Plant
Magnetic Particle Examination Record

SHARED

FNP-0-NDE-100.11
MT-F-FORM 002
Southern Nuclear Operating Company

Unit	Weld Number	Procedure/Rev./TCN	Sheet No.
1	ALA1-1300-S35	FNP-0-NDE-100.11 / 4.0 / N/A	S01F1M019 Page 1 of 1

Thermometer
Mfg./Ser. No. PTC / 43880
Cal. Due Date 02/25/02
Surface Temp. 80 °F

Magnetizing Yoke
Mfg.: Magnaflux
Power AC
Serial No.: A999603
Pole Spacing: 8"
Field Indicator S/N: N/A
Field Indicator Acceptable [Y/N] Yes

MT Materials
Mfg.: Magnaflux
Batch Number: 96F02K
Color: Fluorescent
Type: 14 AM

Component Configuration
REACTOR VESSEL STUDS

% of Length Coverage 100%
% of Area Coverage 100%
Date 10/13/01

Ind. No.	Results	Indication Desc. / Exam Limitations / etc.	Remarks
N/A	NI	N/A	Black Light Checks performed at 1050, 1310 and 1525 - SAT: Mangetic Fields verified with Mag Particle Field Indicator.

Remarks: Other equipment: Spectraline Black Light Meter S/N 165449, Magnaflux L-10 Coil, Spectraline Black Light S/N 376918

Primary Examiner	ASNT Level	Initials	Assistant Examiner	ASNT Level	Initials	Non-Technical Review	Date
Harry Ackerman	II	HA	Clyde W. Kiehl	II	CWK	Lynda Duke	10-17-01

SNC NDE Level II/III Review		Date	Percentage of Code Coverage	ANII Review	Date
Darryl Loftus	III	10-17-01	100	[illegible]	10/17/01

Revision 4.

Farley Nuclear Plant
Magnetic Particle Examination Record

SHARED

FNP-0-NDE-100.11
MT-F-FORM 002
Southern Nuclear Operating Company

Unit	Weld Number	Procedure/Rev./TCN	Sheet No.
1	ALA1-1300-S36	FNP-0-NDE-100.11 / 4.0 / N/A	S01F1M020 Page 1 of 1

Thermometer

Mfg./Ser. No. PTC / 43880
Cal. Due Date 02/25/02

Surface Temp. 80 °F

Magnetizing Yoke

Mfg.: Magnaflux **Power** AC
Serial No.: A999603
Pole Spacing: 8"
Field Indicator S/N: N/A
Field Indicator Acceptable [Y/N] Yes

MT Materials

Mfg.: Magnaflux
Batch Number: 96F02K
Color: Fluorescent
Type: 14 AM

Component Configuration
REACTOR VESSEL STUDS

% of Length Coverage 100%
% of Area Coverage 100%
Date 10/13/01

Ind. No.	Results	Indication Desc. / Exam Limitations / etc.	Remarks
N/A	NI	N/A	Black Light Checks performed at 1050, 1310 and 1525 - SAT: Magnetic Fields verified with Mag Particle Field Indicator

Remarks: Other equipment: Spectraline Black Light Meter S/N 165449, Magnaflux L-10 Coil, Spectraline Black Light S/N 376918

Primary Examiner	ASNT Level	Initials	Assistant Examiner	ASNT Level	Initials	Non-Technical Review	Date
Harry Ackerman	II	[illegible]	Clyde W. Kiehl	II	[illegible]	Lynda Duke	10-17-01

SNC NDE Level II/III Review		Date	Percentage of Code Coverage	ANII Review	Date
[illegible]	III	10-17-01	100	[illegible]	10/17/01

Revision 4.

Farley Nuclear Plant
Magnetic Particle Examination Record

SHARED

FNP-0-NDE-100.11
MT-F-FORM 002
Southern Nuclear Operating Company

Unit	Weld Number	Procedure/Rev./TCN	Sheet No.
1	ALA1-1300-S37	FNP-0-NDE-100.11 / 4.0 / N/A	S01F1M021 Page 1 of 1

Thermometer

Mfg./Ser. No. PTC / 43880
Cal. Due Date 02/25/02

Surface Temp. 80 °F

Magnetizing Yoke

Mfg.: Magnaflux **Power** AC
Serial No.: A999603
Pole Spacing: 8"
Field Indicator S/N: N/A
Field Indicator Acceptable [Y/N] Yes

MT Materials

Mfg.: Magnaflux
Batch Number: 96F02K
Color: Fluorescent
Type: 14 AM

Component Configuration
REACTOR VESSEL STUDS

% of Length Coverage 100%
% of Area Coverage 100%

Date 10/13/01

Ind. No.	Results	Indication Desc. / Exam Limitations / etc.	Remarks
N/A	NI	N/A	Black Light Checks performed at 1050, 1310 and 1525 - SAT; Magnetic Fields verified with Mag Particle Field Indicator.

Remarks: Other equipment: Spectraline Black Light Meter S/N 165449, Magnaflux L-10 Coil, Spectraline Black Light S/N 376918

Primary Examiner	ASNT Level	Initials	Assistant Examiner	ASNT Level	Initials	Non-Technical Review	Date
Harry Ackerman	II	[illegible]	Clyde W. Kiehl	II	[illegible]	Lynda Duke	10-17-01

SNC NDE Level II/III Review		Date	Percentage of Code Coverage	ANII Review	Date
Gary A. Lofters	III	10-17-01	100	[illegible]	10/17/01

Revision 4.

Farley Nuclear Plant
Magnetic Particle Examination Record

SHARED

FNP-0-NDE-100.11
MT-F-FORM 002
Southern Nuclear Operating Company

Unit	Weld Number	Procedure/Rev./TCN	Sheet No.
1	ALA1-1300-S38	FNP-0-NDE-100.11 / 4.0 / N/A	S01F1M022 Page 1 of 1

Thermometer

Mfg./Ser. No. PTC / 43880
Cal. Due Date 02/25/02

Surface Temp. 80 °F

Magnetizing Yoke

Mfg.: Magnaflux **Power** AC
Serial No.: A999603
Pole Spacing: 8"
Field Indicator S/N: N/A
Field Indicator Acceptable [Y/N] Yes

MT Materials

Mfg.: Magnaflux
Batch Number: 96F02K
Color: Fluorescent
Type: 14 AM

Component Configuration
REACTOR VESSEL STUDS

% of Length Coverage 100%
% of Area Coverage 100%

Date 10/13/01

Ind. No.	Results	Indication Desc. / Exam Limitations / etc.	Remarks
N/A	NI	N/A	Black Light Checks performed at 1050, 1310 and 1525 - SAT; Magnetic Fields verified with Mag Particle Field Indicator.

Remarks: Other equipment: Spectraline Black Light Meter S/N 165449, Magnaflux L-10 Coil, Spectraline Black Light S/N 376918

Primary Examiner	ASNT Level	Initials	Assistant Examiner	ASNT Level	Initials	Non-Technical Review	Date
Harry Ackerman	II	HVA	Clyde W. Kiehl	II	CWK	Lynda Duke	10-17-01

SNC NDE Level II/III Review		Date	Percentage of Code Coverage	ANII Review	Date
Gary L. Lofton	III	10-17-01	100	LGWard	10/17/01

Revision 4.

Farley Nuc. :
Visual Examination Record VT-1

SHARED

FNP-0-ND.- .1
Southern Nuclear Operating Company

Plant / Unit	Line Number/Examination Area/Weld No.	Drawing Number	Sheet Number
Farley / 1	ALA1-1300-N20 REACTOR VESSEL NUTS	ALA1-1300	S01F1V084

Photos	Sketch	Resolution	Technique	
☐ Yes ☐ B/W ☑ No ☐ Color	☐ Yes ☑ No	☐ 1/32" Division (Scale) ☑ 1/32" Line (Gray Card)	☑ Direct ☐ Video ☐ Remote	WO / WA N/A Procedure No. FNP-0-NDE-100.21 Revision No. 1.0 / N/A

Equipment	Lighting	Tools			Examiner/Initial Sig.	Level
☐ Mirror ☑ N/A ☐ Magnifier ☐ CCTV	☐ Ambient ☑ Flashlight ☐ Droplight	☐ Scale ☐ Micrometer ☐ Caliper	☐ Depth Gauge ☐ Comparator ☐ Weld Gauge	☐ Level ☑ N/A ☐	Harry M. Ackerman	II
					Examiner/Initial Sig. Clyde W. Kiehl	II
					Date (Month-Day-Year) 10/13/01	

☐ WELDS AND BASE MATERIAL VT-1	SAT	*UN-SAT	N/A
Ground Blend Material	☐	☐	☑
Undercut	☐	☐	☑
Corrosion Build-up	☐	☐	☑
Gouges	☐	☐	☑
Evidence of Leakage	☐	☐	☑
Arc Strikes	☐	☐	☑
Cracks	☐	☐	☑
Other**	☐	☐	☑

* Provide details on unsat areas by use of supplemental data sheet.
** Provide details on other areas examined

☑ BOLTS, STUDS, AND WASHERS VT-1	SAT	*UN-SAT	N/A
Loose Members	☐	☐	☑
Cracks	☑	☐	☐
Corrosion	☑	☐	☐
Gouges	☑	☐	☐
Thread Damage	☑	☐	☐
Deformation	☑	☐	☐
Protective Coating	☐	☐	☑
Evidence of Leakage	☐	☐	☑
Other **	☐	☐	☑

Comments NONE

	ANII Review	Date
	[illegible]	10/16/01
Reviewed By Gary A. Lofton	Level III	Date 10-16-01

Revision 1.0

Farley Nuc[illegible]
Visual Examination Record VT-1

SHARED

FNP-0-ND[illegible]-[illegible]21
Southern Nuclear Operating Company

Plant / Unit	Line Number/Examination Area/Weld No.	Drawing Number	Sheet Number
Farley / 1	ALA1-1300-N21 REACTOR VESSEL NUTS	ALA1-1300	S01F1V085

Photos	Sketch	Resolution	Technique	
☐ Yes ☐ B/W ☑ No ☐ Color	☐ Yes ☑ No	☐ 1/32" Division (Scale) ☑ 1/32" Line (Gray Card)	☑ Direct ☐ Video ☐ Remote	WO / WA N/A Procedure No. FNP-0-NDE-100.21 Revision No. 1.0 / N/A

Equipment	Lighting	Tools			Examiner/Initial Sig.	Level
☐ Mirror ☑ N/A ☐ Magnifier ☐ CCTV	☐ Ambient ☑ Flashlight ☐ Droplight	☐ Scale ☐ Micrometer ☐ Caliper	☐ Depth Gauge ☐ Comparator ☐ Weld Gauge	☐ Level ☑ N/A ☐	Harry Ackerman Harry M. Ackerman	II
					Examiner/Initial Sig. Clyde W. Kiehl Clyde W Kiehl	II
					Date (Month-Day-Year) 10/13/01	

☐ WELDS AND BASE MATERIAL VT-1	SAT	*UN-SAT	N/A
Ground Blend Material	☐	☐	☑
Undercut	☐	☐	☑
Corrosion Build-up	☐	☐	☑
Gouges	☐	☐	☑
Evidence of Leakage	☐	☐	☑
Arc Strikes	☐	☐	☑
Cracks	☐	☐	☑
Other**	☐	☐	☑

* Provide details on unsat areas by use of supplemental data sheet.
** Provide details on other areas examined

☑ BOLTS, STUDS, AND WASHERS VT-1	SAT	*UN-SAT	N/A
Loose Members	☐	☐	☑
Cracks	☑	☐	☐
Corrosion	☑	☐	☐
Gouges	☑	☐	☐
Thread Damage	☑	☐	☐
Deformation	☑	☐	☐
Protective Coating	☐	☐	☑
Evidence of Leakage	☐	☐	☑
Other **	☐	☐	☑

Comments NONE

	ANII Review	Date
	CGWard	10/16/01
Reviewed By Danny R. Lofters	Level III	Date 10-16-01

Revision 1.0

Farley Nuc... 1
Visual Examination Record VT-1

SHARED

FNP-0-ND... 21
Southern Nuclear Operating Company

Plant / Unit	Line Number/Examination Area/Weld No.	Drawing Number	Sheet Number
Farley / 1	ALA1-1300-N22 REACTOR VESSEL NUTS	ALA1-1300	S01F1V086

Photos	Sketch	Resolution	Technique	
☐ Yes ☐ B/W ☑ No ☐ Color	☐ Yes ☑ No	☐ 1/32" Division (Scale) ☑ 1/32" Line (Gray Card)	☑ Direct ☐ Video ☐ Remote	WO / WA N/A Procedure No. FNP-0-NDE-100.21 Revision No. 1.0 / N/A

Equipment	Lighting	Tools			Examiner/Initial Sig.	Level
☐ Mirror ☑ N/A ☐ Magnifier ☐ CCTV	☐ Ambient ☑ Flashlight ☐ Droplight	☐ Scale ☐ Micrometer ☐ Caliper	☐ Depth Gauge ☐ Comparator ☐ Weld Gauge	☐ Level ☑ N/A ☐	Harry Ackerman Harry M. Ackerman	II
					Examiner/Initial Sig. Clyde W. Kiehl Clyde W Kiehl	II
					Date (Month-Day-Year) 10/13/01	

☐ WELDS AND BASE MATERIAL VT-1	SAT	*UN-SAT	N/A
Ground Blend Material	☐	☐	☑
Undercut	☐	☐	☑
Corrosion Build-up	☐	☐	☑
Gouges	☐	☐	☑
Evidence of Leakage	☐	☐	☑
Arc Strikes	☐	☐	☑
Cracks	☐	☐	☑
Other**	☐	☐	☑

* Provide details on unsat areas by use of supplemental data sheet.
** Provide details on other areas examined

☑ BOLTS, STUDS, AND WASHERS VT-1	SAT	*UN-SAT	N/A
Loose Members	☐	☐	☑
Cracks	☑	☐	☐
Corrosion	☑	☐	☐
Gouges	☑	☐	☐
Thread Damage	☑	☐	☐
Deformation	☑	☐	☐
Protective Coating	☐	☐	☑
Evidence of Leakage	☐	☐	☑
Other **	☐	☐	☑

Comments NONE

	ANII Review	Date
	P G Wand	10/16/01
Reviewed By Larry L. Lofters	Level III	Date 10-16-01

Revision 1.0

Farley Nuc[illegible] t
Visual Examination Record VT-1

SHARED

FNP-0-NDE- [illegible]1
Southern Nuclear Operating Company

Plant / Unit	Line Number/Examination Area/Weld No.	Drawing Number	Sheet Number
Farley / 1	ALA1-1300-N23 REACTOR VESSEL NUTS	ALA1-1300	S01F1V087

Photos	Sketch	Resolution	Technique	
☐ Yes ☐ B/W ☑ No ☐ Color	☐ Yes ☑ No	☐ 1/32" Division (Scale) ☑ 1/32" Line (Gray Card)	☑ Direct ☐ Video ☐ Remote	WO / WA N/A Procedure No. FNP-0-NDE-100.21 Revision No. 1.0 / N/A

Equipment	Lighting	Tools			Examiner/Initial Sig.	Level
☐ Mirror ☑ N/A ☐ Magnifier ☐ CCTV	☐ Ambient ☑ Flashlight ☐ Droplight	☐ Scale ☐ Micrometer ☐ Caliper	☐ Depth Gauge ☐ Comparator ☐ Weld Gauge	☐ Level ☑ N/A ☐	Harry M Ackerman	II
					Examiner/Initial Sig. Clyde W. Kiehl	II
					Date (Month-Day-Year) 10/13/01	

☐ WELDS AND BASE MATERIAL VT-1	SAT	*UN-SAT	N/A
Ground Blend Material	☐	☐	☑
Undercut	☐	☐	☑
Corrosion Build-up	☐	☐	☑
Gouges	☐	☐	☑
Evidence of Leakage	☐	☐	☑
Arc Strikes	☐	☐	☑
Cracks	☐	☐	☑
Other**	☐	☐	☑

* Provide details on unsat areas by use of supplemental data sheet.
** Provide details on other areas examined

☑ BOLTS, STUDS, AND WASHERS VT-1	SAT	*UN-SAT	N/A
Loose Members	☐	☐	☑
Cracks	☑	☐	☐
Corrosion	☑	☐	☐
Gouges	☑	☐	☐
Thread Damage	☑	☐	☐
Deformation	☑	☐	☐
Protective Coating	☐	☐	☑
Evidence of Leakage	☐	☐	☑
Other **	☐	☐	☑

Comments NONE

	ANII Review	Date 10/16/01
Reviewed By Harry A. Loftus	Level III	Date 10-16-01

Revision 1.0

Farley Nuc
Visual Examination Record VT-1

SHARED

FNP-0-NDE-. .1
Southern Nuclear Operating Company

Plant / Unit	Line Number/Examination Area/Weld No.	Drawing Number	Sheet Number
Farley / 1	ALA1-1300-N24 REACTOR VESSEL NUTS	ALA1-1300	S01F1V088

Photos	Sketch	Resolution	Technique	
☐ Yes ☐ B/W ☑ No ☐ Color	☐ Yes ☑ No	☐ 1/32" Division (Scale) ☑ 1/32" Line (Gray Card)	☑ Direct ☐ Video ☐ Remote	WO / WA N/A Procedure No. FNP-0-NDE-100.21 Revision No. 1.0 / N/A

Equipment	Lighting	Tools		
☐ Mirror ☑ N/A ☐ Magnifier ☐ CCTV	☐ Ambient ☑ Flashlight ☐ Droplight	☐ Scale ☐ Depth Gauge ☐ Level ☐ Micrometer ☐ Comparator ☑ N/A ☐ Caliper ☐ Weld Gauge ☐		

Examiner/Initial Sig.	Level
Examiner/Initial Harry Ackerman Sig. Harry M. Ackerman	II
Examiner/Initial Clyde W. Kiehl Sig. Clyde W Kiehl	II
Date (Month-Day-Year) 10/13/01	

☐ WELDS AND BASE MATERIAL VT-1	SAT	*UN-SAT	N/A
Ground Blend Material	☐	☐	☑
Undercut	☐	☐	☑
Corrosion Build-up	☐	☐	☑
Gouges	☐	☐	☑
Evidence of Leakage	☐	☐	☑
Arc Strikes	☐	☐	☑
Cracks	☐	☐	☑
Other**	☐	☐	☑

* Provide details on unsat areas by use of supplemental data sheet.
** Provide details on other areas examined

☑ BOLTS, STUDS, AND WASHERS VT-1	SAT	*UN-SAT	N/A
Loose Members	☐	☐	☑
Cracks	☑	☐	☐
Corrosion	☑	☐	☐
Gouges	☑	☐	☐
Thread Damage	☑	☐	☐
Deformation	☑	☐	☐
Protective Coating	☐	☐	☑
Evidence of Leakage	☐	☐	☑
Other **	☐	☐	☑

Comments NONE

	ANII Review C G Ward	Date 10/16/01
Reviewed By Larry D. Lofthus	Level III	Date 10-16-01

Revision 1.0

SHARED

Plant / Unit	Line Number/Examination Area/Weld No.	Drawing Number	Sheet Number
Farley / 1	ALA1-1300-N25 REACTOR VESSEL NUTS	ALA1-1300	S01F1V089

Photos	Sketch	Resolution	Technique	
☐ Yes ☐ B/W ☑ No ☐ Color	☐ Yes ☑ No	☐ 1/32" Division (Scale) ☑ 1/32" Line (Gray Card)	☑ Direct ☐ Video ☐ Remote	WO / WA N/A Procedure No. FNP-0-NDE-100.21 Revision No. 1.0 / N/A

Equipment	Lighting	Tools		
☐ Mirror ☑ N/A ☐ Magnifier ☐ CCTV	☐ Ambient ☑ Flashlight ☐ Droplight	☐ Scale ☐ Depth Gauge ☐ Level ☐ Micrometer ☐ Comparator ☑ N/A ☐ Caliper ☐ Weld Gauge ☐		

Examiner/Initial Sig.	Level
Harry Ackerman Harry M. Ackerman	II
Clyde W. Kiehl Clyde W Kiehl	II

Date (Month/Day-Year) 10/13/01

☐ WELDS AND BASE MATERIAL VT-1	SAT	*UN-SAT	N/A
Ground Blend Material	☐	☐	☑
Undercut	☐	☐	☑
Corrosion Build-up	☐	☐	☑
Gouges	☐	☐	☑
Evidence of Leakage	☐	☐	☑
Arc Strikes	☐	☐	☑
Cracks	☐	☐	☑
Other**	☐	☐	☑

* Provide details on unsat areas by use of supplemental data sheet.
** Provide details on other areas examined

☑ BOLTS, STUDS, AND WASHERS VT-1	SAT	*UN-SAT	N/A
Loose Members	☐	☐	☑
Cracks	☑	☐	☐
Corrosion	☑	☐	☐
Gouges	☑	☐	☐
Thread Damage	☑	☐	☐
Deformation	☑	☐	☐
Protective Coating	☐	☐	☑
Evidence of Leakage	☐	☐	☑
Other **	☐	☐	☑

Comments NONE

	ANII Review	Date
	CGWarnell	10/16/01
Reviewed By Larry A. Lightner	**Level** III	**Date** 10-16-01

Revision 1.0

SHARED

Plant / Unit	Line Number/Examination Area/Weld No.	Drawing Number	Sheet Number
Farley / 1	ALA1-1300-N26 REACTOR VESSEL NUTS	ALA1-1300	S01F1V090

Photos	Sketch	Resolution	Technique	
☐ Yes ☐ B/W ☑ No ☐ Color	☐ Yes ☑ No	☐ 1/32" Division (Scale) ☑ 1/32" Line (Gray Card)	☑ Direct ☐ Video ☐ Remote	WO / WA N/A Procedure No. FNP-0-NDE-100.21 Revision No. 1.0 / N/A

Equipment	Lighting	Tools			Examiner/Initial Sig.	Level
☐ Mirror ☑ N/A ☐ Magnifier ☐ CCTV	☐ Ambient ☑ Flashlight ☐ Droplight	☐ Scale ☐ Micrometer ☐ Caliper	☐ Depth Gauge ☐ Comparator ☐ Weld Gauge	☐ Level ☑ N/A ☐	Harry Ackerman Sig. Harry M. Ackerman	II
					Examiner/Initial Sig. Clyde W. Kiehl Clyde W Kiehl	II
					Date (Month-Day-Year) 10/13/01	

☐ WELDS AND BASE MATERIAL VT-1	SAT	*UN-SAT	N/A
Ground Blend Material	☐	☐	☑
Undercut	☐	☐	☑
Corrosion Build-up	☐	☐	☑
Gouges	☐	☐	☑
Evidence of Leakage	☐	☐	☑
Arc Strikes	☐	☐	☑
Cracks	☐	☐	☑
Other**	☐	☐	☑

* Provide details on unsat areas by use of supplemental data sheet.
** Provide details on other areas examined

☑ BOLTS, STUDS, AND WASHERS VT-1	SAT	*UN-SAT	N/A
Loose Members	☐	☐	☑
Cracks	☑	☐	☐
Corrosion	☑	☐	☐
Gouges	☑	☐	☐
Thread Damage	☑	☐	☐
Deformation	☑	☐	☐
Protective Coating	☐	☐	☑
Evidence of Leakage	☐	☐	☑
Other **	☐	☐	☑

Comments NONE

	ANII Review C G Wood	Date 10/16/01
Reviewed By Larry A. Lotters	Level III	Date 10-16-01

Farley Nuc... t
Visual Examination Record VT-1

SHARED

FNP-0-NDE-. .21
Southern Nuclear Operating Company

Plant / Unit	Line Number/Examination Area/Weld No.	Drawing Number	Sheet Number
Farley / 1	ALA1-1300-N27 REACTOR VESSEL NUTS	ALA1-1300	S01F1V091

Photos	Sketch	Resolution	Technique	
☐ Yes ☐ B/W ☑ No ☐ Color	☐ Yes ☑ No	☐ 1/32" Division (Scale) ☑ 1/32" Line (Gray Card)	☑ Direct ☐ Video ☐ Remote	WO / WA N/A Procedure No. FNP-0-NDE-100.21 Revision No. 1.0 / N/A

Equipment	Lighting	Tools			Examiner/Initial Sig.	Level
☐ Mirror ☑ N/A ☐ Magnifier ☐ CCTV	☐ Ambient ☑ Flashlight ☐ Droplight	☐ Scale ☐ Micrometer ☐ Caliper	☐ Depth Gauge ☐ Comparator ☐ Weld Gauge	☐ Level ☑ N/A ☐	Harry Ackerman Harry M. Ackerman	II
					Examiner/Initial Sig. Clyde W. Kiehl Clyde W Kiehl	II
					Date (Month-Day-Year) 10/13/01	

☐ WELDS AND BASE MATERIAL VT-1	SAT	*UN-SAT	N/A
Ground Blend Material	☐	☐	☑
Undercut	☐	☐	☑
Corrosion Build-up	☐	☐	☑
Gouges	☐	☐	☑
Evidence of Leakage	☐	☐	☑
Arc Strikes	☐	☐	☑
Cracks	☐	☐	☑
Other**	☐	☐	☑

* Provide details on unsat areas by use of supplemental data sheet.
** Provide details on other areas examined

☑ BOLTS, STUDS, AND WASHERS VT-1	SAT	*UN-SAT	N/A
Loose Members	☐	☐	☑
Cracks	☑	☐	☐
Corrosion	☑	☐	☐
Gouges	☑	☐	☐
Thread Damage	☑	☐	☐
Deformation	☑	☐	☐
Protective Coating	☐	☐	☑
Evidence of Leakage	☐	☐	☑
Other **	☐	☐	☑

Comments NONE

	ANII Review [illegible]	Date 10/16/01
Reviewed By Harry L. Loftus	Level III	Date 10-16-01

Revision 1.0

Farley Nuc[illegible] t
Visual Examination Record VT-1

SHARED

FNP-0-NDE- 21
Southern Nuclear Operating Company

Plant / Unit	Line Number/Examination Area/Weld No.	Drawing Number	Sheet Number
Farley / 1	ALA1-1300-N28 REACTOR VESSEL NUTS	ALA1-1300	S01F1V092

Photos	Sketch	Resolution	Technique	
☐ Yes ☐ B/W ☑ No ☐ Color	☐ Yes ☑ No	☐ 1/32" Division (Scale) ☑ 1/32" Line (Gray Card)	☑ Direct ☐ Video ☐ Remote	WO / WA N/A Procedure No. FNP-0-NDE-100.21 Revision No. 1.0 / N/A

Equipment	Lighting	Tools			Examiner/Initial Sig.	Level
☐ Mirror ☑ N/A ☐ Magnifier ☐ CCTV	☐ Ambient ☑ Flashlight ☐ Droplight	☐ Scale ☐ Micrometer ☐ Caliper	☐ Depth Gauge ☐ Comparator ☐ Weld Gauge	☐ Level ☑ N/A ☐	Harry Ackerman Harry M. Ackerman	II
					Examiner/Initial Sig. Clyde W. Kiehl Clyde W Kiehl	II
					Date (Month-Day-Year) 10/13/01	

☐ WELDS AND BASE MATERIAL VT-1	SAT	*UN-SAT	N/A
Ground Blend Material	☐	☐	☑
Undercut	☐	☐	☑
Corrosion Build-up	☐	☐	☑
Gouges	☐	☐	☑
Evidence of Leakage	☐	☐	☑
Arc Strikes	☐	☐	☑
Cracks	☐	☐	☑
Other**	☐	☐	☑

* Provide details on unsat areas by use of supplemental data sheet.
** Provide details on other areas examined

☑ BOLTS, STUDS, AND WASHERS VT-1	SAT	*UN-SAT	N/A
Loose Members	☐	☐	☑
Cracks	☑	☐	☐
Corrosion	☑	☐	☐
Gouges	☑	☐	☐
Thread Damage	☑	☐	☐
Deformation	☑	☐	☐
Protective Coating	☐	☐	☑
Evidence of Leakage	☐	☐	☑
Other **	☐	☐	☑

Comments NONE

	ANII Review C G Wand	Date 10/16/01
Reviewed By Gary A. Lofton	Level III	Date 10-16-01

Revision 1.0

Farley Nu[illegible]nt
Visual Examination Record VT-1

SHARED

FNP-0-ND[illegible] .21
Southern Nuclear Operating Company

Plant / Unit	Line Number/Examination Area/Weld No.	Drawing Number	Sheet Number
Farley / 1	ALA1-1300-N29 REACTOR VESSEL NUTS	ALA1-1300	S01F1V093

Photos	Sketch	Resolution	Technique	
☐ Yes ☐ B/W ☑ No ☐ Color	☐ Yes ☑ No	☐ 1/32" Division (Scale) ☑ 1/32" Line (Gray Card)	☑ Direct ☐ Video ☐ Remote	WO / WA N/A Procedure No. FNP-0-NDE-100.21 Revision No. 1.0 / N/A

Equipment	Lighting	Tools			Examiner/Initial Sig.	Level
☐ Mirror ☑ N/A ☐ Magnifier ☐ CCTV	☐ Ambient ☑ Flashlight ☐ Droplight	☐ Scale ☐ Micrometer ☐ Caliper	☐ Depth Gauge ☐ Comparator ☐ Weld Gauge	☐ Level ☑ N/A ☐	Harry W. Ackerman Harry W. Ackerman	II
					Examiner/Initial Sig. Clyde W. Kiehl Clyde W Kiehl	II
					Date (Month-Day-Year) 10/13/01	

☐ WELDS AND BASE MATERIAL VT-1	SAT	*UN-SAT	N/A
Ground Blend Material	☐	☐	☑
Undercut	☐	☐	☑
Corrosion Build-up	☐	☐	☑
Gouges	☐	☐	☑
Evidence of Leakage	☐	☐	☑
Arc Strikes	☐	☐	☑
Cracks	☐	☐	☑
Other**	☐	☐	☑

* Provide details on unsat areas by use of supplemental data sheet.
** Provide details on other areas examined

☑ BOLTS, STUDS, AND WASHERS VT-1	SAT	*UN-SAT	N/A
Loose Members	☐	☐	☑
Cracks	☑	☐	☐
Corrosion	☑	☐	☐
Gouges	☑	☐	☐
Thread Damage	☑	☐	☐
Deformation	☑	☐	☐
Protective Coating	☐	☐	☑
Evidence of Leakage	☐	☐	☑
Other **	☐	☐	☑

Comments NONE

	ANII Review C G Kiehl	Date 10/16/01
Reviewed By Gary A. Loftus	Level III	Date 10-16-01

Revision 1.0

SHARED

Plant / Unit	Line Number/Examination Area/Weld No.	Drawing Number	Sheet Number
Farley / 1	ALA1-1300-N30 REACTOR VESSEL NUTS	ALA1-1300	S01F1V094

Photos	Sketch	Resolution	Technique	
☐ Yes ☐ B/W ☑ No ☐ Color	☐ Yes ☑ No	☐ 1/32" Division (Scale) ☑ 1/32" Line (Gray Card)	☑ Direct ☐ Video ☐ Remote	WO / WA N/A Procedure No. FNP-0-NDE-100.21 Revision No. 1.0 / N/A

Equipment	Lighting	Tools			
☐ Mirror ☑ N/A ☐ Magnifier ☐ CCTV	☐ Ambient ☑ Flashlight ☐ Droplight	☐ Scale ☐ Micrometer ☐ Caliper	☐ Depth Gauge ☐ Comparator ☐ Weld Gauge	☐ Level ☑ N/A ☐	

Examiner/Initial Sig.	Level
Harry Ackerman	II
Clyde W. Kiehl	II

Date (Month-Day-Year) 10/13/01

☐ WELDS AND BASE MATERIAL VT-1	SAT	*UN-SAT	N/A
Ground Blend Material	☐	☐	☑
Undercut	☐	☐	☑
Corrosion Build-up	☐	☐	☑
Gouges	☐	☐	☑
Evidence of Leakage	☐	☐	☑
Arc Strikes	☐	☐	☑
Cracks	☐	☐	☑
Other**	☐	☐	☑

* Provide details on unsat areas by use of supplemental data sheet.
** Provide details on other areas examined

☑ BOLTS, STUDS, AND WASHERS VT-1	SAT	*UN-SAT	N/A
Loose Members	☐	☐	☑
Cracks	☑	☐	☐
Corrosion	☑	☐	☐
Gouges	☑	☐	☐
Thread Damage	☑	☐	☐
Deformation	☑	☐	☐
Protective Coating	☐	☐	☑
Evidence of Leakage	☐	☐	☑
Other **	☐	☐	☑

Comments NONE

	ANII Review	Date
	C.G. Warnock	10/16/01
Reviewed By Gary A. Lofton	Level III	Date 10-16-01

Revision 1.0

Farley Nuc[illegible] t
Visual Examination Record VT-1

SHARED

FNP-0-ND[illegible] .21
Southern Nuclear Operating Company

Plant / Unit	Line Number/Examination Area/Weld No.	Drawing Number	Sheet Number
Farley / 1	ALA1-1300-N31 REACTOR VESSEL NUTS	ALA1-1300	S01F1V095

Photos	Sketch	Resolution	Technique	
☐ Yes ☐ B/W ☑ No ☐ Color	☐ Yes ☑ No	☐ 1/32" Division (Scale) ☑ 1/32" Line (Gray Card)	☑ Direct ☐ Video ☐ Remote	WO / WA N/A Procedure No. FNP-0-NDE-100.21 Revision No. 1.0 / N/A

Equipment	Lighting	Tools			Examiner/Initial Sig.	Level
☐ Mirror ☑ N/A ☐ Magnifier ☐ CCTV	☐ Ambient ☑ Flashlight ☐ Droplight	☐ Scale ☐ Micrometer ☐ Caliper	☐ Depth Gauge ☐ Comparator ☐ Weld Gauge	☐ Level ☑ N/A ☐	Harry Ackerman Harry M. Ackerman	II
					Examiner/Initial Sig. Clyde W. Kiehl Clyde W Kiehl	II
					Date (Month-Day-Year) 10/13/01	

☐ WELDS AND BASE MATERIAL VT-1	SAT	*UN-SAT	N/A
Ground Blend Material	☐	☐	☑
Undercut	☐	☐	☑
Corrosion Build-up	☐	☐	☑
Gouges	☐	☐	☑
Evidence of Leakage	☐	☐	☑
Arc Strikes	☐	☐	☑
Cracks	☐	☐	☑
Other**	☐	☐	☑

* Provide details on unsat areas by use of supplemental data sheet.
** Provide details on other areas examined

☑ BOLTS, STUDS, AND WASHERS VT-1	SAT	*UN-SAT	N/A
Loose Members	☐	☐	☑
Cracks	☑	☐	☐
Corrosion	☑	☐	☐
Gouges	☑	☐	☐
Thread Damage	☑	☐	☐
Deformation	☑	☐	☐
Protective Coating	☐	☐	☑
Evidence of Leakage	☐	☐	☑
Other **	☐	☐	☑

Comments NONE

	ANII Review E G Ward	Date 10/16/01
Reviewed By Gary A. Lofton	Level III	Date 10-16-01

Revision 1.0

SHARED

Plant / Unit	Line Number/Examination Area/Weld No.	Drawing Number	Sheet Number
Farley / 1	ALA1-1300-N32 REACTOR VESSEL NUTS	ALA1-1300	S01F1V096

Photos	Sketch	Resolution	Technique	
☐ Yes ☐ B/W ☑ No ☐ Color	☐ Yes ☑ No	☐ 1/32" Division (Scale) ☑ 1/32" Line (Gray Card)	☑ Direct ☐ Video ☐ Remote	WO / WA N/A Procedure No. FNP-0-NDE-100.21 Revision No. 1.0 / N/A

Equipment	Lighting	Tools			Examiner/Initial Sig.	Level
☐ Mirror ☑ N/A ☐ Magnifier ☐ CCTV	☐ Ambient ☑ Flashlight ☐ Droplight	☐ Scale ☐ Micrometer ☐ Caliper	☐ Depth Gauge ☐ Comparator ☐ Weld Gauge	☐ Level ☑ N/A ☐	Harry Ackerman Harry M. Ackerman	II
					Examiner/Initial Sig. Clyde W. Kiehl Clyde W Kiehl	II
					Date (Month-Day-Year) 10/13/01	

☐ WELDS AND BASE MATERIAL VT-1	SAT	*UN-SAT	N/A
Ground Blend Material	☐	☐	☑
Undercut	☐	☐	☑
Corrosion Build-up	☐	☐	☑
Gouges	☐	☐	☑
Evidence of Leakage	☐	☐	☑
Arc Strikes	☐	☐	☑
Cracks	☐	☐	☑
Other**	☐	☐	☑

* Provide details on unsat areas by use of supplemental data sheet.
** Provide details on other areas examined

☑ BOLTS, STUDS, AND WASHERS VT-1	SAT	*UN-SAT	N/A
Loose Members	☐	☐	☑
Cracks	☑	☐	☐
Corrosion	☑	☐	☐
Gouges	☑	☐	☐
Thread Damage	☑	☐	☐
Deformation	☑	☐	☐
Protective Coating	☐	☐	☑
Evidence of Leakage	☐	☐	☑
Other **	☐	☐	☑

Comments NONE

	ANII Review	Date 10/16/01
Reviewed By	Level III	Date 10-16-01

SHARED

Plant / Unit	Line Number/Examination Area/Weld No.	Drawing Number	Sheet Number
Farley / 1	ALA1-1300-N33 REACTOR VESSEL NUTS	ALA1-1300	S01F1V097

Photos	Sketch	Resolution	Technique	
☐ Yes ☐ B/W ☑ No ☐ Color	☐ Yes ☑ No	☐ 1/32" Division (Scale) ☑ 1/32" Line (Gray Card)	☑ Direct ☐ Video ☐ Remote	WO / WA N/A Procedure No. FNP-0-NDE-100.21 Revision No. 1.0 / N/A

Equipment	Lighting	Tools			Examiner/Initial Sig.	Level
☐ Mirror ☑ N/A ☐ Magnifier ☐ CCTV	☐ Ambient ☑ Flashlight ☐ Droplight	☐ Scale ☐ Micrometer ☐ Caliper	☐ Depth Gauge ☐ Comparator ☐ Weld Gauge	☐ Level ☑ N/A ☐	Harry Ackerman Harry M. Ackerman	II
					Examiner/Initial Sig. Clyde W. Kiehl Clyde W Kiehl	II
					Date (Month-Day-Year) 10/13/01	

☐ WELDS AND BASE MATERIAL VT-1	SAT	*UN-SAT	N/A
Ground Blend Material	☐	☐	☑
Undercut	☐	☐	☑
Corrosion Build-up	☐	☐	☑
Gouges	☐	☐	☑
Evidence of Leakage	☐	☐	☑
Arc Strikes	☐	☐	☑
Cracks	☐	☐	☑
Other**	☐	☐	☑

* Provide details on unsat areas by use of supplemental data sheet.
** Provide details on other areas examined

☑ BOLTS, STUDS, AND WASHERS VT-1	SAT	*UN-SAT	N/A
Loose Members	☐	☐	☑
Cracks	☑	☐	☐
Corrosion	☑	☐	☐
Gouges	☑	☐	☐
Thread Damage	☑	☐	☐
Deformation	☑	☐	☐
Protective Coating	☐	☐	☑
Evidence of Leakage	☐	☐	☑
Other **	☐	☐	☑

Comments NONE

	ANII Review C G Warnock	Date 10/16/01
Reviewed By Larry A. Loftus	Level III	Date 10-16-01

Plant / Unit	Line Number/Examination Area/Weld No.	Drawing Number	Sheet Number
Farley / 1	ALA1-1300-N34 REACTOR VESSEL NUTS	ALA1-1300	S01F1V098

Photos	Sketch	Resolution	Technique	
☐ Yes ☐ B/W ☑ No ☐ Color	☐ Yes ☑ No	☐ 1/32" Division (Scale) ☑ 1/32" Line (Gray Card)	☑ Direct ☐ Video ☐ Remote	WO / WA N/A Procedure No. FNP-0-NDE-100.21 Revision No. 1.0 / N/A

Equipment	Lighting	Tools			Examiner/Initial Sig.	Level
☐ Mirror ☑ N/A ☐ Magnifier ☐ CCTV	☐ Ambient ☑ Flashlight ☐ Droplight	☐ Scale ☐ Micrometer ☐ Caliper	☐ Depth Gauge ☐ Comparator ☐ Weld Gauge	☐ Level ☑ N/A ☐	Harry M. Ackerman	II
					Examiner/Initial Sig. Clyde W. Kiehl	II
					Date (Month-Day-Year) 10/13/01	

☐ WELDS AND BASE MATERIAL VT-1	SAT	*UN-SAT	N/A
Ground Blend Material	☐	☐	☑
Undercut	☐	☐	☑
Corrosion Build-up	☐	☐	☑
Gouges	☐	☐	☑
Evidence of Leakage	☐	☐	☑
Arc Strikes	☐	☐	☑
Cracks	☐	☐	☑
Other**	☐	☐	☑

* Provide details on unsat areas by use of supplemental data sheet.
** Provide details on other areas examined

☐ BOLTS, STUDS, AND WASHERS VT-1	SAT	*UN-SAT	N/A
Loose Members	☐	☐	☑
Cracks	☑	☐	☐
Corrosion	☑	☐	☐
Gouges	☑	☐	☐
Thread Damage	☑	☐	☐
Deformation	☑	☐	☐
Protective Coating	☐	☐	☑
Evidence of Leakage	☐	☐	☑
Other **	☐	☐	☑

Comments NONE

	ANII Review C G Wamel	Date 10/16/01
Reviewed By Harry A. Lofton	Level III	Date 10-16-01

Farley Nuc[illegible] t
Visual Examination Record VT-1

SHARED

FNP-0-NDE- 21
Southern Nuclear Operating Company

Plant / Unit	Line Number/Examination Area/Weld No.	Drawing Number	Sheet Number
Farley / 1	ALA1-1300-N35 REACTOR VESSEL NUTS	ALA1-1300	S01F1V099

Photos	Sketch	Resolution	Technique	
☐ Yes ☐ B/W ☑ No ☐ Color	☐ Yes ☑ No	☐ 1/32" Division (Scale) ☑ 1/32" Line (Gray Card)	☑ Direct ☐ Video ☐ Remote	WO / WA N/A Procedure No. FNP-0-NDE-100.21 Revision No. 1.0 / N/A

Equipment	Lighting	Tools			Examiner/Initial Sig.	Level
☐ Mirror ☑ N/A ☐ Magnifier ☐ CCTV	☐ Ambient ☑ Flashlight ☐ Droplight	☐ Scale ☐ Micrometer ☐ Caliper	☐ Depth Gauge ☐ Comparator ☐ Weld Gauge	☐ Level ☑ N/A ☐ _____	Harry Ackerman Harry M. Ackerman	II
					Examiner/Initial Sig. Clyde W. Kiehl Clyde W Kiehl	II
					Date (Month-Day-Year) 10/13/01	

☐ WELDS AND BASE MATERIAL VT-1	SAT	*UN-SAT	N/A
Ground Blend Material	☐	☐	☑
Undercut	☐	☐	☑
Corrosion Build-up	☐	☐	☑
Gouges	☐	☐	☑
Evidence of Leakage	☐	☐	☑
Arc Strikes	☐	☐	☑
Cracks	☐	☐	☑
Other**	☐	☐	☑

* Provide details on unsat areas by use of supplemental data sheet.
** Provide details on other areas examined

☑ BOLTS, STUDS, AND WASHERS VT-1	SAT	*UN-SAT	N/A
Loose Members	☐	☐	☑
Cracks	☑	☐	☐
Corrosion	☑	☐	☐
Gouges	☑	☐	☐
Thread Damage	☑	☐	☐
Deformation	☑	☐	☐
Protective Coating	☐	☐	☑
Evidence of Leakage	☐	☐	☑
Other **	☐	☐	☑

Comments NONE

	ANII Review C G Wand	Date 10/16/01
Reviewed By Gary A. Lettes	Level III	Date 10-16-01

Revision 1.0

SHARED

Plant / Unit	Line Number/Examination Area/Weld No.	Drawing Number	Sheet Number
Farley / 1	ALA1-1300-N36 REACTOR VESSEL NUTS	ALA1-1300	S01F1V100

Photos	Sketch	Resolution	Technique	
☐ Yes ☐ B/W ☑ No ☐ Color	☐ Yes ☑ No	☐ 1/32" Division (Scale) ☑ 1/32" Line (Gray Card)	☑ Direct ☐ Video ☐ Remote	WO / WA N/A Procedure No. FNP-0-NDE-100.21 Revision No. 1.0 / N/A

Equipment	Lighting	Tools			Examiner/Initial Sig.	Level
☐ Mirror ☑ N/A ☐ Magnifier ☐ CCTV	☐ Ambient ☑ Flashlight ☐ Droplight	☐ Scale ☐ Micrometer ☐ Caliper	☐ Depth Gauge ☐ Comparator ☐ Weld Gauge	☐ Level ☑ N/A ☐	Harry Ackerman Sig. Harry M. Ackerman	II
					Examiner/Initial Clyde W. Kiehl Sig. Clyde W Kiehl	II
					Date (Month-Day-Year) 10/13/01	

☐ WELDS AND BASE MATERIAL VT-1	SAT	*UN-SAT	N/A
Ground Blend Material	☐	☐	☑
Undercut	☐	☐	☑
Corrosion Build-up	☐	☐	☑
Gouges	☐	☐	☑
Evidence of Leakage	☐	☐	☑
Arc Strikes	☐	☐	☑
Cracks	☐	☐	☑
Other**	☐	☐	☑

* Provide details on unsat areas by use of supplemental data sheet.
** Provide details on other areas examined

☑ BOLTS, STUDS, AND WASHERS VT-1	SAT	*UN-SAT	N/A
Loose Members	☐	☐	☑
Cracks	☑	☐	☐
Corrosion	☑	☐	☐
Gouges	☑	☐	☐
Thread Damage	☑	☐	☐
Deformation	☑	☐	☐
Protective Coating	☐	☐	☑
Evidence of Leakage	☐	☐	☑
Other **	☐	☐	☑

Comments NONE

	ANII Review [illegible]	Date 10/16/01
Reviewed By [illegible]	Level III	Date 10-16-01

Plant / Unit	Line Number/Examination Area/Weld No.	Drawing Number	Sheet Number
Farley / 1	ALA1-1300-N37 REACTOR VESSEL NUTS	ALA1-1300	S01F1V101

Photos	Sketch	Resolution	Technique	
☐ Yes ☐ B/W ☑ No ☐ Color	☐ Yes ☑ No	☐ 1/32" Division (Scale) ☑ 1/32" Line (Gray Card)	☑ Direct ☐ Video ☐ Remote	WO / WA N/A Procedure No. FNP-0-NDE-100.21 Revision No. 1.0 / N/A

Equipment	Lighting	Tools			Examiner/Initial Sig.	Level
☐ Mirror ☑ N/A ☐ Magnifier ☐ CCTV	☐ Ambient ☑ Flashlight ☐ Droplight	☐ Scale ☐ Micrometer ☐ Caliper	☐ Depth Gauge ☐ Comparator ☐ Weld Gauge	☐ Level ☑ N/A ☐	Harry Ackerman Harry M Ackerman	II
					Examiner/Initial Sig. Clyde W. Kiehl Clyde W Kiehl	II
					Date (Month-Day-Year) 10/13/01	

☐ WELDS AND BASE MATERIAL VT-1	SAT	*UN-SAT	N/A
Ground Blend Material	☐	☐	☑
Undercut	☐	☐	☑
Corrosion Build-up	☐	☐	☑
Gouges	☐	☐	☑
Evidence of Leakage	☐	☐	☑
Arc Strikes	☐	☐	☑
Cracks	☐	☐	☑
Other**	☐	☐	☑

* Provide details on unsat areas by use of supplemental data sheet.
** Provide details on other areas examined

☑ BOLTS, STUDS, AND WASHERS VT-1	SAT	*UN-SAT	N/A
Loose Members	☐	☐	☑
Cracks	☑	☐	☐
Corrosion	☑	☐	☐
Gouges	☑	☐	☐
Thread Damage	☑	☐	☐
Deformation	☑	☐	☐
Protective Coating	☐	☐	☑
Evidence of Leakage	☐	☐	☑
Other **	☐	☐	☑

Comments NONE

	ANII Review	Date
	C G Ward	10/16/01
Reviewed By Gary A. Lofters	Level III	Date 10-16-01

Plant / Unit	Line Number/Examination Area/Weld No.	Drawing Number	Sheet Number
Farley / 1	ALA1-1300-N38 REACTOR VESSEL NUTS	ALA1-1300	S01F1V102

Photos	Sketch	Resolution	Technique	
☐ Yes ☐ B/W ☑ No ☐ Color	☐ Yes ☑ No	☐ 1/32" Division (Scale) ☑ 1/32" Line (Gray Card)	☑ Direct ☐ Video ☐ Remote	WO / WA N/A Procedure No. FNP-0-NDE-100.21 Revision No. 1.0 / N/A

Equipment	Lighting	Tools			Examiner/Initial Sig.	Level
☐ Mirror ☑ N/A ☐ Magnifier ☐ CCTV	☐ Ambient ☑ Flashlight ☐ Droplight	☐ Scale ☐ Micrometer ☐ Caliper	☐ Depth Gauge ☐ Comparator ☐ Weld Gauge	☐ Level ☑ N/A ☐	Harry Ackerman Harry M. Ackerman	II
					Examiner/Initial Sig. Clyde W. Kiehl Clyde W Kiehl	II
					Date (Month/Day-Year) 10/13/01	

☐ WELDS AND BASE MATERIAL VT-1	SAT	*UN-SAT	N/A
Ground Blend Material	☐	☐	☑
Undercut	☐	☐	☑
Corrosion Build-up	☐	☐	☑
Gouges	☐	☐	☑
Evidence of Leakage	☐	☐	☑
Arc Strikes	☐	☐	☑
Cracks	☐	☐	☑
Other**	☐	☐	☑

* Provide details on unsat areas by use of supplemental data sheet.
** Provide details on other areas examined

☑ BOLTS, STUDS, AND WASHERS VT-1	SAT	*UN-SAT	N/A
Loose Members	☐	☐	☑
Cracks	☑	☐	☐
Corrosion	☑	☐	☐
Gouges	☑	☐	☐
Thread Damage	☑	☐	☐
Deformation	☑	☐	☐
Protective Coating	☐	☐	☑
Evidence of Leakage	☐	☐	☑
Other **	☐	☐	☑

Comments NONE

	ANII Review C G Wood	Date 10/16/01
Reviewed By Harry A. Loftus	Level III	Date 10-16-01

SHARED

Plant / Unit	Line Number/Examination Area/Weld No.	Drawing Number	Sheet Number
Farley / 1	ALA1-1300-W20 REACTOR VESSEL WASHERS	ALA1-1300	S01F1V065

Photos	Sketch	Resolution	Technique	
☐ Yes ☐ B/W ☑ No ☐ Color	☐ Yes ☑ No	☐ 1/32" Division (Scale) ☑ 1/32" Line (Gray Card)	☑ Direct ☐ Video ☐ Remote	WO / WA N/A Procedure No. FNP-0-NDE-100.21 Revision No. 1.0 / N/A

Equipment	Lighting	Tools			Examiner/Initial Sig.	Level
☐ Mirror ☑ N/A ☐ Magnifier ☐ CCTV	☐ Ambient ☑ Flashlight ☐ Droplight	☐ Scale ☐ Micrometer ☐ Caliper	☐ Depth Gauge ☐ Comparator ☐ Weld Gauge	☐ Level ☑ N/A ☐	Clyde W Kiehl Examiner/Initial Sig. Harry Ackerman	II Level II
					Date (Month-Day-Year) 10/13/01	

☐ WELDS AND BASE MATERIAL VT-1	SAT	*UN-SAT	N/A
Ground Blend Material	☐	☐	☑
Undercut	☐	☐	☑
Corrosion Build-up	☐	☐	☑
Gouges	☐	☐	☑
Evidence of Leakage	☐	☐	☑
Arc Strikes	☐	☐	☑
Cracks	☐	☐	☑
Other**	☐	☐	☑

* Provide details on unsat areas by use of supplemental data sheet.
** Provide details on other areas examined

☑ BOLTS, STUDS, AND WASHERS VT-1	SAT	*UN-SAT	N/A
Loose Members	☐	☐	☑
Cracks	☑	☐	☐
Corrosion	☑	☐	☐
Gouges	☑	☐	☐
Thread Damage	☐	☐	☑
Deformation	☑	☐	☐
Protective Coating	☐	☐	☑
Evidence of Leakage	☐	☐	☑
Other **	☐	☐	☑

Comments N/A

	ANII Review	Date
	CGuerard	10/16/01
Reviewed By Darryl A. Lofton	Level III	Date 10-16-01

Farley Nuc[illegible] ant
Visual Examination Record VT-1

SHARED

FNP-0-ND 0.21
Southern Nuclear Operating Company

Plant / Unit	Line Number/Examination Area/Weld No.	Drawing Number	Sheet Number
Farley / 1	ALA1-1300-W21 REACTOR VESSEL WASHERS	ALA1-1300	S01F1V066

Photos	Sketch	Resolution	Technique	
☐ Yes ☐ B/W ☑ No ☐ Color	☐ Yes ☑ No	☐ 1/32" Division (Scale) ☑ 1/32" Line (Gray Card)	☑ Direct ☐ Video ☐ Remote	WO / WA N/A Procedure No. FNP-0-NDE-100.21 Revision No. 1.0 / N/A

Equipment	Lighting	Tools			Examiner/Initial Sig.	Level
☐ Mirror ☑ N/A ☐ Magnifier ☐ CCTV	☐ Ambient ☑ Flashlight ☐ Droplight	☐ Scale ☐ Micrometer ☐ Caliper	☐ Depth Gauge ☐ Comparator ☐ Weld Gauge	☐ Level ☑ N/A ☐	Clyde W Kiehl Clyde W Kiehl	II
					Examiner/Initial Sig. Harry Ackerman Harry M. Ackerman	II
					Date (Month-Day-Year) 10/13/01	

☐ WELDS AND BASE MATERIAL VT-1	SAT	*UN-SAT	N/A
Ground Blend Material	☐	☐	☑
Undercut	☐	☐	☑
Corrosion Build-up	☐	☐	☑
Gouges	☐	☐	☑
Evidence of Leakage	☐	☐	☑
Arc Strikes	☐	☐	☑
Cracks	☐	☐	☑
Other**	☐	☐	☑

* Provide details on unsat areas by use of supplemental data sheet.
** Provide details on other areas examined

☑ BOLTS, STUDS, AND WASHERS VT-1	SAT	*UN-SAT	N/A
Loose Members	☐	☐	☑
Cracks	☑	☐	☐
Corrosion	☑	☐	☐
Gouges	☑	☐	☐
Thread Damage	☐	☐	☑
Deformation	☑	☐	☐
Protective Coating	☐	☐	☑
Evidence of Leakage	☐	☐	☑
Other **	☐	☐	☑

Comments NONE

	ANII Review [illegible]	Date 10/16/01
Reviewed By [illegible]	Level III	Date 10-16-01

Revision 1.0

SHARED

Plant / Unit	Line Number/Examination Area/Weld No.	Drawing Number	Sheet Number
Farley / 1	ALA1-1300-W22 REACTOR VESSEL WASHERS	ALA1-1300	S01F1V067

Photos	Sketch	Resolution	Technique	
☐ Yes ☐ B/W ☑ No ☐ Color	☐ Yes ☑ No	☐ 1/32" Division (Scale) ☑ 1/32" Line (Gray Card)	☑ Direct ☐ Video ☐ Remote	WO / WA N/A Procedure No. FNP-0-NDE-100.21 Revision No. 1.0 / N/A

Equipment	Lighting	Tools		
☐ Mirror ☑ N/A ☐ Magnifier ☐ CCTV	☐ Ambient ☑ Flashlight ☐ Droplight	☐ Scale ☐ Depth Gauge ☐ Level ☐ Micrometer ☐ Comparator ☑ N/A ☐ Caliper ☐ Weld Gauge ☐		

Examiner/Initial Sig.	Level
Clyde W. Kiehl	II
Harry Ackerman	II

Date (Month-Day-Year) 10/13/01

☐ WELDS AND BASE MATERIAL VT-1	SAT	*UN-SAT	N/A
Ground Blend Material	☐	☐	☑
Undercut	☐	☐	☑
Corrosion Build-up	☐	☐	☑
Gouges	☐	☐	☑
Evidence of Leakage	☐	☐	☑
Arc Strikes	☐	☐	☑
Cracks	☐	☐	☑
Other**	☐	☐	☑

* Provide details on unsat areas by use of supplemental data sheet.
** Provide details on other areas examined

☑ BOLTS, STUDS, AND WASHERS VT-1	SAT	*UN-SAT	N/A
Loose Members	☐	☐	☑
Cracks	☑	☐	☐
Corrosion	☑	☐	☐
Gouges	☑	☐	☐
Thread Damage	☐	☐	☑
Deformation	☑	☐	☐
Protective Coating	☐	☐	☑
Evidence of Leakage	☐	☐	☑
Other **	☐	☐	☑

Comments NONE

	ANII Review [illegible]	Date 10/16/01
Reviewed By Harry A. Lotter	Level II	Date 10-16-01

Revision 1.0

Farley Nuc ant
Visual Examination Record VT-1

SHARED

FNP-0-NL :0.21
Southern Nuclear Operating Company

Plant / Unit	Line Number/Examination Area/Weld No.	Drawing Number	Sheet Number
Farley / 1	ALA1-1300-W23 REACTOR VESSEL WASHERS	ALA1-1300	S01F1V068

Photos	Sketch	Resolution	Technique	
☐ Yes ☐ B/W ☑ No ☐ Color	☐ Yes ☑ No	☐ 1/32" Division (Scale) ☑ 1/32" Line (Gray Card)	☑ Direct ☐ Video ☐ Remote	WO / WA N/A Procedure No. FNP-0-NDE-100.21 Revision No. 1.0 / N/A

Equipment	Lighting	Tools			Examiner/Initial Sig.	Level
☐ Mirror ☑ N/A ☐ Magnifier ☐ CCTV	☐ Ambient ☑ Flashlight ☐ Droplight	☐ Scale ☐ Micrometer ☐ Caliper	☐ Depth Gauge ☐ Comparator ☐ Weld Gauge	☐ Level ☑ N/A ☐	Clyde W. Kiehl Clyde W Kiehl	II
					Examiner/Initial Sig. Harry Ackerman Harry M. Ackerman	II
					Date (Month-Day-Year) 10/13/01	

☐ WELDS AND BASE MATERIAL VT-1	SAT	*UN-SAT	N/A
Ground Blend Material	☐	☐	☑
Undercut	☐	☐	☑
Corrosion Build-up	☐	☐	☑
Gouges	☐	☐	☑
Evidence of Leakage	☐	☐	☑
Arc Strikes	☐	☐	☑
Cracks	☐	☐	☑
Other**	☐	☐	☑

* Provide details on unsat areas by use of supplemental data sheet.
** Provide details on other areas examined

☑ BOLTS, STUDS, AND WASHERS VT-1	SAT	*UN-SAT	N/A
Loose Members	☐	☐	☑
Cracks	☑	☐	☐
Corrosion	☑	☐	☐
Gouges	☑	☐	☐
Thread Damage	☐	☐	☑
Deformation	☑	☐	☐
Protective Coating	☐	☐	☑
Evidence of Leakage	☐	☐	☑
Other **	☐	☐	☑

Comments NONE

	ANII Review C G Wood	Date 10/16/01
Reviewed By Larry D. Rothus	Level III	Date 10-16-01

Revision 1.0

SHARED

Plant / Unit	Line Number/Examination Area/Weld No.	Drawing Number	Sheet Number
Farley / 1	ALA1-1300-W24 REACTOR VESSEL WASHERS	ALA1-1300	S01F1V069

Photos	Sketch	Resolution	Technique	
☐ Yes ☐ B/W ☑ No ☐ Color	☐ Yes ☑ No	☐ 1/32" Division (Scale) ☑ 1/32" Line (Gray Card)	☑ Direct ☐ Video ☐ Remote	WO / WA N/A Procedure No. FNP-0-NDE-100.21 Revision No. 1.0 / N/A

Equipment	Lighting	Tools			Examiner/Initial Sig.	Level
☐ Mirror ☑ N/A ☐ Magnifier ☐ CCTV	☐ Ambient ☑ Flashlight ☐ Droplight	☐ Scale ☐ Micrometer ☐ Caliper	☐ Depth Gauge ☐ Comparator ☐ Weld Gauge	☐ Level ☑ N/A ☐	Clyde W. Kiehl Clyde W Kiehl	II
					Examiner/Initial Sig. Harry Ackerman Harry M. Ackerman	II
					Date (Month-Day-Year) 10/13/01	

☐ WELDS AND BASE MATERIAL VT-1	SAT	*UN-SAT	N/A
Ground Blend Material	☐	☐	☑
Undercut	☐	☐	☑
Corrosion Build-up	☐	☐	☑
Gouges	☐	☐	☑
Evidence of Leakage	☐	☐	☑
Arc Strikes	☐	☐	☑
Cracks	☐	☐	☑
Other**	☐	☐	☑

* Provide details on unsat areas by use of supplemental data sheet.
** Provide details on other areas examined

☑ BOLTS, STUDS, AND WASHERS VT-1	SAT	*UN-SAT	N/A
Loose Members	☐	☐	☑
Cracks	☑	☐	☐
Corrosion	☑	☐	☐
Gouges	☑	☐	☐
Thread Damage	☐	☐	☑
Deformation	☑	☐	☐
Protective Coating	☐	☐	☑
Evidence of Leakage	☐	☐	☑
Other **	☐	☐	☑

Comments NONE

	ANII Review C G Wand	Date 10/16/01
Reviewed By Larry A. Lofters	Level III	Date 10-16-01

SHARED

Plant / Unit	Line Number/Examination Area/Weld No.	Drawing Number	Sheet Number
Farley / 1	ALA1-1300-W25 REACTOR VESSEL WASHERS	ALA1-1300	S01F1V070

Photos	Sketch	Resolution	Technique	
☐ Yes ☐ B/W ☑ No ☐ Color	☐ Yes ☑ No	☐ 1/32" Division (Scale) ☑ 1/32" Line (Gray Card)	☑ Direct ☐ Video ☐ Remote	**WO / WA** N/A **Procedure No.** FNP-0-NDE-100.21 **Revision No.** 1.0 / N/A

Equipment	Lighting	Tools		
☐ Mirror ☑ N/A ☐ Magnifier ☐ CCTV	☐ Ambient ☑ Flashlight ☐ Droplight	☐ Scale ☐ Depth Gauge ☐ Level ☐ Micrometer ☐ Comparator ☑ N/A ☐ Caliper ☐ Weld Gauge ☐		

Examiner/Initial Sig.	Level
Clyde W. Kiehl	II
Harry Ackerman	II

Date (Month-Day-Year) 10/13/01

☐ WELDS AND BASE MATERIAL VT-1	SAT	*UN-SAT	N/A
Ground Blend Material	☐	☐	☑
Undercut	☐	☐	☑
Corrosion Build-up	☐	☐	☑
Gouges	☐	☐	☑
Evidence of Leakage	☐	☐	☑
Arc Strikes	☐	☐	☑
Cracks	☐	☐	☑
Other**	☐	☐	☑

* Provide details on unsat areas by use of supplemental data sheet.
** Provide details on other areas examined

☑ BOLTS, STUDS, AND WASHERS VT-1	SAT	*UN-SAT	N/A
Loose Members	☐	☐	☑
Cracks	☑	☐	☐
Corrosion	☑	☐	☐
Gouges	☑	☐	☐
Thread Damage	☐	☐	☑
Deformation	☑	☐	☐
Protective Coating	☐	☐	☑
Evidence of Leakage	☐	☐	☑
Other **	☐	☐	☑

Comments NONE

	ANII Review	**Date** 10/16/01
Reviewed By	**Level** III	**Date** 10-16-01

Farley Nuc[illegible]nt
Visual Examination Record VT-1

SHARED

FNP-0-ND[illegible] 0.21
Southern Nuclear Operating Company

Plant / Unit	Line Number/Examination Area/Weld No.	Drawing Number	Sheet Number
Farley / 1	ALA1-1300-W26 REACTOR VESSEL WASHERS	ALA1-1300	S01F1V071

Photos	Sketch	Resolution	Technique	
☐ Yes ☐ B/W ☑ No ☐ Color	☐ Yes ☑ No	☐ 1/32" Division (Scale) ☑ 1/32" Line (Gray Card)	☑ Direct ☐ Video ☐ Remote	WO / WA N/A Procedure No. FNP-0-NDE-100.21 Revision No. 1.0 / N/A

Equipment	Lighting	Tools			Examiner/Initial Sig.	Level
☐ Mirror ☑ N/A ☐ Magnifier ☐ CCTV	☐ Ambient ☑ Flashlight ☐ Droplight	☐ Scale ☐ Micrometer ☐ Caliper	☐ Depth Gauge ☐ Comparator ☐ Weld Gauge	☐ Level ☑ N/A ☐	Clyde W. Kiehl Clyde W. Kiehl	II
					Examiner/Initial Sig. Harry Ackerman Harry M. Ackerman	II
					Date (Month-Day-Year) 10/13/01	

☐ WELDS AND BASE MATERIAL VT-1	SAT	*UN-SAT	N/A
Ground Blend Material	☐	☐	☑
Undercut	☐	☐	☑
Corrosion Build-up	☐	☐	☑
Gouges	☐	☐	☑
Evidence of Leakage	☐	☐	☑
Arc Strikes	☐	☐	☑
Cracks	☐	☐	☑
Other**	☐	☐	☑

* Provide details on unsat areas by use of supplemental data sheet.
** Provide details on other areas examined

☑ BOLTS, STUDS, AND WASHERS VT-1	SAT	*UN-SAT	N/A
Loose Members	☐	☐	☑
Cracks	☑	☐	☐
Corrosion	☑	☐	☐
Gouges	☑	☐	☐
Thread Damage	☐	☐	☑
Deformation	☑	☐	☐
Protective Coating	☐	☐	☑
Evidence of Leakage	☐	☐	☑
Other **	☐	☐	☑

Comments NONE

	ANII Review	Date
	L G Wood	10/16/01
Reviewed By Larry A. Lofthus	Level III	Date 10-16-01

Revision 1.0

SHARED

Plant / Unit	Line Number/Examination Area/Weld No.	Drawing Number	Sheet Number
Farley / 1	ALA1-1300-W27 REACTOR VESSEL WASHERS	ALA1-1300	S01F1V072

Photos	Sketch	Resolution	Technique	
☐ Yes ☐ B/W ☑ No ☐ Color	☐ Yes ☑ No	☐ 1/32" Division (Scale) ☑ 1/32" Line (Gray Card)	☑ Direct ☐ Video ☐ Remote	WO / WA N/A Procedure No. FNP-0-NDE-100.21 Revision No. 1.0 / N/A

Equipment	Lighting	Tools			Examiner/Initial Sig.	Level
☐ Mirror ☑ N/A ☐ Magnifier ☐ CCTV	☐ Ambient ☑ Flashlight ☐ Droplight	☐ Scale ☐ Micrometer ☐ Caliper	☐ Depth Gauge ☐ Comparator ☐ Weld Gauge	☐ Level ☑ N/A ☐	Clyde W. Kiehl Clyde W Kiehl	II
					Examiner/Initial Sig. Harry Ackerman Harry M. Ackerman	II
					Date (Month-Day-Year) 10/13/01	

☐ WELDS AND BASE MATERIAL VT-1	SAT	*UN-SAT	N/A
Ground Blend Material	☐	☐	☑
Undercut	☐	☐	☑
Corrosion Build-up	☐	☐	☑
Gouges	☐	☐	☑
Evidence of Leakage	☐	☐	☑
Arc Strikes	☐	☐	☑
Cracks	☐	☐	☑
Other**	☐	☐	☑

* Provide details on unsat areas by use of supplemental data sheet.
** Provide details on other areas examined

☑ BOLTS, STUDS, AND WASHERS VT-1	SAT	*UN-SAT	N/A
Loose Members	☐	☐	☑
Cracks	☑	☐	☐
Corrosion	☑	☐	☐
Gouges	☑	☐	☐
Thread Damage	☐	☐	☑
Deformation	☑	☐	☐
Protective Coating	☐	☐	☑
Evidence of Leakage	☐	☐	☑
Other **	☐	☐	☑

Comments NONE

	ANII Review C G Ward	Date 10/16/01
Reviewed By Gary P. Lofters	Level III	Date 10-16-01

Farley Nuc[illegible]nt
Visual Examination Record VT-1

SHARED

FNP-0-N[illegible] .21
Southern Nuclear Operating Company

Plant / Unit	Line Number/Examination Area/Weld No.	Drawing Number	Sheet Number
Farley / 1	ALA1-1300-W28 REACTOR VESSEL WASHERS	ALA1-1300	S01F1V073

Photos	Sketch	Resolution	Technique	
☐ Yes ☐ B/W ☑ No ☐ Color	☐ Yes ☑ No	☐ 1/32" Division (Scale) ☑ 1/32" Line (Gray Card)	☑ Direct ☐ Video ☐ Remote	WO / WA N/A Procedure No. FNP-0-NDE-100.21 Revision No. 1.0 / N/A

Equipment	Lighting	Tools		
☐ Mirror ☑ N/A ☐ Magnifier ☐ CCTV	☐ Ambient ☑ Flashlight ☐ Droplight	☐ Scale ☐ Depth Gauge ☐ Level ☐ Micrometer ☐ Comparator ☑ N/A ☐ Caliper ☐ Weld Gauge ☐		

Examiner/Initial Sig.	Level
Clyde W. Kiehl	II
Harry M. Ackerman	II

Date (Month-Day-Year) 10/13/01

☐ WELDS AND BASE MATERIAL VT-1	SAT	*UN-SAT	N/A
Ground Blend Material	☐	☐	☑
Undercut	☐	☐	☑
Corrosion Build-up	☐	☐	☑
Gouges	☐	☐	☑
Evidence of Leakage	☐	☐	☑
Arc Strikes	☐	☐	☑
Cracks	☐	☐	☑
Other**	☐	☐	☑

* Provide details on unsat areas by use of supplemental data sheet.
** Provide details on other areas examined

☑ BOLTS, STUDS, AND WASHERS VT-1	SAT	*UN-SAT	N/A
Loose Members	☐	☐	☑
Cracks	☑	☐	☐
Corrosion	☑	☐	☐
Gouges	☑	☐	☐
Thread Damage	☐	☐	☑
Deformation	☑	☐	☐
Protective Coating	☐	☐	☑
Evidence of Leakage	☐	☐	☑
Other **	☐	☐	☑

Comments NONE

	ANII Review C G Wand	Date 10/16/01
Reviewed By Larry P. Lotter	Level III	Date 10-16-01

Revision 1.0

Farley Nuc[illegible]nt
Visual Examination Record VT-1

SHARED

FNP-0-ND[illegible] .21
Southern Nuclear Operating Company

Plant / Unit	Line Number/Examination Area/Weld No.	Drawing Number	Sheet Number
Farley / 1	ALA1-1300-W29 REACTOR VESSEL WASHERS	ALA1-1300	S01F1V074

Photos	Sketch	Resolution	Technique	
☐ Yes ☐ B/W ☑ No ☐ Color	☐ Yes ☑ No	☐ 1/32" Division (Scale) ☑ 1/32" Line (Gray Card)	☑ Direct ☐ Video ☐ Remote	WO / WA N/A Procedure No. FNP-0-NDE-100.21 Revision No. 1.0 / N/A

Equipment	Lighting	Tools		
☐ Mirror ☑ N/A ☐ Magnifier ☐ CCTV	☐ Ambient ☑ Flashlight ☐ Droplight	☐ Scale ☐ Depth Gauge ☐ Level ☐ Micrometer ☐ Comparator ☑ N/A ☐ Caliper ☐ Weld Gauge ☐		

Examiner/Initial Sig.	Level
Clyde W. Kiehl	II
Harry M. Ackerman	II

Date (Month-Day-Year) 10/13/01

☐ WELDS AND BASE MATERIAL VT-1	SAT	*UN-SAT	N/A
Ground Blend Material	☐	☐	☑
Undercut	☐	☐	☑
Corrosion Build-up	☐	☐	☑
Gouges	☐	☐	☑
Evidence of Leakage	☐	☐	☑
Arc Strikes	☐	☐	☑
Cracks	☐	☐	☑
Other**	☐	☐	☑

* Provide details on unsat areas by use of supplemental data sheet.
** Provide details on other areas examined

☑ BOLTS, STUDS, AND WASHERS VT-1	SAT	*UN-SAT	N/A
Loose Members	☐	☐	☑
Cracks	☑	☐	☐
Corrosion	☑	☐	☐
Gouges	☑	☐	☐
Thread Damage	☐	☐	☑
Deformation	☑	☐	☐
Protective Coating	☐	☐	☑
Evidence of Leakage	☐	☐	☑
Other **	☐	☐	☑

Comments NONE

	ANII Review C G Wamd	Date 10/16/01
Reviewed By Darryl L. Rotten	Level III	Date 10-16-01

Revision 1.0

Farley Nuc[illegible]t
Visual Examination Record VT-1

SHARED

FNP-0-ND[illegible] .21
Southern Nuclear Operating Company

Plant / Unit	Line Number/Examination Area/Weld No.	Drawing Number	Sheet Number
Farley / 1	ALA1-1300-W30 REACTOR VESSEL WASHERS	ALA1-1300	S01F1V075

Photos	Sketch	Resolution	Technique	
☐ Yes ☐ B/W ☑ No ☐ Color	☐ Yes ☑ No	☐ 1/32" Division (Scale) ☑ 1/32" Line (Gray Card)	☑ Direct ☐ Video ☐ Remote	WO / WA N/A Procedure No. FNP-0-NDE-100.21 Revision No. 1.0 / N/A

Equipment	Lighting	Tools			Examiner/Initial Sig.	Level
☐ Mirror ☑ N/A ☐ Magnifier ☐ CCTV	☐ Ambient ☑ Flashlight ☐ Droplight	☐ Scale ☐ Micrometer ☐ Caliper	☐ Depth Gauge ☐ Comparator ☐ Weld Gauge	☐ Level ☑ N/A ☐	Clyde W. Kiehl Clyde W Kiehl	II
					Examiner/Initial Sig. Harry Ackerman Harry M. Ackerman	II
					Date (Month-Day-Year) 10/13/01	

☐ WELDS AND BASE MATERIAL VT-1	SAT	*UN-SAT	N/A
Ground Blend Material	☐	☐	☑
Undercut	☐	☐	☑
Corrosion Build-up	☐	☐	☑
Gouges	☐	☐	☑
Evidence of Leakage	☐	☐	☑
Arc Strikes	☐	☐	☑
Cracks	☐	☐	☑
Other**	☐	☐	☑

* Provide details on unsat areas by use of supplemental data sheet.
** Provide details on other areas examined

☑ BOLTS, STUDS, AND WASHERS VT-1	SAT	*UN-SAT	N/A
Loose Members	☐	☐	☑
Cracks	☑	☐	☐
Corrosion	☑	☐	☐
Gouges	☑	☐	☐
Thread Damage	☐	☐	☑
Deformation	☑	☐	☐
Protective Coating	☐	☐	☑
Evidence of Leakage	☐	☐	☑
Other **	☐	☐	☑

Comments NONE

	ANII Review [illegible]	Date 10/16/01
Reviewed By Gary A. Lofties	Level III	Date 10-16-01

Revision 1.0

Farley Nuc[illegible]nt
Visual Examination Record VT-1

SHARED

FNP-0-NDE[illegible].21
Southern Nuclear Operating Company

Plant / Unit	Line Number/Examination Area/Weld No.	Drawing Number	Sheet Number
Farley / 1	ALA1-1300-W31 REACTOR VESSEL WASHERS	ALA1-1300	S01F1V076

Photos	Sketch	Resolution	Technique	
☐ Yes ☐ B/W ☑ No ☐ Color	☐ Yes ☑ No	☐ 1/32" Division (Scale) ☑ 1/32" Line (Gray Card)	☑ Direct ☐ Video ☐ Remote	WO / WA N/A Procedure No. FNP-0-NDE-100.21 Revision No. 1.0 / N/A

Equipment	Lighting	Tools			Examiner/Initial Sig.	Level
☐ Mirror ☑ N/A ☐ Magnifier ☐ CCTV	☐ Ambient ☑ Flashlight ☐ Droplight	☐ Scale ☐ Micrometer ☐ Caliper	☐ Depth Gauge ☐ Comparator ☐ Weld Gauge	☐ Level ☑ N/A ☐	Clyde W Kiehl Clyde W Kiehl	II
					Examiner/Initial Sig. Harry Ackerman Harry M. Ackerman	II
					Date (Month-Day-Year) 10/13/01	

☐ WELDS AND BASE MATERIAL VT-1	SAT	*UN-SAT	N/A
Ground Blend Material	☐	☐	☑
Undercut	☐	☐	☑
Corrosion Build-up	☐	☐	☑
Gouges	☐	☐	☑
Evidence of Leakage	☐	☐	☑
Arc Strikes	☐	☐	☑
Cracks	☐	☐	☑
Other**	☐	☐	☑

* Provide details on unsat areas by use of supplemental data sheet.
** Provide details on other areas examined

☑ BOLTS, STUDS, AND WASHERS VT-1	SAT	*UN-SAT	N/A
Loose Members	☐	☐	☑
Cracks	☑	☐	☐
Corrosion	☑	☐	☐
Gouges	☑	☐	☐
Thread Damage	☐	☐	☑
Deformation	☑	☐	☐
Protective Coating	☐	☐	☑
Evidence of Leakage	☐	☐	☑
Other **	☐	☐	☑

Comments NONE

	ANII Review [illegible]	Date 10/16/01
Reviewed By Larry A. Lotter	Level III	Date 10-16-01

Revision 1.0

SHARED

Plant / Unit	Line Number/Examination Area/Weld No.	Drawing Number	Sheet Number
Farley / 1	ALA1-1300-W32 REACTOR VESSEL WASHERS	ALA1-1300	S01F1V077

Photos	Sketch	Resolution	Technique	
☐ Yes ☐ B/W ☑ No ☐ Color	☐ Yes ☑ No	☐ 1/32" Division (Scale) ☑ 1/32" Line (Gray Card)	☑ Direct ☐ Video ☐ Remote	WO / WA N/A Procedure No. FNP-0-NDE-100.21 Revision No. 1.0 / N/A

Equipment	Lighting	Tools			Examiner/Initial Sig.	Level
☐ Mirror ☑ N/A ☐ Magnifier ☐ CCTV	☐ Ambient ☑ Flashlight ☐ Droplight	☐ Scale ☐ Micrometer ☐ Caliper	☐ Depth Gauge ☐ Comparator ☐ Weld Gauge	☐ Level ☑ N/A ☐	Clyde W. Kiehl Clyde W Kiehl Examiner/Initial Harry Ackerman Sig. Harry M. Ackerman Date (Month-Day-Year) 10/13/01	II Level II

☐ WELDS AND BASE MATERIAL VT-1	SAT	*UN-SAT	N/A
Ground Blend Material	☐	☐	☑
Undercut	☐	☐	☑
Corrosion Build-up	☐	☐	☑
Gouges	☐	☐	☑
Evidence of Leakage	☐	☐	☑
Arc Strikes	☐	☐	☑
Cracks	☐	☐	☑
Other**	☐	☐	☑

* Provide details on unsat areas by use of supplemental data sheet.
** Provide details on other areas examined

☑ BOLTS, STUDS, AND WASHERS VT-1	SAT	*UN-SAT	N/A
Loose Members	☐	☐	☑
Cracks	☑	☐	☐
Corrosion	☑	☐	☐
Gouges	☑	☐	☐
Thread Damage	☐	☐	☑
Deformation	☑	☐	☐
Protective Coating	☐	☐	☑
Evidence of Leakage	☐	☐	☑
Other **	☐	☐	☑

Comments NONE

	ANII Review C G Wood	Date 10/16/01
Reviewed By Larry P. Rotters	Level III	Date 10-16-01

Farley Nuc... nt
Visual Examination Record VT-1

SHARED

FNP-0-NDE .21
Southern Nuclear Operating Company

Plant / Unit	Line Number/Examination Area/Weld No.	Drawing Number	Sheet Number
Farley / 1	ALA1-1300-W33 REACTOR VESSEL WASHERS	ALA1-1300	S01F1V078

Photos	Sketch	Resolution	Technique	
☐ Yes ☐ B/W ☑ No ☐ Color	☐ Yes ☑ No	☐ 1/32" Division (Scale) ☑ 1/32" Line (Gray Card)	☑ Direct ☐ Video ☐ Remote	WO / WA N/A Procedure No. FNP-0-NDE-100.21 Revision No. 1.0 / N/A

Equipment	Lighting	Tools			Examiner/Initial Sig.	Level
☐ Mirror ☑ N/A ☐ Magnifier ☐ CCTV	☐ Ambient ☑ Flashlight ☐ Droplight	☐ Scale ☐ Micrometer ☐ Caliper	☐ Depth Gauge ☐ Comparator ☐ Weld Gauge	☐ Level ☑ N/A ☐	Clyde W. Kiehl Clyde W Kiehl	II
					Examiner/Initial Sig. Harry Ackerman Harry M. Ackerman	II
					Date (Month-Day-Year) 10/13/01	

☐ WELDS AND BASE MATERIAL VT-1	SAT	*UN-SAT	N/A
Ground Blend Material	☐	☐	☑
Undercut	☐	☐	☑
Corrosion Build-up	☐	☐	☑
Gouges	☐	☐	☑
Evidence of Leakage	☐	☐	☑
Arc Strikes	☐	☐	☑
Cracks	☐	☐	☑
Other**	☐	☐	☑

* Provide details on unsat areas by use of supplemental data sheet.
** Provide details on other areas examined

☑ BOLTS, STUDS, AND WASHERS VT-1	SAT	*UN-SAT	N/A
Loose Members	☐	☐	☑
Cracks	☑	☐	☐
Corrosion	☑	☐	☐
Gouges	☑	☐	☐
Thread Damage	☐	☐	☑
Deformation	☑	☐	☐
Protective Coating	☐	☐	☑
Evidence of Leakage	☐	☐	☑
Other **	☐	☐	☑

Comments NONE

	ANII Review CG Worrel	Date 10/16/01
Reviewed By Danny A. Loftus	Level III	Date 10-16-01

Revision 1.0

Farley Nuc... nt
Visual Examination Record VT-1

SHARED

FNP-0-NDE .21
Southern Nuclear Operating Company

Plant / Unit	Line Number/Examination Area/Weld No.	Drawing Number	Sheet Number
Farley / 1	ALA1-1300-W34 REACTOR VESSEL WASHERS	ALA1-1300	S01F1V079

Photos	Sketch	Resolution	Technique	
☐ Yes ☐ B/W ☑ No ☐ Color	☐ Yes ☑ No	☐ 1/32" Division (Scale) ☑ 1/32" Line (Gray Card)	☑ Direct ☐ Video ☐ Remote	WO / WA N/A Procedure No. FNP-0-NDE-100.21 Revision No. 1.0 / N/A

Equipment	Lighting	Tools			Examiner/Initial Sig.	Level
☐ Mirror ☑ N/A ☐ Magnifier ☐ CCTV	☐ Ambient ☑ Flashlight ☐ Droplight	☐ Scale ☐ Micrometer ☐ Caliper	☐ Depth Gauge ☐ Comparator ☐ Weld Gauge	☐ Level ☑ N/A ☐	Clyde W. Kiehl Clyde W Kiehl	II
					Examiner/Initial Sig. Harry Ackerman Harry M. Ackerman	II
					Date (Month-Day-Year) 10/13/01	

☐ WELDS AND BASE MATERIAL VT-1	SAT	*UN-SAT	N/A
Ground Blend Material	☐	☐	☑
Undercut	☐	☐	☑
Corrosion Build-up	☐	☐	☑
Gouges	☐	☐	☑
Evidence of Leakage	☐	☐	☑
Arc Strikes	☐	☐	☑
Cracks	☐	☐	☑
Other**	☐	☐	☑

* Provide details on unsat areas by use of supplemental data sheet.
** Provide details on other areas examined

☑ BOLTS, STUDS, AND WASHERS VT-1	SAT	*UN-SAT	N/A
Loose Members	☐	☐	☑
Cracks	☑	☐	☐
Corrosion	☑	☐	☐
Gouges	☑	☐	☐
Thread Damage	☐	☐	☑
Deformation	☑	☐	☐
Protective Coating	☐	☐	☑
Evidence of Leakage	☐	☐	☑
Other **	☐	☐	☑

Comments NONE

	ANII Review CGWard	Date 10/16/01
Reviewed By Larry P. Loftus	Level III	Date 10-16-01

Revision 1.0

Plant / Unit	Line Number/Examination Area/Weld No.	Drawing Number	Sheet Number
Farley / 1	ALA1-1300-W35 REACTOR VESSEL WASHERS	ALA1-1300	S01F1V080

Photos	Sketch	Resolution	Technique	
☐ Yes ☐ B/W ☑ No ☐ Color	☐ Yes ☑ No	☐ 1/32" Division (Scale) ☑ 1/32" Line (Gray Card)	☑ Direct ☐ Video ☐ Remote	**WO / WA** N/A **Procedure No.** FNP-0-NDE-100.21 **Revision No.** 1.0 / N/A

Equipment	Lighting	Tools			Examiner/Initial Sig.	Level
☐ Mirror ☑ N/A ☐ Magnifier ☐ CCTV	☐ Ambient ☑ Flashlight ☐ Droplight	☐ Scale ☐ Micrometer ☐ Caliper	☐ Depth Gauge ☐ Comparator ☐ Weld Gauge	☐ Level ☑ N/A ☐	Clyde W. Kiehl Clyde W Kiehl	II
					Examiner/Initial Sig. Harry Ackerman Harry M. Ackerman	II
					Date (Month-Day-Year) 10/13/01	

☐ WELDS AND BASE MATERIAL VT-1	SAT	*UN-SAT	N/A
Ground Blend Material	☐	☐	☑
Undercut	☐	☐	☑
Corrosion Build-up	☐	☐	☑
Gouges	☐	☐	☑
Evidence of Leakage	☐	☐	☑
Arc Strikes	☐	☐	☑
Cracks	☐	☐	☑
Other**	☐	☐	☑

* Provide details on unsat areas by use of supplemental data sheet.
** Provide details on other areas examined

☑ BOLTS, STUDS, AND WASHERS VT-1	SAT	*UN-SAT	N/A
Loose Members	☐	☐	☑
Cracks	☑	☐	☐
Corrosion	☑	☐	☐
Gouges	☑	☐	☐
Thread Damage	☐	☐	☑
Deformation	☑	☐	☐
Protective Coating	☐	☐	☑
Evidence of Leakage	☐	☐	☑
Other **	☐	☐	☑

Comments NONE

	ANII Review	**Date** 10/16/01
Reviewed By	**Level** III	**Date** 10-16-01

SHARED

Plant / Unit	Line Number/Examination Area/Weld No.	Drawing Number	Sheet Number
Farley / 1	ALA1-1300-W36 REACTOR VESSEL WASHERS	ALA1-1300	S01F1V081

Photos	Sketch	Resolution	Technique	
☐ Yes ☐ B/W ☑ No ☐ Color	☐ Yes ☑ No	☐ 1/32" Division (Scale) ☑ 1/32" Line (Gray Card)	☑ Direct ☐ Video ☐ Remote	WO / WA N/A Procedure No. FNP-0-NDE-100.21 Revision No. 1.0 / N/A

Equipment	Lighting	Tools			Examiner/Initial Sig.	Level
☐ Mirror ☑ N/A ☐ Magnifier ☐ CCTV	☐ Ambient ☑ Flashlight ☐ Droplight	☐ Scale ☐ Micrometer ☐ Caliper	☐ Depth Gauge ☐ Comparator ☐ Weld Gauge	☐ Level ☑ N/A ☐	Clyde W. Kiehl Clyde W Kiehl	II
					Examiner/Initial Sig. Harry Ackerman Harry M. Ackerman	II
					Date (Month-Day-Year) 10/13/01	

☐ WELDS AND BASE MATERIAL VT-1	SAT	*UN-SAT	N/A
Ground Blend Material	☐	☐	☑
Undercut	☐	☐	☑
Corrosion Build-up	☐	☐	☑
Gouges	☐	☐	☑
Evidence of Leakage	☐	☐	☑
Arc Strikes	☐	☐	☑
Cracks	☐	☐	☑
Other**	☐	☐	☑

* Provide details on unsat areas by use of supplemental data sheet.
** Provide details on other areas examined

☑ BOLTS, STUDS, AND WASHERS VT-1	SAT	*UN-SAT	N/A
Loose Members	☐	☐	☑
Cracks	☑	☐	☐
Corrosion	☑	☐	☐
Gouges	☑	☐	☐
Thread Damage	☐	☐	☑
Deformation	☑	☐	☐
Protective Coating	☐	☐	☑
Evidence of Leakage	☐	☐	☑
Other **	☐	☐	☑

Comments NONE

	ANII Review	Date
	CGWard	10/16/01
Reviewed By Darryl A. Hopkins	Level III	Date 10-16-01

Farley Nuc[illegible]nt
Visual Examination Record VT-1

SHARED

FNP-0-NDE .21
Southern Nuclear Operating Company

Plant / Unit	Line Number/Examination Area/Weld No.	Drawing Number	Sheet Number
Farley / 1	ALA1-1300-W37 REACTOR VESSEL WASHERS	ALA1-1300	S01F1V082

Photos	Sketch	Resolution	Technique	
☐ Yes ☐ B/W ☑ No ☐ Color	☐ Yes ☑ No	☐ 1/32" Division (Scale) ☑ 1/32" Line (Gray Card)	☑ Direct ☐ Video ☐ Remote	WO / WA N/A Procedure No. FNP-0-NDE-100.21 Revision No. 1.0 / N/A

Equipment	Lighting	Tools			Examiner/Initial Sig.	Level
☐ Mirror ☑ N/A ☐ Magnifier ☐ CCTV	☐ Ambient ☑ Flashlight ☐ Droplight	☐ Scale ☐ Micrometer ☐ Caliper	☐ Depth Gauge ☐ Comparator ☐ Weld Gauge	☐ Level ☑ N/A ☐	Clyde W. Kiehl Clyde W Kiehl	II
					Examiner/Initial Sig. Harry Ackerman Harry M. Ackerman	II
					Date (Month-Day-Year) 10/13/01	

☐ WELDS AND BASE MATERIAL VT-1	SAT	*UN-SAT	N/A
Ground Blend Material	☐	☐	☑
Undercut	☐	☐	☑
Corrosion Build-up	☐	☐	☑
Gouges	☐	☐	☑
Evidence of Leakage	☐	☐	☑
Arc Strikes	☐	☐	☑
Cracks	☐	☐	☑
Other**	☐	☐	☑

* Provide details on unsat areas by use of supplemental data sheet.
** Provide details on other areas examined

☑ BOLTS, STUDS, AND WASHERS VT-1	SAT	*UN-SAT	N/A
Loose Members	☐	☐	☑
Cracks	☑	☐	☐
Corrosion	☑	☐	☐
Gouges	☑	☐	☐
Thread Damage	☐	☐	☑
Deformation	☑	☐	☐
Protective Coating	☐	☐	☑
Evidence of Leakage	☐	☐	☑
Other **	☐	☐	☑

Comments NONE

	ANII Review	Date
	[illegible]	10/16/01
Reviewed By Harry P. Loftus	Level III	Date 10-16-01

Revision 1.0

Farley Nuc[illegible]nt
Visual Examination Record VT-1

SHARED

FNP-0-NDE .21
Southern Nuclear Operating Company

Plant / Unit	Line Number/Examination Area/Weld No.	Drawing Number	Sheet Number
Farley / 1	ALA1-1300-W38 REACTOR VESSEL WASHERS	ALA1-1300	S01F1V083

Photos	Sketch	Resolution	Technique	
☐ Yes ☐ B/W ☑ No ☐ Color	☐ Yes ☑ No	☐ 1/32" Division (Scale) ☑ 1/32" Line (Gray Card)	☑ Direct ☐ Video ☐ Remote	**WO / WA** N/A **Procedure No.** FNP-0-NDE-100.21 **Revision No.** 1.0 / N/A

Equipment	Lighting	Tools			Examiner/Initial Sig.	Level
☐ Mirror ☑ N/A ☐ Magnifier ☐ CCTV	☐ Ambient ☑ Flashlight ☐ Droplight	☐ Scale ☐ Micrometer ☐ Caliper	☐ Depth Gauge ☐ Comparator ☐ Weld Gauge	☐ Level ☑ N/A ☐	Clyde W. Kiehl Clyde W Kiehl	II
					Examiner/Initial Sig. Harry Ackerman Harry M. Ackerman	II
					Date (Month-Day-Year) 10/13/01	

☐ WELDS AND BASE MATERIAL VT-1	SAT	*UN-SAT	N/A
Ground Blend Material	☐	☐	☑
Undercut	☐	☐	☑
Corrosion Build-up	☐	☐	☑
Gouges	☐	☐	☑
Evidence of Leakage	☐	☐	☑
Arc Strikes	☐	☐	☑
Cracks	☐	☐	☑
Other**	☐	☐	☑

* Provide details on unsat areas by use of supplemental data sheet.
** Provide details on other areas examined

☑ BOLTS, STUDS, AND WASHERS VT-1	SAT	*UN-SAT	N/A
Loose Members	☐	☐	☑
Cracks	☑	☐	☐
Corrosion	☑	☐	☐
Gouges	☑	☐	☐
Thread Damage	☐	☐	☑
Deformation	☑	☐	☐
Protective Coating	☐	☐	☑
Evidence of Leakage	☐	☐	☑
Other **	☐	☐	☑

Comments NONE

	ANII Review [illegible]	**Date** 10/16/01
Reviewed By Gary A. Lothes	**Level** III	**Date** 10-16-01

Revision 1.0

1.2

EXAMINATION SUMMARY
FOR UNIT 1
INTERVAL 3 PERIOD 2 OUTAGE 1

DRAWING ALA1-2100
PRESSURIZER

ITEM NO	VOLUMERIC			SURFACE			VISUAL			REMARKS
	NI	NRI	RI	NI	NRI	RI	NI	NRI	RI	
11		X		X						
11IR		X								
12		X		X						
12IR		X								
13		X		X						
13IR		X								

ALA1-2100A

PRESSURIZER NOZZLE TO VESSEL WELDS

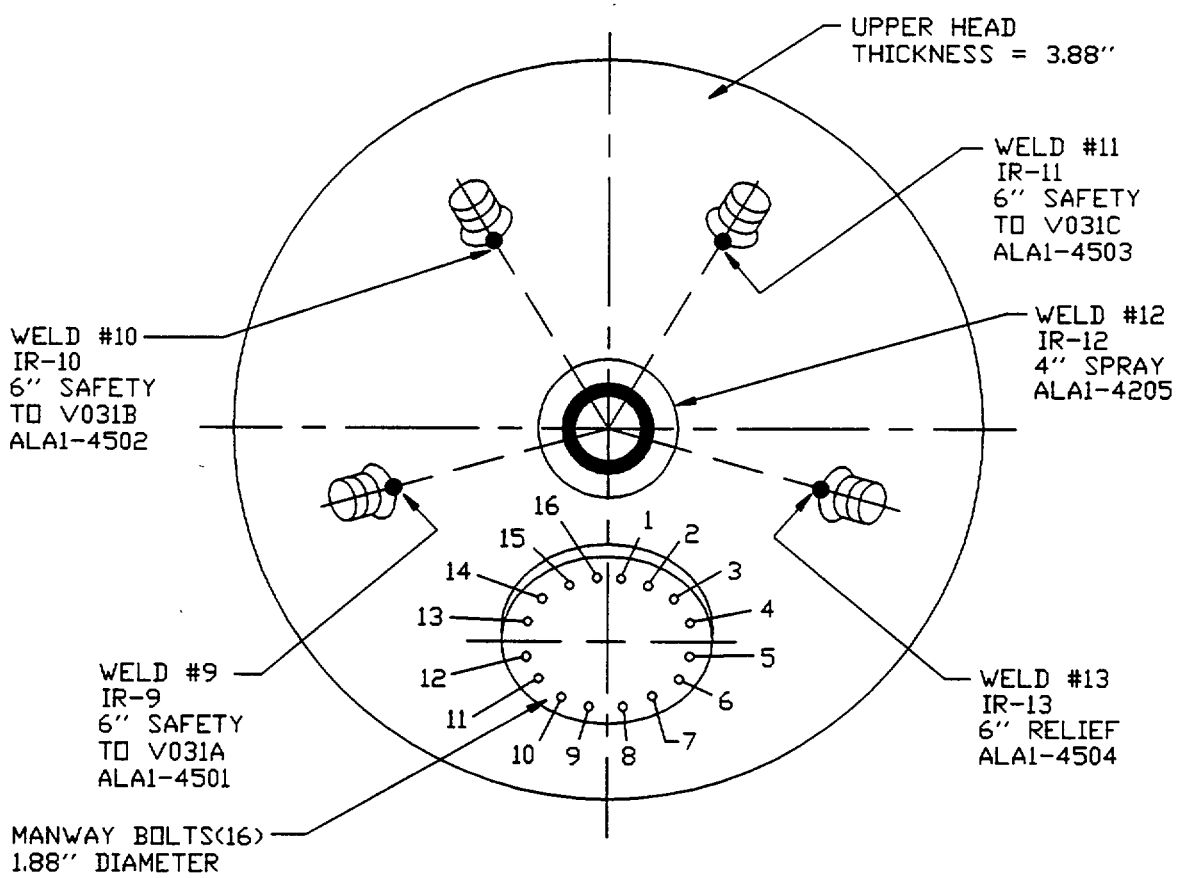

WELD #	FNP FIG.	CAL. BLOCK
9	008	APR-7
IR-9	008	APR-38
10	008	APR-7
IR-10	008	APR-38
11	008	APR-7
IR-11	008	APR-38
12	008	APR-7
IR-12	008	APR-38
13	008	APR-7
IR-13	008	APR-38
14	008	APR-7
IR-14	008	APR-39

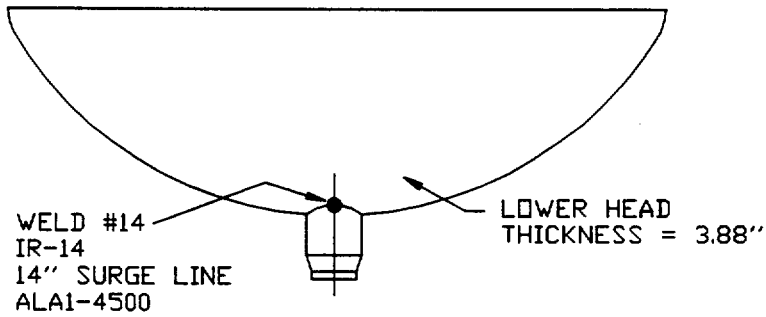

NOTE:
6 NOZZLE TO VESSEL WELDS
16 MANWAY BOLTS

REV.	DATE	BY	CHK'D	DESCRIPTION	APPR.1	APPR.2	APPR.3	APPR.4
1	3-26-98	RAW	JAR	REVISED PER REA 96-1295, REV. 0	LDT	DLG DEV		
0	6-30-92	SDH	JAR	ISSUED PER PCN S-92-1-8162.	CAB	CCM for WRH	AH	DML

CAD AUTOCAD ALA2100A RAW-02

Southern Company Services, Inc. for PRESSURIZER

ALABAMA POWER COMPANY
JOSEPH M. FARLEY NUCLEAR PLANT
UNIT 1

SCS DRAWING NUMBER	SHEET	REV.
A-351192	12	1

SHARED

Farley Nuclear Plant
Ultrasonic Calibration and Examination Record

FNP-0-NDE-100.34
Southern Nuclear Operating Company

Unit	Sketch/Component Number	Date	Sheet No.
1	ALA1-2100-11	10/14/01	S01F1U067 Page 1 of 1

Procedure/Rev./TCN	Couplant/Batch No.	ThermometerSN/Cal Due Date	Linearity Sheet No.
FNP-0-NDE-100.34 / 6.0 / N/A	Ultragel II / 01125	43619 2/25/02	S01F1L001

Instrument

Instrument	Staveley / SONIC 136	
Serial No.	136-911K	
	Axial dB	Circ dB
Reference	32.6	32.6
Scanning	44.6	44.6
Reject	OFF	
Frequency	2.25	
Mode	P/E	
Damping	500 OHMS	

Search Unit

Transducer Mfg.	KBA
Serial Number	C26672
Model No.	N/A
Size / No.	1.0" Shape Round
Frequency/Mode	2.25 / Long
"A" Dimension	N/A
Nom Angle	0 °
Meas Angle	N/A °
Cable Type / No. Conn.	RG58 / 1
Cable Length	20'

Calibration Block

Cal. Blk. No.	APR-7
Thickness	3.5
Cal. Temp	69 °F
Cal. In	12:40
Cal. Chk.	1405
Cal. Out	17:40
Ref. Blk. No.	796478
Reflector/dB	BW / 22
Amp/Sweep	80 % / 1.9

Axial Scan Calibration				Circ Scan Calibration			
Cal. Refl.	Signal Amp.	Sweep Div.	Wmax	Cal. Refl.	Signal Amp.	Sweep Div.	Wmax
1/4T	65	1.5	N/A	1/4T	65	1.5	N/A
1/2T	65	3.0	N/A	1/2T	65	3.0	N/A
3/4T	80	4.5	N/A	3/4T	80	4.5	N/A
1T	100+	6.0	N/A	1T	100+	6.0	N/A

Calibration Remarks:

2 Scan Performed from Nozzle Side; 5 Scan Performed from Vessel Side; Reference Relief Request 6 for coverage caculations.

Comp Temp.	Configuration -	Wo Loc.	Lo Loc.
86 °F	SAFETY NOZZLE TO PZR TOP HEAD	C/L OF WELD	*

Scan Dir.	Results NI	Results NRI	Results RI	Ind No.	% DAC	Length L1	Length Lmax	Length L2	Reference Measurement W1	Reference Measurement Wmax	Reference Measurement W2	Sweep Position S1	Sweep Position Smax	Sweep Position S2	Thickness 1"<--	Thickness C/L	Thickness -->1"	Notes:
5	○	◉	○															
2	○	◉	○															

Examination/Limitation Remarks: *OUTSIDE RADIUS OF ABOVE ELBOW
Relief Request -6 Gal 10-17-01

Total Length of Weld	Crown Width	Total Length of Weld Examined	Extent of Perpendicular Scans (W)	Extent of Parallel Scans (L)
360°	FLUSH	5 (L) NL 2 (L) NL 7 and 8 (W) NA	5- From NL to BOSS 2- From BOSS to NL	From (5) NA to (2) NA

Primary Examiner	Level	Initials	Assistant Examiner	Level	Initials	Non-Technical Review	Date
James F. Halley	III	JFH	N/ A	N/A		Lynda Duke	10-17-01

SNC NDE Level II/III Review		Date	Percentage of Code Coverage	ANII Review	Date
Larry A. Lefler	III	10-17-01	75% composite	E G Ward	10/18/01

Revision 6.0

SHARED

Farley Nuclear Plant
Ultrasonic Calibration and Examination Record

FNP-0-NDE-100.34
Southern Nuclear Operating Company

Unit	Sketch/Component Number	Date	Sheet No.
1	ALA1-2100-11	10/14/01	S01F1U068 Page 1 of 1

Procedure/Rev./TCN	Couplant/Batch No.	ThermometerSN/Cal Due Date	Linearity Sheet No.
FNP-0-NDE-100.34 / 6.0 / N/A	Ultragel II / 01125	43619 2/25/02	S01F1L001

Instrument

Instrument	Staveley / SONIC 136	
Serial No.	136-911K	
	Axial dB	Circ dB
Reference	38.4	38.4
Scanning	50.4	50.4
Reject	OFF	
Frequency	2.25	
Mode	P/E	
Damping	500 OHMS	

Search Unit

Transducer Mfg.	KBA
Serial Number	00B955
Model No.	113-292-600
Size / No.	.5" x 1.0" Shape Round
Frequency/Mode	2.25 / Shear
"A" Dimension	.70"
Nom Angle	45°
Meas Angle	45°
Cable Type / No. Conn.	RG58 / 1
Cable Length	20'

Calibration Block

Cal. Blk. No.	APR-7
Thickness	3.5
Cal. Temp	69 °F
Cal. In	12:35
Cal. Chk.	1405
Cal. Out	17:43
Ref. Blk. No.	796478
Reflector/dB	HOLE/38.6
Amp/Sweep	70 % / 2.1

Axial Scan Calibration				Circ Scan Calibration			
Cal. Refl.	Signal Amp.	Sweep Div.	Wmax	Cal. Refl.	Signal Amp.	Sweep Div.	Wmax
1/4T	80	1.5	.90	1/4T	80	1.5	.90
1/2T	55	2.9	1.75	1/2T	55	2.9	1.75
3/4T	35	4.5	2.55	3/4T	35	4.5	2.55
1T	12	6.2	3.6	1T	12	6.2	3.6

Calibration Remarks:

2 Scan Performed from Nozzle Side; 5 Scan Performed from Vessel Side; Reference Relief Request 6 for coverage caculations.

Comp Temp.	Configuration -	Wo Loc.	Lo Loc.
86 °F	SAFETY NOZZLE TO PZR TOP HEAD	C/L OF WELD	*

Scan Dir.	Results NI	Results NRI	Results RI	Ind No.	% DAC	Length L1	Length Lmax	Length L2	Reference Measurement W1	Reference Measurement Wmax	Reference Measurement W2	Sweep Position S1	Sweep Position Smax	Sweep Position S2	Thickness 1"<--	Thickness C/L	Thickness -->1"	Notes:
8	○	◉	○															
7	○	◉	○															
5	○	◉	○															
2	○	◉	○															

Examination/Limitation Remarks: *OUTSIDE RADIUS OF ABOVE ELBOW
Relief Request -6 [illegible] 10-17-01

Total Length of Weld	Crown Width	Total Length of Weld Examined	Extent of Perpendicular Scans (W)	Extent of Parallel Scans (L)
360°	FLUSH	5 (L) NL 2 (L) NL 7 and 8 (W) NL	5- From NL to BOSS 2- From BOSS to NL	From (5) NL to (2) NL

Primary Examiner	Level	Initials	Assistant Examiner	Level	Initials	Non-Technical Review	Date
James F. Halley	III	JFH	N/A	N/A		Lynda Duke	10-17-01

SNC NDE Level II/III Review		Date	Percentage of Code Coverage	ANII Review	Date
Danny A. Rollins	III	10-17-01	75% composite	[illegible]	10/18/01

Revision 6.0

SHARED

Farley Nuclear Plant
Ultrasonic Calibration and Examination Record

FNP-0-NDE-100.34
Southern Nuclear Operating Company

Unit	Sketch/Component Number	Date	Sheet No.
1	ALA1-2100-11	10/14/01	S01F1U069 Page 1 of 1

Procedure/Rev./TCN	Couplant/Batch No.	ThermometerSN/Cal Due Date	Linearity Sheet No.
FNP-0-NDE-100.34 / 6.0 / N/A	Ultragel II / 01125	43619 2/25/02	S01F1L001

Instrument

Instrument	Staveley / SONIC 136	
Serial No.	136-911K	
	Axial dB	Circ dB
Reference	59.4	59.4
Scanning	71.4	71.4
Reject	OFF	
Frequency	2.25	
Mode	P/E	
Damping	500 ohms	

Search Unit

Transducer Mfg.	KBA
Serial Number	009XBK
Model No.	113-292-600
Size / No.	.5" x 1.0" Shape Rect.
Frequency/Mode	2.25 / Shear
"A" Dimension	.70"
Nom Angle	60 °
Meas Angle	62 °
Cable Type / No. Conn.	RG58 / 1
Cable Length	20'

Calibration Block

Cal. Blk. No.	APR-7
Thickness	3.5
Cal. Temp	69 °F
Cal. In	12:30
Cal. Chk.	1435
Cal. Out	17:46
Ref. Blk. No.	796478
Reflector/dB	HOLE/59.4
Amp/Sweep	20 % / 1.5

Axial Scan Calibration				Circ Scan Calibration			
Cal. Refl.	Signal Amp.	Sweep Div.	Wmax	Cal. Refl.	Signal Amp.	Sweep Div.	Wmax
1/4T	80	1.5	1.6	1/4T	80	1.5	1.6
1/2T	50	3.0	3.4	1/2T	50	3.0	3.4
3/4T	35	4.5	4.9	3/4T	35	4.5	4.9
1T	10	6.2	6.6	1T	10	6.2	6.6

Calibration Remarks:

2 Scan Performed from Nozzle Side; 5 Scan Performed from Vessel Side; Reference Relief Request 6 for coverage caculations.

Comp Temp.	Configuration -	Wo Loc.	Lo Loc.
86 °F	SAFETY NOZZLE TO PZR TOP HEAD	C/L OF WELD	*

Scan Dir.	Results NI	Results NRI	Results RI	Ind No.	% DAC	Length L1	Length Lmax	Length L2	Reference Measurement W1	Reference Measurement Wmax	Reference Measurement W2	Sweep Position S1	Sweep Position Smax	Sweep Position S2	Thickness 1"<--	Thickness C/L	Thickness -->1"	Notes:
8	○	◉	○															
7	○	◉	○															
5	○	◉	○															
2	○	◉	○															

Examination/Limitation Remarks: *OUTSIDE RADIUS OF ABOVE ELBOW
Relief Request -6 Ad 10-17-01

Total Length of Weld	Crown Width	Total Length of Weld Examined	Extent of Perpendicular Scans (W)	Extent of Parallel Scans (L)
360°	FLUSH	5 (L) NL 2 (L) NL 7 and 8 (W) NL	5- From NL to BOSS 2- From NL to NL	From (5) NL to (2) NL

Primary Examiner	Level	Initials	Assistant Examiner	Level	Initials	Non-Technical Review	Date
James F. Halley	III	JFH	N/A	N/A		Lynda Duke	10-17-01

SNC NDE Level II/III Review		Date	Percentage of Code Coverage	ANII Review	Date
Darryl A. Loftus	II	10-17-01	75% composite	C G Wood	10/18/01

Revision 6.0

SHARED

Farley Nuclear Plant
Ultrasonic Calibration and Examination Record

FNP-0-NDE-100.34
Southern Nuclear Operating Company

Unit	Sketch/Component Number	Date	Sheet No.
1	ALA1-2100-11	10/14/01	S01F1U070 Page 1 of 1

Procedure/Rev./TCN	Couplant/Batch No.	ThermometerSN/Cal Due Date	Linearity Sheet No.
FNP-0-NDE-100.34 / 6.0 / N/A	Ultragel II / 01125	43619 2/25/02	S01F1L001

Instrument

	Axial dB	Circ dB
Instrument	Staveley / SONIC 136	
Serial No.	136-911K	
Reference	56.6	56.6
Scanning	68.6	68.6
Reject	OFF	
Frequency	2.25	
Mode	P/E	
Damping	500 OHMS	

Search Unit

Transducer Mfg.	KBA
Serial Number	009XBL
Model No.	113-292-600
Size / No.	.5" x 1.0" Shape Rect
Frequency/Mode	2.25 / Shear
"A" Dimension	.90"
Nom Angle	70 °
Meas Angle	70 °
Cable Type / No. Conn.	RG58 / 1
Cable Length	20'

Calibration Block

Cal. Blk. No.	APR-7
Thickness	3.5
Cal. Temp	69 °F
Cal. In	12:20
Cal. Chk.	1455
Cal. Out	17:50
Ref. Blk. No.	796478
Reflector/dB	HOLE/48.4
Amp/Sweep	80 % / 3.7

Axial Scan Calibration				Circ Scan Calibration			
Cal. Refl.	Signal Amp.	Sweep Div.	Wmax	Cal. Refl.	Signal Amp.	Sweep Div.	Wmax
1/4T	80	4.0	2.5	1/4T	80	4.0	2.5
1/2T	35	8.0	4.5	1/2T	35	8.0	4.5

Calibration Remarks:

2 Scan Performed from Nozzle Side; 5 Scan Performed from Vessel Side; Reference Relief Request 6 for coverage caculations.

Comp Temp.	Configuration -	Wo Loc.	Lo Loc.
86 °F	SAFETY NOZZLE TO PZR TOP HEAD	WELD C/L	*

Scan Dir.	Results NI	Results NRI	Results RI	Ind No.	% DAC	Length L1	Length Lmax	Length L2	Reference Measurement W1	Reference Measurement Wmax	Reference Measurement W2	Sweep Position S1	Sweep Position Smax	Sweep Position S2	Thickness 1"<--	Thickness C/L	Thickness -->1"	Notes:
8	○	◉	○															
7	○	◉	○															
5	○	◉	○															
2	○	◉	○															

Examination/Limitation Remarks: *OUTSIDE RADIUS OF ABOVE ELBOW
Relief Request 6 Sal 10-17-01

Total Length of Weld	Crown Width	Total Length of Weld Examined	Extent of Perpendicular Scans (W)	Extent of Parallel Scans (L)
360°	FLUSH	5 (L) NL 2 (L) NL 7 and 8 (W) NL	5- From NL to BOSS 2- From BOSS to NL	From (5) NL to (2) NL

Primary Examiner	Level	Initials	Assistant Examiner	Level	Initials	Non-Technical Review	Date
James F. Halley	III	JFH	N/ A	N/A		Lynda Duke	10-17-01

SNC NDE Level II/III Review		Date	Percentage of Code Coverage	ANII Review	Date
Gary A. Lofton	III	10-17-01	75% composite	CG Ward	10/18/01

Revision 6.0

Farley Nuclear Plant
Magnetic Particle Examination Record

SHARED

FNP-0-NDE-100.11
MT-F-FORM 002
Southern Nuclear Operating Company

Unit	Weld Number	Procedure/Rev./TCN	Sheet No.
1	ALA1-2100-11	FNP-0-NDE-100.11 / 4.0 / N/A	S01F1M001 Page / of /

Thermometer

Mfg./Ser. No. PTC / 43619
Cal. Due Date 02/25/02

Surface Temp. 86 ° F

Magnetizing Yoke

Mfg.: Parker
Power AC
Serial No.: 2827
Pole Spacing: 7.5"
Field Indicator S/N: N/A
Field Indicator Acceptable [Y/N] N/A

MT Materials

Mfg.: Magnaflux
Batch Number: 95H062
Color: Red
Type: No. 8A

Component Configuration
SAFETY NOZZLE TO PZR TOP HEAD

% of Length Coverage 100%
% of Area Coverage 100%

Date 10/14/01

Ind. No.	Results	Indication Desc. / Exam Limitations / etc.	Remarks
n/a	NI	N/A	NONE

Remarks: Supplemental Surface Exam.

Primary Examiner	ASNT Level	Initials	Assistant Examiner	ASNT Level	Initials	Non-Technical Review	Date
Harry Ackerman	II	HWA	John W. Bell	II	JWB	Lynda Duke	10-16-01

SNC NDE Level II/III Review		Date	Percentage of Code Coverage	ANII Review	Date
Gary A. Loftus	III	10-16-01	100	CGWard	10/17/01

Revision 4.

SHARED

Farley Nuclear Plant
Ultrasonic Calibration and Examination Record

FNP-0-NDE-100.38
Southern Nuclear Operating Company

Unit	Sketch/Component Number	Date	Sheet No.
1	ALA1-2100-11IR	10/13/01	S01F1U053 Page 1 of 1

Procedure/Rev./TCN	Couplant/Batch No.	ThermometerSN/Cal Due Date	Linearity Sheet No.
FNP-0-NDE-100.38 / 2.0 / N/A	Ultragel II / 01125	43619 2/25/02	S01F1L002

Instrument

	Axial dB	Circ dB
Instrument	Staveley / SONIC 136	
Serial No.	136-911K	
Reference	N/A	66.6
Scanning	N/A	72.6
Reject	OFF	
Frequency	2.25	
Mode	P/E	
Damping	500 OHMS	

Search Unit

Transducer Mfg.	KBA
Serial Number	007RMJ
Model No.	113-242-591
Size / No.	.50 Shape Round
Frequency/Mode	2.25 / Shear
"A" Dimension	.35"
Nom Angle	20°
Meas Angle	20°
Cable Type / No. Conn.	RG174 / 0
Cable Length	12'

Calibration Block

Cal. Blk. No.	ALA-38
Thickness	6.01
Cal. Temp	75 °F
Cal. In	12:00
Cal. Chk.	13:10
Cal. Out	15:30
Ref. Blk. No.	796478
Reflector/dB	HOLE / 68
Amp/Sweep	100 % / 1.5

Axial Scan Calibration				Circ Scan Calibration			
Cal. Refl.	Signal Amp.	Sweep Div.	Wmax	Cal. Refl.	Signal Amp.	Sweep Div.	Wmax
A NOTCH	80%	3.0	2.7"	N/A			
B NOTCH	60%	5.0	3.4"	N/A			
C NOTCH	50%	7.0	4.0"	N/A			

Calibration Remarks:
w Max taken from top clad edge of block

Comp Temp.	Configuration -	Wo Loc.	Lo Loc.
86 °F	PZR NOZZLE INNER RADIUS	C/L of Radius	*

Scan Dir.	Results NI	Results NRI	Results RI	Ind No.	% DAC	Length L1	Length Lmax	Length L2	Reference Measurement W1	Reference Measurement Wmax	Reference Measurement W2	Sweep Position S1	Sweep Position Smax	Sweep Position S2	Thickness 1"<--	Thickness C/L	Thickness -->1"	Notes:
8	○	◉	○															
7	○	◉	○															

Examination/Limitation Remarks: *OUTSIDE RADIUS OF ABOVE ELBOW

Total Length of Weld	Crown Width	Total Length of Weld Examined	Extent of Perpendicular Scans (W)	Extent of Parallel Scans (L)
NA	NA	5 (L) NA 2 (L) NA 7 and 8 (W) NA	5- From NA to NA 2- From NA to NA	From (5) NA to (2) NA

Primary Examiner	Level	Initials	Assistant Examiner	Level	Initials	Non-Technical Review	Date
James F. Halley	III	JFH	N/A	N/A		Lynda Duke	10-17-01

SNC NDE Level II/III Review		Date	Percentage of Code Coverage	ANII Review	Date
[signature]	III	10-18-01	100	[signature]	10/18/01

Revision 2.0

SHARED

Farley Nuclear Plant
Ultrasonic Calibration and Examination Record

FNP-0-NDE-100.34
Southern Nuclear Operating Company

Unit	Sketch/Component Number	Date	Sheet No.
1	ALA1-2100-12	10/14/01	S01F1U071 Page 1 of 1

Procedure/Rev./TCN	Couplant/Batch No.	ThermometerSN/Cal Due Date	Linearity Sheet No.
FNP-0-NDE-100.34 / 6.0 / N/A	Ultragel II / 01125	43619 2/25/02	S01F1L001

Instrument

	Axial dB	Circ dB
Instrument: Staveley / SONIC 136		
Serial No. 136-911K		
Reference	32.6	32.6
Scanning	44.6	44.6
Reject	OFF	
Frequency	2.25	
Mode	P/E	
Damping	500 OHMS	

Search Unit

Transducer Mfg.	KBA
Serial Number	C26672
Model No.	N/A
Size / No.	1.0" Shape Round
Frequency/Mode	2.25 / Long
"A" Dimension	N/A
Nom Angle	0 °
Meas Angle	N/A °
Cable Type / No. Conn.	RG58 / 1
Cable Length	20'

Calibration Block

Cal. Blk. No.	APR-7
Thickness	3.5
Cal. Temp	69 °F
Cal. In	12:40
Cal. Chk.	1405
Cal. Out	17:40
Ref. Blk. No.	796478
Reflector/dB	BW / 22
Amp/Sweep	80 % / 1.9

Axial Scan Calibration				Circ Scan Calibration			
Cal. Refl.	Signal Amp.	Sweep Div.	Wmax	Cal. Refl.	Signal Amp.	Sweep Div.	Wmax
1/4T	65	1.5	N/A	1/4T	65	1.5	N/A
1/2T	65	3.0	N/A	1/2T	65	3.0	N/A
3/4T	80	4.5	N/A	3/4T	80	4.5	N/A
1T	100+	6.0	N/A	1T	100+	6.0	N/A

Calibration Remarks:

2 Scan Performed from Nozzle Side; 5 Scan Performed from Vessel Side; Reference Relief Request 6 for coverage caculations.

Comp Temp.	Configuration -	Wo Loc.	Lo Loc.
86 °F	SPRAY NOZZLE TO PZR TOP HEAD		

Scan Dir.	Results NI	Results NRI	Results RI	Ind No.	% DAC	Length L1	Length Lmax	Length L2	Reference Measurement W1	Reference Measurement Wmax	Reference Measurement W2	Sweep Position S1	Sweep Position Smax	Sweep Position S2	Thickness 1"<--	Thickness C/L	Thickness -->1"	Notes:
5	○	◉	○															
2	○	◉	○															

Examination/Limitation Remarks: *OUTSIDE RADIUS OF ABOVE ELBOW
Relief Request-6 Sal 10-17-01

Total Length of Weld	Crown Width	Total Length of Weld Examined	Extent of Perpendicular Scans (W)	Extent of Parallel Scans (L)
360°	FLUSH	5 (L) NL 2 (L) NL 7 and 8 (W) NA	5- From NL to BOSS 2- From BOSS to NL	From (5) NA to (2) NA

Primary Examiner	Level	Initials	Assistant Examiner	Level	Initials	Non-Technical Review	Date
James F. Halley	III	JFH	N/ A	N/A		Lynda Duke	10-17-01

SNC NDE Level II/III Review		Date	Percentage of Code Coverage	ANII Review	Date
Gary L. Lefler	III	10-17-01	75% composite	C G Ward	10/18/01

Revision 6.0

SHARED

Farley Nuclear Plant
Ultrasonic Calibration and Examination Record

FNP-0-NDE-100.34
Southern Nuclear Operating Company

Unit	Sketch/Component Number	Date	Sheet No.
1	ALA1-2100-12	10/14/01	S01F1U072 Page 1 of 1

Procedure/Rev./TCN	Couplant/Batch No.	ThermometerSN/Cal Due Date	Linearity Sheet No.
FNP-0-NDE-100.34 / 6.0 / N/A	Ultragel II / 01125	43619 2/25/02	S01F1L001

Instrument

Instrument	Staveley / SONIC 136	
Serial No.	136-911K	
	Axial dB	Circ dB
Reference	38.4	38.4
Scanning	50.4	50.4
Reject	OFF	
Frequency	2.25	
Mode	P/E	
Damping	500 OHMS	

Search Unit

Transducer Mfg.	KBA
Serial Number	00B955
Model No.	113-292-600
Size / No.	.5" x 1.0" Shape Round
Frequency/Mode	2.25 / Shear
"A" Dimension	.70"
Nom Angle	45 °
Meas Angle	45 °
Cable Type / No. Conn.	RG58 / 1
Cable Length	20'

Calibration Block

Cal. Blk. No.	APR-7
Thickness	3.5
Cal. Temp	69 °F
Cal. In	12:35
Cal. Chk.	1405
Cal. Out	17:43
Ref. Blk. No.	796478
Reflector/dB	HOLE/38.6
Amp/Sweep	70 % / 2.1

Axial Scan Calibration				Circ Scan Calibration			
Cal. Refl.	Signal Amp.	Sweep Div.	Wmax	Cal. Refl.	Signal Amp.	Sweep Div.	Wmax
1/4T	80	1.5	.90	1/4T	80	1.5	.90
1/2T	55	2.9	1.75	1/2T	55	2.9	1.75
3/4T	35	4.5	2.55	3/4T	35	4.5	2.55
1T	12	6.2	3.6	1T	12	6.2	3.6

Calibration Remarks:

2 Scan Performed from Nozzle Side; 5 Scan Performed from Vessel Side; Reference Relief Request 6 for coverage caculations.

Comp Temp.	Configuration -	Wo Loc.	Lo Loc.
86 °F	SPRAY NOZZLE TO PZR TOP HEAD	C/L OF WELD	*

Scan Dir.	Results NI	Results NRI	Results RI	Ind No.	% DAC	Length L1	Length Lmax	Length L2	Reference Measurement W1	Reference Measurement Wmax	Reference Measurement W2	Sweep Position S1	Sweep Position Smax	Sweep Position S2	Thickness 1"<--	Thickness C/L	Thickness -->1"	Notes:
8	○	◉	○															
7	○	◉	○															
5	○	◉	○															
2	○	◉	○															

Examination/Limitation Remarks: *OUTSIDE RADIUS OF ABOVE ELBOW
Relief Request-6 Yes 10-17-01

Total Length of Weld	Crown Width	Total Length of Weld Examined	Extent of Perpendicular Scans (W)	Extent of Parallel Scans (L)
360°	FLUSH	5 (L) NL 2 (L) NL 7 and 8 (W) NL	5- From NL to BOSS 2- From BOSS to NL	From (5) NL to (2) NL

Primary Examiner	Level	Initials	Assistant Examiner	Level	Initials	Non-Technical Review	Date
James F. Halley	III	JFH	N/ A	N/A		Lynda Duke	10-17-01

SNC NDE Level II/III Review		Date	Percentage of Code Coverage	ANII Review	Date
Gary A. Loftin	III	10-17-01	75 % composite	C G Ward	10/18/01

Revision 6.0

SHARED

Farley Nuclear Plant
Ultrasonic Calibration and Examination Record

FNP-0-NDE-100.34
Southern Nuclear Operating Company

Unit	Sketch/Component Number	Date	Sheet No.
1	ALA1-2100-12	10/14/01	S01F1U073 Page 1 of 1

Procedure/Rev./TCN	Couplant/Batch No.	ThermometerSN/Cal Due Date	Linearity Sheet No.
FNP-0-NDE-100.34 / 6.0 / N/A	Ultragel II / 01125	43619 2/25/02	S01F1L001

Instrument

	Axial dB	Circ dB
Instrument	Staveley / SONIC 136	
Serial No.	136-911K	
Reference	59.4	59.4
Scanning	71.4	71.4
Reject	OFF	
Frequency	2.25	
Mode	P/E	
Damping	500 ohms	

Search Unit

Transducer Mfg.	KBA
Serial Number	009XBK
Model No.	113-292-600
Size / No.	.5" x 1.0" Shape Rect.
Frequency/Mode	2.25 / Shear
"A" Dimension	.70"
Nom Angle	60°
Meas Angle	62°
Cable Type / No. Conn.	RG58 / 1
Cable Length	20'

Calibration Block

Cal. Blk. No.	APR-7
Thickness	3.5
Cal. Temp	69 °F
Cal. In	12:30
Cal. Chk.	1435
Cal. Out	17:46
Ref. Blk. No.	796478
Reflector/dB	HOLE/59.4
Amp/Sweep	20 % / 1.5

Axial Scan Calibration				Circ Scan Calibration			
Cal. Refl.	Signal Amp.	Sweep Div.	Wmax	Cal. Refl.	Signal Amp.	Sweep Div.	Wmax
1/4T	80	1.5	1.6	1/4T	80	1.5	1.6
1/2T	50	3.0	3.4	1/2T	50	3.0	3.4
3/4T	35	4.5	4.9	3/4T	35	4.5	4.9
1T	10	6.2	6.6	1T	10	6.2	6.6

Calibration Remarks:

2 Scan Performed from Nozzle Side; 5 Scan Performed from Vessel Side; Reference Relief Request 6 for coverage caculations.

Comp Temp.	Configuration -	Wo Loc.	Lo Loc.
86 °F	SPRAY NOZZLE TO PZR TOP HEAD	C/L OF WELD	*

Scan Dir.	Results NI	Results NRI	Results RI	Ind No.	% DAC	Length L1	Length Lmax	Length L2	Reference Measurement W1	Reference Measurement Wmax	Reference Measurement W2	Sweep Position S1	Sweep Position Smax	Sweep Position S2	Thickness 1"<--	Thickness C/L	Thickness -->1"	Notes:
8	○	◉	○															
7	○	◉	○															
5	○	◉	○															
2	○	◉	○															

Examination/Limitation Remarks: *OUTSIDE RADIUS OF ABOVE ELBOW
Relief Request 6 Sal 10-17-01

Total Length of Weld	Crown Width	Total Length of Weld Examined	Extent of Perpendicular Scans (W)	Extent of Parallel Scans (L)
360°	FLUSH	5 (L) NL 2 (L) NL 7 and 8 (W) NL	5- From NL to BOSS 2- From BOSS to NL	From (5) NL to (2) NL

Primary Examiner	Level	Initials	Assistant Examiner	Level	Initials	Non-Technical Review	Date
James F. Halley	III	JFH	N/A	N/A		Lynda Duke	10-17-01

SNC NDE Level II/III Review		Date	Percentage of Code Coverage	ANII Review	Date
Darryl Lothus	III	10-17-01	75% composite	C G Ward	10/18/01

Revision 6.0

SHARED

Farley Nuclear Plant
Ultrasonic Calibration and Examination Record

FNP-0-NDE-100.34
Southern Nuclear Operating Company

Unit	Sketch/Component Number	Date	Sheet No.
1	ALA1-2100-12	10/14/01	S01F1U074 Page 1 of 1

Procedure/Rev./TCN	Couplant/Batch No.	ThermometerSN/Cal Due Date	Linearity Sheet No.
FNP-0-NDE-100.34 / 6.0 / N/A	Ultragel II / 01125	43619 2/25/02	S01F1L001

Instrument

Instrument	Staveley / SONIC 136	
Serial No.	136-911K	
	Axial dB	Circ dB
Reference	56.6	56.6
Scanning	68.6	68.6
Reject	OFF	
Frequency	2.25	
Mode	P/E	
Damping	500 OHMS	

Search Unit

Transducer Mfg.	KBA
Serial Number	009XBL
Model No.	113-292-600
Size / No.	.5" x 1.0" Shape Rect
Frequency/Mode	2.25 / Shear
"A" Dimension	.90"
Nom Angle	70°
Meas Angle	70°
Cable Type / No. Conn.	RG58 / 1
Cable Length	20'

Calibration Block

Cal. Blk. No.	APR-7
Thickness	3.5
Cal. Temp	69 °F
Cal. In	12:20
Cal. Chk.	1455
Cal. Out	17:50
Ref. Blk. No.	796478
Reflector/dB	HOLE/48.4
Amp/Sweep	80 % / 3.7

Axial Scan Calibration				Circ Scan Calibration			
Cal. Refl.	Signal Amp.	Sweep Div.	Wmax	Cal. Refl.	Signal Amp.	Sweep Div.	Wmax
1/4T	80	4.0	2.5	1/4T	80	4.0	2.5
1/2T	35	8.0	4.5	1/2T	35	8.0	4.5

Calibration Remarks:

2 Scan Performed from Nozzle Side; 5 Scan Performed from Vessel Side; Reference Relief Request 6 for coverage caculations.

Comp Temp.	Configuration -	Wo Loc.	Lo Loc.
86 °F	SPRAY NOZZLE TO PZR TOP HEAD	C/L OF WELD	*

Scan Dir.	Results NI	Results NRI	Results RI	Ind No.	% DAC	Length L1	Length Lmax	Length L2	Reference Measurement W1	Reference Measurement Wmax	Reference Measurement W2	Sweep Position S1	Sweep Position Smax	Sweep Position S2	Thickness 1"<--	Thickness C/L	Thickness -->1"	Notes:
8	○	◉	○															
7	○	◉	○															
5	○	◉	○															
2	○	◉	○															

Examination/Limitation Remarks: *OUTSIDE RADIUS OF ABOVE ELBOW
Relief Request-6 Gal 10-17-01

Total Length of Weld	Crown Width	Total Length of Weld Examined	Extent of Perpendicular Scans (W)	Extent of Parallel Scans (L)
360°	FLUSH	5 (L) NL 2 (L) NL 7 and 8 (W) NL	5- From NL to BOSS 2- From BOSS to NL	From (5) NL to (2) NL

Primary Examiner	Level	Initials	Assistant Examiner	Level	Initials	Non-Technical Review	Date
James F. Halley	III	JFH	N/A	N/A		Lynda Duke	10-17-01

SNC NDE Level II/III Review		Date	Percentage of Code Coverage	ANII Review	Date
Danny L. Rifflers	III	10-17-01	75% composite	C G Ward	10/18/01

Revision 6.0

Farley Nuclear Plant
Magnetic Particle Examination Record

SHARED

FNP-0-NDE-100.11
MT-F-FORM 002
Southern Nuclear Operating Company

Unit	Weld Number	Procedure/Rev./TCN	Sheet No.
1	ALA1-2100-12	FNP-0-NDE-100.11 / 4.0 / N/A	S01F1M002 Page 1 of 1

Thermometer
Mfg./Ser. No. PTC / 43619
Cal. Due Date 02/25/02
Surface Temp. 86 °F

Magnetizing Yoke
Mfg.: Parker
Power AC
Serial No.: 2827
Pole Spacing: 7.5"
Field Indicator S/N: N/A
Field Indicator Acceptable [Y/N] N/A

MT Materials
Mfg.: Magnaflux
Batch Number: 95H062
Color: Red
Type: No. 8A

Component Configuration
SPRAY NOZZLE TO PZR TOP HEAD

% of Length Coverage 100%
% of Area Coverage 100%
Date 10/14/01

Ind. No.	Results	Indication Desc. / Exam Limitations / etc.	Remarks
N/A	NI	NA	NONE

Remarks: Supplemental Surface Exam.

Primary Examiner	ASNT Level	Initials	Assistant Examiner	ASNT Level	Initials	Non-Technical Review	Date
Harry Ackerman	II	HA	John W. Bell	II	JWB	Lynda Auke	10-16-01

SNC NDE Level II/III Review		Date	Percentage of Code Coverage	ANII Review	Date
Larry A. Loftus	III	10-16-01	100	C G Ward	10/17/01

Revision 4.

SHAPED

Farley Nuclear Plant
Ultrasonic Calibration and Examination Record

FNP-0-NDE-100.38
Southern Nuclear Operating Company

Unit	Sketch/Component Number	Date	Sheet No.
1	ALA1-2100-12IR	10/13/01	S01F1U054 Page 1 of 1

Procedure/Rev./TCN	Couplant/Batch No.	ThermometerSN/Cal Due Date	Linearity Sheet No.
FNP-0-NDE-100.38 / 2.0 / N/A	Ultragel II / 01125	43619 2/25/02	S01F1L002

Instrument

Instrument	Staveley / SONIC 136	
Serial No.	136-911K	
	Axial dB	Circ dB
Reference	N/A	66.6
Scanning	N/A	72.6
Reject	OFF	
Frequency	2.25	
Mode	P/E	
Damping	500 OHMS	

Search Unit

Transducer Mfg.	KBA
Serial Number	007RMJ
Model No.	113-242-591
Size / No.	.50 Shape Round
Frequency/Mode	2.25 / Shear
"A" Dimension	.35"
Nom Angle	20°
Meas Angle	20°
Cable Type / No. Conn.	RG174 / 0
Cable Length	12'

Calibration Block

Cal. Blk. No.	ALA-38
Thickness	6.01
Cal. Temp	75 °F
Cal. In	12:00
Cal. Chk.	13:30
Cal. Out	15:30
Ref. Blk. No.	796478
Reflector/dB	HOLE / 68
Amp/Sweep	100 % / 1.5

Axial Scan Calibration				Circ Scan Calibration			
Cal. Refl.	Signal Amp.	Sweep Div.	Wmax	Cal. Refl.	Signal Amp.	Sweep Div.	Wmax
A NOTCH	80%	3.0	2.7"	N/A			
B NOTCH	60%	5.0	3.4"	N/A			
C NOTCH	50%	7.0	4.0"	N/A			

Calibration Remarks:
w Max taken from top clad edge of block

Comp Temp.	Configuration -	Wo Loc.	Lo Loc.
86 °F	PZR NOZZLE INNER RADIUS	C/L OF RADIUS	*

Scan Dir.	Results NI	NRI	RI	Ind No.	% DAC	Length L1	Lmax	L2	Reference Measurement W1	Wmax	W2	Sweep Position S1	Smax	S2	Thickness 1"<--	C/L	-->1"	Notes:
8	○	◉	○															
7	○	◉	○															

Examination/Limitation Remarks: *OUTSIDE RADIUS OF ABOVE ELBOW

Total Length of Weld	Crown Width	Total Length of Weld Examined	Extent of Perpendicular Scans (W)	Extent of Parallel Scans (L)
NA	NA	5 (L) NA 2 (L) NA 7 and 8 (W) NA	5- From NA to NA 2- From NA to NA	From (5) NA to (2) NA

Primary Examiner	Level	Initials	Assistant Examiner	Level	Initials	Non-Technical Review	Date
James F. Halley	III	JFH	N/A	N/A		Lynda Duke	10-17-01

SNC NDE Level II/III Review		Date	Percentage of Code Coverage	ANII Review	Date
Harry A. Lefler	III	10-18-01	100	[illegible]	10/18/01

Revision 2.0

SHARED

Farley Nuclear Plant
Ultrasonic Calibration and Examination Record

FNP-0-NDE-100.34
Southern Nuclear Operating Company

Unit	Sketch/Component Number	Date	Sheet No.
1	ALA1-2100-13	10/14/01	S01F1U075 Page 1 of 1

Procedure/Rev./TCN	Couplant/Batch No.	ThermometerSN/Cal Due Date	Linearity Sheet No.
FNP-0-NDE-100.34 / 6.0 / N/A	Ultragel II / 01125	43619 2/25/02	S01F1L001

Instrument

Instrument	Staveley / SONIC 136	
Serial No.	136-911K	
	Axial dB	Circ dB
Reference	32.6	32.6
Scanning	44.6	44.6
Reject	OFF	
Frequency	2.25	
Mode	P/E	
Damping	500 OHMS	

Search Unit

Transducer Mfg.	KBA
Serial Number	C26672
Model No.	N/A
Size / No.	1.0" Shape Round
Frequency/Mode	2.25 / Long
"A" Dimension	N/A
Nom Angle	0 °
Meas Angle	N/A °
Cable Type / No. Conn.	RG58 / 1
Cable Length	20'

Calibration Block

Cal. Blk. No.	APR-7
Thickness	3.5
Cal. Temp	69 °F
Cal. In	12:40
Cal. Chk.	1600
Cal. Out	17:40
Ref. Blk. No.	796478
Reflector/dB	BW / 22
Amp/Sweep	80 % / 1.9

Axial Scan Calibration				Circ Scan Calibration			
Cal. Refl.	Signal Amp.	Sweep Div.	Wmax	Cal. Refl.	Signal Amp.	Sweep Div.	Wmax
1/4T	65	1.5	N/A	1/4T	65	1.5	N/A
1/2T	65	3.0	N/A	1/2T	65	3.0	N/A
3/4T	80	4.5	N/A	3/4T	80	4.5	N/A
1T	100+	6.0	N/A	1T	100+	6.0	N/A

Calibration Remarks:

2 Scan Performed from Nozzle Side; 5 Scan Performed from Vessel Side; Reference Relief Request 6 for coverage caculations.

Comp Temp.	Configuration -	Wo Loc.	Lo Loc.
86 °F	SAFETY NOZZLE TO PZR TOP HEAD	C/L OF WELD	*

Scan Dir.	Results NI	Results NRI	Results RI	Ind No.	% DAC	Length L1	Length Lmax	Length L2	Reference Measurement W1	Reference Measurement Wmax	Reference Measurement W2	Sweep Position S1	Sweep Position Smax	Sweep Position S2	Thickness 1"<--	Thickness C/L	Thickness -->1"	Notes:
5	○	◉	○															
2	○	◉	○															

Examination/Limitation Remarks: *OUTSIDE RADIUS OF ABOVE ELBOW
Relief Request - 6 Dal 10-17-01

Total Length of Weld	Crown Width	Total Length of Weld Examined	Extent of Perpendicular Scans (W)	Extent of Parallel Scans (L)
360°	FLUSH	5 (L) NL 2 (L) NL 7 and 8 (W) NA	5- From NL to BOSS 2- From BOSS to NL	From (5) NA to (2) NA

Primary Examiner	Level	Initials	Assistant Examiner	Level	Initials	Non-Technical Review	Date
James F. Halley	III	JFH	N/ A	N/A		Lynda Duke	10-17-01

SNC NDE Level II/III Review		Date	Percentage of Code Coverage	ANII Review	Date
Danny L. Lothes	III	10-17-01	75% composite	C G Ward	10/18/01

Revision 6.0

SHARED

Farley Nuclear Plant
Ultrasonic Calibration and Examination Record

FNP-0-NDE-100.34
Southern Nuclear Operating Company

Unit	Sketch/Component Number	Date	Sheet No.
1	ALA1-2100-13	10/14/01	S01F1U077 Page 1 of 1

Procedure/Rev./TCN	Couplant/Batch No.	ThermometerSN/Cal Due Date	Linearity Sheet No.
FNP-0-NDE-100.34 / 6.0 / N/A	Ultragel II / 01125	43619 2/25/02	S01F1L001

Instrument

Instrument	Staveley / SONIC 136	
Serial No.	136-911K	
	Axial dB	Circ dB
Reference	38.4	38.4
Scanning	50.4	50.4
Reject	OFF	
Frequency	2.25	
Mode	P/E	
Damping	500 OHMS	

Search Unit

Transducer Mfg.	KBA
Serial Number	00B955
Model No.	113-292-600
Size / No.	.5" x 1.0" Shape Round
Frequency/Mode	2.25 / Shear
"A" Dimension	.70"
Nom Angle	45 °
Meas Angle	45 °
Cable Type / No. Conn.	RG58 / 1
Cable Length	20'

Calibration Block

Cal. Blk. No.	APR-7
Thickness	3.5
Cal. Temp	69 °F
Cal. In	12:35
Cal. Chk.	1615
Cal. Out	17:43
Ref. Blk. No.	796478
Reflector/dB	HOLE/38.6
Amp/Sweep	70 % / 2.1

Axial Scan Calibration

Cal. Refl.	Signal Amp.	Sweep Div.	Wmax
1/4T	80	1.5	.90
1/2T	55	2.9	1.75
3/4T	35	4.5	2.55
1T	12	6.2	3.6

Circ Scan Calibration

Cal. Refl.	Signal Amp.	Sweep Div.	Wmax
1/4T	80	1.5	.90
1/2T	55	2.9	1.75
3/4T	35	4.5	2.55
1T	12	6.2	3.6

Calibration Remarks:

2 Scan Performed from Nozzle Side; 5 Scan Performed from Vessel Side; Reference Relief Request 6 for coverage caculations.

Comp Temp.	Configuration -	Wo Loc.	Lo Loc.
86 °F	SAFETY NOZZLE TO PZR TOP HEAD	C/L OF WELD	*

Scan Dir.	Results NI	Results NRI	Results RI	Ind No.	% DAC	Length L1	Length Lmax	Length L2	Reference Measurement W1	Reference Measurement Wmax	Reference Measurement W2	Sweep Position S1	Sweep Position Smax	Sweep Position S2	Thickness 1"<--	Thickness C/L	Thickness -->1"	Notes:
8	○	◉	○															
7	○	◉	○															
5	○	◉	○															
2	○	◉	○															

Examination/Limitation Remarks: *OUTSIDE RADIUS OF ABOVE ELBOW
Relief Request-6 Jol 10-17-01

Total Length of Weld	Crown Width	Total Length of Weld Examined	Extent of Perpendicular Scans (W)	Extent of Parallel Scans (L)
360°	FLUSH	5 (L) NL 2 (L) NL 7 and 8 (W) NL	5- From NL to BOSS 2- From BOSS to NL	From (5) NL to (2) NL

Primary Examiner	Level	Initials	Assistant Examiner	Level	Initials	Non-Technical Review	Date
James F. Halley	III	JFH	N/A	N/A		Lynda Duke	10-17-01

SNC NDE Level II/III Review		Date	Percentage of Code Coverage	ANII Review	Date
Daryl L. Lofties	III	10-17-01	75% composite	[illegible]	10/18/01

Revision 6.0

SHARED

Farley Nuclear Plant
Ultrasonic Calibration and Examination Record

FNP-0-NDE-100.34
Southern Nuclear Operating Company

Unit	Sketch/Component Number	Date	Sheet No.
1	ALA1-2100-13	10/14/01	S01F1U078 Page 1 of 1

Procedure/Rev./TCN	Couplant/Batch No.	ThermometerSN/Cal Due Date	Linearity Sheet No.
FNP-0-NDE-100.34 / 6.0 / N/A	Ultragel II / 01125	43619 2/25/02 Do 10-17-01	S01F1L001

Instrument

Instrument: Staveley / SONIC 136
Serial No. 136-911K

	Axial dB	Circ dB
Reference	59.4	59.4
Scanning	71.4	71.4

Reject: OFF
Frequency: 2.25
Mode: P/E
Damping: 500 ohms

Search Unit

Transducer Mfg. KBA
Serial Number 009XBK
Model No. 113-292-600
Size / No. .5" x 1.0" Shape Rect.
Frequency/Mode 2.25 / Shear
"A" Dimension .70"
Nom Angle 60°
Meas Angle 62°
Cable Type / No. Conn. RG58 / 1
Cable Length 20'

Calibration Block

Cal. Blk. No. APR-7
Thickness 3.5
Cal. Temp 69 °F
Cal. In 12:30
Cal. Chk. 1630
Cal. Out 17:46
Ref. Blk. No. 796478
Reflector/dB HOLE/59.4
Amp/Sweep 20 % / 1.5

Axial Scan Calibration

Cal. Refl.	Signal Amp.	Sweep Div.	Wmax
1/4T	80	1.5	1.6
1/2T	50	3.0	3.4
3/4T	35	4.5	4.9
1T	10	6.2	6.6

Circ Scan Calibration

Cal. Refl.	Signal Amp.	Sweep Div.	Wmax
1/4T	80	1.5	1.6
1/2T	50	3.0	3.4
3/4T	35	4.5	4.9
1T	10	6.2	6.6

Calibration Remarks:

2 Scan Performed from Nozzle Side; 5 Scan Performed from Vessel Side; Reference Relief Request 6 for coverage caculations.

Comp Temp. 86 °F | Configuration - SAFETY NOZZLE TO PZR TOP HEAD | Wo Loc. C/L OF WELD | Lo Loc. *

Scan Dir.	Results NI	Results NRI	Results RI	Ind No.	% DAC	Length L1	Length Lmax	Length L2	Reference Measurement W1	Wmax	W2	Sweep Position S1	Smax	S2	Thickness 1"<--	C/L	-->1"	Notes:
8	○	◉	○															
7	○	◉	○															
5	○	◉	○															
2	○	◉	○															

Examination/Limitation Remarks: *OUTSIDE RADIUS OF ABOVE ELBOW
Relief Request -6 JFH 10-17-01

Total Length of Weld	Crown Width	Total Length of Weld Examined	Extent of Perpendicular Scans (W)	Extent of Parallel Scans (L)
360°	FLUSH	5 (L) NL 2 (L) NL 7 and 8 (W) NL	5- From NL to BOSS 2- From BOSS to NL	From (5) NL to (2) NL

Primary Examiner	Level	Initials	Assistant Examiner	Level	Initials	Non-Technical Review	Date
James F. Halley	III	JFH	N/ A	N/A		Lynda Duke	10-17-01

SNC NDE Level II/III Review		Date	Percentage of Code Coverage	ANII Review	Date
Darryl Loftus	III	10-17-01	75% complete	C G Wand	10/18/01

Revision 6.0

SHARED

Farley Nuclear Plant
Ultrasonic Calibration and Examination Record

FNP-0-NDE-100.34
Southern Nuclear Operating Company

Unit	Sketch/Component Number	Date	Sheet No.
1	ALA1-2100-13	10/14/01	S01F1U079 Page 1 of 1

Procedure/Rev./TCN	Couplant/Batch No.	ThermometerSN/Cal Due Date	Linearity Sheet No.
FNP-0-NDE-100.34 / 6.0 / N/A	Ultragel II / 01125	43619 2/25/02	S01F1L001

Instrument

Instrument	Staveley / SONIC 136	
Serial No.	136-911K	
	Axial dB	Circ dB
Reference	56.6	56.6
Scanning	68.6	68.6
Reject	OFF	
Frequency	2.25	
Mode	P/E	
Damping	500 OHMS	

Search Unit

Transducer Mfg.	KBA
Serial Number	009XBL
Model No.	113-292-600
Size / No.	.5" x 1.0" Shape Rect
Frequency/Mode	2.25 / Shear
"A" Dimension	.90"
Nom Angle	70°
Meas Angle	70°
Cable Type / No. Conn.	RG58 / 1
Cable Length	20'

Calibration Block

Cal. Blk. No.	APR-7
Thickness	3.5
Cal. Temp	69 °F
Cal. In	12:20
Cal. Chk.	1645
Cal. Out	17:50
Ref. Blk. No.	796478
Reflector/dB	HOLE/48.4
Amp/Sweep	80 % / 3.7

Axial Scan Calibration				Circ Scan Calibration			
Cal. Refl.	Signal Amp.	Sweep Div.	Wmax	Cal. Refl.	Signal Amp.	Sweep Div.	Wmax
1/4T	80	4.0	2.5	1/4T	80	4.0	2.5
1/2T	35	8.0	4.5	1/2T	35	8.0	4.5

Calibration Remarks:

2 Scan Performed from Nozzle Side; 5 Scan Performed from Vessel Side; Reference Relief Request 6 for coverage caculations.

Comp Temp.	Configuration -	Wo Loc.	Lo Loc.
86 °F	SAFETY NOZZLE TO PZR TOP HEAD	C/L OF WELD	*

Scan Dir.	Results NI	NRI	RI	Ind No.	% DAC	Length L1	Lmax	L2	Reference Measurement W1	Wmax	W2	Sweep Position S1	Smax	S2	Thickness 1"<-	C/L	->1"	Notes:
8	○	◉	○															
7	○	◉	○															
5	○	◉	○															
2	○	◉	○															

Examination/Limitation Remarks: *OUTSIDE RADIUS OF ABOVE ELBOW
Relief Request-6 Hal 10-17-01

Total Length of Weld	Crown Width	Total Length of Weld Examined	Extent of Perpendicular Scans (W)	Extent of Parallel Scans (L)
360°	FLUSH	5 (L) NL 2 (L) NL 7 and 8 (W) NL	5- From NL to BOSS 2- From BOSS to NL	From (5) NL to (2) NL

Primary Examiner	Level	Initials	Assistant Examiner	Level	Initials	Non-Technical Review	Date
James F. Halley	III	JFH	N/A	N/A		Lynda Duke	10-17-01

SNC NDE Level II/III Review		Date	Percentage of Code Coverage	ANII Review	Date
[signature]	III	10-17-01	75% composite	[signature]	10/18/01

Revision 6.0

Farley Nuclear Plant
Magnetic Particle Examination Record

SHARED

FNP-0-NDE-100.11
MT-F-FORM 002
Southern Nuclear Operating Company

Unit	Weld Number	Procedure/Rev./TCN	Sheet No.
1	ALA1-2100-13	FNP-0-NDE-100.11 / 4.0 / N/A	S01F1M003 Page 1 of 1

Thermometer

Mfg./Ser. No. PTC / 43619
Cal. Due Date 02/25/02
Surface Temp. 86 ° F

Magnetizing Yoke

Mfg.: Parker
Power AC
Serial No.: 2827
Pole Spacing: 7.5"
Field Indicator S/N: N/A
Field Indicator Acceptable [Y/N] N/A

MT Materials

Mfg.: Magnaflux
Batch Number: 95H062
Color: Red
Type: No. 8A

Component Configuration
SAFETY NOZZLE TO PZR TOP HEAD

% of Length Coverage 100%
% of Area Coverage 100%
Date 10/14/01

Ind. No.	Results	Indication Desc. / Exam Limitations / etc.	Remarks
N/A	NI	N/A	NONE

Remarks: Supplemental Surface Exam.

Primary Examiner	ASNT Level	Initials	Assistant Examiner	ASNT Level	Initials	Non-Technical Review	Date
Harry Ackerman	II	HA	John W. Bell	II	JWB	Lynda Duke	10-16-01

SNC NDE Level II/III Review		Date	Percentage of Code Coverage	ANII Review	Date
Gary A. Lofthus	III	10-16-01	100	CG Wood	10/17/01

Revision 4.

SHARED

Farley Nuclear Plant
Ultrasonic Calibration and Examination Record

FNP-0-NDE-100.38
Southern Nuclear Operating Company

Unit	Sketch/Component Number	Date	Sheet No.
1	ALA1-2100-13IR	10/13/01	S01F1U055 Page 1 of 1

Procedure/Rev./TCN	Couplant/Batch No.	ThermometerSN/Cal Due Date	Linearity Sheet No.
FNP-0-NDE-100.38 / 2.0 / N/A	Ultragel II / 01125	43619 2/25/02	S01F1L002

Instrument

Instrument	Staveley / SONIC 136	
Serial No.	136-911K	
	Axial dB	Circ dB
Reference	N/A	66.6
Scanning	N/A	72.6
Reject	OFF	
Frequency	2.25	
Mode	P/E	
Damping	500 OHMS	

Search Unit

Transducer Mfg.	KBA
Serial Number	007RMJ
Model No.	113-242-591
Size / No.	.50 Shape Round
Frequency/Mode	2.25 / Shear
"A" Dimension	.35"
Nom Angle	20°
Meas Angle	20°
Cable Type / No. Conn.	RG174 / 0
Cable Length	12'

Calibration Block

Cal. Blk. No.	ALA-38
Thickness	6.01
Cal. Temp	75 °F
Cal. In	12:00
Cal. Chk.	13:50
Cal. Out	15:30
Ref. Blk. No.	796478
Reflector/dB	HOLE / 68
Amp/Sweep	100 % / 1.5

Axial Scan Calibration				Circ Scan Calibration			
Cal. Refl.	Signal Amp.	Sweep Div.	Wmax	Cal. Refl.	Signal Amp.	Sweep Div.	Wmax
A NOTCH	80%	3.0	2.7"	N/A			
B NOTCH	60%	5.0	3.4"	N/A			
C NOTCH	50%	7.0	4.0"	N/A			

Calibration Remarks:
w Max taken from top clad edge of block

Comp Temp.	Configuration -	Wo Loc.	Lo Loc.
86 °F	PZR NOZZLE INNER RADIUS	C/L OF RADIUS	*

Scan Dir.	Results NI	NRI	RI	Ind No.	% DAC	Length L1	Lmax	L2	Reference Measurement W1	Wmax	W2	Sweep Position S1	Smax	S2	Thickness 1"<--	C/L	-->1"	Notes:
8	○	◉	○															
7	○	◉	○															

Examination/Limitation Remarks: *OUTSIDE RADIUS OF ABOVE ELBOW

Total Length of Weld	Crown Width	Total Length of Weld Examined	Extent of Perpendicular Scans (W)	Extent of Parallel Scans (L)
NA	NA	5 (L) NA 2 (L) NA 7 and 8 (W) NA	5- From NA to NA 2- From NA to NA	From (5) NA to (2) NA

Primary Examiner	Level	Initials	Assistant Examiner	Level	Initials	Non-Technical Review	Date
James F. Halley	III	JFH	N/A	N/A		Lynda Duke	10-17-01

SNC NDE Level II/III Review		Date	Percentage of Code Coverage	ANII Review	Date
Gary A. Loftus	III	10-18-01	100	C G Kand	10/18/01

Revision 2.0

Farley Nuclear Plant
Ultrasonic Performance Record

SHARED

FNP-0-NDE-100.34
Southern Nuclear Operating Company

Plant/Unit Farley / 1		**Sheet No.** S01F1U082	Page 1 of 1
Instrument Manufacturer Staveley	**Model** SONIC 136	**Serial No.** 136-911K	
Search Unit Type/Manufacturer Beam KBA	**Size** .5" x 1.0" **Frequency** 2.25 MHz	**Angle** 70 °	**Serial No.** 009XBL
Search Unit Cable Type RG-58	**Length / Number Connectors** 20' / 1	**Calibration Block Serial No. And Thickness** APR-7 / 3.5	
Couplant Batch Number Ultragel II / 01125	**Demonstration of Flaw Detectability**	☑ **Acceptable**	

BEAM SPREAD MEASUREMENT

	Surface Distance	Metal Path	
1/4 T Hole			
Minimum (20% DAC Near)	1.90	2.10	
Minimum (50% DAC Near)	2.10	2.28	
Maximum Signal	2.47	2.63	
Minimum (50% DAC Far)	3.52	3.63	
Minimum (20% DAC Far)	4.40	4.49	
1/2 T Hole			
Minimum (20% DAC Near)	3.70	4.09	
Minimum (50% DAC Near)	3.85	4.23	N
Maximum Signal	4.53	4.82	A
Minimum (50% DAC Far)	*	*	
Minimum (20% DAC Far)	*	*	
3/4 T Hole			
Minimum (20% DAC Near)	N/A	N/A	
Minimum (50% DAC Near)	N/A	N/A	
Maximum Signal	N/A	N/A	
Minimum (50% DAC Far)	N/A	N/A	
Minimum (20% DAC Far)	N/A	N/A	

Remarks: * 1/2T 50% & 20% FAR DAC POINTS ARE OFF SCREEN

No Indications recorded. [illegible] 10-18-01

Examiner	**ASNT Level**	**Examiner**	**ASNT Level**	**Date**
James F. Halley JFH	III	N/ A	N/A	10/14/01

NDE Level II/III Review	**ASNT Level**	**Date**
[illegible]	III	10-18-01

Revision 6.

Farley Nuclear Plant
Ultrasonic Performance Record

SHARED

FNP-0-NDE-100.34
Southern Nuclear Operating Company

Plant/Unit Farley / 1		**Sheet No.** S01F1U081	Page 1 of 1
Instrument Manufacturer Staveley	**Model** SONIC 136		**Serial No.** 136-911K
Search Unit Type/Manufacturer Beam KBA	**Size** .5" x 1.0" **Frequency** 2.25 MHz	**Angle** 60 °	**Serial No.** 009XBK
Search Unit Cable Type RG-58	**Length / Number Connectors** 20' / 1	**Calibration Block Serial No. And Thickness** APR-7 / 3.5	
Couplant Batch Number Ultragel II / 01125	**Demonstration of Flaw Detectability**	☑ **Acceptable**	

BEAM SPREAD MEASUREMENT

	Surface Distance	Metal Path	
1/4 T Hole			
Minimum (20% DAC Near)	1.25		
Minimum (50% DAC Near)	1.30		
Maximum Signal	1.60		
Minimum (50% DAC Far)	2.10		
Minimum (20% DAC Far)	2.40		
1/2 T Hole			
Minimum (20% DAC Near)	2.50	N	N
Minimum (50% DAC Near)	2.70	A	A
Maximum Signal	3.40		
1inimum (50% DAC Far)	4.20		
Minimum (20% DAC Far)	4.55		
3/4 T Hole			
Minimum (20% DAC Near)	3.70		
Minimum (50% DAC Near)	4.10		
Maximum Signal	4.90		
Minimum (50% DAC Far)	5.90		
Minimum (20% DAC Far)	6.40		

Remarks: N/A

No Indications recorded.
Gal 10-18-01

Examiner	ASNT Level	Examiner	ASNT Level	Date
James F. Halley JFH	III	N/ A	N/A	10/14/01

NDE Level II/III Review	ASNT Level	Date
Gary A. Griffin	III	10-18-01

Revision 6.

Farley Nuclear Plant
Ultrasonic Performance Record

SHARED

FNP-0-NDE-100.34
Southern Nuclear Operating Company

Plant/Unit Farley / 1		**Sheet No.** S01F1U080	Page 1 of 1
Instrument Manufacturer Staveley	**Model** SONIC 136	**Serial No.** 136-911K	
Search Unit Type/Manufacturer Beam KBA	**Size** .5" x 1.0" **Frequency** 2.25 MHz	**Angle** 45 °	**Serial No.** 00B955
Search Unit Cable Type RG-58	**Length / Number Connectors** 20' / 1	**Calibration Block Serial No. And Thickness** APR-7 / 3.5	
Couplant Batch Number Ultragel II / 01125	**Demonstration of Flaw Detectability**	☑ **Acceptable**	

BEAM SPREAD MEASUREMENT

	Surface Distance	Metal Path	
1/4 T Hole			
Minimum (20% DAC Near)	.75"		
Minimum (50% DAC Near)	.8"		
Maximum Signal	.9"		
Minimum (50% DAC Far)	1.05"		
Minimum (20% DAC Far)	1.2"		
1/2 T Hole			
Minimum (20% DAC Near)	1.50"	N	N
Minimum (50% DAC Near)	1.60"	A	A
Maximum Signal	1.75"		
Minimum (50% DAC Far)	2.0"		
Minimum (20% DAC Far)	2.2"		
3/4 T Hole			
Minimum (20% DAC Near)	2.25"		
Minimum (50% DAC Near)	2.35"		
Maximum Signal	2.55"		
Minimum (50% DAC Far)	2.95"		
Minimum (20% DAC Far)	3.25"		

Remarks: N/A

No Indications recorded. Sal 10-18-01

Examiner	ASNT Level	Examiner	ASNT Level	Date
James F. Halley JFH	III	N/ A	N/A	10/14/01
NDE Level II/III Review Gary A. Loftus		**ASNT Level** III		**Date** 10-18-01

Revision 6.

SHARED

Farley Nuclear Plant — **FNP-0-NDE-100.38**

Jltrasonic Performance Record for Inner Radius Examinations — **Southern Nuclear Operating Company**

Plant/Unit Farley / 1		**Sheet No.** S01F1U056	Page 1 of 1
Instrument Manufacturer Staveley	**Model** SONIC 136	**Serial No.** 136-911K	
Search Unit Type/Manufacturer KBA	**Size** .50 **Frequency** 2.25 MHz	**Angle** 20 °	**Serial No.** 007RMJ
Search Unit Cable Type RG174	**Length / Number Connectors** 12' / 0	**Calibration Block Serial No. And Thickness** ALA-38 / 6.01	
Couplant Batch Number Ultragel II / 01125	**Demonstration of Flaw Detectability**	☑ **Acceptable**	

BEAM SPREAD MEASUREMENTS

	Surface Distance			Metal Path		
Notch A	**100%**	**50%**	**20%**	**100%**	**50%**	**20%**
Maximum	2.7"			3.5"		4.25"
Near		2.4"	2.18"		4.4"	4.25"
Far		2.9"	3.2"		3.8"	3.8"
Notch B						
Maximum	3.4"			4.5"		
Near		2.95"	2.8"		4.4"	4.25"
Far		3.6"	3.8"		4.55"	4.7"
Notch C						
Maximum	4"			5.4"		
Near		3.8"	3.6"		5.3"	5.25"
Far		4.3"	4.6"		5.45"	5.58"

Remarks:

Examiner James F. Halley JFH	**SNT Level** III	**Examiner** N/ A	**SNT Level** N/A	**Date** 10/13/01
NDE Level II/III Review Gary A. Griffin		**SNT Level** III		**Date** 10-18-01

Revision 2.0

1.3

NO EXAMINATIONS SCHEDULED THIS OUTAGE

1:4

EXAMINATION SUMMARY
FOR UNIT 1
INTERVAL 3 PERIOD 2 OUTAGE 1

DRAWING ALA1-4101
12" RHR TAKE OFF-HOT LEG LOOP 1

ITEM NO	VOLUMERIC			SURFACE			VISUAL			REMARKS
	NI	NRI	RI	NI	NRI	RI	NI	NRI	RI	
RHR-R98							X			
RHR-R98 (W2)					X					

CONTAINMENT

12" RHR TAKE-OFF (HOT LEG) LOOP 1

ALA1- 4101

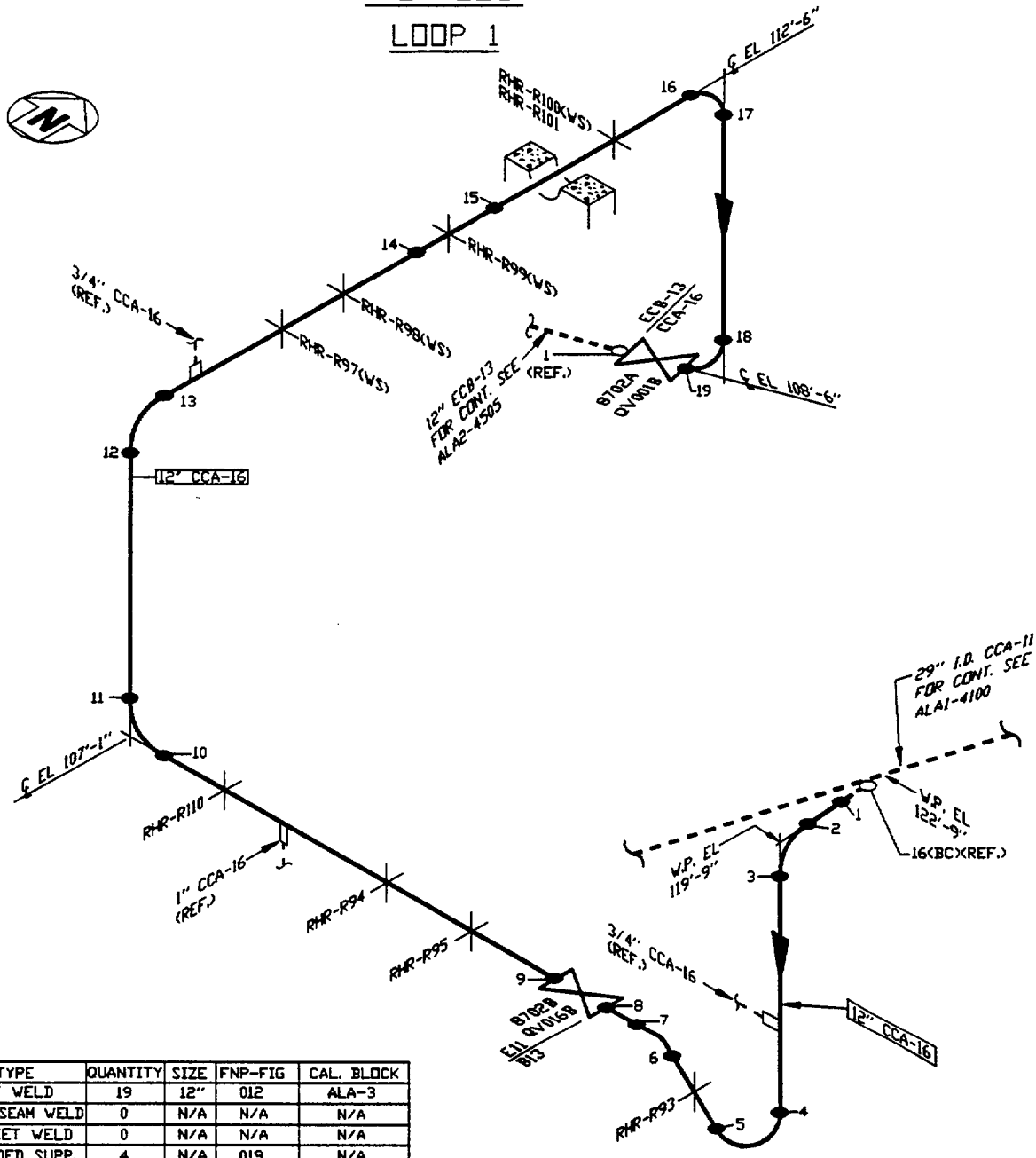

TYPE	QUANTITY	SIZE	FNP-FIG	CAL. BLOCK
BUTT WELD	19	12"	012	ALA-3
LONG SEAM WELD	0	N/A	N/A	N/A
SOCKET WELD	0	N/A	N/A	N/A
WELDED SUPP.	4	N/A	019	N/A
COMP. SUPPORT	9	N/A	037	N/A

VALVE BOLTING (SEE ALA1-6300 SH. 2)

LINE NUMBER: Q-1-B13-CCA-16 Q-1-E11-CCA-16	BOUNDARY DIAGRAM: D-351114 SH. 1
	REFERENCE ISO'S: D-514690 SH.1 & 2
LINE SIZE: 12" CCA-16	

REV.	DATE	BY	CHK'D	DESCRIPTION	APPR.1	APPR.2	APPR.3	APPR.4
1	3-26-98	RAW	JAR	REVISED PER REA 96-1295, REV. 0	LDT	DLG for DEV		
0	6-30-92	SDH	JAR	ISSUED PER PCN S-92-1-8162.	CAB	CCM for WRH	AH	DML

Southern Company Services, Inc. for B13-REACTOR COOLANT & E11-RHR SYSTEM

ALABAMA POWER COMPANY
JOSEPH M. FARLEY NUCLEAR PLANT
UNIT 1

SCS DRAWING NUMBER	SHEET	REV.
A-351192	17	1

CAD AUTOCAD ALA14101 JLB-03

Farley Nuclear Plant
Support Examination Record VT-3

SHARED

FNP-0-NDE-100.23
Southern Nuclear Operating Company

Plant/ Unit	System/Support No	WO/WA/STP	Sheet No.
Farley / 1	ALA1-4101-RHR-R98	N/A	S01F1V041

Hanger Type	Type Exam/Technique	Procedure/Version	Exam Date
ONE DIRECTIONAL RESTRAINT W/ATTACH	VT-3 / Direct	FNP-0-NDE-100.23 / 5.0 / N/A	10/11/01

Examiner Signature	Level	Resolution	Tools
James F. Halley J. F. Halley	III	1/32" Division (Scale) ☑	FLASHLIGHT
John W. Bell John W Bell	III	1/32" Line (Gray Card) ☑	

EXAMINATION LIST:

	Acceptable/ Unacceptable/ NA
Deformation or structural degradation of fasteners, springs, clamps, or other support items.	Acceptable
Missing, detached, or loosened support items.	Acceptable
Arc strikes, weld spatter, paint scoring, roughness, or general corrosion on close tolerance machined or sliding surfaces or on the wire trands of Wear devices.	N/A
Any crack or linear indication.	Acceptable
Fluid loss or lack of fluid indication (hydraulic snubber only).	N/A
Other conditions	N/A
Spring Can Hot and Cold Positions (draw sketch)	Time of Exam N/A — N/A
Constant Spring Hanger (Sketch setting of pointer and setting location of the hot (red) and cold (white) stickers)	
Identification Plate Calibrated Load Setting	N/A

Sketch (if applicable)

Comments:

N/A

NDE Level II/III Review	Date:	ANII Review	Date:
Darryl A. Griffin III	10-13-01	E G Ward	10/13/01

Version 5.0

Farley Nuclear Plant
Liquid Penetrant Examination Record

SHARED

FNP-0-NDE-100.5
PT-F-FORM 001
Southern Nuclear Operating Company

Unit	Component Number	Procedure/Rev./TCN	Sheet No.
1	ALA1-4101-RHR-R98 (W2)	FNP-0-NDE-100.5 / 6.0 / N/A	S01F1P004 Page 1 of 1

Thermometer

Mfg/Ser. No. PTC / 43619
Cal. Due Date 02/25/02
Surface Temp. 86 o F

Manufacturer Magnaflux

Penetrant Materials

	Type	Batch
Cleaner / Remover	SKC-S	99J01K
Penetrant	SKL-SP	96J02K
Developer	SKD-S2	98D11K

Component Configuration
WELDED ATTACHMENT

% of Length Coverage 100%
% of Area Coverage 100%
Date 10/12/01

Ind. No.	Results	Dwell Time	Indication Desc. / Exam Limitations / etc.	Remarks
N/A	NRI	12	N/A	N/A

Primary Examiner	ASNT Level	Initials	Assistant Examiner	ASNT Level	Initials	Non-Technical Review	Date
James F. Halley	III	JFH	John W. Bell	II	JWB	Lynda Anke	10-17-01

SNC NDE Level II/III Review		Date	Percentage of Code Coverage	ANII Review	Date
[illegible]	III	10-17-01	100	[illegible]	10/18/01

Revision 6.

EXAMINATION SUMMARY
FOR UNIT 1
INTERVAL 3 PERIOD 2 OUTAGE 1

DRAWING ALA1-4205
4" SPRAY LINE-COLD LEG LOOP 2

ITEM NO	VOLUMERIC			SURFACE			VISUAL			REMARKS
	NI	NRI	RI	NI	NRI	RI	NI	NRI	RI	
35DM		X			X					

CONTAINMENT

4" SPRAY LINE (COLD LEG) LOOP 2

ALA1- 4205

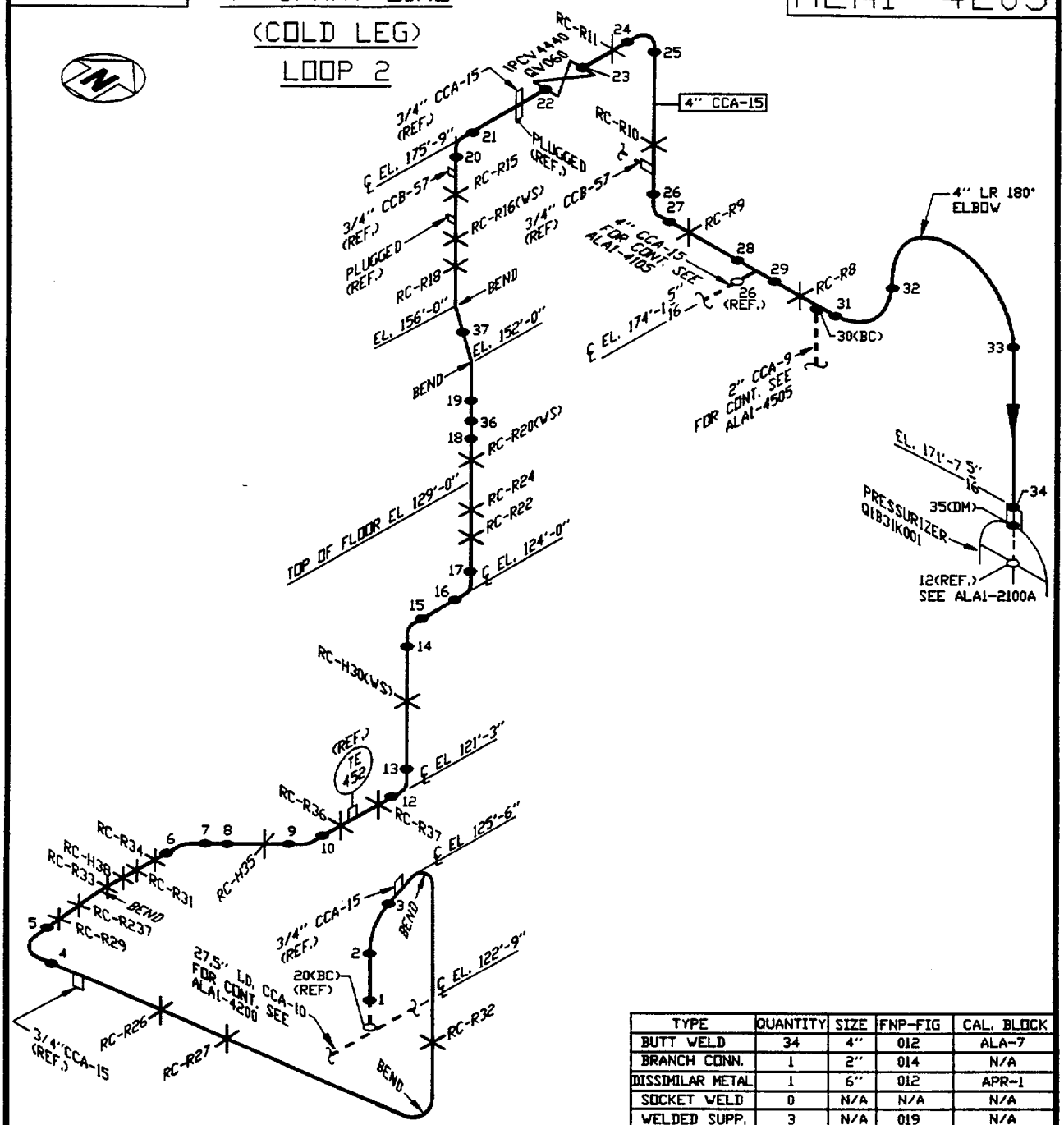

TYPE	QUANTITY	SIZE	FNP-FIG	CAL. BLOCK
BUTT WELD	34	4"	012	ALA-7
BRANCH CONN.	1	2"	014	N/A
DISSIMILAR METAL	1	6"	012	APR-1
SOCKET WELD	0	N/A	N/A	N/A
WELDED SUPP.	3	N/A	019	N/A
COMP. SUPPORT	23	N/A	037	N/A

LINE NUMBER: Q-1-B13-CCA-15

LINE SIZE: 4" CCA-15

BOUNDARY DIAGRAM: D-351114 SH. 1 & 2

REFERENCE ISO'S: D-514688 SH. 2 & 3

REV.	DATE	BY	CHK'D	DESCRIPTION	APPR.1	APPR.2	APPR.3	APPR.4
1	3-26-98	RAW	JAR	REVISED PER REA 96-1295, REV. 0	LDT	DLG DEW		
0	6-30-92	SDH	JAR	ISSUED PER PCN S-92-1-8162.	CAB	CCM for WRH	AH	DML

CAD ALA14205 RAV-02 AUTOCAD

Southern Company Services, Inc. for B13-REACTOR COOLANT

ALABAMA POWER COMPANY
JOSEPH M. FARLEY NUCLEAR PLANT
UNIT 1

SCS DRAWING NUMBER	SHEET	REV.
A-351192	34	1

SHAMED

Farley Nuclear Plant
Ultrasonic Calibration and Examination Record

FNP-0-NDE-100.31
Southern Nuclear Operating Company

Unit	Sketch/Component Number	Date	Sheet No.
1	ALA1-4205-35DM	10/13/01	S01F1U064 Page 1 of 1

Procedure/Rev./TCN	Couplant/Batch No.	ThermometerSN/Cal Due Date	Linearity Sheet No.
FNP-0-NDE-100.31 / 8.0 / N/A	Ultragel II / 01125	43619 2/25/02	S01F1L001

Instrument

Instrument	Staveley / SONIC 136	
Serial No.	136-911K	
	Axial dB	Circ dB
Reference	70.6	76
Scanning	76.6	82
Reject	OFF	
Frequency	2.25	
Mode	DUAL	
Damping	500 OHMS	

Search Unit

Transducer Mfg.	RTD
Serial Number	99-822
Model No.	45° TRL 2-Aust
Size / No.	2(8x14) Shape Rect.
Frequency/Mode	2.0 / Long
"A" Dimension	.44"
Nom Angle	45°
Meas Angle	45°
Cable Type / No. Conn.	RG174 /1
Cable Length	16'

Calibration Block

Cal. Blk. No.	APR-1
Thickness	0.719
Cal. Temp	73 °F
Cal. In	11:45
Cal. Chk.	1359
Cal. Out	15:33
Ref. Blk. No.	801101
Reflector/dB	1"RAD/47
Amp/Sweep	80 % / 7.4

Axial Scan Calibration				Circ Scan Calibration			
Cal. Refl.	Signal Amp.	Sweep Div.	Wmax	Cal. Refl.	Signal Amp.	Sweep Div.	Wmax
1T	80%	8.0	.72	1T	80%	9.0	1.1
1/2TSDH	100+	4.0	NA	1/2TSDH	100+	4.2	N/A

Calibration Remarks:
N/A

Comp Temp.	Configuration -	Wo Loc.	Lo Loc.
86 °F	SAFE END TO PZR NOZZLE	WELD C/L	*

Scan Dir.	Results NI	Results NRI	Results RI	Ind No.	% DAC	Length L1	Length Lmax	Length L2	Reference Measurement W1	Reference Measurement Wmax	Reference Measurement W2	Sweep Position S1	Sweep Position Smax	Sweep Position S2	Thickness 1"<--	Thickness C/L	Thickness -->1"	Notes:
8	○	◉	○															
7	○	◉	○															
5	○	◉	○															
2	○	◉	○															

Examination/Limitation Remarks: See previous Data for Scan Limitations 80% Examined
*OUTSIDE RADIUS OF ABOVE ELBOW

Total Length of Weld	Crown Width	Total Length of Weld Examined	Extent of Perpendicular Scans (W)	Extent of Parallel Scans (L)
21"	.7"	5 (L) NL 2 (L) NL 7 and 8 (W) NL	5- From 0 to 1" 2- From 0 to 1.35"	From (5) NL to (2) NL

Primary Examiner	Level	Initials	Assistant Examiner	Level	Initials	Non-Technical Review	Date
James F. Halley	III	JFH	N/A	N/A		Lynda Duke	10-17-01

SNC NDE Level II/III Review		Date	Percentage of Code Coverage	ANII Review	Date
Gary A. Lofftus	III	10-18-01	81% composite	[illegible]	10/18/01

Revision 8.0

SHARED

Farley Nuclear Plant
Ultrasonic Calibration and Examination Record

FNP-0-NDE-100.31
Southern Nuclear Operating Company

Unit	Sketch/Component Number	Date	Sheet No.
1	ALA1-4205-35DM	10/13/01	S01F1U065 Page 1 of 1

Procedure/Rev./TCN	Couplant/Batch No.	ThermometerSN/Cal Due Date	Linearity Sheet No.
FNP-0-NDE-100.31 / 8.0 / N/A	Ultragel II / 01125	43619 2/25/02	S01F1L001

Instrument

	Axial dB	Circ dB
Instrument	Staveley / SONIC 136	
Serial No.	136-911K	
Reference	79	79
Scanning	85	85
Reject	OFF	
Frequency	2.25	
Mode	DUAL	
Damping	500 OHMS	

Search Unit

Transducer Mfg.	RTD
Serial Number	01-985
Model No.	60° TRL 2 - Aust
Size / No.	2(8x14) Shape Rect.
Frequency/Mode	2.0 / Long
"A" Dimension	.4"
Nom Angle	60° °
Meas Angle	60 °
Cable Type / No. Conn.	RG174 / 1
Cable Length	16'

Calibration Block

Cal. Blk. No.	APR-1
Thickness	0.719
Cal. Temp	73 °F
Cal. In	11:22
Cal. Chk.	1404
Cal. Out	15:33
Ref. Blk. No.	801101
Reflector/dB	1"RAD / 52
Amp/Sweep	90 % / 5.3

Axial Scan Calibration				Circ Scan Calibration			
Cal. Refl.	Signal Amp.	Sweep Div.	Wmax	Cal. Refl.	Signal Amp.	Sweep Div.	Wmax
1T	80%	8.0	1.2	1T	80%	7.8	1.25
1/2TSDH	80%	4.0	NA	1/2TSDH	80	4.0	NA

Calibration Remarks:
N/A

Comp Temp.	Configuration -	Wo Loc.	Lo Loc.
86 °F	SAFE END TO PZR NOZZLE	WELD C/L	*

Scan Dir.	Results NI	Results NRI	Results RI	Ind No.	% DAC	Length L1	Length Lmax	Length L2	Reference Measurement W1	Reference Measurement Wmax	Reference Measurement W2	Sweep Position S1	Sweep Position Smax	Sweep Position S2	Thickness 1"<--	Thickness C/L	Thickness -->1"	Notes:
8	○	◉	○															
7	○	◉	○															
5	○	◉	○															
2	○	◉	○															

Examination/Limitation Remarks: See Previous Data for Scan Limitations 70% Examined.
*OUTSIDE RADIUS OF ABOVE ELBOW

Total Length of Weld	Crown Width	Total Length of Weld Examined	Extent of Perpendicular Scans (W)	Extent of Parallel Scans (L)
21"	.7"	5 (L) NL 2 (L) NL 7 and 8 (W) NL	5- From 0 to 1" 2- From 0 to 1.3"	From (5) NL to (2) NL

Primary Examiner	Level	Initials	Assistant Examiner	Level	Initials	Non-Technical Review	Date
James F. Halley	III	JFH	N/ A	N/A		Lynda Auke	10-17-01

SNC NDE Level II/III Review		Date	Percentage of Code Coverage	ANII Review	Date
[signature]	III	10-18-01	81% composite	[signature]	10/18/01

Revision 8.0

SHARED

Farley Nuclear Plant
Ultrasonic Calibration and Examination Record

FNP-0-NDE-100.31
Southern Nuclear Operating Company

Unit	Sketch/Component Number	Date	Sheet No.
1	ALA1-4205-35DM	10/13/01	S01F1U066 Page 1 of 2

Procedure/Rev./TCN	Couplant/Batch No.	ThermometerSN/Cal Due Date	Linearity Sheet No.
FNP-0-NDE-100.31 / 8.0 / N/A	Ultragel II / 01125	43619 2/25/02	S01F1L001

Instrument

Instrument	Staveley / SONIC 136	
Serial No.	136-911K	
	Axial dB	Circ dB
Reference	34	41.2
Scanning	46	53.2
Reject	OFF	
Frequency	2.25	
Mode	P/E	
Damping	500 OHMS	

Search Unit

Transducer Mfg.	KBA
Serial Number	00LCPD
Model No.	113-222-591
Size / No.	.25" Shape Round
Frequency/Mode	2.25 / Shear
"A" Dimension	.3"
Nom Angle	45 °
Meas Angle	45 °
Cable Type / No. Conn.	RG174 / 0
Cable Length	10'

Calibration Block

Cal. Blk. No.	APR-1
Thickness	0.719
Cal. Temp	73 °F
Cal. In	11:00
Cal. Chk.	1409
Cal. Out	15:33
Ref. Blk. No.	801101
Reflector/dB	SDH / 34
Amp/Sweep	20 % / 3

Axial Scan Calibration				Circ Scan Calibration			
Cal. Refl.	Signal Amp.	Sweep Div.	Wmax	Cal. Refl.	Signal Amp.	Sweep Div.	Wmax
1T	80%	3.0	.719	1T	80%	3.0	1.1
2T	40%	6.0	1.42	2T	50%	6.4	1.7
3T	25%	9.0	2.15	N/A			

Calibration Remarks:
N/A

Comp Temp.	Configuration -	Wo Loc.	Lo Loc.
86 °F	SAFE END TO PZR NOZZLE	WELD C/L	*

Scan Dir.	Results NI	Results NRI	Results RI	Ind No.	% DAC	Length L1	Length Lmax	Length L2	Reference Measurement W1	Reference Measurement Wmax	Reference Measurement W2	Sweep Position S1	Sweep Position Smax	Sweep Position S2	Thickness 1"<--	Thickness C/L	Thickness -->1"	Notes:
8	○	◉	○															
7	○	◉	○															
5	○	◉	○															
2	○	◉	○															

Examination/Limitation Remarks: See Previous Data for Weld Profile 100% Examined.
*OUTSIDE RADIUS OF ABOVE ELBOW

Total Length of Weld	Crown Width	Total Length of Weld Examined	Extent of Perpendicular Scans (W)	Extent of Parallel Scans (L)
21"	.7"	5 (L) NL 2 (L) NL 7 and 8 (W) NL	5- From NL to NL 2- From NL to NL	From (5) NL to (2) NL

Primary Examiner	Level	Initials	Assistant Examiner	Level	Initials	Non-Technical Review	Date
James F. Halley	III	JFH	N/ A	N/A		Lynda Anke	10-17-01

SNC NDE Level II/III Review		Date	Percentage of Code Coverage	ANII Review	Date
Larry H. Lofties	III	10-18-01	81 %	[illegible]	10/18/01

Revision 8.0

S01F1066 2 of 2

WESTINGHOUSE NUCLEAR SERVICE DIVISION
INSPECTION SERVICES

LIMITATION TO EXAMINATION

PLANT J. M. FARLEY UNIT No. 1 SKETCH ALA1-4205

SYST/COMP 4" SPRAY LINE LOOP 2 PROCEDURE FNP-0-NDE-157.12 FNP-ISI-206, REV. 5

EXAMINER James R. Dillusa LEVEL II DATE 3-25-94

RELATED TO: U/T X P/T ____ M/T ____ V/T ____ ITEM(S): 35 (DM)

PROVIDE GENERAL INFORMATION TO DESCRIBE APPROXIMATE SIZE, LOCATION AND TYPE OF LIMITATION.

WELD PROFILE ILLUSTRATIVE ONLY

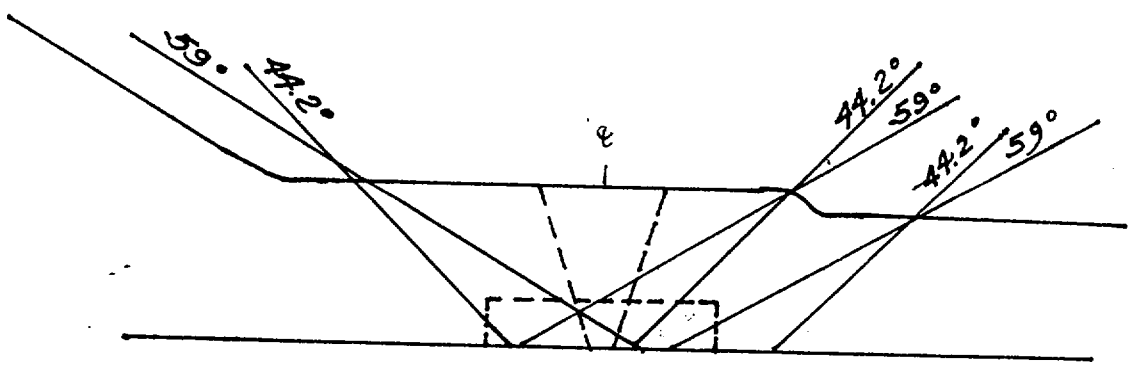

ALL BEAM ANGLES AND WELD VOLUME COVERAGE ESTIMATED

FARLEY REVIEW Stacy L. Freeland ANII P C Ward 4/2/94

Farley Nuclear Plant
Liquid Penetrant Examination Record

SHARED

FNP-0-NDE-100.5
PT-F-FORM 001
Southern Nuclear Operating Company

Unit	Component Number	Procedure/Rev./TCN	Sheet No.
1	ALA1-4205-35DM	FNP-0-NDE-100.5 / 6.0 / N/A	S01F1P003 Page of

Thermometer

Mfg/Ser. No. PTC / 43619
Cal. Due Date 02/25/02

Surface Temp. 86 o F

Manufacturer Magnaflux

Penetrant Materials

	Type	Batch
Cleaner / Remover	SKC-S	99J01K
Penetrant	SKL-SP	96J02K
Developer	SKD-S2	98D11K

Component Configuration
SAFE END TO PZR NOZZLE

% of Length Coverage 100&
% of Area Coverage 100%

Date 10/12/01

Ind. No.	Results	Dwell Time	Indication Desc. / Exam Limitations / etc.	Remarks
N/A	NRI	15	N/A	N/A

Primary Examiner	ASNT Level	Initials	Assistant Examiner	ASNT Level	Initials	Non-Technical Review	Date
James F. Halley	III	JFH	John W. Bell	II	JWB	Lynda Duke	10-17-01

SNC NDE Level II/III Review		Date	Percentage of Code Coverage	ANII Review	Date
Gary A. Loftus	III	10-17-01	100	[illegible]	10/18/01

Revision 6.

EXAMINATION SUMMARY
FOR UNIT 1
INTERVAL 3 PERIOD 2 OUTAGE 1

DRAWING ALA1-4305
6" SAFETY INJECTION SYSTEM-HOT LEG LOOP 3

ITEM NO	VOLUMERIC			SURFACE			VISUAL			REMARKS
	NI	NRI	RI	NI	NRI	RI	NI	NRI	RI	
SI-R266							X			

CONTAINMENT

6" SAFETY INJECTION SYSTEM (HOT LEG) LOOP 3

ALA1- 4305

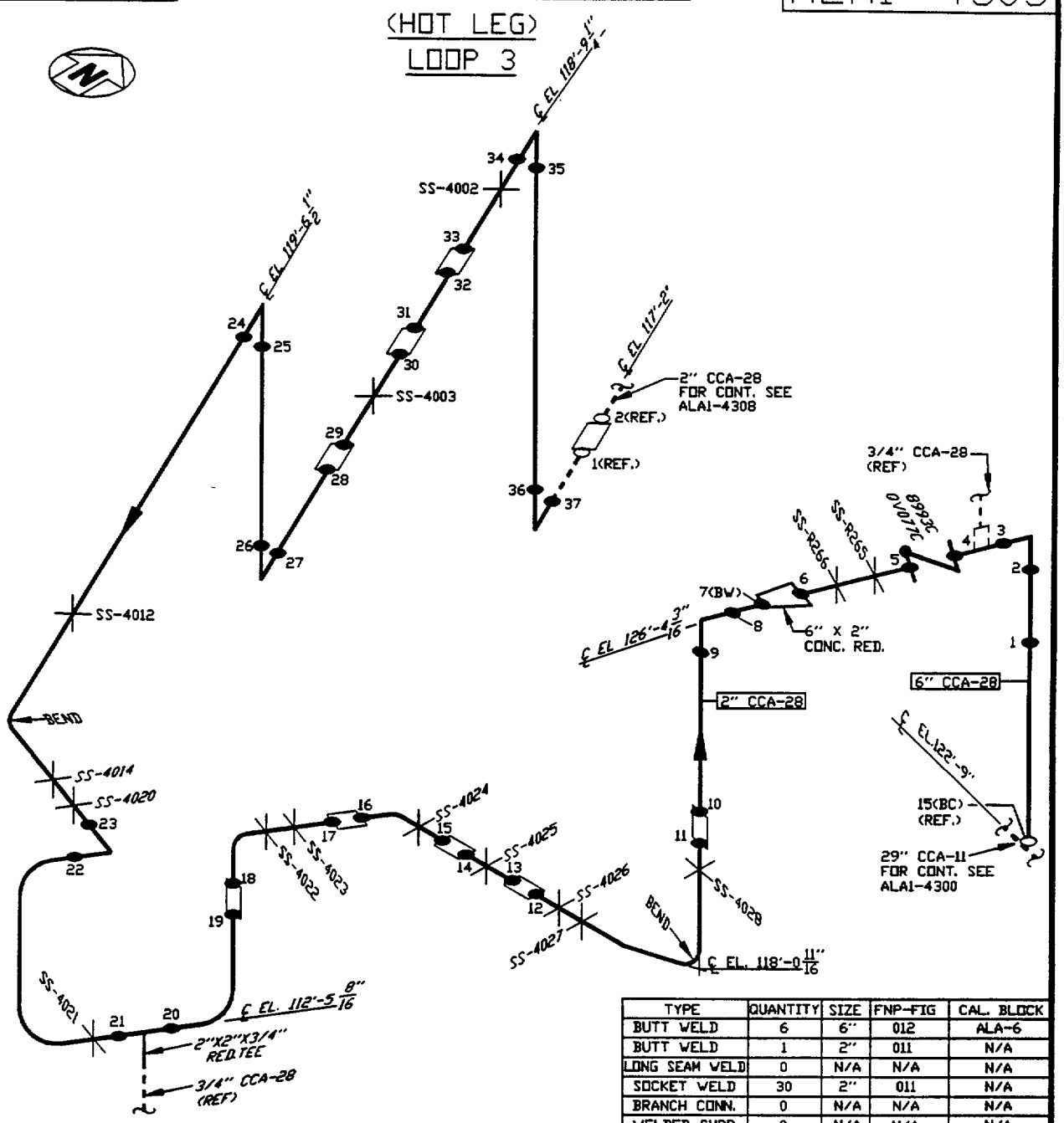

TYPE	QUANTITY	SIZE	FNP-FIG	CAL. BLOCK
BUTT WELD	6	6"	012	ALA-6
BUTT WELD	1	2"	011	N/A
LONG SEAM WELD	0	N/A	N/A	N/A
SOCKET WELD	30	2"	011	N/A
BRANCH CONN.	0	N/A	N/A	N/A
WELDED SUPP.	0	N/A	N/A	N/A
COMP. SUPPORT	15	N/A	037	N/A

VALVE BOLTING (SEE ALA1-6300 SH. 1)

LINE NUMBER: Q-1-E21-CCA-28

LINE SIZE: 6" CCA-28; 2" CCA-28

BOUNDARY DIAGRAM: D-351115 SH. 1

REFERENCE ISO'S: D-514687 SH. 2; D-514715 SH. 1; D-514988 SH. 1; D-514985 SH. 1

REV.	DATE	BY	CHK'D	DESCRIPTION	APPR.1	APPR.2	APPR.3	APPR.4
1	3-26-98	RAW	JAR	REVISED PER REA 96-1295, REV. 0	LDT	DLG DEV CCM for WRH		
0	6-30-92	SDH	JAR	ISSUED PER PCN S-92-1-8162.	CAB		AH	DML

CAD AUTOCAD ALA14305 RAV-02

Southern Company Services, Inc. for E21-SAFETY INJECTION SYSTEM

ALABAMA POWER COMPANY
JOSEPH M. FARLEY NUCLEAR PLANT
UNIT 1

SCS DRAWING NUMBER	SHEET	REV.
A-351192	47	1

Farley Nuclear Plant
Support Examination Record VT-3

SHARED

FNP-0-NDE-100.23
Southern Nuclear Operating Company

Plant/ Unit	System/Support No	WO/WA/STP	Sheet No.
Farley / 1	ALA1-4305-SI-R266	N/A	S01F1V043

Hanger Type	Type Exam/Technique	Procedure/Version	Exam Date
HYDRAULIC SNUBBER	VT-3 / Direct	FNP-0-NDE-100.23 / 5.0 / N/A	10/11/01

Examiner Signature	Level	Resolution	Tools
James F. Halley	III	1/32" Division (Scale) ☐	FLASHLIGHT, MIRROR
George Morini	II	1/32" Line (Gray Card) ☑	

EXAMINATION LIST:

	Acceptable/ Unacceptable/ NA
Deformation or structural degradation of fasteners, springs, clamps, or other support items.	Acceptable
Missing, detached, or loosened support items.	Acceptable
Arc strikes, weld spatter, paint scoring, roughness, or general corrosion on close tolerance machined or sliding surfaces or on the wire trands of Wear devices.	Acceptable
Any crack or linear indication.	Acceptable
Fluid loss or lack of fluid indication (hydraulic snubber only).	Acceptable
Other conditions	Acceptable

Spring Can Hot and Cold Positions (draw sketch) — Time of Exam N/A — N/A

Constant Spring Hanger
(Sketch setting of pointer and setting location of the hot (red) and cold (white) stickers)

Identification Plate Calibrated Load Setting N/A

Comments:

N/A

Sketch (if applicable)

NDE Level II/III Review	Date:	ANII Review	Date:
Gary A. Lofton III	10-13-01	C G Wood	10/13/01

Version 5.0

EXAMINATION SUMMARY
FOR UNIT 1
INTERVAL 3 PERIOD 2 OUTAGE 1

DRAWING ALA1-4502
6" PRESSURIZER SAFETY LINES

ITEM NO	VOLUMERIC			SURFACE			VISUAL			REMARKS
	NI	NRI	RI	NI	NRI	RI	NI	NRI	RI	
1DM		X			X					

CONTAINMENT

PRSRZR. NOZ TO VESSEL WELDS
6" PRESSURIZER SAFETY LINES

ALA1-4502

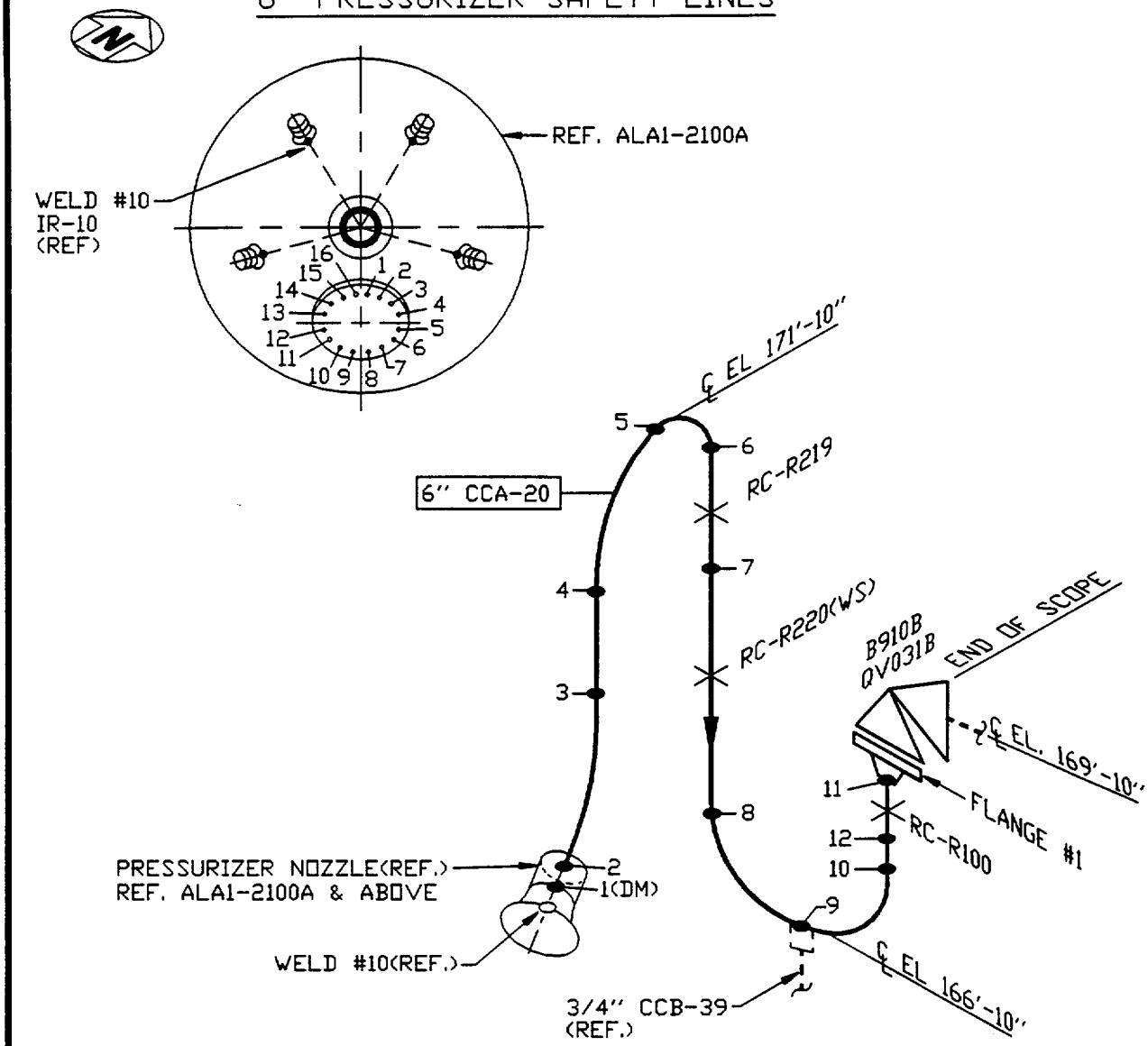

TYPE	QUANTITY	SIZE	FNP-FIG	CAL. BLOCK
BUTT WELD	11	6"	012	ALA-6
DISSIMILAR METAL WELD	1	8"	012	ALA-5
SOCKET WELD	0	N/A	N/A	N/A
BRANCH CONN.	0	N/A	N/A	N/A
WELDED SUPP.	1	N/A	019	N/A
COMP. SUPPORT	3	N/A	037	N/A

FLANGE BOLTING (SEE ALA1-4700)
VALVE BOLTING (SEE ALA1-6300 SH. 1)

LINE NUMBER: Q-1-B13-CCA-20

LINE SIZE: 6" CCA-20

BOUNDARY DIAGRAM	D-351114 SH. 2
REFERENCE ISO'S	D-514652 SH. 3

REV.	DATE	BY	CHK'D	DESCRIPTION	APPR.1	APPR.2	APPR.3	APPR.4
1	3-26-98	RAW	JAR	REVISED PER REA 96-1295, REV. 0	LDT	DLG PR DEV		
0	6-30-92	SDH	JAR	ISSUED PER PCN S-92-1-8162.	CAB	CCM for WRH	AH	DML

CAD AUTOCAD ALA14502 RAV-02

Southern Company Services, Inc. for B13 - REACTOR COOLANT

ALABAMA POWER COMPANY
JOSEPH M. FARLEY NUCLEAR PLANT
UNIT 1

SCS DRAWING NUMBER	SHEET	REV.
A-351192	57	1

SHARED

Farley Nuclear Plant
Ultrasonic Calibration and Examination Record

FNP-0-NDE-100.31
Southern Nuclear Operating Company

Unit	Sketch/Component Number	Date	Sheet No.
1	ALA1-4502-1DM	10/13/01	S01F1U060 Page 1 of 1

Procedure/Rev./TCN	Couplant/Batch No.	ThermometerSN/Cal Due Date	Linearity Sheet No.
FNP-0-NDE-100.31 / 8.0 / N/A	Ultragel II / 01125	43619 2/25/02	S01F1L001

Instrument

	Axial dB	Circ dB
Instrument	Staveley / SONIC 136	
Serial No.	136-911K	
Reference	35	43.6
Scanning	57	57.6
Reject	OFF	
Frequency	2.25	
Mode	P/E	
Damping	500 OHMS	

Search Unit

Transducer Mfg.	KBA
Serial Number	00LCPD
Model No.	113-222-591
Size / No.	.25" Shape Round
Frequency/Mode	2.25 / Shear
"A" Dimension	.3"
Nom Angle	45°
Meas Angle	45 °
Cable Type / No. Conn.	RG174 / 0
Cable Length	10'

Calibration Block

Cal. Blk. No.	ALA-5
Thickness	0.906
Cal. Temp	73 °F
Cal. In	11:10
Cal. Chk.	1440
Cal. Out	15:30
Ref. Blk. No.	801101
Reflector/dB	HOLE/35
Amp/Sweep	20 % / 2.6

Axial Scan Calibration

Cal. Refl.	Signal Amp.	Sweep Div.	Wmax
1T	80%	3	.85
2T	30%	6	1.7
3T	25%	9	2.6

Circ Scan Calibration

Cal. Refl.	Signal Amp.	Sweep Div.	Wmax
1T	80%	3	.9
2T	30%	6.2	2.1
N/A			

Calibration Remarks:
N/A

Comp Temp.	Configuration -	Wo Loc.	Lo Loc.
86 °F	PZR NOZZLE TO SAFE END	WELD C/L	*

Scan Dir.	Results NI	Results NRI	Results RI	Ind No.	% DAC	Length L1	Length Lmax	Length L2	Reference Measurement W1	Reference Measurement Wmax	Reference Measurement W2	Sweep Position S1	Sweep Position Smax	Sweep Position S2	Thickness 1"<--	Thickness C/L	Thickness -->1"	Notes:
8	○	◉	○															
7	○	◉	○															
5	○	◉	○															
2	○	◉	○															

Examination/Limitation Remarks: *OUTSIDE RADIUS OF ABOVE ELBOW

Total Length of Weld	Crown Width	Total Length of Weld Examined	Extent of Perpendicular Scans (W)	Extent of Parallel Scans (L)
26.75"	.7"	5 (L) NL 2 (L) NL 7 and 8 (W) NL	5- From NL to NL 2- From NL to NL	From (5) NL to (2) NL

Primary Examiner	Level	Initials	Assistant Examiner	Level	Initials	Non-Technical Review	Date
James F. Halley	III	JFH	N/ A	N/A		J Eric Chyrek	10-18-01

SNC NDE Level II/III Review		Date	Percentage of Code Coverage	ANII Review	Date
David L. Lotter	III	10-18-01	81% composite	CG Wood	10/18/01

Revision 8.0

SHARED

Farley Nuclear Plant
Ultrasonic Calibration and Examination Record

FNP-0-NDE-100.31
Southern Nuclear Operating Company

Unit	Sketch/Component Number	Date	Sheet No.
1	ALA1-4502-1DM	10/13/01	S01F1U062 Page 1 of 1

Procedure/Rev./TCN	Couplant/Batch No.	ThermometerSN/Cal Due Date	Linearity Sheet No.
FNP-0-NDE-100.31 / 8.0 / N/A	Ultragel II / 01125	43619 2/25/02	S01F1L001

Instrument

	Axial dB	Circ dB
Instrument	Staveley / SONIC 136	
Serial No.	136-911K	
Reference	76	76
Scanning	82	82
Reject	OFF	
Frequency	2.25	
Mode	DUAL	
Damping	500 OHMS	

Search Unit

Transducer Mfg.	RTD
Serial Number	01-985
Model No.	60° TRL 2 - Aust
Size / No.	2(8x14) Shape Rect.
Frequency/Mode	2.0 / Long
"A" Dimension	.4"
Nom Angle	60°
Meas Angle	60°
Cable Type / No. Conn.	RG174 / 1
Cable Length	16'

Calibration Block

Cal. Blk. No.	ALA-5
Thickness	0.906
Cal. Temp	73 °F
Cal. In	11:35
Cal. Chk.	1450
Cal. Out	15:33
Ref. Blk. No.	801101
Reflector/dB	1"RAD/52
Amp/Sweep	90 % / 53

Axial Scan Calibration

Cal. Refl.	Signal Amp.	Sweep Div.	Wmax
1/4TSDH	60%	2	.4
3/4TSDH	80%	6	.95
1T	80%	8	1.45

Circ Scan Calibration

Cal. Refl.	Signal Amp.	Sweep Div.	Wmax
1T	80%	8	1.7
N/A			
N/A			

Calibration Remarks:
N/A

Comp Temp.	Configuration -	Wo Loc.	Lo Loc.
86 °F	PZR NOZZLE TO SAFE END	WELD C/L	*

Scan Dir.	Results NI	Results NRI	Results RI	Ind No.	% DAC	Length L1	Length Lmax	Length L2	Reference Measurement W1	Reference Measurement Wmax	Reference Measurement W2	Sweep Position S1	Sweep Position Smax	Sweep Position S2	Thickness 1"<--	Thickness C/L	Thickness -->1"	Notes:
8	○	◉	○															
7	○	◉	○															
5	○	◉	○															
2	○	◉	○															

Examination/Limitation Remarks: See Previous Data (3-18-94) for Limitation Sketch 59% Examined
*OUTSIDE RADIUS OF ABOVE ELBOW

Total Length of Weld	Crown Width	Total Length of Weld Examined	Extent of Perpendicular Scans (W)	Extent of Parallel Scans (L)
26.75"	.7"	5 (L) NL 2 (L) NL 7 and 8 (W) NL	5- From 0 to 1.3" 2- From 0 to 1"	From (5) NL to (2) NL

Primary Examiner	Level	Initials	Assistant Examiner	Level	Initials	Non-Technical Review	Date
James F. Halley	III	JFH	N/ A	N/A		J. Eric Clycock	10-18-01

SNC NDE Level II/III Review		Date	Percentage of Code Coverage	ANII Review	Date
Jerry L. Loftus	III	10-18-01	81% composite	CG Ward	10/18/01

Revision 8.0

SHAIED

Farley Nuclear Plant
Ultrasonic Calibration and Examination Record

FNP-0-NDE-100.31
Southern Nuclear Operating Company

Unit	Sketch/Component Number	Date	Sheet No.
1	ALA1-4502-1DM	10/13/01	S01F1U063 Page 1 of 2

Procedure/Rev./TCN	Couplant/Batch No.	ThermometerSN/Cal Due Date	Linearity Sheet No.
FNP-0-NDE-100.31 / 8.0 / N/A	Ultragel II / 01125	43619 2/25/02	S01F1L001

Instrument

	Axial dB	Circ dB
Instrument	Staveley / SONIC 136	
Serial No.	136-911K	
Reference	74	74
Scanning	80	80
Reject	OFF	
Frequency	2.25	
Mode	DUAL	
Damping	500 OHMS	

Search Unit

Transducer Mfg.	RTD
Serial Number	99-822
Model No.	45° TRL 2-Aust
Size / No.	2(8x14) Shape Rect.
Frequency/Mode	2.0 / Long
"A" Dimension	.44
Nom Angle	45
Meas Angle	45°
Cable Type / No. Conn.	RG174 / 1
Cable Length	16'

Calibration Block

Cal. Blk. No.	ALA-5
Thickness	0.906
Cal. Temp	73 °F
Cal. In	12:00
Cal. Chk.	1500
Cal. Out	15:36
Ref. Blk. No.	801101
Reflector/dB	1"RAD/47
Amp/Sweep	80 % / 6.5

Axial Scan Calibration

Cal. Refl.	Signal Amp.	Sweep Div.	Wmax
1/4SDH	40%	2	.3
3/4SDH	80%	6	.6
1T	80%	8	.85

Circ Scan Calibration

Cal. Refl.	Signal Amp.	Sweep Div.	Wmax
1T	80%	9.0	1.25
N/A			
N/A			

Calibration Remarks:
N/A

Comp Temp.	Configuration -	Wo Loc.	Lo Loc.
86 °F	PZR NOZZLE TO SAFE END	WELD C/L	*

Scan Dir.	Results NI	Results NRI	Results RI	Ind No.	% DAC	Length L1	Length Lmax	Length L2	Reference Measurement W1	Reference Measurement Wmax	Reference Measurement W2	Sweep Position S1	Sweep Position Smax	Sweep Position S2	Thickness 1"<--	Thickness C/L	Thickness -->1"	Notes:
8	○	◉	○															
7	○	◉	○															
5	○	◉	○															
2	○	◉	○															

Examination/Limitation Remarks: See Previous Data 3-18-94 for Exam Limitations 75% examined.
*OUTSIDE RADIUS OF ABOVE ELBOW

Total Length of Weld	Crown Width	Total Length of Weld Examined	Extent of Perpendicular Scans (W)	Extent of Parallel Scans (L)
26.75"	.7"	5 (L) NL 2 (L) NL 7 and 8 (W) NL	5- From 0 to 1.3" 2- From 0 to .1"	From (5) NL to (2) NL

Primary Examiner	Level	Initials	Assistant Examiner	Level	Initials	Non-Technical Review	Date
James F. Halley	III	JFH	N/A	N/A		J. Eric Clayock	10-18-01

SNC NDE Level II/III Review		Date	Percentage of Code Coverage	ANII Review	Date
Darryl Lattus	III	10-18-01	81% Composite	CGWard	10/18/01

Revision 8.0

2 of 2

501F14063

WESTINGHOUSE NUCLEAR SERVICE DIVISION
INSPECTION SERVICES

LIMITATION TO EXAMINATION

PLANT J.M. FARLEY UNIT 1 SKETCH ALAI-4502

SYST/COMP PRSRZR. NOZ TO VESSEL WELDS 6" PRESSURIZER SAFETY LINES PROCEDURE FNP-O-NDE-157.12 FNP-ISI-206, REV. 5

EXAMINER [signature] LEVEL II DATE 3-18-94

RELATED TO: U/T X P/T ____ M/T ____ V/T ____ ITEM(S): 1(Dm)

PROVIDE GENERAL INFORMATION TO DESCRIBE APPROXIMATE SIZE, LOCATION AND TYPE OF LIMITATION.

ILLUSTRATIVE ONLY

NOZZLE CONFIGURATION LIMITING 2 & 5 SCANS.

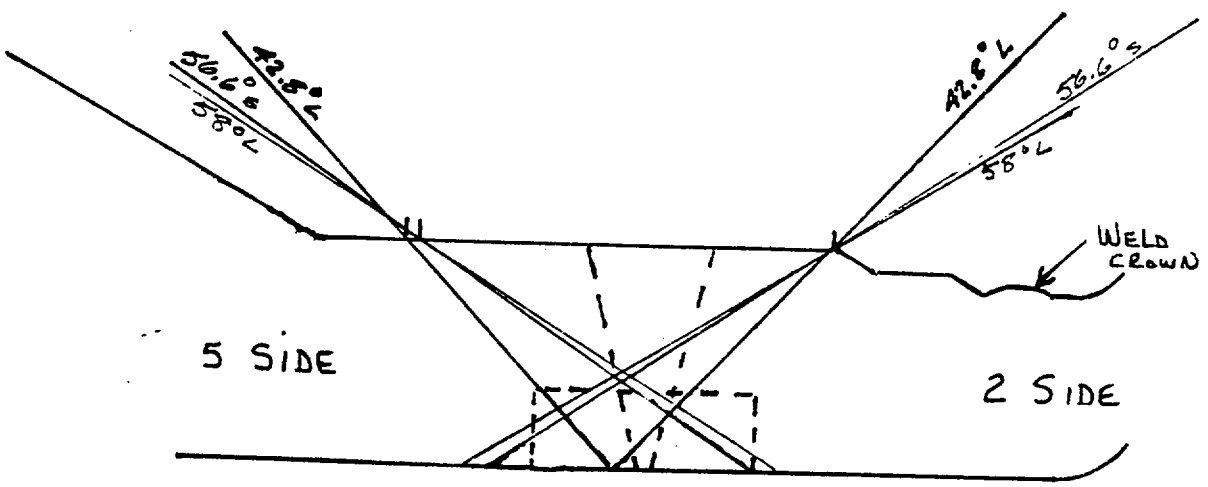

No LIMITATIONS 7 & 8 SCANS

FARLEY REVIEW [signature] ANII [signature] 4/6/94

[signature] III 10-18-01

Farley Nuclear Plant
Liquid Penetrant Examination Record

SHARED

FNP-0-NDE-100.5
PT-F-FORM 001
Southern Nuclear Operating Company

Unit	Component Number	Procedure/Rev./TCN	Sheet No.
1	ALA1-4502-1DM	FNP-0-NDE-100.5 / 6.0 / N/A	S01F1P002 Page 1 of 1

Thermometer

Mfg/Ser. No. PTC / 43619
Cal. Due Date 02/25/02

Surface Temp. 86 o F

Manufacturer Magnaflux

Penetrant Materials

	Type	Batch
Cleaner / Remover	SKC-S	99J01K
Penetrant	SKL-SP	96J02K
Developer	SKD-S2	98D11K

Component Configuration
PZR NOZZLE TO SAFE END

% of Length Coverage 100%
% of Area Coverage 100%

Date 10/12/01

Ind. No.	Results	Dwell Time	Indication Desc. / Exam Limitations / etc.	Remarks
N/A	NRI	15	NA	NA

Primary Examiner	ASNT Level	Initials	Assistant Examiner	ASNT Level	Initials	Non-Technical Review	Date
James F. Halley	III	JFH	John W. Bell	II	JWB	Lynda Duke	10-17-01

SNC NDE Level II/III Review		Date	Percentage of Code Coverage	ANII Review	Date
[signature]	III	10-17-01		[signature]	10/18/01

Revision 6.

EXAMINATION SUMMARY
FOR UNIT 1
INTERVAL 3 PERIOD 2 OUTAGE 1

DRAWING ALA1-4503
6" PRESSURIZER SAFETY LINES

ITEM NO	VOLUMERIC			SURFACE			VISUAL			REMARKS
	NI	NRI	RI	NI	NRI	RI	NI	NRI	RI	
1DM		X			X					

CONTAINMENT

PRSRZR. NOZ TO VESSEL WELDS
6" PRESSURIZER SAFETY LINES

ALA1-4503

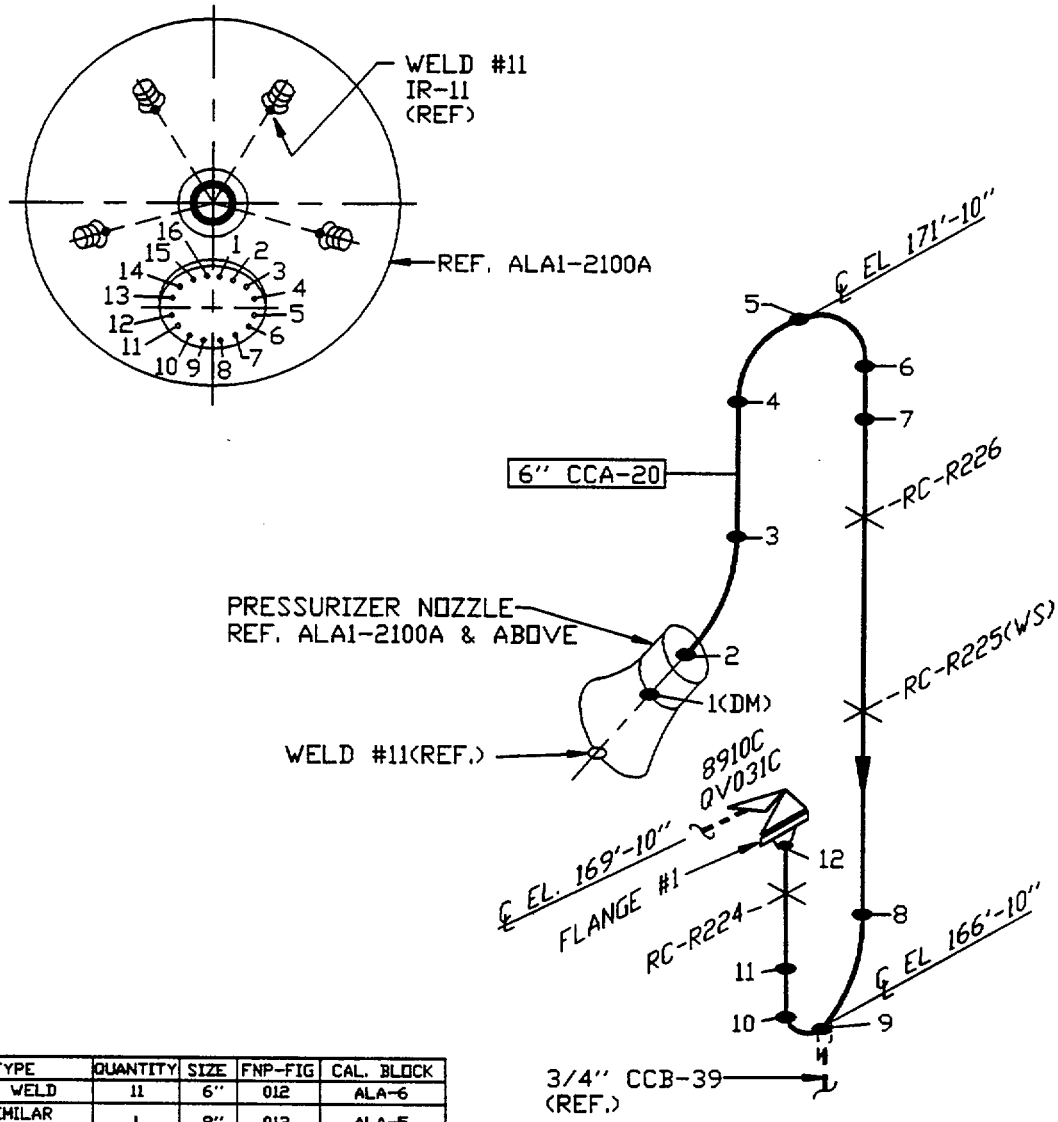

TYPE	QUANTITY	SIZE	FNP-FIG	CAL. BLOCK
BUTT WELD	11	6"	012	ALA-6
DISSIMILAR METAL WELD	1	8"	012	ALA-5
SOCKET WELD	0	N/A	N/A	N/A
BRANCH CONN.	0	N/A	N/A	N/A
WELDED SUPP.	1	N/A	019	N/A
COMP. SUPPORT	3	N/A	037	N/A

FLANGE BOLTING (SEE ALA1-4700)
VALVE BOLTING (SEE ALA1-6300 SH. 1)

LINE NUMBER: Q-1-B13-CCA-20

LINE SIZE: 6" CCA-20

BOUNDARY DIAGRAM	D-351114 SH. 2
REFERENCE ISO'S	D-514652 SH. 3

REV.	DATE	BY	CHK'D	DESCRIPTION	APPR.1	APPR.2	APPR.3	APPR.4
1	3-26-98	RAW	JAR	REVISED PER REA 96-1295, REV. 0	LDT	DLG for DEW		
0	6-30-92	SDH	JAR	ISSUED PER PCN S-92-1-8162.	CAB	CCM for WRH	AH	DML

Southern Company Services, Inc. for

ALABAMA POWER COMPANY
JOSEPH M. FARLEY NUCLEAR PLANT
UNIT 1

B13 - REACTOR COOLANT

SCS DRAWING NUMBER	SHEET	REV.
A-351192	58	1

CAD ALA14503 RAV-02
AUTOCAD

SHARED

Farley Nuclear Plant
Ultrasonic Calibration and Examination Record

FNP-0-NDE-100.31
Southern Nuclear Operating Company

Unit	Sketch/Component Number	Date	Sheet No.
1	ALA1-4503-1DM	10/13/01	S01F1U057 Page 1 of 1

Procedure/Rev./TCN	Couplant/Batch No.	ThermometerSN/Cal Due Date	Linearity Sheet No.
FNP-0-NDE-100.31 / 8.0 / N/A	Ultragel II / 01125	43619 2/25/02	S01F1L001

Instrument

Instrument	Staveley / SONIC 136	
Serial No.	136-911K	
	Axial dB	Circ dB
Reference	35	43.6
Scanning	57	57.6
Reject	OFF	
Frequency	2.25	
Mode	P/E	
Damping	500 OHMS	

Search Unit

Transducer Mfg.	KBA
Serial Number	00LCPD
Model No.	113-222-591
Size / No.	.25" Shape Round
Frequency/Mode	2.25 / Shear
"A" Dimension	.3"
Nom Angle	45°
Meas Angle	45 °
Cable Type / No. Conn.	RG174 / 0
Cable Length	10'

Calibration Block

Cal. Blk. No.	ALA-5
Thickness	0.906
Cal. Temp	73 °F
Cal. In	11:10
Cal. Chk.	1415
Cal. Out	15:30
Ref. Blk. No.	801101
Reflector/dB	HOLE / 35
Amp/Sweep	20 % / 2.6

Axial Scan Calibration				Circ Scan Calibration			
Cal. Refl.	Signal Amp.	Sweep Div.	Wmax	Cal. Refl.	Signal Amp.	Sweep Div.	Wmax
1T	80%	3	.85	1T	80%	3	.9
2T	30%	6	1.7	2T	30%	6.2	2.1
3T	25%	9	2.6	N/A			

Calibration Remarks:
N/A

Comp Temp.	Configuration -	Wo Loc.	Lo Loc.
86 °F	PZR NOZZLE TO SAFE END	WELD C/L	*

Scan Dir.	Results NI	Results NRI	Results RI	Ind No.	% DAC	Length L1	Length Lmax	Length L2	Reference Measurement W1	Reference Measurement Wmax	Reference Measurement W2	Sweep Position S1	Sweep Position Smax	Sweep Position S2	Thickness 1"<--	Thickness C/L	Thickness -->1"	Notes:
8	○	◉	○															
7	○	◉	○															
5	○	◉	○															
2	○	◉	○															

Examination/Limitation Remarks: *OUTSIDE RADIUS OF ABOVE ELBOW

Total Length of Weld	Crown Width	Total Length of Weld Examined	Extent of Perpendicular Scans (W)	Extent of Parallel Scans (L)
26.75"	.7"	5 (L) NL 2 (L) NL 7 and 8 (W) NL	5- From NL to NL 2- From NL to NL	From (5) NL to (2) NL

Primary Examiner	Level	Initials	Assistant Examiner	Level	Initials	Non-Technical Review	Date
James F. Halley	III	JFH	N/ A	N/A		J. Eric Aycock	10-18-01

SNC NDE Level II/III Review		Date	Percentage of Code Coverage	ANII Review	Date
Darryl L. Letters	III	10-17-01	81% ~~100 composite~~ DLL 10-17-01	EGWard	10/18/01

Revision 8.0

SHARED

Farley Nuclear Plant
Ultrasonic Calibration and Examination Record

FNP-0-NDE-100.31
Southern Nuclear Operating Company

Unit	Sketch/Component Number	Date	Sheet No.
1	ALA1-4503-1DM	10/13/01	S01F1U058 Page 1 of 1

Procedure/Rev./TCN	Couplant/Batch No.	ThermometerSN/Cal Due Date	Linearity Sheet No.
FNP-0-NDE-100.31 / 8.0 / N/A	Ultragel II / 01125	43619 2/25/02	S01F1L001

Instrument

Instrument	Staveley / SONIC 136	
Serial No.	136-911K	
	Axial dB	Circ dB
Reference	76	76
Scanning	82	82
Reject	OFF	
Frequency	2.25	
Mode	DUAL	
Damping	500 OHMS	

Search Unit

Transducer Mfg.	RTD
Serial Number	01-985
Model No.	60° TRL 2 - Aust
Size / No.	2(8x14) Shape Rect.
Frequency/Mode	2.0 / Long
"A" Dimension	.4
Nom Angle	60°
Meas Angle	60°
Cable Type / No. Conn.	RG174 / 1
Cable Length	16'

Calibration Block

Cal. Blk. No.	ALA-5
Thickness	0.906
Cal. Temp	73 °F
Cal. In	11:35
Cal. Chk.	1425
Cal. Out	15:33
Ref. Blk. No.	801101
Reflector/dB	1" RAD/52
Amp/Sweep	90 % / 5.3

Axial Scan Calibration

Cal. Refl.	Signal Amp.	Sweep Div.	Wmax
1/4T SDH	60%	2	.4
3/4T SDH	80%	6	.95
1T ~~SDH~~	80%	8	1.45
Del 10-12-01			

Circ Scan Calibration

Cal. Refl.	Signal Amp.	Sweep Div.	Wmax
1T	80%	8	1.7
N/A			
N/A			

Calibration Remarks:
N.A

Comp Temp.	Configuration -	Wo Loc.	Lo Loc.
86 °F	PZR NOZZLE TO SAFE END	WELD C/L	.

Scan Dir.	Results NI	Results NRI	Results RI	Ind No.	% DAC	Length L1	Length Lmax	Length L2	Reference Measurement W1	Wmax	W2	Sweep Position S1	Smax	S2	Thickness 1"<--	C/L	-->1"	Notes:
8	○	●	○															
7	○	●	○															
5	○	●	○															
2	○	●	○															

Examination/Limitation Remarks: See Previous Data (3-18-94) for Limitation Sketch 59% Examined.
*OUTSIDE RADIUS OF ABOVE ELBOW

Total Length of Weld	Crown Width	Total Length of Weld Examined	Extent of Perpendicular Scans (W)	Extent of Parallel Scans (L)
26.75"	.7"	5 (L) NL 2 (L) NL 7 and 8 (W) NL	5- From 0 to 1.3" 2- From 0 to 1"	From (5) NL to (2) NL

Primary Examiner	Level	Initials	Assistant Examiner	Level	Initials	Non-Technical Review	Date
James F. Halley	III	JFH	N/A	N/A		J. Eric Ogoch	10-18-01

SNC NDE Level II/III Review		Date	Percentage of Code Coverage	ANII Review	Date
Gary A. Loftus	III	10-18-01	81 % composite	C G Wood	10/18/01

Revision 8.0

SHARED

Farley Nuclear Plant
Ultrasonic Calibration and Examination Record

FNP-0-NDE-100.31
Southern Nuclear Operating Company

Unit	Sketch/Component Number	Date	Sheet No.
1	ALA1-4503-1DM	10/13/01	S01F1U059 Page 1 of 2

Procedure/Rev./TCN	Couplant/Batch No.	ThermometerSN/Cal Due Date	Linearity Sheet No.
FNP-0-NDE-100.31 / 8.0 / N/A	Ultragel II / 01125	43619 2/25/02	S01F1L001

Instrument

Instrument	Staveley / SONIC 136	
Serial No.	136-911K	
	Axial dB	Circ dB
Reference	74	74
Scanning	80	80
Reject	OFF	
Frequency	2.25	
Mode	DUAL	
Damping	500 OHMS	

Search Unit

Transducer Mfg.	RTD
Serial Number	99-822
Model No.	45° TRL 2-Aust
Size / No.	2(8x14) Shape Rect.
Frequency/Mode	2.0 / Long
"A" Dimension	.44
Nom Angle	45°
Meas Angle	45°
Cable Type / No. Conn.	RG174 / ~~01~~ 9600
Cable Length	16'

Calibration Block

Cal. Blk. No.	ALA-5
Thickness	0.906
Cal. Temp	73 °F
Cal. In	12:00
Cal. Chk.	1435
Cal. Out	15:36
Ref. Blk. No.	801101
Reflector/dB	1"RAD/47
Amp/Sweep	80 % / 6.5

Axial Scan Calibration

Cal. Refl.	Signal Amp.	Sweep Div.	Wmax
1/4T SDH	50%	2	.3
3/4T SDH	80%	6	.6
1T	80%	8	.85

Circ Scan Calibration

Cal. Refl.	Signal Amp.	Sweep Div.	Wmax
1T	80	9.0	1.25
N/A			
N/A			

Calibration Remarks:
N/A

Comp Temp.	Configuration -	Wo Loc.	Lo Loc.
86 °F	PZR NOZZLE TO SAFE END	WELD C/L	*

Scan Dir.	Results NI	Results NRI	Results RI	Ind No.	% DAC	Length L1	Length Lmax	Length L2	Reference Measurement W1	Reference Measurement Wmax	Reference Measurement W2	Sweep Position S1	Sweep Position Smax	Sweep Position S2	Thickness 1"<--	Thickness C/L	Thickness -->1"	Notes:
8	○	◉	○															
7	○	◉	○															
5	○	◉	○															
2	○	◉	○															

Examination/Limitation Remarks: See previous data 3-18-94 for exam limitations 75% examined.
*OUTSIDE RADIUS OF ABOVE ELBOW

Total Length of Weld	Crown Width	Total Length of Weld Examined	Extent of Perpendicular Scans (W)	Extent of Parallel Scans (L)
26.75"	.7"	5 (L) NL 2 (L) NL 7 and 8 (W) NL	5- From 0 to 1.3" 2- From 0 to 1"	From (5) NL to (2) NL

Primary Examiner	Level	Initials	Assistant Examiner	Level	Initials	Non-Technical Review	Date
James F. Halley	III	JFH	N/A	N/A		J. Eric Clyncke	10-18-01

SNC NDE Level II/III Review		Date	Percentage of Code Coverage	ANII Review	Date
Barry A. Laffler	III	10-18-01	81% composite	E G Ward	10/18/01

Revision 8.0

S01FU059 2 of 2

WESTINGHOUSE NUCLEAR SERVICE DIVISION
INSPECTION SERVICES

LIMITATION TO EXAMINATION

PLANT J.M. FARLEY UNIT 1 SKETCH ALAI-4503

SYST/COMP PRSRZR. NOZ TO VESSEL WELDS 6" PRESSURIZER SAFETY LINES PROCEDURE FNP-O-NDE-157.12 FNP-ISI-206, REV. 5

EXAMINER Robert L. Barnett II, William G. Holley II LEVEL II DATE 3-18-94

RELATED TO: U/T X P/T ____ M/T ____ V/T ____ ITEM(S): 1(DM)

PROVIDE GENERAL INFORMATION TO DESCRIBE APPROXIMATE SIZE, LOCATION AND TYPE OF LIMITATION.

ILLUSTRATIVE ONLY

NOZZLE CONFIGURATION LIMITING 2 & 5 SCANS.

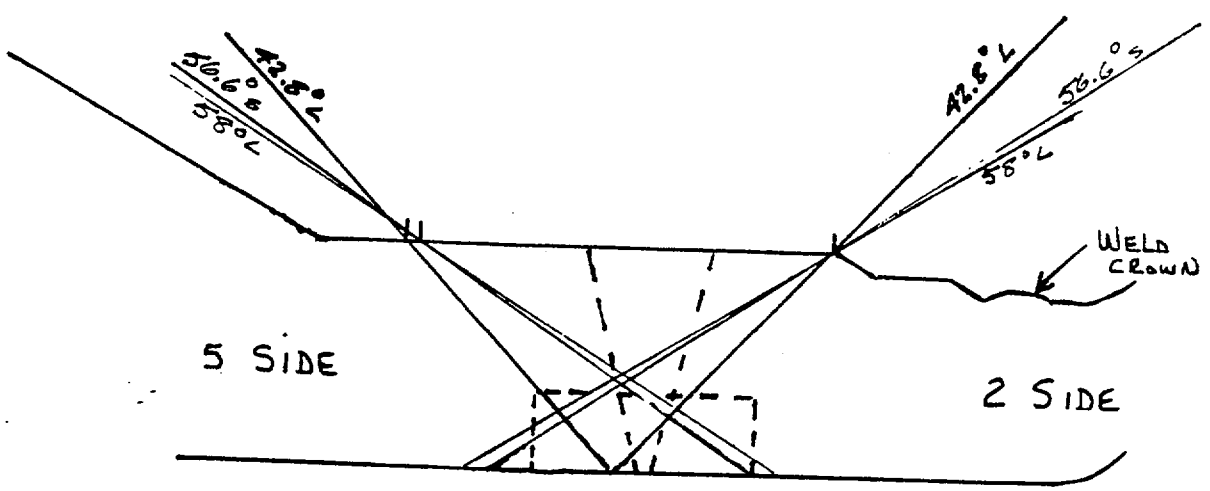

NO LIMITATIONS 7 & 8 SCANS

Barry A. Hoffman III 10-18-2001

FARLEY REVIEW Stacy J. Freeland ANII C. Gaskins 4/6/94

F49077

Farley Nuclear Plant
Liquid Penetrant Examination Record

SHARED

FNP-0-NDE-100.5
PT-F-FORM 001
Southern Nuclear Operating Company

Unit	Component Number	Procedure/Rev./TCN	Sheet No.
1	ALA1-4503-1DM	FNP-0-NDE-100.5 / 6.0 / N/A	S01F1P001 Page 1 of 1

Thermometer

Mfg/Ser. No. PTC / 43619
Cal. Due Date 02/25/02
Surface Temp. 86 o F

Manufacturer Magnaflux

Penetrant Materials

	Type	Batch
Cleaner / Remover	SKC-S	99J01K
Penetrant	SKL-SP	96J02K
Developer	SKD-S2	98D11K

Component Configuration
PZR NOZZLE TO SAFE END

% of Length Coverage 100%
% of Area Coverage 100%

Date 10/12/01

Ind. No.	Results	Dwell Time	Indication Desc. / Exam Limitations / etc.	Remarks
N/A	NRI	15	N/A	N/A

Primary Examiner	ASNT Level	Initials	Assistant Examiner	ASNT Level	Initials	Non-Technical Review	Date
James F. Halley	III	JFH	John W. Bell	II	JWB	Lynda Duke	10-17-01

SNC NDE Level II/III Review		Date	Percentage of Code Coverage	ANII Review	Date
Gary A. Loftus	III	10-17-01	100	[illegible]	10/18/01

Revision 6.

1.5

EXAMINATION SUMMARY
FOR UNIT 1
INTERVAL 3 PERIOD 2 OUTAGE 1

DRAWING ALA1-4101
12" RHR TAKE OFF-HOT LEG LOOP 1

ITEM NO	VOLUMERIC			SURFACE			VISUAL			REMARKS
	NI	NRI	RI	NI	NRI	RI	NI	NRI	RI	
Q1E11V016B (B)							X			

CONTAINMENT

12" RHR TAKE-OFF (HOT LEG) LOOP 1

ALA1- 4101

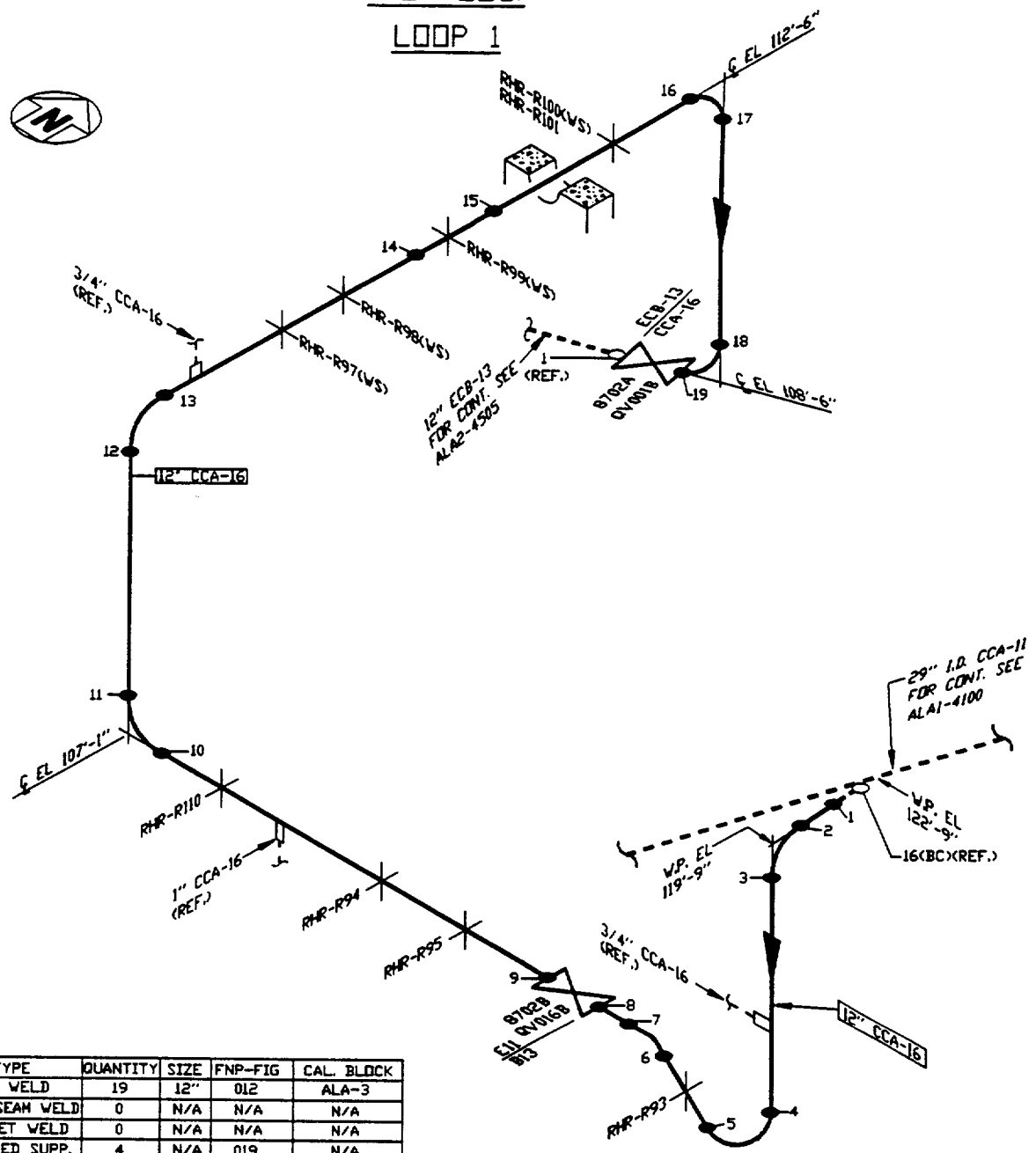

TYPE	QUANTITY	SIZE	FNP-FIG	CAL. BLOCK
BUTT WELD	19	12"	012	ALA-3
LONG SEAM WELD	0	N/A	N/A	N/A
SOCKET WELD	0	N/A	N/A	N/A
WELDED SUPP.	4	N/A	019	N/A
COMP. SUPPORT	9	N/A	037	N/A

VALVE BOLTING (SEE ALA1-6300 SH. 2)

LINE NUMBER: Q-1-B13-CCA-16
Q-1-E11-CCA-16

LINE SIZE: 12" CCA-16

BOUNDARY DIAGRAM: D-351114 SH. 1

REFERENCE ISO'S: D-514690 SH.1 & 2

REV.	DATE	BY	CHK'D	DESCRIPTION	APPR.1	APPR.2	APPR.3	APPR.4
1	3-26-98	RAW	JAR	REVISED PER REA 96-1295, REV. 0	LDT	DLG DEV		
0	6-30-92	SDH	JAR	ISSUED PER PCN S-92-1-8162.	CAB	CCM for WRH	AH	DML

CAD AUTOCAD ALA14101 JLB-03

Southern Company Services, Inc. for B13-REACTOR COOLANT & E11-RHR SYSTEM

ALABAMA POWER COMPANY
JOSEPH M. FARLEY NUCLEAR PLANT
UNIT 1

SCS DRAWING NUMBER	SHEET	REV.
A-351192	17	1

Farley Nuc t
Visual Examination Record VT-1

SHARED

FNP-0-NDE .21
Southern Nuclear Operating Company

Plant / Unit	Line Number/Examination Area/Weld No.	Drawing Number	Sheet Number
Farley / 1	ALA1-4101-QV016B (B) VALVE BOLTING	ALA1-4101	S01F1V022

Photos	Sketch	Resolution	Technique	WO / WA
☐ Yes ☐ B/W ☑ No ☐ Color	☐ Yes ☑ No	☑ 1/32" Division (Scale) ☐ 1/32" Line (Gray Card)	☑ Direct ☐ Video ☐ Remote	N/A
				Procedure No. FNP-0-NDE-100.21
				Revision No. 1.0 / N/A

Equipment	Lighting	Tools			Examiner/Initial Sig.	Level
☑ Mirror	☐ Ambient	☑ Scale	☐ Depth Gauge	☐ Level	Scott Erickson Scott R. Erickson	II
☐ Magnifier	☑ Flashlight	☐ Micrometer	☐ Comparator	☐ _____	Examiner/Initial Sig. N/ A	Level N/A
☐ CCTV	☐ Droplight	☐ Caliper	☐ Weld Gauge	☐ _____	Date (Month-Day-Year) 10/9/01	

☐ WELDS AND BASE MATERIAL VT-1	SAT	UN-SAT	N/A
Ground Blend Material	☐	☐	☑
Undercut	☐	☐	☑
Corrosion Build-up	☐	☐	☑
Gouges	☐	☐	☑
Evidence of Leakage	☐	☐	☑
Arc Strikes	☐	☐	☑
Cracks	☐	☐	☑
Other**	☐	☐	☑

* Provide details on unsat areas by use of supplemental data sheet.
* Provide details on other areas examined

☑ BOLTS, STUDS, AND WASHERS VT-1	SAT	UN-SAT	N/A
Loose Members	☑	☐	☐
Cracks	☑	☐	☐
Corrosion	☑	☐	☐
Gouges	☑	☐	☐
Thread Damage	☑	☐	☐
Deformation	☑	☐	☐
Protective Coating	☐	☐	☑
Evidence of Leakage	☑	☐	☐
Other **	☐	☐	☑

Comments Examined in place under tension

	ANII Review CG Ward	Date 10/11/01
Reviewed By Gary L. Lofton	Level III	Date 10-9-01

Revision 1.0

EXAMINATION SUMMARY
FOR UNIT 1
INTERVAL 3 PERIOD 2 OUTAGE 1

DRAWING ALA1-4201
12" ACCUMULATOR DISCHARGE-COLD LEG LOOP 2

ITEM NO	VOLUMERIC			SURFACE			VISUAL			REMARKS
	NI	NRI	RI	NI	NRI	RI	NI	NRI	RI	
Q1E21V032B (B)							X			

CONTAINMENT

12" ACCUMULATOR DISCHARGE (COLD LEG) LOOP 2

ALA1- 4201

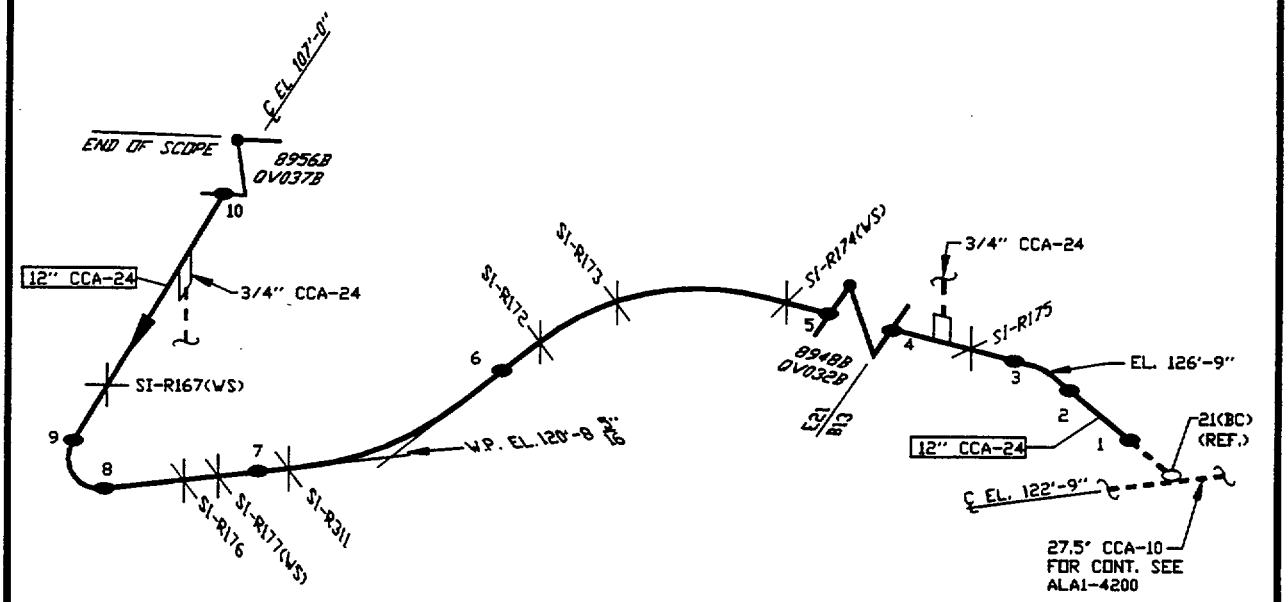

TYPE	QUANTITY	SIZE	FNP-FIG	CAL. BLOCK
BUTT WELD	10	12"	012	ALA-3
LONG SEAM WELD	0	N/A	N/A	N/A
SOCKET WELD	0	N/A	N/A	N/A
WELDED SUPP.	3	N/A	019	N/A
COMP. SUPPORT	8	N/A	037	N/A

VALVE BOLTING (SEE ALA1-6300 SH. 1)

LINE NUMBER: Q-1-B13-CCA-24
Q-1-E21-CCA-24

LINE SIZE: 12" CCA-24

BOUNDARY DIAGRAM: D-351114 SH. 1; D-351115 SH. 2

REFERENCE ISO'S: D-514686 SH. 1; D-514716 SH. 2

REV.	DATE	BY	CHK'D	DESCRIPTION	APPR.1	APPR.2	APPR.3	APPR.4
1	3-26-98	RAW	JAR	REVISED PER REA 96-1295, REV. 0	LDT	DLG DEV		
0	6-30-92	SDH	JAR	ISSUED PER PCN S-92-1-8162.	CAB	CCM for WRH	AH	DML

CAD AUTOCAD ALA14201 RAW-02

Southern Company Services, Inc. for

ALABAMA POWER COMPANY
JOSEPH M. FARLEY NUCLEAR PLANT
UNIT 1

E21-SAFETY INJECTION SYSTEM

SCS DRAWING NUMBER	SHEET	REV.
A-351192	30	1

SHARED

Plant / Unit	Line Number/Examination Area/Weld No.	Drawing Number	Sheet Number
Farley / 1	ALA1-4201-QV032B (B) VALVE BOLTING	ALA1-4201	S01F1V023

Photos	Sketch	Resolution	Technique	WO / WA
☐ Yes ☐ B/W ☑ No ☐ Color	☐ Yes ☑ No	☑ 1/32" Division (Scale) ☐ 1/32" Line (Gray Card)	☑ Direct ☐ Video ☐ Remote	N/A

Procedure No. FNP-0-NDE-100.21

Revision No. 1.0 / N/A

Equipment	Lighting	Tools		
☑ Mirror	☐ Ambient	☑ Scale	☐ Depth Gauge	☐ Level
☐ Magnifier	☑ Flashlight	☐ Micrometer	☐ Comparator	☐ _____
☐ CCTV	☐ Droplight	☐ Caliper	☐ Weld Gauge	☐ _____

Examiner/Initial Sig.	Level
Scott Erickson Scott R. Erickson	II
N/ A	N/A

Date (Month-Day-Year) 10/9/01

☐ WELDS AND BASE MATERIAL VT-1	SAT	UN-SAT	N/A
Ground Blend Material	☐	☐	☑
Undercut	☐	☐	☑
Corrosion Build-up	☐	☐	☑
Gouges	☐	☐	☑
Evidence of Leakage	☐	☐	☑
Arc Strikes	☐	☐	☑
Cracks	☐	☐	☑
Other**	☐	☐	☑

* Provide details on unsat areas by use of supplemental data sheet.
* Provide details on other areas examined

☑ BOLTS, STUDS, AND WASHERS VT-1	SAT	UN-SAT	N/A
Loose Members	☑	☐	☐
Cracks	☑	☐	☐
Corrosion	☑	☐	☐
Gouges	☑	☐	☐
Thread Damage	☑	☐	☐
Deformation	☑	☐	☐
Protective Coating	☐	☐	☑
Evidence of Leakage	☑	☐	☐
Other **	☑	☐	☐

Comments Examined in place under tension

	ANII Review	Date
	CGWood	10/11/01
Reviewed By [illegible]	Level III	Date 10-9-01

EXAMINATION SUMMARY
FOR UNIT 1
INTERVAL 3 PERIOD 2 OUTAGE 1

DRAWING ALA1-4202
6"&8" SAFETY INJECTION SYSTEM-COLD LEG LOOP 2

ITEM NO	VOLUMERIC			SURFACE			VISUAL			REMARKS
	NI	NRI	RI	NI	NRI	RI	NI	NRI	RI	
FLANGE 1							X			
Q1E11V051B (B)							X			

CONTAINMENT

6" & 8" SAFETY INJECTION SYSTEM (COLD LEG) LOOP 2

ALA1- 4202

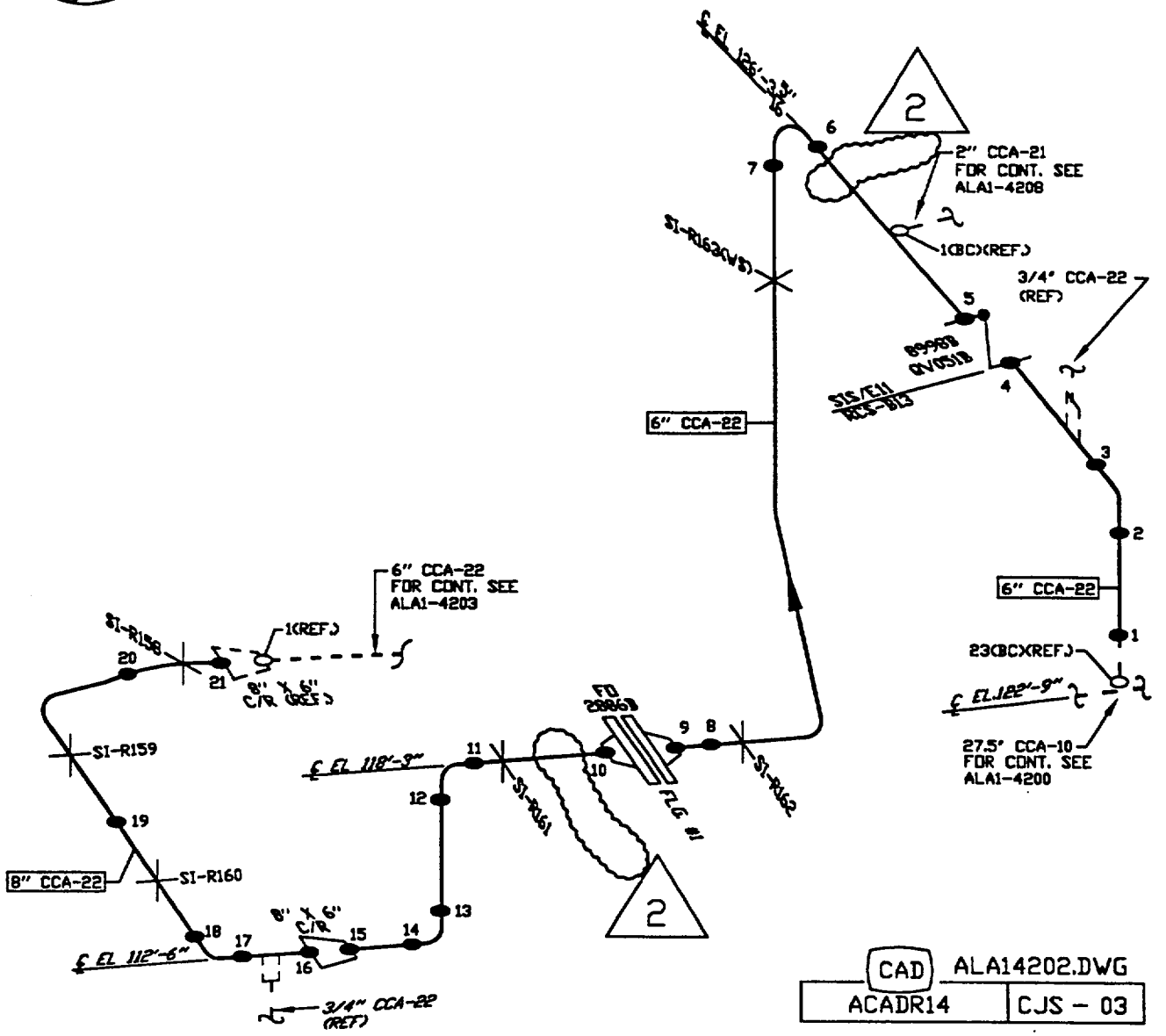

CAD ALA14202.DWG

ACADR14	CJS - 03

TYPE	QUANTITY	SIZE	FNP-FIG	CAL. BLOCK
BUTT WELD	6	8"	012	ALA-5
BUTT WELD	15	6"	012	ALA-6
BRANCH CONN.	0	N/A	N/A	N/A
SOCKET WELD	0	N/A	N/A	N/A
WELDED SUPP.	1	N/A	019	N/A
COMP. SUPPORT	6	N/A	037	N/A

2

FLANGE BOLTING (SEE ALA1-4700)
VALVE BOLTING (SEE ALA1-6300 SH.1)

LINE NUMBER: Q-1-B13-CCA-22 Q-1-E11-CCA-22	BOUNDARY DIAGRAM: D-351114 SH. 1; D-351115 SH. 1
	REFERENCE ISO'S: D-514686 SH. 1
LINE SIZE: 8" CCA-22; 6" CCA-22	D-514718 SH. 4

REV.	DATE	BY	CHK'D	DESCRIPTION	APPR.1	APPR.2	APPR.3	APPR.4
2	10-10-00	CJS	GES	REVISED PER ABN 00-1-1807, REV. 0	DEW			
1	3-26-98	RAW	JAR	REVISED PER REA 96-1295, REV. 0	LDT	DLG DEW		

Southern Company Services, Inc. for E11-SAFETY INJECTION SYSTEM / B13-REACTOR COOLANT

ALABAMA POWER COMPANY
JOSEPH M. FARLEY NUCLEAR PLANT
UNIT 1

SCS DRAWING NUMBER	SHEET	REV.
A-351192	31	2

"This document contains the proprietary, confidential, and/or trade secret information of the subsidiaries of The Southern Company or of third parties. It is intended for use only by employees of, or authorized contractors of, the subsidiaries of The Southern Company. Unauthorized possession, use distribution, copying, dissemination, or disclosure of any portion hereof is prohibited."

Farley Nuc ant
Visual Examination Record VT-1

SHARED

FNP-0-N .00.21
Southern Nuclear Operating Company

Plant / Unit	Line Number/Examination Area/Weld No.	Drawing Number	Sheet Number
Farley / 1	ALA1-4202-FLG-1 FLANGE BOLTING	ALA1-4202	S01F1V027

Photos	Sketch	Resolution	Technique	
☐ Yes ☐ B/W ☑ No ☐ Color	☐ Yes ☑ No	☑ 1/32" Division (Scale) ☐ 1/32" Line (Gray Card)	☑ Direct ☐ Video ☐ Remote	WO / WA N/A Procedure No. FNP-0-NDE-100.21 Revision No. 1.0 / N/A

Equipment	Lighting	Tools			Examiner/Initial Scott Erickson Sig. Scott R. Erickson	Level II
☑ Mirror	☐ Ambient	☑ Scale	☐ Depth Gauge	☐ Level	Examiner/Initial N/ A Sig.	Level N/A
☐ Magnifier	☑ Flashlight	☐ Micrometer	☐ Comparator	☐ _____	Date (Month-Day-Year) 10/10/01	
☐ CCTV	☐ Droplight	☐ Caliper	☐ Weld Gauge	☐ _____		

☐ WELDS AND BASE MATERIAL VT-1	SAT	*UN-SAT	N/A
Ground Blend Material	☐	☐	☑
Undercut	☐	☐	☑
Corrosion Build-up	☐	☐	☑
Gouges	☐	☐	☑
Evidence of Leakage	☐	☐	☑
Arc Strikes	☐	☐	☑
Cracks	☐	☐	☑
Other**	☐	☐	☑

* Provide details on unsat areas by use of supplemental data sheet.
** Provide details on other areas examined

☑ BOLTS, STUDS, AND WASHERS VT-1	SAT	*UN-SAT	N/A
Loose Members	☑	☐	☐
Cracks	☑	☐	☐
Corrosion	☑	☐	☐
Gouges	☑	☐	☐
Thread Damage	☑	☐	☐
Deformation	☑	☐	☐
Protective Coating	☐	☐	☑
Evidence of Leakage	☑	☐	☐
Other **	☑	☐	☐

Comments Examined in place under tension.

		ANII Review	Date 10/11/01
Reviewed By		Level III	Date 10-10-01

Revision 1.0

Farley Nuc[illegible]t
Visual Examination Record VT-1

SHARED

FNP-0-ND[illegible] .21
Southern Nuclear Operating Company

Plant / Unit	Line Number/Examination Area/Weld No.	Drawing Number	Sheet Number
Farley / 1	ALA1-4202-QV051B (B) VALVE BOLTING	ALA1-4202	S01F1V024

Photos	Sketch	Resolution	Technique	WO / WA N/A
☐ Yes ☐ B/W ☑ No ☐ Color	☐ Yes ☑ No	☑ 1/32" Division (Scale) ☐ 1/32" Line (Gray Card)	☑ Direct ☐ Video ☐ Remote	Procedure No. FNP-0-NDE-100.21 Revision No. 1.0 / N/A

Equipment	Lighting	Tools			Examiner/Initial Scott Erickson Sig. Scott R. Erickson	Level II
☑ Mirror ☐ Magnifier ☐ CCTV	☐ Ambient ☑ Flashlight ☐ Droplight	☑ Scale ☐ Micrometer ☐ Caliper	☐ Depth Gauge ☐ Comparator ☐ Weld Gauge	☐ Level ☐ _____ ☐ _____	Examiner/Initial N/ A Sig.	Level N/A
					Date (Month-Day-Year) 10/9/01	

☐ WELDS AND BASE MATERIAL VT-1	SAT	UN-SAT	N/A
Ground Blend Material	☐	☐	☑
Undercut	☐	☐	☑
Corrosion Build-up	☐	☐	☑
Gouges	☐	☐	☑
Evidence of Leakage	☐	☐	☑
Arc Strikes	☐	☐	☑
Cracks	☐	☐	☑
Other**	☐	☐	☑

* Provide details on unsat areas by use of supplemental data sheet.
* Provide details on other areas examined

☑ BOLTS, STUDS, AND WASHERS VT-1	SAT	UN-SAT	N/A
Loose Members	☑	☐	☐
Cracks	☑	☐	☐
Corrosion	☑	☐	☐
Gouges	☑	☐	☐
Thread Damage	☑	☐	☐
Deformation	☑	☐	☐
Protective Coating	☐	☐	☑
Evidence of Leakage	☑	☐	☐
Other **	☑	☐	☐

Comments Examined in place under tension

	ANII Review C G Wa[illegible]	Date 10/11/01
Reviewed By [illegible]	Level III	Date 10-9-01

Revision 1.0

EXAMINATION SUMMARY
FOR UNIT 1
INTERVAL 3 PERIOD 2 OUTAGE 1

DRAWING ALA1-4204
6"&2" SAFETY INJECTION SYSTEM-HOT LEG LOOP 2

ITEM NO	VOLUMERIC			SURFACE			VISUAL			REMARKS
	NI	NRI	RI	NI	NRI	RI	NI	NRI	RI	
Q1E21V077B (B)							X			

CONTAINMENT

6" & 2" SAFETY INJECTION SYSTEM (HOT LEG) LOOP 2

ALA1- 4204

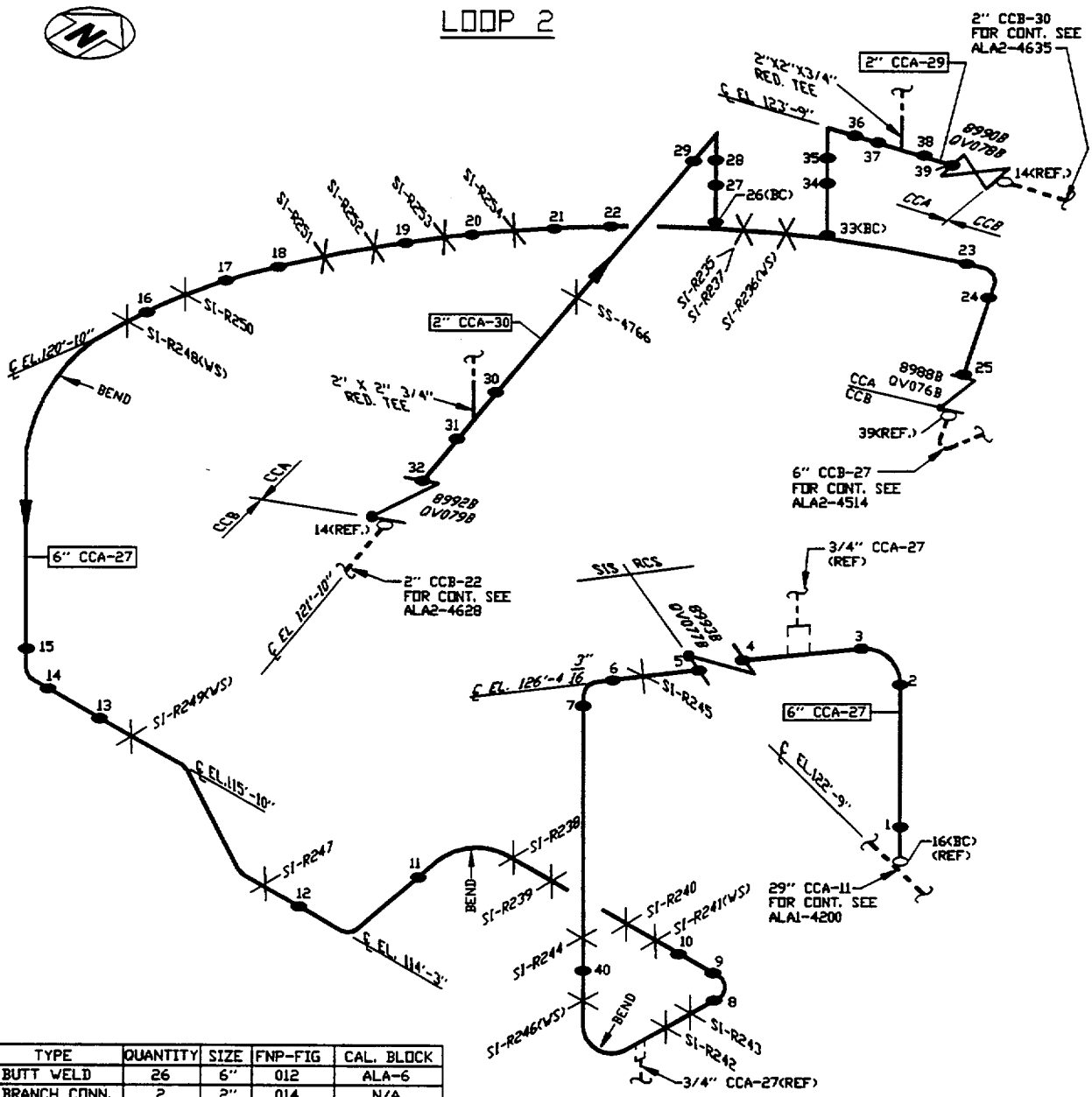

TYPE	QUANTITY	SIZE	FNP-FIG	CAL. BLOCK
BUTT WELD	26	6"	012	ALA-6
BRANCH CONN.	2	2"	014	N/A
SOCKET WELD	12	2"	011	N/A
WELDED SUPP.	5	N/A	019	N/A
COMP. SUPPORT	21	N/A	037	N/A

VALVE BOLTING (SEE ALA1-6300 SH. 1)

LINE NUMBER: Q-1-B13-CCA-27
Q-1-E21-CCA-30; Q-1-E21-CCA-27

LINE SIZE: 6" CCA-27; 2" CCA-29
2" CCA-30

BOUNDARY DIAGRAM	D-351114 SH. 1; D-351115 SH. 1
REFERENCE ISO'S	D-514687 SH. 1
	D-514715 SH. 1
	D-514990 SH. 1
	D-514980 SH. 1

REV.	DATE	BY	CHK'D	DESCRIPTION	APPR.1	APPR.2	APPR.3	APPR.4
1	3-26-98	RAW	JAR	REVISED PER REA 96-1295, REV. 0	LDT	DLG DEW CCM for WRH		
0	6-30-92	SDH	JAR	ISSUED PER PCN S-92-1-8162.	CAB		AH	DML

CAD ALA14204 RAV-02
AUTOCAD

Southern Company Services, Inc. for

ALABAMA POWER COMPANY
JOSEPH M. FARLEY NUCLEAR PLANT
UNIT 1

B13-REACTOR COOLANT E21-SAFETY INJECTION

SCS DRAWING NUMBER	SHEET	REV.
A-351192	33	1

Farley Nuc[illegible] [illegible]t
Visual Examination Record VT-1

SHARED

FNP-0-ND[illegible] .21
Southern Nuclear Operating Company

Plant / Unit	Line Number/Examination Area/Weld No.	Drawing Number	Sheet Number
Farley / 1	ALA1-4204-QV077B (B) VALVE BOLTING	ALA1-4204	S01F1V025

Photos	Sketch	Resolution	Technique	WO / WA N/A
☐ Yes ☐ B/W ☑ No ☐ Color	☐ Yes ☑ No	☑ 1/32" Division (Scale) ☐ 1/32" Line (Gray Card)	☑ Direct ☐ Video ☐ Remote	Procedure No. FNP-0-NDE-100.21 Revision No. 1.0 / N/A

Equipment	Lighting	Tools			Examiner/Initial Scott Erickson Sig. Scott R. Erickson	Level II
☑ Mirror	☐ Ambient	☑ Scale	☐ Depth Gauge	☐ Level	Examiner/Initial N/ A Sig.	Level N/A
☐ Magnifier	☑ Flashlight	☐ Micrometer	☐ Comparator	☐ _____	Date (Month-Day-Year) 10/9/01	
☐ CCTV	☐ Droplight	☐ Caliper	☐ Weld Gauge	☐ _____		

☐ WELDS AND BASE MATERIAL VT-1	SAT	UN-SAT	N/A
Ground Blend Material	☐	☐	☑
Undercut	☐	☐	☑
Corrosion Build-up	☐	☐	☑
Gouges	☐	☐	☑
Evidence of Leakage	☐	☐	☑
Arc Strikes	☐	☐	☑
Cracks	☐	☐	☑
Other**	☐	☐	☑

* Provide details on unsat areas by use of supplemental data sheet.
* Provide details on other areas examined

☑ BOLTS, STUDS, AND WASHERS VT-1	SAT	UN-SAT	N/A
Loose Members	☑	☐	☐
Cracks	☑	☐	☐
Corrosion	☑	☐	☐
Gouges	☑	☐	☐
Thread Damage	☑	☐	☐
Deformation	☑	☐	☐
Protective Coating	☐	☐	☑
Evidence of Leakage	☑	☐	☐
Other **	☑	☐	☐

Comments Examined in place under tension

	ANII Review [illegible]	Date 10/11/01	
Reviewed By [illegible]	Level III	Date 10-9-01	

Revision 1.0

EXAMINATION SUMMARY
FOR UNIT 1
INTERVAL 3 PERIOD 2 OUTAGE 1

DRAWING ALA1-4209
2" SEAL INJECTION LEG LOOP 2

ITEM NO	VOLUMERIC			SURFACE			VISUAL			REMARKS
	NI	NRI	RI	NI	NRI	RI	NI	NRI	RI	
FLANGE 1							X			

CONTAINMENT

2" SEAL INJECTION
LOOP 2

ALA1- 4209

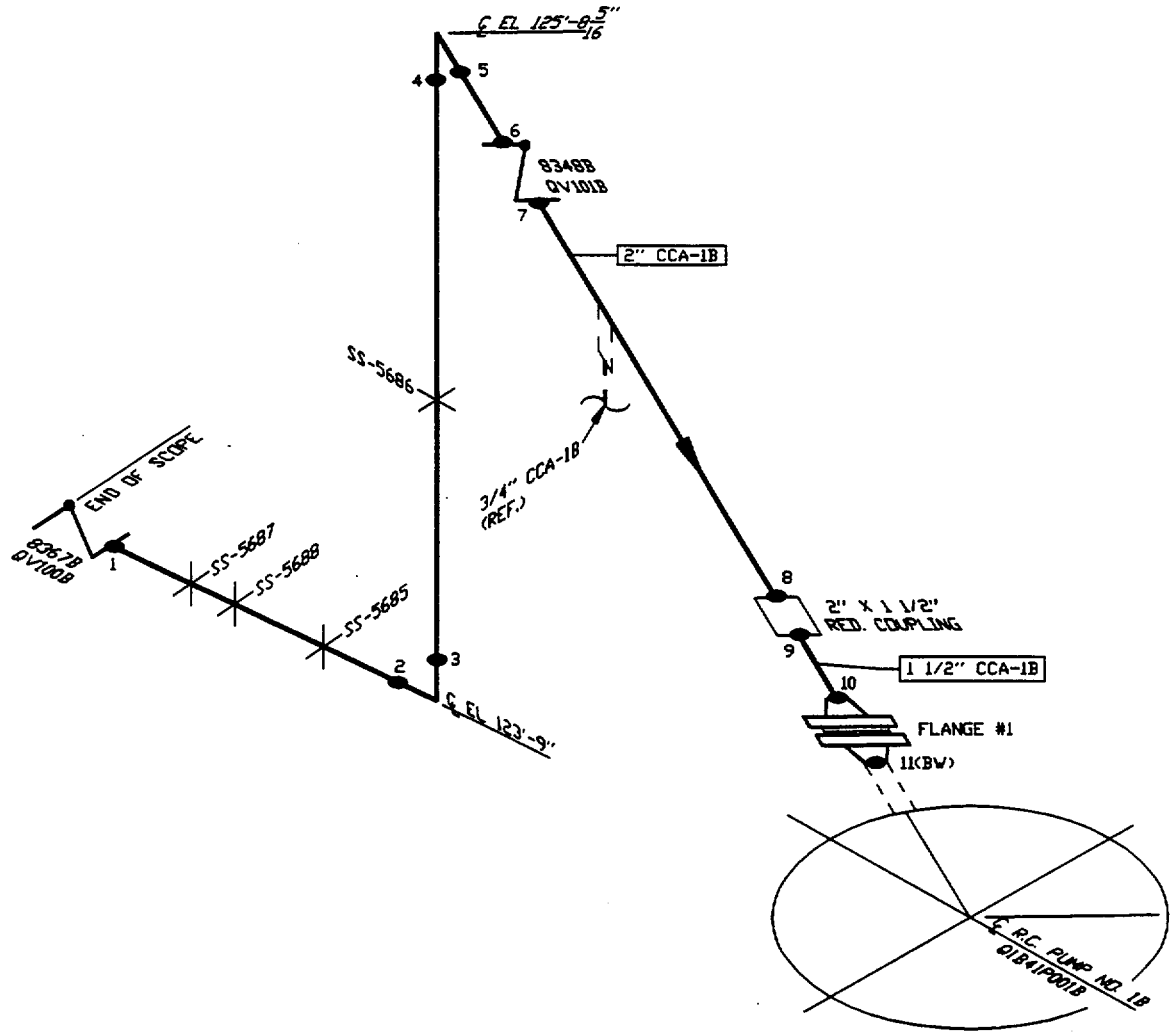

TYPE	QUANTITY	SIZE	FNP-FIG	CAL. BLOCK
BUTT WELD	1	1-1/2"	011	N/A
LONG SEAM WELD	0	N/A	N/A	N/A
SOCKET WELD	8	2"	011	N/A
SOCKET WELD	2	1-1/2"	011	N/A
WELDED SUPP.	0	N/A	N/A	N/A
COMP. SUPPORT	4	N/A	037	N/A

FLANGE BOLTING (SEE ALA1-4700)

LINE NUMBER: Q-1-E21-CCA-1B

LINE SIZE: 2" CCA-1B
1-1/2" CCA-1B

BOUNDARY DIAGRAM	D-351116 SH. 1
REFERENCE ISO'S	D-514976 SH. 1

REV.	DATE	BY	CHK'D	DESCRIPTION	APPR.1	APPR.2	APPR.3	APPR.4
1	3-26-98	RAW	JAR	REVISED PER REA 96-1295, REV. 0	LDT	DLG DEW		
0	6-30-92	SDH	JAR	ISSUED PER PCN S-92-1-8162.	CAB	CCM for WRH	AH	DML

Southern Company Services, Inc. for

ALABAMA POWER COMPANY
JOSEPH M. FARLEY NUCLEAR PLANT
UNIT 1

E21-SAFETY INJECTION

SCS DRAWING NUMBER	SHEET	REV.
A-351192	38	1

CAD AUTOCAD ALA14209 RAV-02

Farley Nuclear Plant
Visual Examination Record VT-1

SHARED

FNP-0-NDE-100.21
Southern Nuclear Operating Company

Plant / Unit	Line Number/Examination Area/Weld No.	Drawing Number	Sheet Number
Farley / 1	ALA1-4209-FLG-1 FLANGE BOLTING	ALA1-4209	S01F1V012

Photos	Sketch	Resolution	Technique	WO / WA
☐ Yes ☐ B/W ☑ No ☐ Color	☑ Yes ☐ No	☑ 1/32" Division (Scale) ☐ 1/32" Line (Gray Card)	☑ Direct ☐ Video ☐ Remote	Procedure No. FNP-0-NDE-100.21 Revision No. 1.0 / N/A

Equipment	Lighting	Tools			Examiner/Initial Scott Erickson Sig. Scott R. Erickson	Level II
☑ Mirror	☐ Ambient	☑ Scale	☐ Depth Gauge	☐ Level	Examiner/Initial N/ A Sig.	Level N/A
☐ Magnifier	☑ Flashlight	☐ Micrometer	☐ Comparator	☐ _____	Date (Month-Day-Year) 10/6/01	
☐ CCTV	☐ Droplight	☐ Caliper	☐ Weld Gauge	☐ _____		

☐ WELDS AND BASE MATERIAL VT-1	SAT	UN-SAT	N/A
Ground Blend Material	☐	☐	☑
Undercut	☐	☐	☑
Corrosion Build-up	☐	☐	☑
Gouges	☐	☐	☑
Evidence of Leakage	☐	☐	☑
Arc Strikes	☐	☐	☑
Cracks	☐	☐	☑
Other**	☐	☐	☑

* Provide details on unsat areas by use of supplemental data sheet.
* Provide details on other areas examined

☑ BOLTS, STUDS, AND WASHERS VT-1	SAT	UN-SAT	N/A
Loose Members	☑	☐	☐
Cracks	☑	☐	☐
Corrosion	☑	☐	☐
Gouges	☑	☐	☐
Thread Damage	☑	☐	☐
Deformation	☑	☐	☐
Protective Coating	☑	☐	☐
Evidence of Leakage	☑	☐	☐
Other **	☐	☐	☑

Comments Examined in place under tension

	ANII Review C G Wood	Date 10/9/01
Reviewed By Larry A. Lefler	Level III	Date 10-8-2001

Revision 1.0

EXAMINATION SUMMARY
FOR UNIT 1
INTERVAL 3 PERIOD 2 OUTAGE 1

DRAWING ALA1-4301
12" RHR TAKE OFF-HOT LEG LOOP 3

ITEM NO	VOLUMERIC			SURFACE			VISUAL			REMARKS
	NI	NRI	RI	NI	NRI	RI	NI	NRI	RI	
Q1E11V016A (B)							X			

CONTAINMENT

12" RHR TAKE-OFF (HOT LEG) LOOP 3

ALA1- 4301

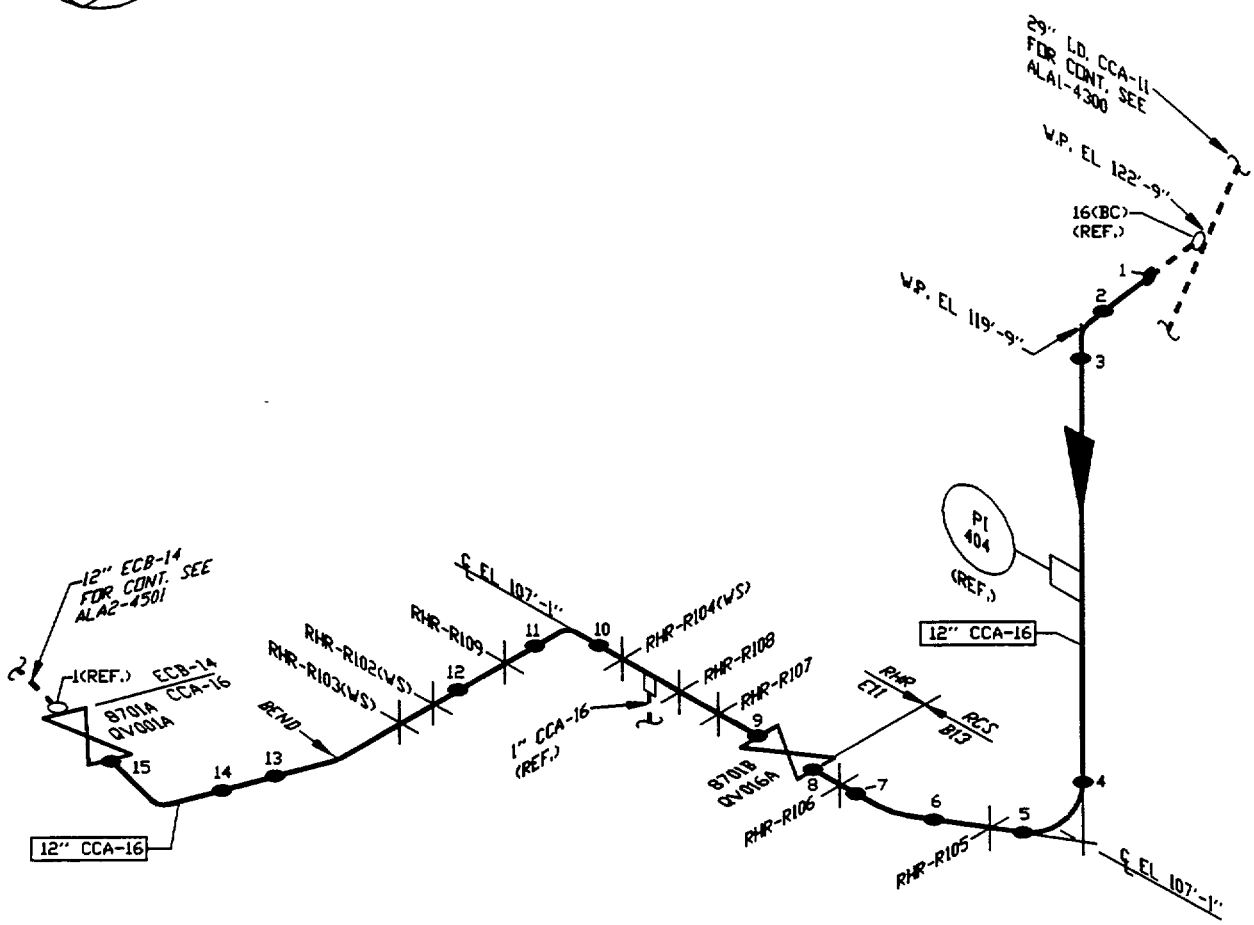

TYPE	QUANTITY	SIZE	FNP-FIG	CAL. BLOCK
BUTT WELD	15	12"	012	ALA-3
LONG SEAM WELD	0	N/A	N/A	N/A
SOCKET WELD	0	N/A	N/A	N/A
WELDED SUPP.	3	N/A	019	N/A
COMP. SUPPORT	8	N/A	037	N/A

VALVE BOLTING (SEE ALA1-6300 SH. 2)

LINE NUMBER: Q-1-B13-CCA-16
Q-1-E11-CCA-16

LINE SIZE: 12" CCA-16

BOUNDARY DIAGRAM: D-351114 SH. 1; D-351118 SH. 1

REFERENCE ISO'S: D-514690 SH. 3 & 4

REV.	DATE	BY	CHK'D	DESCRIPTION	APPR.1	APPR.2	APPR.3	APPR.4
1	3-26-98	RAW	JAR	REVISED PER REA 96-1295, REV. 0	LDT	DLG DEV CCM for WRH		
0	6-30-92	SDH	JAR	ISSUED PER PCN S-92-1-8162.	CAB		AH	DML

CAD AUTOCAD ALA14301 RAV-02

Southern Company Services, Inc. for B13-REACTOR COOLANT & E11-RHR SYSTEM

ALABAMA POWER COMPANY
JOSEPH M. FARLEY NUCLEAR PLANT
UNIT 1

SCS DRAWING NUMBER	SHEET	REV.
A-351192	43	1

Farley Nuc[illegible]t
Visual Examination Record VT-1

SHARED

FNP-0-N[illegible] .21
Southern Nuclear Operating Company

Plant / Unit	Line Number/Examination Area/Weld No.	Drawing Number	Sheet Number
Farley / 1	ALA1-4301-QV016A (B) VALVE BOLTING	ALA1-4301	S01F1V026

Photos	Sketch	Resolution	Technique	
☐ Yes ☐ B/W ☑ No ☐ Color	☐ Yes ☑ No	☑ 1/32" Division (Scale) ☐ 1/32" Line (Gray Card)	☑ Direct ☐ Video ☐ Remote	WO / WA N/A Procedure No. FNP-0-NDE-100.21 Revision No. 1.0 / N/A

Equipment	Lighting	Tools			Examiner/Initial Scott Erickson Sig. Scott R. Erickson	Level II
☑ Mirror	☐ Ambient	☑ Scale	☐ Depth Gauge	☐ Level	Examiner/Initial N/ A Sig.	Level N/A
☐ Magnifier	☑ Flashlight	☐ Micrometer	☐ Comparator	☐ _____	Date (Month-Day-Year) 10/9/01	
☐ CCTV	☐ Droplight	☐ Caliper	☐ Weld Gauge	☐ _____		

☐ WELDS AND BASE MATERIAL VT-1	SAT	UN-SAT	N/A
Ground Blend Material	☐	☐	☑
Undercut	☐	☐	☑
Corrosion Build-up	☐	☐	☑
Gouges	☐	☐	☑
Evidence of Leakage	☐	☐	☑
Arc Strikes	☐	☐	☑
Cracks	☐	☐	☑
Other**	☐	☐	☑

* Provide details on unsat areas by use of supplemental data sheet.
* Provide details on other areas examined

☑ BOLTS, STUDS, AND WASHERS VT-1	SAT	UN-SAT	N/A
Loose Members	☑	☐	☐
Cracks	☑	☐	☐
Corrosion	☑	☐	☐
Gouges	☑	☐	☐
Thread Damage	☑	☐	☐
Deformation	☑	☐	☐
Protective Coating	☐	☐	☑
Evidence of Leakage	☑	☐	☐
Other **	☑	☐	☐

Comments Examined in place under tension

	ANII Review C G Wood	Date 10/11/01
Reviewed By Gary L. Lofton	Level III	Date 10-9-01

Revision 1.0

EXAMINATION SUMMARY
FOR UNIT 1
INTERVAL 3 PERIOD 2 OUTAGE 1

DRAWING ALA1-4309
2" & 1 1/2" SEAL INJECTION LOOP 3

ITEM NO	VOLUMERIC			SURFACE			VISUAL			REMARKS
	NI	NRI	RI	NI	NRI	RI	NI	NRI	RI	
FLANGE 1							X			

CONTAINMENT

2" & 1-1/2" SEAL INJECTION LOOP 3

ALA1- 4309

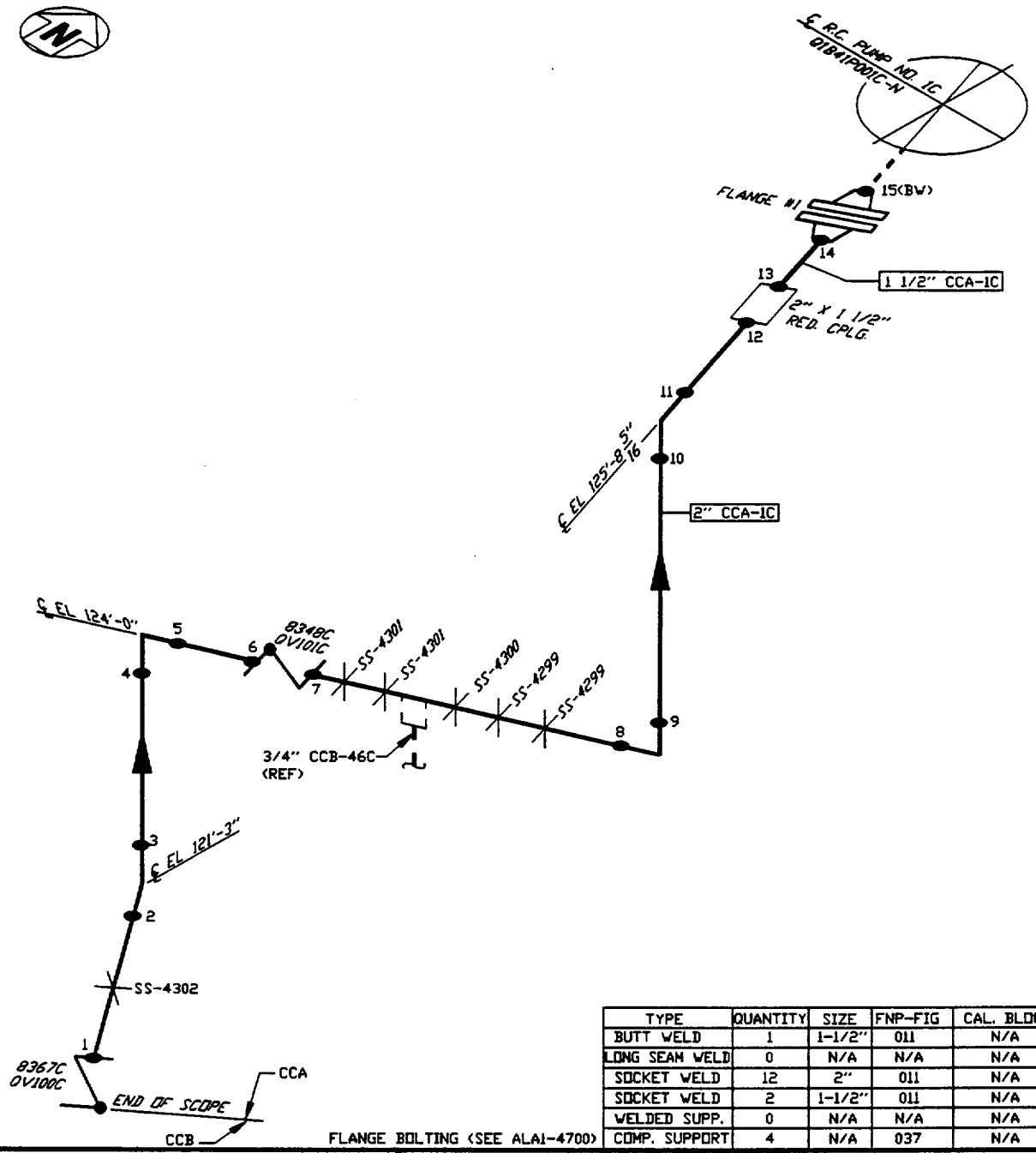

FLANGE BOLTING (SEE ALA1-4700)

TYPE	QUANTITY	SIZE	FNP-FIG	CAL. BLOCK
BUTT WELD	1	1-1/2"	011	N/A
LONG SEAM WELD	0	N/A	N/A	N/A
SOCKET WELD	12	2"	011	N/A
SOCKET WELD	2	1-1/2"	011	N/A
WELDED SUPP.	0	N/A	N/A	N/A
COMP. SUPPORT	4	N/A	037	N/A

LINE NUMBER: Q-1-E21-CCA-1C

LINE SIZE: 2" CCA-1C
1-1/2" CCA-1C

BOUNDARY DIAGRAM D-351116 SH. 1

REFERENCE ISO'S D-514975 SH. 1

REV.	DATE	BY	CHK'D	DESCRIPTION	APPR.1	APPR.2	APPR.3	APPR.4
1	3-26-98	RAW	JAR	REVISED PER REA 96-1295, REV. 0	LDT	DLG for DEW		
0	6-30-92	SDH	JAR	ISSUED PER PCN S-92-1-8162.	CAB	CCM for WRH	AH	DML

CAD AUTOCAD ALA14309 RAV-02

Southern Company Services, Inc. for

ALABAMA POWER COMPANY
JOSEPH M. FARLEY NUCLEAR PLANT
UNIT 1

E21-SAFETY INJECTION

SCS DRAWING NUMBER	SHEET	REV.
A-351192	51	1

Farley Nuclear Plant
Visual Examination Record VT-1

SHARED

FNP-0-NDE-100.21
Southern Nuclear Operating Company

Plant / Unit	Line Number/Examination Area/Weld No.	Drawing Number	Sheet Number
Farley / 1	ALA1-4309-FLG-1 FLANGE BOLTING	ALA1-4309	S01F1V013

Photos	Sketch	Resolution	Technique	WO / WA
☐ Yes ☐ B/W ☑ No ☐ Color	☑ Yes ☐ No	☑ 1/32" Division (Scale) ☐ 1/32" Line (Gray Card)	☑ Direct ☐ Video ☐ Remote	Procedure No. FNP-0-NDE-100.21 Revision No. 1.0 / N/A

Equipment	Lighting	Tools			Examiner/Initial Scott Erickson Sig. Scott R. Erickson	Level II
☑ Mirror ☐ Magnifier ☐ CCTV	☐ Ambient ☑ Flashlight ☐ Droplight	☑ Scale ☐ Micrometer ☐ Caliper	☐ Depth Gauge ☐ Comparator ☐ Weld Gauge	☐ Level ☐ _____ ☐ _____	Examiner/Initial N/ A Sig.	Level N/A
					Date (Month-Day-Year) 10/6/01	

☐ WELDS AND BASE MATERIAL VT-1	SAT	UN-SAT	N/A
Ground Blend Material	☐	☐	☑
Undercut	☐	☐	☑
Corrosion Build-up	☐	☐	☑
Gouges	☐	☐	☑
Evidence of Leakage	☐	☐	☑
Arc Strikes	☐	☐	☑
Cracks	☐	☐	☑
Other**	☐	☐	☑

* Provide details on unsat areas by use of supplemental data sheet.
* Provide details on other areas examined

☑ BOLTS, STUDS, AND WASHERS VT-1	SAT	UN-SAT	N/A
Loose Members	☑	☐	☐
Cracks	☑	☐	☐
Corrosion	☑	☐	☐
Gouges	☑	☐	☐
Thread Damage	☑	☐	☐
Deformation	☑	☐	☐
Protective Coating	☑	☐	☐
Evidence of Leakage	☑	☐	☐
Other **	☐	☐	☑

Comments Examined in place under tension

	ANII Review [illegible]	Date 10/9/01
Reviewed By [illegible]	Level III	Date 10-8-2001

Revision 1.0

1.6

EXAMINATION SUMMARY
FOR UNIT 1
INTERVAL 3 PERIOD 2 OUTAGE 1

DRAWING ALA1-5100
REACTOR COOLANT PUMP A

ITEM NO	VOLUMERIC			SURFACE			VISUAL			REMARKS
	NI	NRI	RI	NI	NRI	RI	NI	NRI	RI	
B25							X			
B26							X			
B27							X			
B28							X			
B29							X			
B30							X			
B31							X			
B32							X			
B33							X			
B34							X			
B35							X			
B36							X			
FW 1					X					

CONTAINMENT

ALA1-5100

REACTOR COOLANT PUMP A

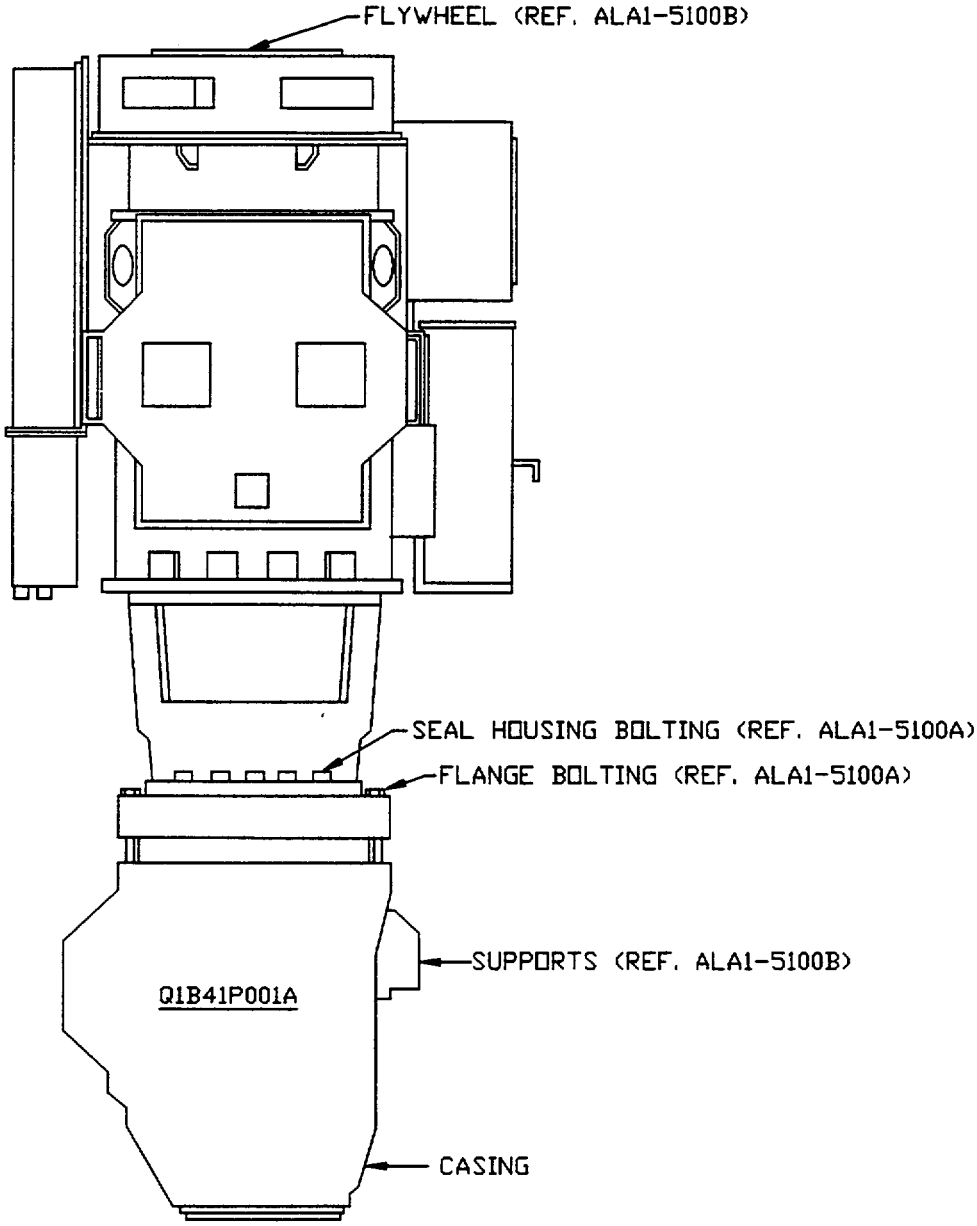

REV.	DATE	BY	CHK'D	DESCRIPTION	APPR.1	APPR.2	APPR.3	APPR.4
1	3-26-98	RAW	JAR	REVISED PER REA 96-1295, REV. 0	LDT	DLG DEV CCM for WRH		
0	6-30-92	SDH	JAR	ISSUED PER PCN S-92-1-8162.	CAB		AH	DML

CAD AUTOCAD ALA15100 RAV-02

Southern Company Services, Inc. for REACTOR COOLANT PUMP

ALABAMA POWER COMPANY
JOSEPH M. FARLEY NUCLEAR PLANT
UNIT 1

SCS DRAWING NUMBER	SHEET	REV.
A-351192	63	1

ALA1-5100A

R. C. PUMP SEAL HOUSING BOLTING & R. C. PUMP FLANGE BOLTING

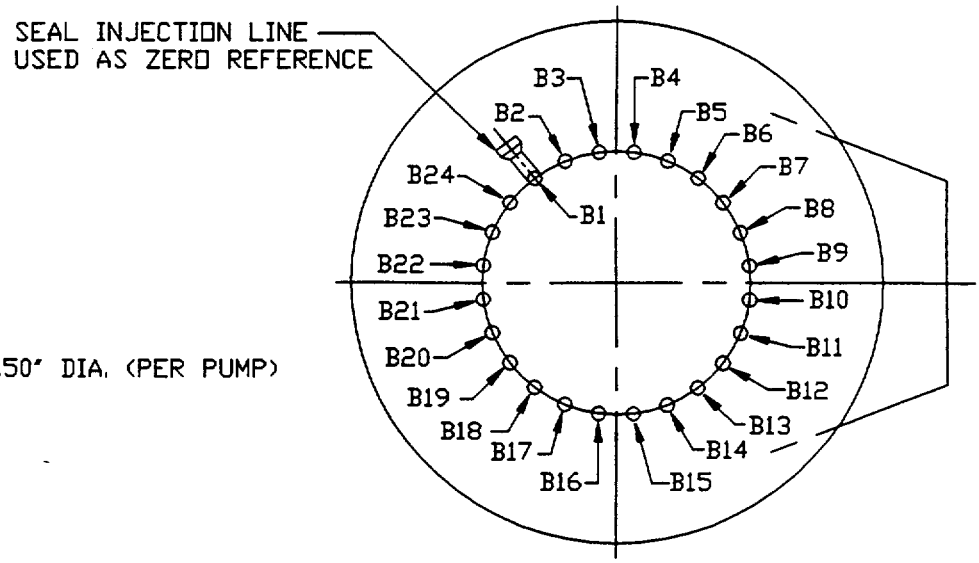

NOTE:
24 BOLTS 4.50" DIA. (PER PUMP)

REACTOR COOLANT PUMP FLANGE BOLTING

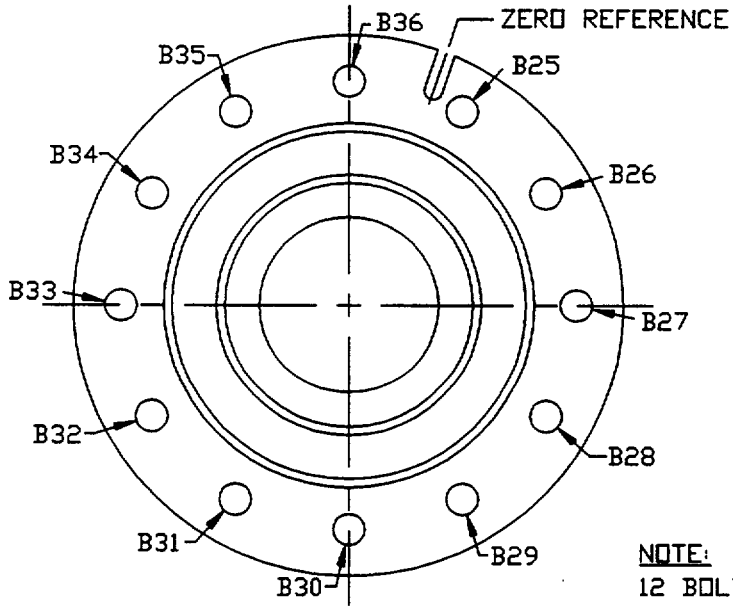

NOTE:
12 BOLTS 2.0" DIA. (PER PUMP)

REACTOR COOLANT PUMP SEAL HOUSING BOLTING

FNP FIG.	CAL. BLOCK
016	ALA-35

REV.	DATE	BY	CHK'D	DESCRIPTION	APPR.1	APPR.2	APPR.3	APPR.4
1	3-26-98	RAW	JAR	REVISED PER REA 96-1295, REV. 0	LDT	DLG DEV CCM for WRH		
0	6-30-92	SDH	JAR	ISSUED PER PCN S-92-1-8162.	CAB		AH	DML

Southern Company Services, Inc. for REACTOR COOLANT PUMP

ALABAMA POWER COMPANY
JOSEPH M. FARLEY NUCLEAR PLANT
UNIT 1

SCS DRAWING NUMBER	SHEET	REV.
A-351192	64	1

CAD AUTOCAD ALA5100A RAV-02

CONTAINMENT

ALA1-5100B

PUMP SUPPORTS AND STRUCTURES AND R. C. PUMP FLYWHEEL

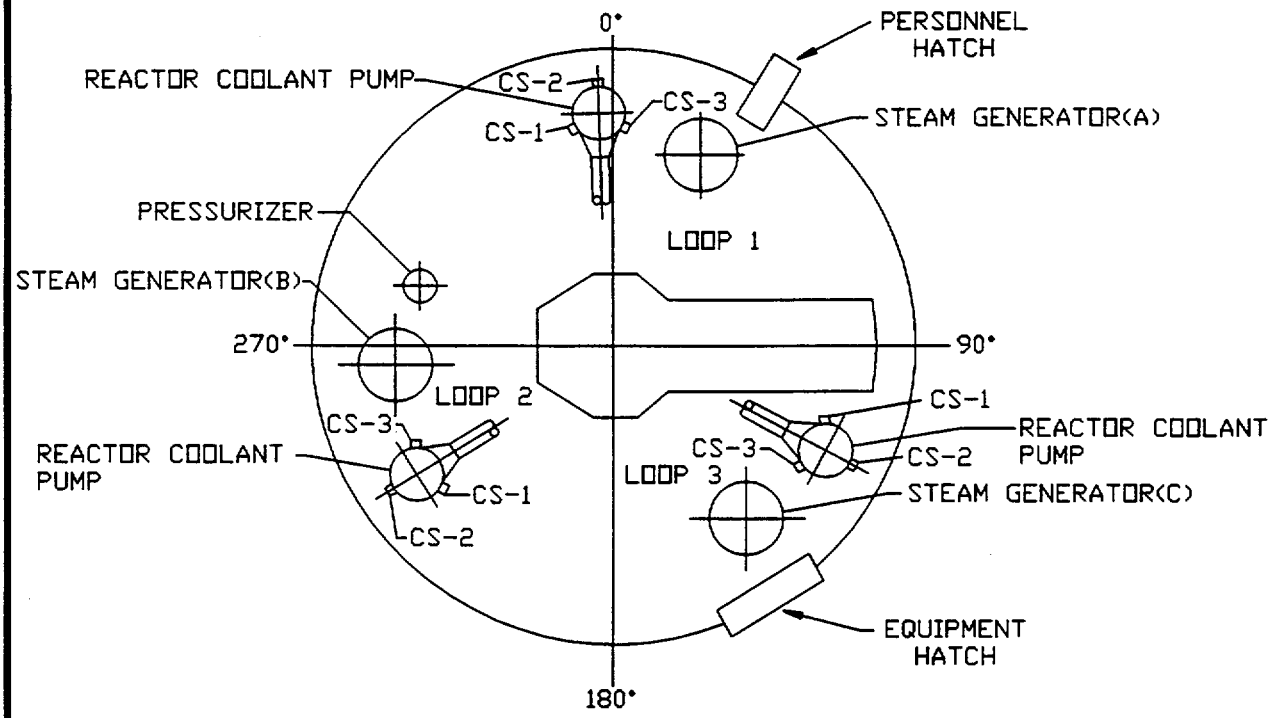

PUMP SUPPORT COMPONENTS

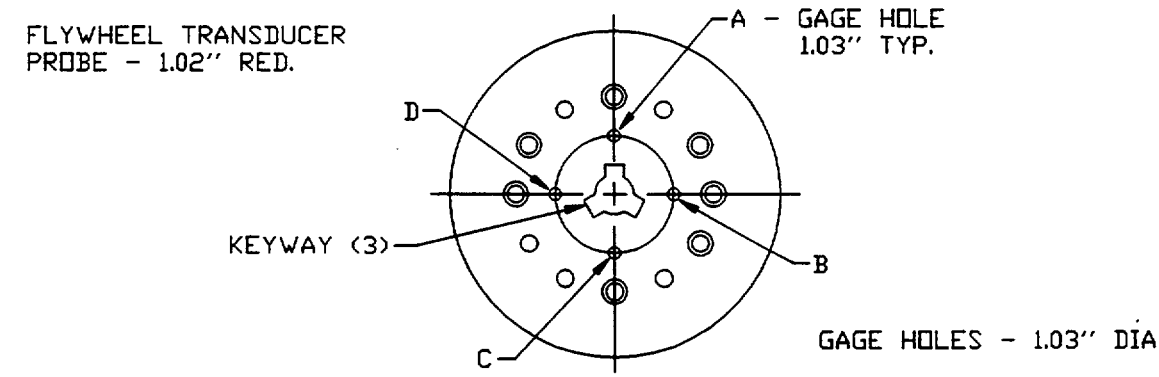

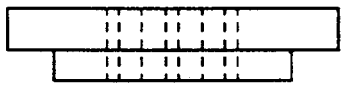

REACTOR COOLANT PUMP FLYWHEEL

REV.	DATE	BY	CHK'D	DESCRIPTION	APPR.1	APPR.2	APPR.3	APPR.4
1	3-26-98	RAW	JAR	REVISED PER REA 96-1295, REV. 0	LDT	DLG DEV		
0	6-30-92	SDH	JAR	ISSUED PER PCN S-92-1-8162.	CAB	CCM for WRH	AH	DML

Southern Company Services, Inc. for REACTOR COOLANT PUMP

ALABAMA POWER COMPANY
JOSEPH M. FARLEY NUCLEAR PLANT
UNIT 1

SCS DRAWING NUMBER	SHEET	REV.
A-351192	65	1

CAD AUTOCAD ALA5100B RAV-02

Farley Nuc t
Visual Examination Record VT-1

SHARED

FNP-0-NDE- 21
Southern Nuclear Operating Company

Plant / Unit	Line Number/Examination Area/Weld No.	Drawing Number	Sheet Number
Farley / 1	ALA1-5100-B25 RC PUMP SEAL HOUSING BOLTING	ALA1-5100	S01F1V028

Photos	Sketch	Resolution	Technique	
☐ Yes ☐ B/W ☑ No ☐ Color	☐ Yes ☑ No	☐ 1/32" Division (Scale) ☑ 1/32" Line (Gray Card)	☑ Direct ☐ Video ☐ Remote	WO / WA N/A Procedure No. FNP-0-NDE-100.21 Revision No. 1.0 / N/A

Equipment	Lighting	Tools			Examiner/Initial Sig.	Level
☑ Mirror ☐ Magnifier ☐ CCTV	☐ Ambient ☑ Flashlight ☐ Droplight	☐ Scale ☐ Micrometer ☐ Caliper	☐ Depth Gauge ☐ Comparator ☐ Weld Gauge	☐ Level ☐ _____ ☐ _____	James F. Halley J. F. Halley	III
					George Morini George Morini	II
					Date (Month-Day-Year) 10/11/01	

☐ WELDS AND BASE MATERIAL VT-1	SAT	*UN-SAT	N/A
Ground Blend Material	☐	☐	☑
Undercut	☐	☐	☑
Corrosion Build-up	☐	☐	☑
Gouges	☐	☐	☑
Evidence of Leakage	☐	☐	☑
Arc Strikes	☐	☐	☑
Cracks	☐	☐	☑
Other**	☐	☐	☑

* Provide details on unsat areas by use of supplemental data sheet.
** Provide details on other areas examined

☑ BOLTS, STUDS, AND WASHERS VT-1	SAT	*UN-SAT	N/A
Loose Members	☐	☐	☑
Cracks	☑	☐	☐
Corrosion	☑	☐	☐
Gouges	☑	☐	☐
Thread Damage	☑	☐	☐
Deformation	☑	☐	☐
Protective Coating	☑	☐	☐
Evidence of Leakage	☑	☐	☐
Other **	☑	☐	☐

Comments EXAMINED IN PLACE

	ANII Review	Date
	C G Ward	10/13/01
Reviewed By Gary R. Lofton	Level III	Date 10-13-01

Revision 1.0

SHARED

Plant / Unit	Line Number/Examination Area/Weld No.	Drawing Number	Sheet Number
Farley / 1	ALA1-5100-B26 RC PUMP SEAL HOUSING BOLTING	ALA1-5100	S01F1V029

Photos	Sketch	Resolution	Technique	
☐ Yes ☐ B/W ☑ No ☐ Color	☐ Yes ☑ No	☐ 1/32" Division (Scale) ☑ 1/32" Line (Gray Card)	☑ Direct ☐ Video ☐ Remote	WO / WA N/A Procedure No. FNP-0-NDE-100.21 Revision No. 1.0 / N/A

Equipment	Lighting	Tools		
☑ Mirror	☐ Ambient	☐ Scale	☐ Depth Gauge	☐ Level
☐ Magnifier	☑ Flashlight	☐ Micrometer	☐ Comparator	☐ _____
☐ CCTV	☐ Droplight	☐ Caliper	☐ Weld Gauge	☐ _____

Examiner/Initial Sig.	Level
James F. Halley	III
George Morini	II

Date (Month-Day-Year) 10/11/01

☐ WELDS AND BASE MATERIAL VT-1	SAT	*UN-SAT	N/A
Ground Blend Material	☐	☐	☑
Undercut	☐	☐	☑
Corrosion Build-up	☐	☐	☑
Gouges	☐	☐	☑
Evidence of Leakage	☐	☐	☑
Arc Strikes	☐	☐	☑
Cracks	☐	☐	☑
Other**	☐	☐	☑

* Provide details on unsat areas by use of supplemental data sheet.
** Provide details on other areas examined

☑ BOLTS, STUDS, AND WASHERS VT-1	SAT	*UN-SAT	N/A
Loose Members	☐	☐	☑
Cracks	☑	☐	☐
Corrosion	☑	☐	☐
Gouges	☑	☐	☐
Thread Damage	☑	☐	☐
Deformation	☑	☐	☐
Protective Coating	☑	☐	☐
Evidence of Leakage	☑	☐	☐
Other **	☑	☐	☐

Comments EXAMINED IN PLACE

	ANII Review	Date
	E G Ward	10/13/01
Reviewed By Darryl Sothen	Level III	Date 10-13-01

Revision 1.0

Plant / Unit	Line Number/Examination Area/Weld No.	Drawing Number	Sheet Number
Farley / 1	ALA1-5100-B27 RC PUMP SEAL HOUSING BOLTING	ALA1-5100	S01F1V030

Photos	Sketch	Resolution	Technique	
☐ Yes ☐ B/W ☑ No ☐ Color	☐ Yes ☑ No	☐ 1/32" Division (Scale) ☑ 1/32" Line (Gray Card)	☑ Direct ☐ Video ☐ Remote	WO / WA N/A Procedure No. FNP-0-NDE-100.21 Revision No. 1.0 / N/A

Equipment	Lighting	Tools		
☑ Mirror	☐ Ambient	☐ Scale	☐ Depth Gauge	☐ Level
☐ Magnifier	☑ Flashlight	☐ Micrometer	☐ Comparator	☐ _____
☐ CCTV	☐ Droplight	☐ Caliper	☐ Weld Gauge	☐ _____

Examiner/Initial Sig.	Level
James F. Halley J. F. Halley	III
George Morini [signature]	II

Date (Month-Day-Year) 10/11/01

☐ WELDS AND BASE MATERIAL VT-1	SAT	*UN-SAT	N/A
Ground Blend Material	☐	☐	☑
Undercut	☐	☐	☑
Corrosion Build-up	☐	☐	☑
Gouges	☐	☐	☑
Evidence of Leakage	☐	☐	☑
Arc Strikes	☐	☐	☑
Cracks	☐	☐	☑
Other**	☐	☐	☑

* Provide details on unsat areas by use of supplemental data sheet.
** Provide details on other areas examined

☑ BOLTS, STUDS, AND WASHERS VT-1	SAT	*UN-SAT	N/A
Loose Members	☐	☐	☑
Cracks	☑	☐	☐
Corrosion	☑	☐	☐
Gouges	☑	☐	☐
Thread Damage	☑	☐	☐
Deformation	☑	☐	☐
Protective Coating	☑	☐	☐
Evidence of Leakage	☑	☐	☐
Other **	☑	☐	☐

Comments EXAMINED IN PLACE

	ANII Review	Date
	[signature]	10/13/01
Reviewed By [signature]	Level III	Date 10-13-01

SHARED

Plant / Unit	Line Number/Examination Area/Weld No.	Drawing Number	Sheet Number
Farley / 1	ALA1-5100-B28 RC PUMP SEAL HOUSING BOLTING	ALA1-5100	S01F1V031

Photos	Sketch	Resolution	Technique	
☐ Yes ☐ B/W ☑ No ☐ Color	☐ Yes ☑ No	☐ 1/32" Division (Scale) ☑ 1/32" Line (Gray Card)	☑ Direct ☐ Video ☐ Remote	WO / WA N/A Procedure No. FNP-0-NDE-100.21 Revision No. 1.0 / N/A

Equipment	Lighting	Tools		
☑ Mirror ☐ Magnifier ☐ CCTV	☐ Ambient ☑ Flashlight ☐ Droplight	☐ Scale ☐ Depth Gauge ☐ Level ☐ Micrometer ☐ Comparator ☐ _____ ☐ Caliper ☐ Weld Gauge ☐ _____		

Examiner/Initial Sig.	Level
James F. Halley	III
George Morini	II

Date (Month-Day-Year) 10/11/01

☐ WELDS AND BASE MATERIAL VT-1	SAT	*UN-SAT	N/A
Ground Blend Material	☐	☐	☑
Undercut	☐	☐	☑
Corrosion Build-up	☐	☐	☑
Gouges	☐	☐	☑
Evidence of Leakage	☐	☐	☑
Arc Strikes	☐	☐	☑
Cracks	☐	☐	☑
Other**	☐	☐	☑

* Provide details on unsat areas by use of supplemental data sheet.
** Provide details on other areas examined

☑ BOLTS, STUDS, AND WASHERS VT-1	SAT	*UN-SAT	N/A
Loose Members	☐	☐	☑
Cracks	☑	☐	☐
Corrosion	☑	☐	☐
Gouges	☑	☐	☐
Thread Damage	☑	☐	☐
Deformation	☑	☐	☐
Protective Coating	☑	☐	☐
Evidence of Leakage	☑	☐	☐
Other **	☑	☐	☐

Comments EXAMINED IN PLACE

	ANII Review	Date
	C G Wood	10/13/01
Reviewed By	Level	Date
Henry A. Loftus	III	10-13-01

SHARED

Plant / Unit	Line Number/Examination Area/Weld No.	Drawing Number	Sheet Number
Farley / 1	ALA1-5100-B29 RC PUMP SEAL HOUSING BOLTING	ALA1-5100	S01F1V032

Photos	Sketch	Resolution	Technique	
☐ Yes ☐ B/W ☑ No ☐ Color	☐ Yes ☑ No	☐ 1/32" Division (Scale) ☑ 1/32" Line (Gray Card)	☑ Direct ☐ Video ☐ Remote	WO / WA N/A Procedure No. FNP-0-NDE-100.21 Revision No. 1.0 / N/A

Equipment	Lighting	Tools			Examiner/Initial Sig.	Level
☑ Mirror ☐ Magnifier ☐ CCTV	☐ Ambient ☑ Flashlight ☐ Droplight	☐ Scale ☐ Micrometer ☐ Caliper	☐ Depth Gauge ☐ Comparator ☐ Weld Gauge	☐ Level ☐ _____ ☐ _____	James F. Halley J. F. Halley	III
					George Morini	II
					Date (Month-Day-Year) 10/11/01	

☐ WELDS AND BASE MATERIAL VT-1	SAT	*UN-SAT	N/A
Ground Blend Material	☐	☐	☑
Undercut	☐	☐	☑
Corrosion Build-up	☐	☐	☑
Gouges	☐	☐	☑
Evidence of Leakage	☐	☐	☑
Arc Strikes	☐	☐	☑
Cracks	☐	☐	☑
Other**	☐	☐	☑

* Provide details on unsat areas by use of supplemental data sheet.
** Provide details on other areas examined

☑ BOLTS, STUDS, AND WASHERS VT-1	SAT	*UN-SAT	N/A
Loose Members	☐	☐	☑
Cracks	☑	☐	☐
Corrosion	☑	☐	☐
Gouges	☑	☐	☐
Thread Damage	☑	☐	☐
Deformation	☑	☐	☐
Protective Coating	☑	☐	☐
Evidence of Leakage	☑	☐	☐
Other **	☑	☐	☐

Comments EXAMINED IN PLACE

	ANII Review	Date
Reviewed By Danny R. Lotter	E G Wood	10/13/01
	Level III	Date 10-13-01

Revision 1.0

SHARED

Plant / Unit	Line Number/Examination Area/Weld No.	Drawing Number	Sheet Number
Farley / 1	ALA1-5100-B30 RC PUMP SEAL HOUSING BOLTING	ALA1-5100	S01F1V033

Photos	Sketch	Resolution	Technique	
☐ Yes ☐ B/W ☑ No ☐ Color	☐ Yes ☑ No	☐ 1/32" Division (Scale) ☑ 1/32" Line (Gray Card)	☑ Direct ☐ Video ☐ Remote	WO / WA N/A Procedure No. FNP-0-NDE-100.21 Revision No. 1.0 / N/A

Equipment	Lighting	Tools			Examiner/Initial Sig.	Level
☑ Mirror ☐ Magnifier ☐ CCTV	☐ Ambient ☑ Flashlight ☐ Droplight	☐ Scale ☐ Micrometer ☐ Caliper	☐ Depth Gauge ☐ Comparator ☐ Weld Gauge	☐ Level ☐ _____ ☐ _____	James F. Halley J. F. Halley	III
					George Morini George Morini	II
					Date (Month-Day-Year) 10/11/01	

☐ WELDS AND BASE MATERIAL VT-1	SAT	*UN-SAT	N/A
Ground Blend Material	☐	☐	☑
Undercut	☐	☐	☑
Corrosion Build-up	☐	☐	☑
Gouges	☐	☐	☑
Evidence of Leakage	☐	☐	☑
Arc Strikes	☐	☐	☑
Cracks	☐	☐	☑
Other**	☐	☐	☑

* Provide details on unsat areas by use of supplemental data sheet.
** Provide details on other areas examined

☑ BOLTS, STUDS, AND WASHERS VT-1	SAT	*UN-SAT	N/A
Loose Members	☐	☐	☑
Cracks	☑	☐	☐
Corrosion	☑	☐	☐
Gouges	☑	☐	☐
Thread Damage	☑	☐	☐
Deformation	☑	☐	☐
Protective Coating	☑	☐	☐
Evidence of Leakage	☑	☐	☐
Other **	☑	☐	☐

Comments EXAMINED IN PLACE

	ANII Review	C G [illegible]	Date 10/13/01
Reviewed By [illegible]	Level III		Date 10-13-01

Farley Nuc[illegible] t
Visual Examination Record VT-1

SHARED

FNP-0-ND[illegible]- 21
Southern Nuclear Operating Company

Plant / Unit	Line Number/Examination Area/Weld No.	Drawing Number	Sheet Number
Farley / 1	ALA1-5100-B31 RC PUMP SEAL HOUSING BOLTING	ALA1-5100	S01F1V034

Photos	Sketch	Resolution	Technique	
☐ Yes ☐ B/W ☑ No ☐ Color	☐ Yes ☑ No	☐ 1/32" Division (Scale) ☑ 1/32" Line (Gray Card)	☑ Direct ☐ Video ☐ Remote	WO / WA N/A Procedure No. FNP-0-NDE-100.21 Revision No. 1.0 / N/A

Equipment	Lighting	Tools		
☑ Mirror ☐ Magnifier ☐ CCTV	☐ Ambient ☑ Flashlight ☐ Droplight	☐ Scale ☐ Depth Gauge ☐ Level ☐ Micrometer ☐ Comparator ☐ _____ ☐ Caliper ☐ Weld Gauge ☐ _____		

Examiner/Initial Sig.	Level
James F. Halley	III
George Morini	II

Date (Month-Day-Year) 10/11/01

☐ WELDS AND BASE MATERIAL VT-1	SAT	*UN-SAT	N/A
Ground Blend Material	☐	☐	☑
Undercut	☐	☐	☑
Corrosion Build-up	☐	☐	☑
Gouges	☐	☐	☑
Evidence of Leakage	☐	☐	☑
Arc Strikes	☐	☐	☑
Cracks	☐	☐	☑
Other**	☐	☐	☑

* Provide details on unsat areas by use of supplemental data sheet.
** Provide details on other areas examined

☑ BOLTS, STUDS, AND WASHERS VT-1	SAT	*UN-SAT	N/A
Loose Members	☐	☐	☑
Cracks	☑	☐	☐
Corrosion	☑	☐	☐
Gouges	☑	☐	☐
Thread Damage	☑	☐	☐
Deformation	☑	☐	☐
Protective Coating	☑	☐	☐
Evidence of Leakage	☑	☐	☐
Other **	☑	☐	☐

Comments EXAMINED IN PLACE

	ANII Review	Date
	[illegible]	10/13/01
Reviewed By [illegible]	Level III	Date 10-13-01

Revision 1.0

Farley Nuc... t
Visual Examination Record VT-1

SHARED

FNP-0-NDE- 21
Southern Nuclear Operating Company

Plant / Unit	Line Number/Examination Area/Weld No.	Drawing Number	Sheet Number
Farley / 1	ALA1-5100-B32 RC PUMP SEAL HOUSING BOLTING	ALA1-5100	S01F1V035

Photos	Sketch	Resolution	Technique
☐ Yes ☐ B/W ☑ No ☐ Color	☐ Yes ☑ No	☐ 1/32" Division (Scale) ☑ 1/32" Line (Gray Card)	☑ Direct ☐ Video ☐ Remote

WO / WA N/A
Procedure No. FNP-0-NDE-100.21
Revision No. 1.0 / N/A

Equipment	Lighting	Tools	
☑ Mirror	☐ Ambient	☐ Scale ☐ Depth Gauge ☐ Level	
☐ Magnifier	☑ Flashlight	☐ Micrometer ☐ Comparator ☐ _____	
☐ CCTV	☐ Droplight	☐ Caliper ☐ Weld Gauge ☐ _____	

Examiner/Initial Sig.	Level
James F. Halley	III
George Morini	II

Date (Month-Day-Year) 10/11/01

☐ WELDS AND BASE MATERIAL VT-1	SAT	*UN-SAT	N/A
Ground Blend Material	☐	☐	☑
Undercut	☐	☐	☑
Corrosion Build-up	☐	☐	☑
Gouges	☐	☐	☑
Evidence of Leakage	☐	☐	☑
Arc Strikes	☐	☐	☑
Cracks	☐	☐	☑
Other**	☐	☐	☑

* Provide details on unsat areas by use of supplemental data sheet.
** Provide details on other areas examined

☑ BOLTS, STUDS, AND WASHERS VT-1	SAT	*UN-SAT	N/A
Loose Members	☐	☐	☑
Cracks	☑	☐	☐
Corrosion	☑	☐	☐
Gouges	☑	☐	☐
Thread Damage	☑	☐	☐
Deformation	☑	☐	☐
Protective Coating	☑	☐	☐
Evidence of Leakage	☑	☐	☐
Other **	☑	☐	☐

Comments EXAMINED IN PLACE

	ANII Review C G Ward	Date 10/13/01
Reviewed By	Level III	Date 10-13-01

Revision 1.0

Farley Nuc t
Visual Examination Record VT-1

SHARED

FNP-0-NDE- 21
Southern Nuclear Operating Company

Plant / Unit	Line Number/Examination Area/Weld No.	Drawing Number	Sheet Number
Farley / 1	ALA1-5100-B33 RC PUMP SEAL HOUSING BOLTING	ALA1-5100	S01F1V036

Photos	Sketch	Resolution	Technique	
☐ Yes ☐ B/W ☑ No ☐ Color	☐ Yes ☑ No	☐ 1/32" Division (Scale) ☑ 1/32" Line (Gray Card)	☑ Direct ☐ Video ☐ Remote	WO / WA N/A Procedure No. FNP-0-NDE-100.21 Revision No. 1.0 / N/A

Equipment	Lighting	Tools			Examiner/Initial Sig.	Level
☑ Mirror ☐ Magnifier ☐ CCTV	☐ Ambient ☑ Flashlight ☐ Droplight	☐ Scale ☐ Micrometer ☐ Caliper	☐ Depth Gauge ☐ Comparator ☐ Weld Gauge	☐ Level ☐ _____ ☐ _____	James F. Halley J. F. Halley	III
					Examiner/Initial Sig. George Morini [signature]	II
					Date (Month-Day-Year) 10/11/01	

☐ WELDS AND BASE MATERIAL VT-1	SAT	*UN-SAT	N/A
Ground Blend Material	☐	☐	☑
Undercut	☐	☐	☑
Corrosion Build-up	☐	☐	☑
Gouges	☐	☐	☑
Evidence of Leakage	☐	☐	☑
Arc Strikes	☐	☐	☑
Cracks	☐	☐	☑
Other**	☐	☐	☑

* Provide details on unsat areas by use of supplemental data sheet.
** Provide details on other areas examined

☑ BOLTS, STUDS, AND WASHERS VT-1	SAT	*UN-SAT	N/A
Loose Members	☐	☐	☑
Cracks	☑	☐	☐
Corrosion	☑	☐	☐
Gouges	☑	☐	☐
Thread Damage	☑	☐	☐
Deformation	☑	☐	☐
Protective Coating	☑	☐	☐
Evidence of Leakage	☑	☐	☐
Other **	☑	☐	☐

Comments EXAINED IN PLACE

	ANII Review	C Gwinnell	Date 10/13/01
Reviewed By Gary A. Lofton	Level	III	Date 10-13-01

Revision 1.0

Farley Nuc[illegible]t
Visual Examination Record VT-1

SHARED

FNP-0-NDE-[illegible].21
Southern Nuclear Operating Company

Plant / Unit	Line Number/Examination Area/Weld No.	Drawing Number	Sheet Number
Farley / 1	ALA1-5100-B34 RC PUMP SEAL HOUSING BOLTING	ALA1-5100	S01F1V037

Photos	Sketch	Resolution	Technique	
☐ Yes ☐ B/W ☑ No ☐ Color	☐ Yes ☑ No	☐ 1/32" Division (Scale) ☑ 1/32" Line (Gray Card)	☑ Direct ☐ Video ☐ Remote	WO / WA N/A Procedure No. FNP-0-NDE-100.21 Revision No. 1.0 / N/A

Equipment	Lighting	Tools		
☑ Mirror ☐ Magnifier ☐ CCTV	☐ Ambient ☑ Flashlight ☐ Droplight	☐ Scale ☐ Depth Gauge ☐ Level ☐ Micrometer ☐ Comparator ☐ _____ ☐ Caliper ☐ Weld Gauge ☐ _____		

Examiner/Initial Sig.	Level
James F. Halley	III
George Morini	II

Date (Month-Day-Year) 10/11/01

☐ WELDS AND BASE MATERIAL VT-1	SAT	*UN-SAT	N/A
Ground Blend Material	☐	☐	☑
Undercut	☐	☐	☑
Corrosion Build-up	☐	☐	☑
Gouges	☐	☐	☑
Evidence of Leakage	☐	☐	☑
Arc Strikes	☐	☐	☑
Cracks	☐	☐	☑
Other**	☐	☐	☑

* Provide details on unsat areas by use of supplemental data sheet.
** Provide details on other areas examined

☑ BOLTS, STUDS, AND WASHERS VT-1	SAT	*UN-SAT	N/A
Loose Members	☐	☐	☑
Cracks	☑	☐	☐
Corrosion	☑	☐	☐
Gouges	☑	☐	☐
Thread Damage	☑	☐	☐
Deformation	☑	☐	☐
Protective Coating	☑	☐	☐
Evidence of Leakage	☑	☐	☐
Other **	☑	☐	☐

Comments EXAMINED IN PLACE

		ANII Review	Date 10/13/01
Reviewed By		Level III	Date 10-13-01

Revision 1.0

SHARED

Plant / Unit	Line Number/Examination Area/Weld No.	Drawing Number	Sheet Number
Farley / 1	ALA1-5100-B35 RC PUMP SEAL HOUSING BOLTING	ALA1-5100	S01F1V038

Photos	Sketch	Resolution	Technique	
☐ Yes ☐ B/W ☑ No ☐ Color	☐ Yes ☑ No	☐ 1/32" Division (Scale) ☑ 1/32" Line (Gray Card)	☑ Direct ☐ Video ☐ Remote	WO / WA N/A Procedure No. FNP-0-NDE-100.21 Revision No. 1.0 / N/A

Equipment	Lighting	Tools		
☑ Mirror ☐ Magnifier ☐ CCTV	☐ Ambient ☑ Flashlight ☐ Droplight	☐ Scale ☐ Depth Gauge ☐ Level ☐ Micrometer ☐ Comparator ☐ _____ ☐ Caliper ☐ Weld Gauge ☐ _____		

Examiner/Initial Sig.	Level
James F. Halley	III
George Morini	II

Date (Month-Day-Year) 10/11/01

☐ WELDS AND BASE MATERIAL VT-1	SAT	*UN-SAT	N/A
Ground Blend Material	☐	☐	☑
Undercut	☐	☐	☑
Corrosion Build-up	☐	☐	☑
Gouges	☐	☐	☑
Evidence of Leakage	☐	☐	☑
Arc Strikes	☐	☐	☑
Cracks	☐	☐	☑
Other**	☐	☐	☑

* Provide details on unsat areas by use of supplemental data sheet.
** Provide details on other areas examined

☑ BOLTS, STUDS, AND WASHERS VT-1	SAT	*UN-SAT	N/A
Loose Members	☐	☐	☑
Cracks	☑	☐	☐
Corrosion	☑	☐	☐
Gouges	☑	☐	☐
Thread Damage	☑	☐	☐
Deformation	☑	☐	☐
Protective Coating	☑	☐	☐
Evidence of Leakage	☑	☐	☐
Other **	☑	☐	☐

Comments EXAMINED IN PLACE

	ANII Review C Guard	Date 10/13/01
Reviewed By Gary A. Lofton	Level III	Date 10-13-01

SHARED

Plant / Unit	Line Number/Examination Area/Weld No.	Drawing Number	Sheet Number
Farley / 1	ALA1-5100-B36 RC PUMP SEAL HOUSING BOLTING	ALA1-5100	S01F1V039

Photos	Sketch	Resolution	Technique	WO / WA
☐ Yes ☐ B/W ☑ No ☐ Color	☐ Yes ☑ No	☐ 1/32" Division (Scale) ☑ 1/32" Line (Gray Card)	☑ Direct ☐ Video ☐ Remote	N/A
				Procedure No. FNP-0-NDE-100.21
				Revision No. 1.0 / N/A

Equipment	Lighting	Tools			Examiner/Initial Sig.	Level
☑ Mirror	☐ Ambient	☐ Scale	☐ Depth Gauge	☐ Level	James F. Halley	III
☐ Magnifier	☑ Flashlight	☐ Micrometer	☐ Comparator	☐	Examiner/Initial George Morini Sig.	II
☐ CCTV	☐ Droplight	☐ Caliper	☐ Weld Gauge	☐	Date (Month-Day-Year) 10/11/01	

☐ WELDS AND BASE MATERIAL VT-1	SAT	*UN-SAT	N/A
Ground Blend Material	☐	☐	☑
Undercut	☐	☐	☑
Corrosion Build-up	☐	☐	☑
Gouges	☐	☐	☑
Evidence of Leakage	☐	☐	☑
Arc Strikes	☐	☐	☑
Cracks	☐	☐	☑
Other**	☐	☐	☑

* Provide details on unsat areas by use of supplemental data sheet.
** Provide details on other areas examined

☑ BOLTS, STUDS, AND WASHERS VT-1	SAT	*UN-SAT	N/A
Loose Members	☐	☐	☑
Cracks	☑	☐	☐
Corrosion	☑	☐	☐
Gouges	☑	☐	☐
Thread Damage	☑	☐	☐
Deformation	☑	☐	☐
Protective Coating	☑	☐	☐
Evidence of Leakage	☑	☐	☐
Other **	☑	☐	☐

Comments EXAMINED IN PLACE

	ANII Review	Date
	C G Wm d	10/13/01
Reviewed By	Level III	Date 10-13-01

Farley Nuclear Plant
Liquid Penetrant Examination Record

SHARED

FNP-0-NDE-100.5
PT-F-FORM 001
Southern Nuclear Operating Company

Unit	Component Number	Procedure/Rev./TCN	Sheet No.
1	ALA1-5100-FW1	FNP-0-NDE-100.5 / 6.0 / N/A	S01F1P007 Page 1 of 1

Thermometer

Mfg/Ser. No. PTC / 43880
Cal. Due Date 2/25/02

Surface Temp. 81 o F

Manufacturer Magnaflux

Penetrant Materials

	Type	Batch
Cleaner / Remover	SKC-S	99J01K
Penetrant	SKL-SP	96J02K
Developer	SKD-S2	98D11K

Component Configuration
RC PUMP FLYWHEEL

% of Length Coverage 100%
% of Area Coverage 100%

Date 10/16/01

Ind. No.	Results	Dwell Time	Indication Desc. / Exam Limitations / etc.	Remarks
N/A	NRI	15	N/A	EXAMINATION OF KEYWAYS

Augmented Examination Sol 10-17-01

Primary Examiner	ASNT Level	Initials	Assistant Examiner	ASNT Level	Initials	Non-Technical Review	Date
James F. Halley	III	JFH	N/A	N/A		Lynda Duke	10-17-01

SNC NDE Level II/III Review		Date	Percentage of Code Coverage	ANII Review	Date
[illegible]	III	10-17-01	N/A	N/A	N/A

Revision 6.

EXAMINATION SUMMARY
FOR UNIT 1
INTERVAL 3 PERIOD 2 OUTAGE 1

DRAWING ALA1-5200
REACTOR COOLANT PUMP B

ITEM NO	VOLUMERIC			SURFACE			VISUAL			REMARKS
	NI	NRI	RI	NI	NRI	RI	NI	NRI	RI	
CS-1							X			
CS-2							X			
CS-3							X			

CONTAINMENT

ALA1-5200

REACTOR COOLANT PUMP B

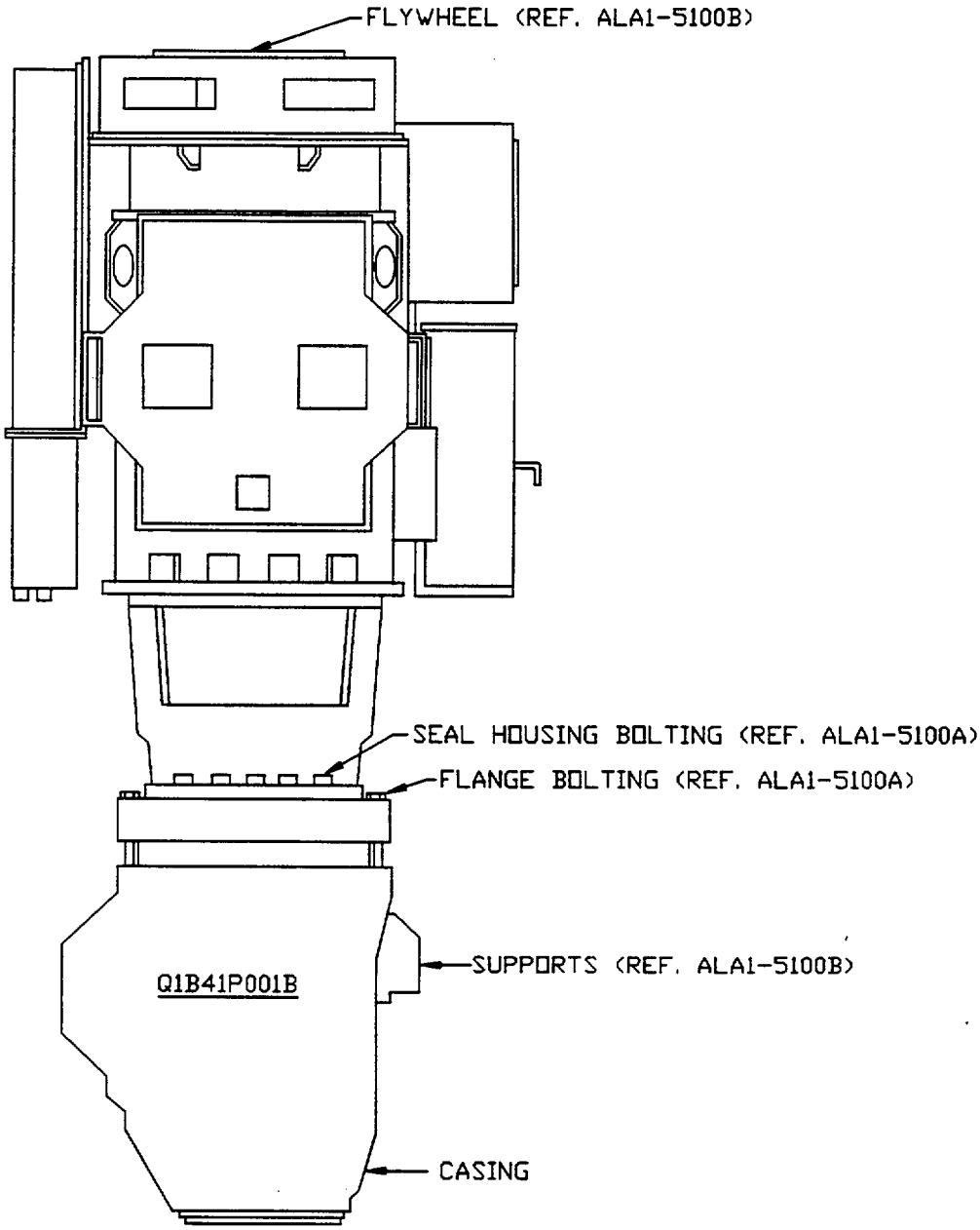

REV.	DATE	BY	CHK'D	DESCRIPTION	APPR.1	APPR.2	APPR.3	APPR.4
1	3-26-98	RAW	JAR	REVISED PER REA 96-1295, REV. 0	LDT	DLG for DEW		
0	6-30-92	SDH	JAR	ISSUED PER PCN S-92-1-8162.	CAB	CCM for WRH	AH	DML

Southern Company Services, Inc. for REACTOR COOLANT PUMP

ALABAMA POWER COMPANY
JOSEPH M. FARLEY NUCLEAR PLANT
UNIT 1

SCS DRAWING NUMBER	SHEET	REV.
A-351192	66	1

CAD AUTOCAD ALA15200 RAV-02

Farley Nuclear Plant
Support Examination Record VT-3

SHARED

FNP-0-NDE-100.23
Southern Nuclear Operating Company

Plant/ Unit	System/Support No	WO/WA/STP	Sheet No.
Farley / 1	ALA1-5200-CS-1	N/A	S01F1V057

Hanger Type	Type Exam/Technique	Procedure/Version	Exam Date
REACTOR COOLANT PUMP B Q1B41P001B	VT-3 / Direct	FNP-0-NDE-100.23 / 5.0 / N/A	10/14/01

Examiner Signature	Level	Resolution	Tools
Paul DiValerio	II	1/32" Division (Scale) ☑	FLASHLIGHT, MIRROR, SCALE
Examiner Signature: N/A	Level:	1/32" Line (Gray Card) ☐	

EXAMINATION LIST:

	Acceptable/ Unacceptable/ NA
Deformation or structural degradation of fasteners, springs, clamps, or other support items.	Acceptable
Missing, detached, or loosened support items.	Acceptable
Arc strikes, weld spatter, paint scoring, roughness, or general corrosion on close tolerance machined or sliding surfaces or on the wire strands of Wear devices.	N/A
Any crack or linear indication.	Acceptable
Fluid loss or lack of fluid indication (hydraulic snubber only).	N/A
Other conditions	N/A
Spring Can Hot and Cold Positions (draw sketch)	Time of Exam N/A — N/A
Constant Spring Hanger (Sketch setting of pointer and setting location of the hot (red) and cold (white) stickers)	
Identification Plate Calibrated Load Setting	N/A

Sketch (if applicable)

Comments:

N/A

NDE Level II/III Review	Date:	ANII Review	Date:
Dan R. Rothrock III	10-16-01	[illegible]	10/16/01

Farley Nuclear Plant
Support Examination Record VT-3

SHARED

FNP-0-NDE-100.23
Southern Nuclear Operating Company

Plant/ Unit	System/Support No	WO/WA/STP	Sheet No.
Farley / 1	ALA1-5200-CS-2	N/A	S01F1V058

Hanger Type	Type Exam/Technique	Procedure/Version	Exam Date
REACTOR COOLANT PUMP B Q1B41P001B	VT-3 / Direct	FNP-0-NDE-100.23 / 5.0 / N/A	10/14/01

Examiner Signature	Level	Resolution	Tools
Paul DiValerio	II	1/32" Division (Scale) ☑	FLASHLIGHT, MIRROR, SCALE
Examiner Signature	**Level**	1/32" Line (Gray Card) ☐	
N/A			

EXAMINATION LIST:

	Acceptable/ Unacceptable/ NA
Deformation or structural degradation of fasteners, springs, clamps, or other support items.	Acceptable
Missing, detached, or loosened support items.	Acceptable
Arc strikes, weld spatter, paint scoring, roughness, or general corrosion on close tolerance machined or sliding surfaces or on the wire strands of Wear devices.	N/A
Any crack or linear indication.	Acceptable
Fluid loss or lack of fluid indication (hydraulic snubber only).	N/A
Other conditions	N/A
Spring Can Hot and Cold Positions (draw sketch)	Time of Exam N/A — N/A
Constant Spring Hanger (Sketch setting of pointer and setting location of the hot (red) and cold (white) stickers)	
Identification Plate Calibrated Load Setting	N/A

Sketch (if applicable)

Comments:

N/A

NDE Level II/III Review	Date:	ANII Review	Date:
III	10-16-01		10/16/01

Version 5.0

Farley Nuclear Plant
Support Examination Record VT-3

SHARED

FNP-0-NDE-100.23
Southern Nuclear Operating Company

Plant/ Unit	System/Support No	WO/WA/STP	Sheet No.
Farley / 1	ALA1-5200-CS-3	N/A	S01F1V059

Hanger Type	Type Exam/Technique	Procedure/Version	Exam Date
REACTOR COOLANT PUMP B Q1B41P001B	VT-3 / Direct	FNP-0-NDE-100.23 / 5.0 / N/A	10/14/01

Examiner Signature	Level	Resolution		Tools
Paul DiValerio	II	1/32" Division (Scale)	☑	FLASHLIGHT, MIRROR, SCALE
Examiner Signature	**Level**	1/32" Line (Gray Card)	☐	
N/A				

EXAMINATION LIST:

	Acceptable/ Unacceptable/ NA
Deformation or structural degradation of fasteners, springs, clamps, or other support items.	Acceptable
Missing, detached, or loosened support items.	Acceptable
Arc strikes, weld spatter, paint scoring, roughness, or general corrosion on close tolerance machined or sliding surfaces or on the wire strands of Wear devices.	N/A
Any crack or linear indication.	Acceptable
Fluid loss or lack of fluid indication (hydraulic snubber only).	N/A
Other conditions	N/A

Spring Can Hot and Cold Positions (draw sketch) — Time of Exam N/A — N/A

Constant Spring Hanger
(Sketch setting of pointer and setting location of the hot (red) and cold (white) stickers)

Identification Plate Calibrated Load Setting N/A

Comments:

N/A

Sketch (if applicable)

NDE Level II/III Review	Date:	ANII Review	Date:
Gary A. Lotten III	10-16-01	C G Ward	10/16/01

Version 5.0