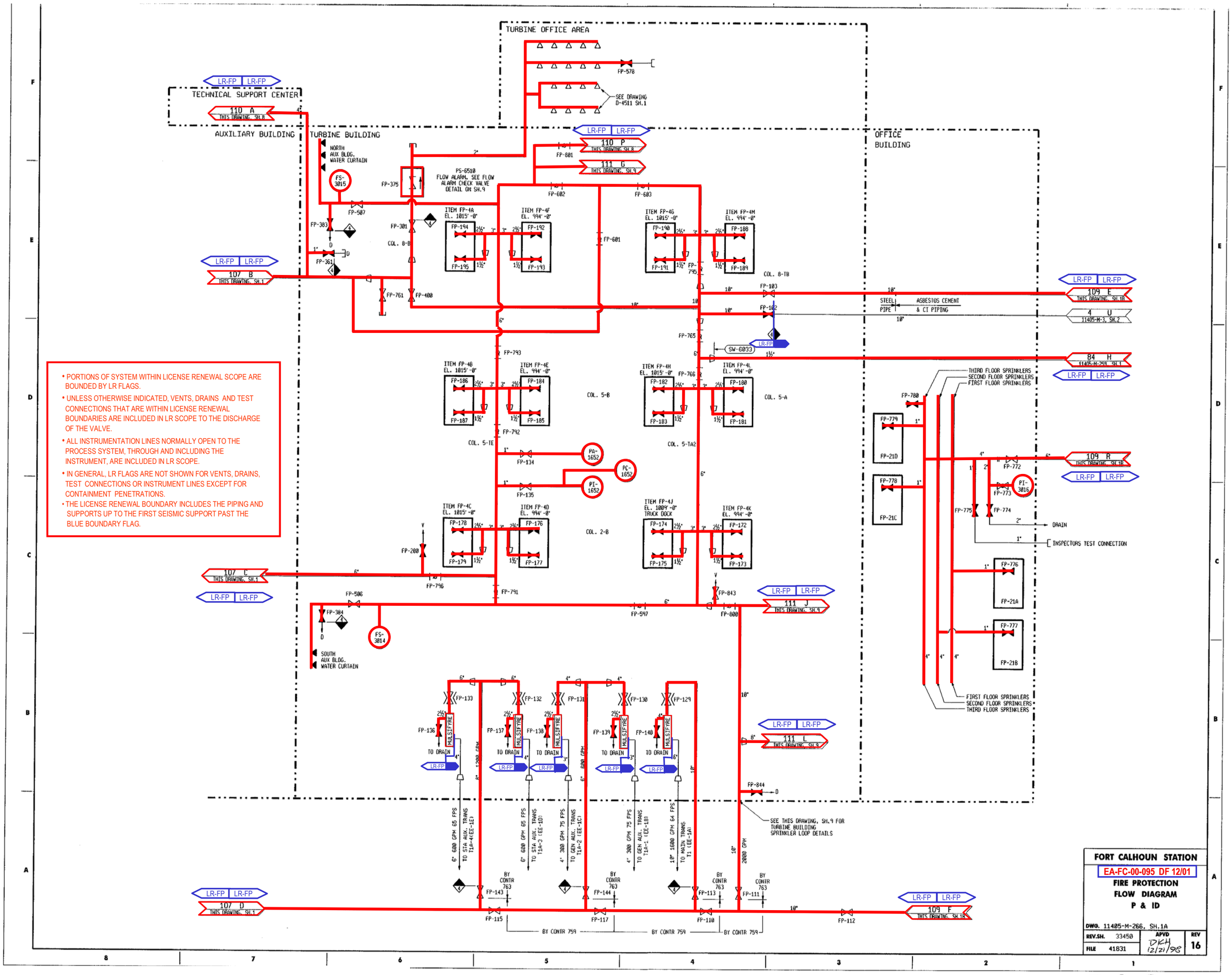

- PORTIONS OF SYSTEM WITHIN LICENSE RENEWAL SCOPE ARE BOUNDED BY LR FLAGS.
- UNLESS OTHERWISE INDICATED, VENTS, DRAINS AND TEST CONNECTIONS THAT ARE WITHIN LICENSE RENEWAL BOUNDARIES ARE INCLUDED IN LR SCOPE TO THE DISCHARGE OF THE VALVE.
- ALL INSTRUMENTATION LINES NORMALLY OPEN TO THE PROCESS SYSTEM, THROUGH AND INCLUDING THE INSTRUMENT, ARE INCLUDED IN LR SCOPE.
- IN GENERAL, LR FLAGS ARE NOT SHOWN FOR VENTS, DRAINS, TEST CONNECTIONS OR INSTRUMENT LINES EXCEPT FOR CONTAINMENT PENETRATIONS.
- THE LICENSE RENEWAL BOUNDARY INCLUDES THE PIPING AND SUPPORTS UP TO THE FIRST SEISMIC SUPPORT PAST THE BLUE BOUNDARY FLAG.

FOR INFORMATION ONLY

NOTE: THIS PRINT IS TO BE USED FOR THE FCS LICENSE RENEWAL PROJECT ONLY. IT MAY NOT REFLECT THE MOST CURRENT REVISION OF THIS DRAWING.