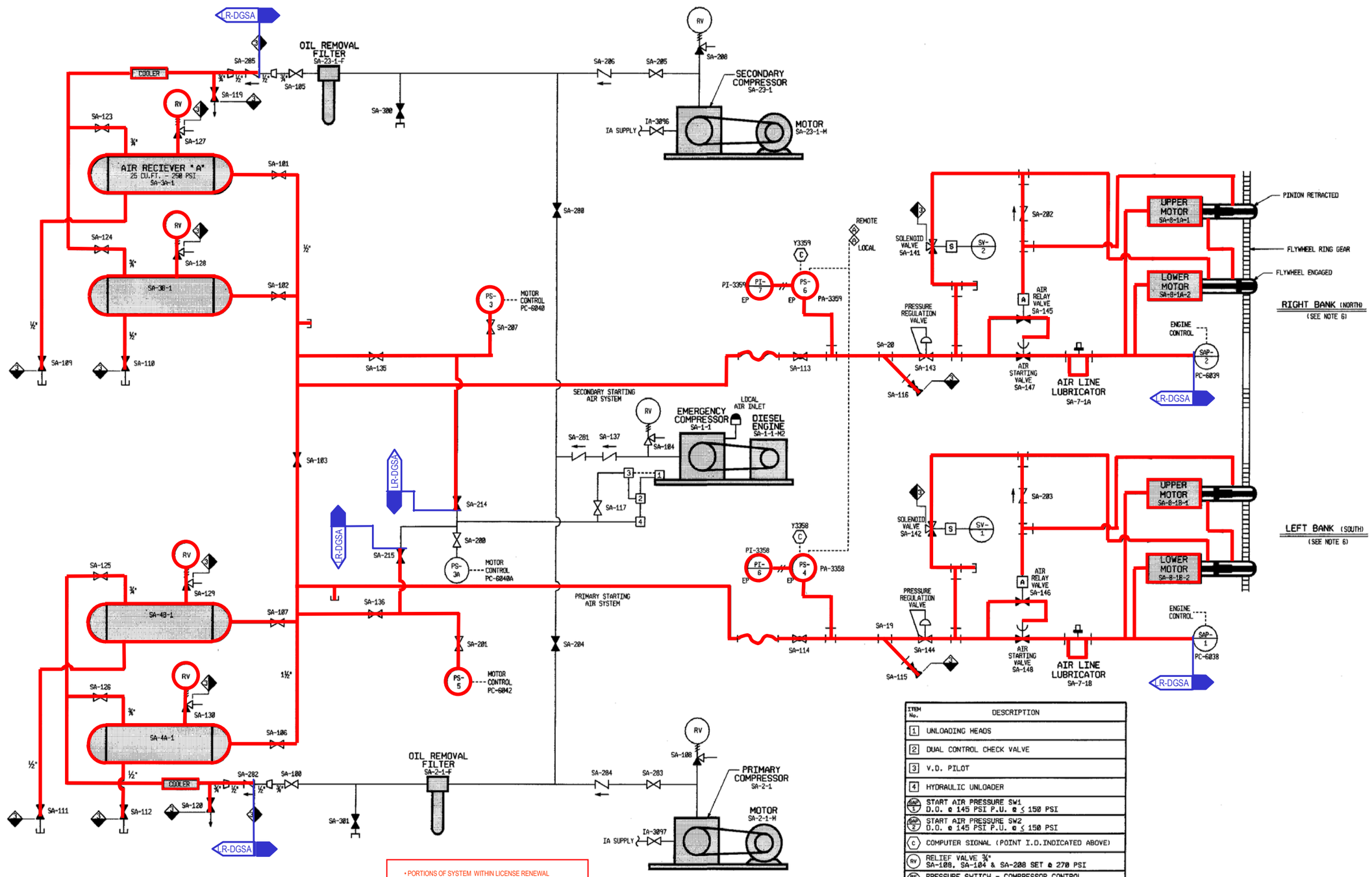

NOTES:

1. ENGINE "LEFT BANK" AND "RIGHT BANK" DESIGNATION IS DETERMINED BY STANDING AT THE REAR OF THE ENGINE (GENERATOR END) AND FACING THE FRONT END OF THE ENGINE (RADIATOR END).
2. REF. OPPD DWG. E-4005, FILE # 16927

- PORTIONS OF SYSTEM WITHIN LICENSE RENEWAL SCOPE ARE BOUNDED BY LR FLAGS.
- UNLESS OTHERWISE INDICATED, VENTS, DRAINS AND TEST CONNECTIONS THAT ARE WITHIN LICENSE RENEWAL BOUNDARIES ARE INCLUDED IN LR SCOPE TO THE DISCHARGE OF THE VALVE.
- ALL INSTRUMENTATION LINES NORMALLY OPEN TO THE PROCESS SYSTEM, THROUGH AND INCLUDING THE INSTRUMENT, ARE INCLUDED IN LR SCOPE.
- IN GENERAL, LR FLAGS ARE NOT SHOWN FOR VENTS, DRAINS, TEST CONNECTIONS OR INSTRUMENT LINES EXCEPT FOR CONTAINMENT PENETRATIONS.
- THE LICENSE RENEWAL BOUNDARY INCLUDES THE PIPING AND SUPPORTS UP TO THE FIRST SEISMIC SUPPORT PAST THE BLUE BOUNDARY FLAG.

ITEM No.	DESCRIPTION
1	UNLOADING HEADS
2	DUAL CONTROL CHECK VALVE
3	V.D. PILOT
4	HYDRAULIC UNLOADER
SAP 1	START AIR PRESSURE SW1 D.O. @ 145 PSI P.U. @ ≤ 150 PSI
SAP 2	START AIR PRESSURE SW2 D.O. @ 145 PSI P.U. @ ≤ 150 PSI
C	COMPUTER SIGNAL (POINT I.D.INDICATED ABOVE)
RV	RELIEF VALVE ¾" SA-108, SA-104 & SA-208 SET @ 270 PSI
PS 6	PRESSURE SWITCH - COMPRESSOR CONTROL SET POINTS - CUT IN 200 PSI, CUT OUT 240 PSI
PS 3	PRESSURE SWITCH - COMPRESSOR CONTROL SET POINTS - CUT IN 200 PSI, CUT OUT 240 PSI
SV 2	SOLENOID VALVE WITH DUMP VENT
SV 1	SOLENOID VALVE WITH DUMP VENT
A	ANNUNICATOR
PI 7	PRESSURE INDICATOR RANGE 0-300 PSI
PI 6	PRESSURE INDICATOR RANGE 0-300 PSI
PS 6	PRESSURE SWITCH - SET POINTS 180 PSI FALLING.
PS 4	PRESSURE SWITCH - SET POINTS 180 PSI FALLING.

EA-FC-00-122 DF 12/01

FORT CALHOUN STATION

STARTING AIR SYSTEM SCHEMATIC DG-1 P & ID

DWG. B120F07001, SH.1
REV.SH. 11
FILE 17390
APVD 7/31/97
REV 31

FOR INFORMATION ONLY

NOTE: THIS PRINT IS TO BE USED FOR THE FCS LICENSE RENEWAL PROJECT ONLY. IT MAY NOT REFLECT THE MOST CURRENT REVISION OF THIS DRAWING.