ONTARIO POWER GENERATION

Engineering Report

Document Number:
N-REP-34320-10000
Revision:
R00

Title:

JET IMPACT TESTS - PRELIMINARY RESULTS AND THEIR APPLICATION

JET IMPACT TESTS - PRELIMINARY RESULTS AND THEIR APPLICATION

N-REP-34320-10000-R00

April 18, 2001

Prepared by:

John Russell
Senior Design Engineer
Primary and Safety Systems
MSED

Reviewed by:

E. Mistele
Senior Design Specialist
Primary and Safety Systems
MSED

Reviewed by:

G. Zakaib
Section Manager
Primary and Safety Systems
MSED

Reviewed by:

R. Sauve
Principal Research Engineer
Kinectrics

Approved by:

W. Kitscha
Manager
Mechanical Systems & Equipment Department

Engineering Report	Document Number: N-REP-34320-10000
	Revision: R00

Title:

JET IMPACT TESTS - PRELIMINARY RESULTS AND THEIR APPLICATION

☐	Calculation	**Nuclear Unit 0**
✓	Report	
☐	Vendor Calculation	
☐	Revision	

System Name or SCI Number:	
System Component or Structure:	
Calculation or Report for:	
Method of Analysis	
Computer Code Used:	
Method of Verification:	

Synopsis:	

Installation Verification Preparer (Print and Sign)	
☐	Calculation Accurately Reflects Plant Configuration or
☐	N/A – Does not Affect Plant Configuration

Executive Summary

This is an interim report on the jet impact test program which was initiated to provide a better understanding of insulation damage mechanisms resulting from fluid emanating from a broken PHT pipe. This is one of the testing programs in support of ECI strainer issues. The jet impact tests performed to date are specifically for freely expanding jets impacting on aluminum clad calcium silicate insulation located on a separate pipe. Results have shown that the orientation of the seam to the jet is a critical factor to be considered. The observed damage mode has exclusively been shearing of the cladding and, with this mode of failure, it has been shown that the test results can be scaled to larger pipe breaks and targets. A numerical method for applying the test results to both small (feeder) and large (PHT piping) sized breaks for limited as-tested conditions is presented.

Adding a second layer of cladding has resulted in a very favourable reduction in the distance where damage occurs. This is expected because the susceptible mode of failure is eliminated by staggering the longitudinal seams to ensure that the jet cannot impact both seams. The effect of jet reflections on reducing the energy and hence the destructive forces of the jet, the so-called congested area, has not yet been determined.

The key recommendations made are as follows:

- It is recommended that for calcium silicate insulated pipes in the configurations addressed by this study, the debris generation assessment methodology be revised to take advantage of the reduction in the conservatism identified in this report. Specifically within a ZOI the fraction of particulate and debris was found to be significantly less than 100%.

- The methodology presented in this report for applying the test results to uncongested areas should be refined to account for a congested ZOI.

- The potential over-conservatism due to focussing of pressure waves in the empty piping downstream of the rupture discs should be further investigated either by analysis or testing.

- The test program for calcium silicate should be continued to assess/confirm the following:
  - effects of congestion,
  - the lateral extent of the zone of influence for tests under 11D,
  - the scaling effect for a smaller nozzle
  - the applicability of the correlations
  - the mode of failure, ZOI, and debris size distribution for jet impact on broken pipe (axial impact).
  - The effectiveness of standard aluminium cladding as an over-clad material

Distribution:

W. Kitscha	MSED
G. Zakaib	MSED
E. Mistele	MSED
J. Russell (2)	MSED
A. Oslinger	MSED
G. Zakaib	MSED
B. Bowman	PID
G. Schneider	PID
C. Slongo	PID
J. Luxat	NOSS
J. Beaton	BNPD
R. Yu	DARL
G. Makdessi	PNGS
J. Baron/K. Mori	Technology & Research Department
R. Sauve	Kinectrics
A. Chan	Kinectrics

NOSS Records

List of Revisions

Rev. No.	Page No.	Description of Revisions	Computed By	Checked By	Date
0	All Pages	Original Issue.			

Table of Contents

Page

Executive Summary iii
List of Revisions v
Table of Contents vi
List of Appendices viii

1.0 INTRODUCTION 1

2.0 JET IMPACT TEST PROGRAM 2

2.1 Objectives of Jet Impact Test Program 2
2.2 Test Rig 2
2.3 Target Description 4
2.4 Preliminary Test Results – Calcium Silicate Pipe Insulation 4
2.5 Over-Clad Tests 8
2.6 Debris Generation 8
2.7 Uncertainty of Results 10

3.0 APPLICATION OF RESULTS 10

3.1 Scaling 10
3.2 Assumptions and Limitations: 12
3.2.1 Assumptions: 12
3.2.2 Limitations: 12
3.3 Application: 13
3.3.1 Small Break Jets 13
3.3.2 Large Breaks 15
3.3.3 Congested Area 17
3.3.4 Other Seam Orientations 18

4.0 CONCLUSIONS 18

5.0 RECOMMENDATIONS 19

6.0 REFERENCE AND DESIGN INPUTS 20

LIST OF TABLES AND FIGURES

Table 1 Summary of Test Conditions

Table 2 Actual Debris Generation Results for Tests Where Insulation was Liberated from Target

Table 3 Debris Generation Corrected Results For Tests with Longitudinal Seam at 45°

Figure 1 Schematic of Test Facility

Figure 2 Typical Pressure –Time History for Reservoir

Figure 3 Typical Debris Size Distribution

Figure 4 Results from H3DMAP Finite Element Analysis

Figure 5 Longitudinal Seam /Jet Orientation vs Distance for Damage

Figure 6 Pressure distribution Between Bands as given by Kastner [5]

List of Appendices

APPENDIX A JET IMPACT TEST PROCEDURE

APPENDIX B JET IMPACT TARGET CONFIGURATIONS

APPENDIX C IDEAL SCALING

APPENDIX D SELECTED PHOTOGRAPHIC RESULTS

1.0 INTRODUCTION

The Emergency Coolant Injection System (ECIS) is designed to provide cooling water inventory makeup to the Heat Transport System (HTS) to ensure adequate fuel cooling following a Loss of Coolant Accident (LOCA). When the ECIS water storage tank has been exhausted, the cooling water recovery mode of operation commences wherein coolant that escaped from the break is recovered and recirculated for cooling purposes. The flow path of the coolant from the break to the recovery sump includes a series of gratings and a strainer intended to filter out debris in order to protect the recovery pumps, heat exchangers, and fuel channels from blockage or damage.

Failure of HTS piping may generate a substantial amount of debris through impact of the resulting two-phase jet with various insulation components. The debris thus generated could interfere with normal operation of the recovery system if the volumes exceed the capacity of the existing gratings and or strainer and causes them to become blocked. It is therefore necessary to assess the amount of debris that could reasonably be expected to be generated and transported to the strainer and grating.

In order to obtain information on debris generation which can be utilized to reduce the Zone of Influence[1] (ZOI) in the current OPG methodology [1], a test program has been undertaken. The jet impact tests are required to simulate both small (feeder size) and large (PHT piping) sized postulated breaks. Due to economic considerations, the tests are performed with an approximately 3” diameter nozzle.

While the tests simulate feeder sized breaks and non-guillotine ruptures at approximate full scale, they represent a scale smaller than that of a large pipe guillotine break. Application of the results to small scale breaks is straight forward, but in order to determine the applicability of the tests to large guillotine breaks, the effects of scaling must be considered. These effects may not be straightforward because of the complexities presented due to post-yield deformation of metals, the possibility of brittle fracture of non-metallic materials, and the interaction of these different materials.

Further difficulties are encountered when zone of influence shapes are introduced to ease calculation of insulation inventory and to differentiate between jet expansion in congested and non-conjested volumes. In order to obtain data which may be useful for assessing the debris generation for specific conditions, a series of preliminary tests have been performed.

This first series of tests was performed on calcium silicate insulated piping. ECIS strainer head loss testing has demonstrated that calcium silicate is the dominant contributor to pressure drop across the debris bed. Therefore, the initial priority was placed on testing calcium silicate insulation as it was expected to yield the greatest reduction in pressure drop. The test results and their application are discussed below.

[1] The Zone of Influence is the volume of space within the jet path, where debris could possibly be generated from debris sources within that volume.

2.0 JET IMPACT TEST PROGRAM

2.1 Objectives of Jet Impact Test Program

The jet impact test program was designed with the following broad objectives in mind. As this report is aimed at conveying preliminary results in order that they may be utilized in a timely matter, not all objectives have been met at this time.

1. To obtain debris generation data (ZOI and Debris Size Distribution) for small scale (~3" diameter) jet impacts of various insulation materials found in the vicinity of the primary heat transport system piping in OPG's nuclear facilities.

2. To obtain debris generation data (ZOI and Debris Size Distribution) for small scale (~3" diameter) jet impacts on standard calcium silicate insulation with enhanced cladding or other design improvements.

3. To develop a rationale for applying these results for postulated larger scale (up to 21" inside diameter) breaks.

4. To document this information for application in reducing the current 10D (congested) ZOI described in the assessment methodology.[1]

5. To provide information helpful in assessing the impact of additional debris loading postulated, in the methodology, in Stage Two, i.e. such as and 20 to 30D ZOI for non-congested volumes.

2.2 Test Rig

The jet impact test rig specially built for OPG and located at Kinectrics, consists of a high temperature high pressure reservoir, a 3" schedule 160 nozzle, rupture disk triggering mechanism, associated piping, and various instrumentation with data acquisition. In addition, there is a robust sample holding frame, debris capture cage, and various safety barriers.

The tank, shown in Figure 1, has a capacity: of ~ 2.2 m^3, a heating capacity of ~ 200 KW and various fill and bleed lines. The debris catch cage is approximately 12' x 12' x 12' and is built with 1"square wire mesh. Wire cloth can be used to further reduce the screen size if required.

The test procedure is given in Appendix A.

With the 3" nozzle (ID 2.87") the duration of blow down is approximately 10 seconds for initial reservoir conditions of 10 MPa saturated water. Figure 2 shows a typical vessel pressure time history during a high temperature test. Note that the test starts at approximately 27 seconds and ends at approximately 37 seconds where single-phase steam is discharging.

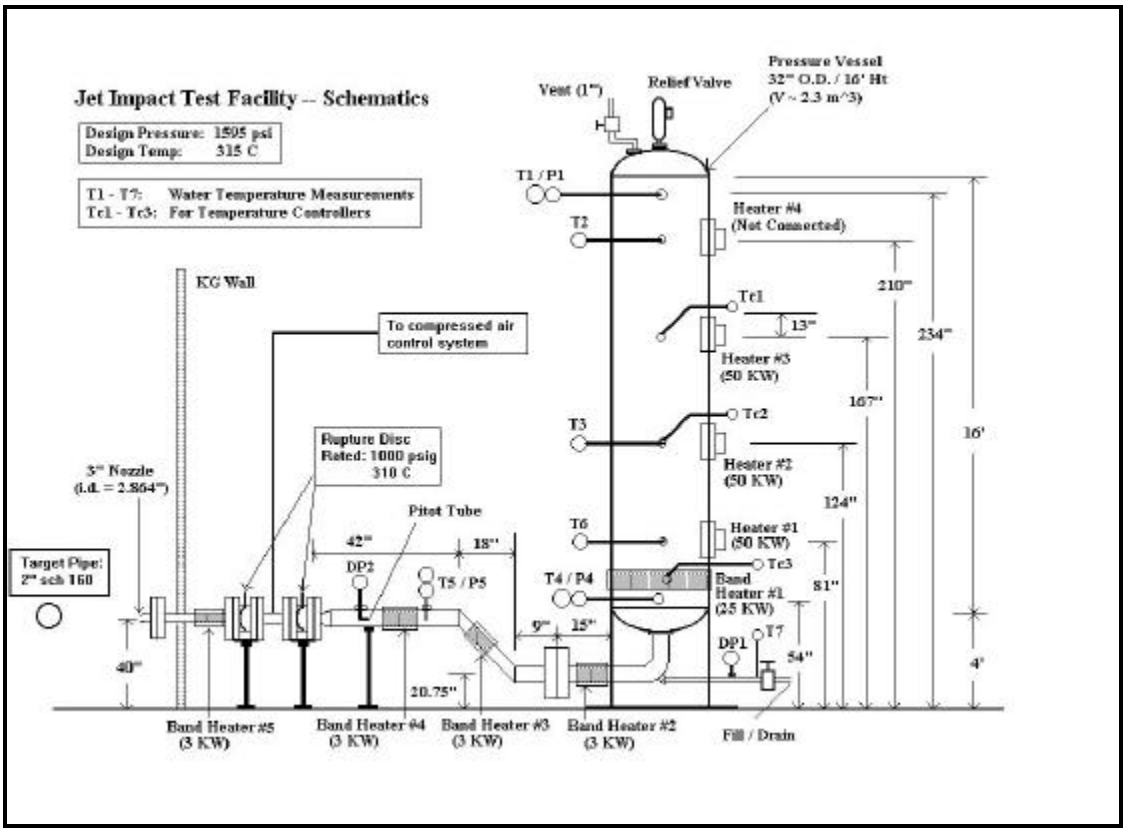

Figure 1 Schematic of Test Facility

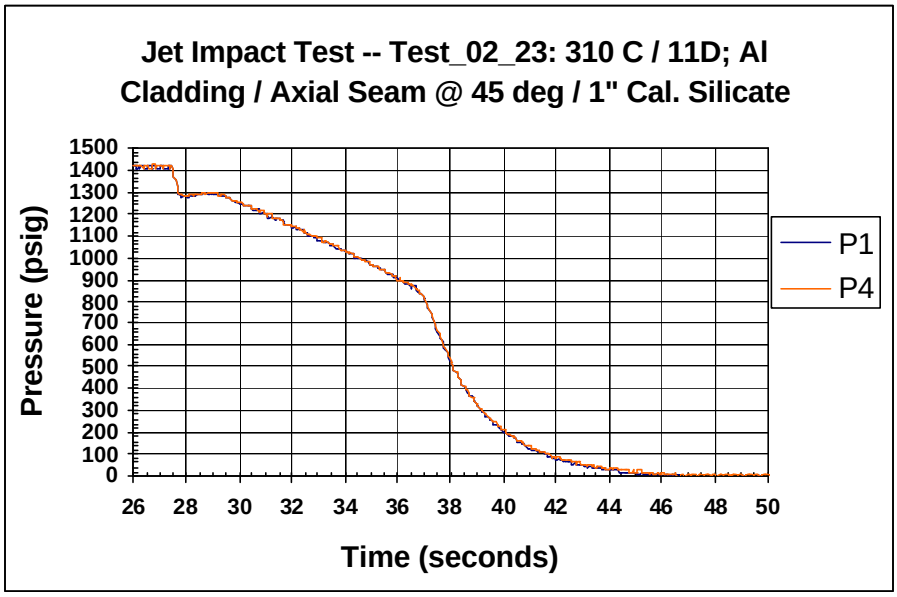

Figure 2 Typical Pressure –Time History for Reservoir

2.3 Target Description

The failure mode of Calcium Silicate piping insulation was determined through a series of jet impact tests. It was recognized that two important variables to be considered were the distance between the jet and the target and the angle of orientation between the jet and the longitudinal cladding seam. The targets were prepared using cladding and banding materials as per the specifications for large-scale piping used in OPG's nuclear plants [2]. Aluminum cladding with a thickness of 0.016" and stainless steel bands with a thickness of 0.020" and standard crimp connectors were used.

The targets were 48" long and consisted of a 2" schedule 160 pipe with 1" thick insulation, resulting in an outer diameter of 4.375". The nozzle inside diameter was 2.86". Standard cladding width is 24" which resulted in one or two circumferential seams depending on the test, and a longitudinal seam running the entire length.

The band spacing was based on the installation procedures for straight pipe [2]. The average spacing between bands was greater than ~6 ½ ". For those tests where the jet was centred between the bands (circumferential seam offset from jet centre), the space between the bands was 8". The maximum separation between bands per the installation specification is 8.25". Schematic drawings of the various target arrangements are provided in Appendix B.

Using a convention of 0° at the jet, 90° on the top of the target and 180° at the back of the target, tests were performed with the horizontal seam at 0°, 45°, and 180°. Various combinations of these angles and location of the circumferential seams were also tested.

2.4 Preliminary Test Results – Calcium Silicate Pipe Insulation

Test conditions and results are summarized in Table 1. Note that the distance given in the table is the minimum distance between the jet nozzle and the outer surface of the target. Damage is defined as a condition that will liberate insulation material from the protection of the cladding and potentially allow it to enter the water stream. Appendix D contains photographs of selected test targets.

It was found that the orientation between the seam and the jet is critical to the damage mechanism. With the seam at 0°, directly in line with the jet (Tests 1-5 Table 1), the threshold of damage was found to be located at a distance of between 5 and 7 jet diameters (5D - 7 D). When the seam was at 180° no damage was found at 3D (over-clad test). When the seam was at 45° damage occurred out to 20D, the furthest tested with the 2.86" nozzle

Table 1 Summary of Test Conditions

TEST	DISTANCE	OVER-CLADDING[2]	LONGITUDINAL SEAM	CIRCUMFERENTIAL SEAM	INSULATION LIBERATED
1[3]	7D	No	0°	Jet Centre	Yes (small amount)
2	7D	No	0°	Jet Centre	No
3	5D	No	0°	Jet Centre	Yes
4	7D	No	0°	Jet Centre	No
5	5D	No	0°	Jet Centre	Yes
6	5D	No	180°	Jet Centre	No
7	5D, offset 2D	No	0	Jet Centre	Yes
8	7D	No	45°	Offset[4]	Yes
9	4D	Yes	45°	Offset	No
10	3D	Yes	45°	Offset	No
11	4D	Yes	45°	Offset	No
12	9D	No	45°	Offset	Yes
13	11D	No	45°	Offset	Yes
14	13D	No	45°	Offset	Yes
15	20D	No	45°	Offset	Yes

[2] For tests with over-cladding the seam details given in this table are for the outer layer. See Section 2.4
[3] For this test, the band heater immediately upstream of the rupture discs malfunctioned and also there was no band directly over the circumferential seam contrary to the insulation specifications
[4] Circumferential seam located 9” from centre on one side and 12” on the other. Due to cladding overlap, seams are non-symmetric.

When failure occurred, the mode of failure was exclusively tearing of the cladding due to pressure acting on the edge thus exposing insulating material to the jet. From the figures included in Appendix D, it can be seen that the insulation liberated from the target pipe is almost exclusively from the far side from the nozzle. This is due to the cladding being “unwrapped” by the jet from the exposed edge to the back side. The insulation remaining on the near side of the target is protected from the jet by the remaining cladding. In all cases, the amount of insulation liberated was less than 50% of that on the target, and the size distribution consisted of a large proportion of large (over 1”) sized pieces; see Figure 3. This is significantly less severe than the 100% fines assumed in the current OPG debris generation methodology for both congested and uncongested spaces.

A non-linear (H3DMAP) finite element analysis was conducted which further confirmed the failure mode. A cylindrical section of cladding with two bands was modeled and a traveling pressure wave was applied to the edge. The resulting deformation and stresses were plotted for various time steps and it was concluded that the primary failure mode would be tearing of the cladding due to the high stresses induced along the band interface. Figure 4 shows one half of the model at the line of symmetry, and resulting effective stress at time equal to 4 ms. Note that the peak stress in the contour at 4 ms corresponds to the ultimate failure stress for the material modeled, i.e. σ_u = 13 ksi for Aluminum 1100.

Figure 3 Typical Debris Size Distribution

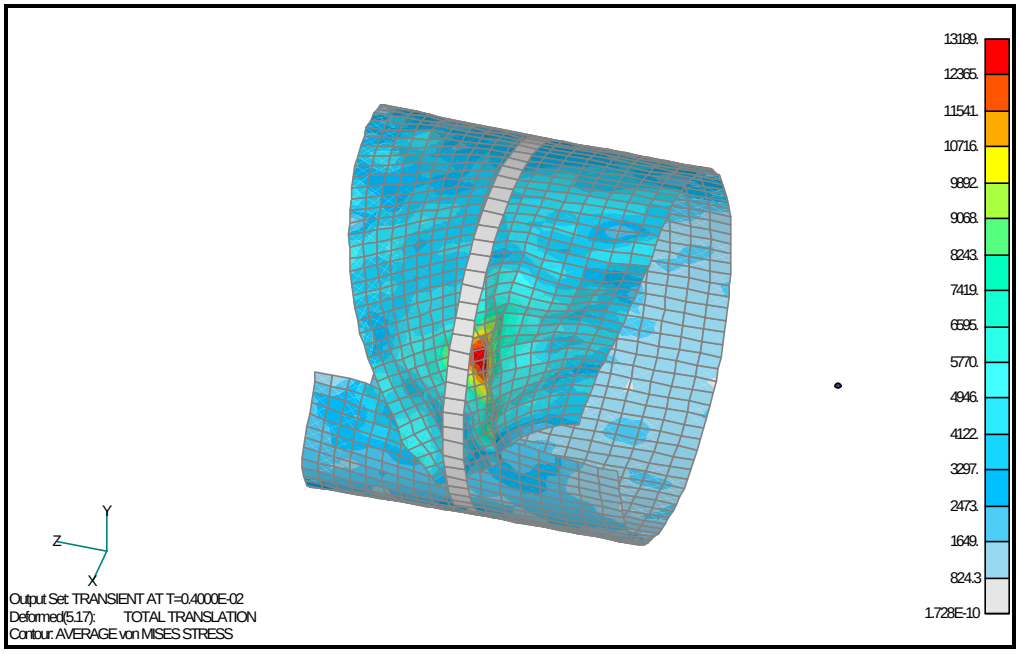

Figure 4 Results from H3DMAP Finite Element Analysis

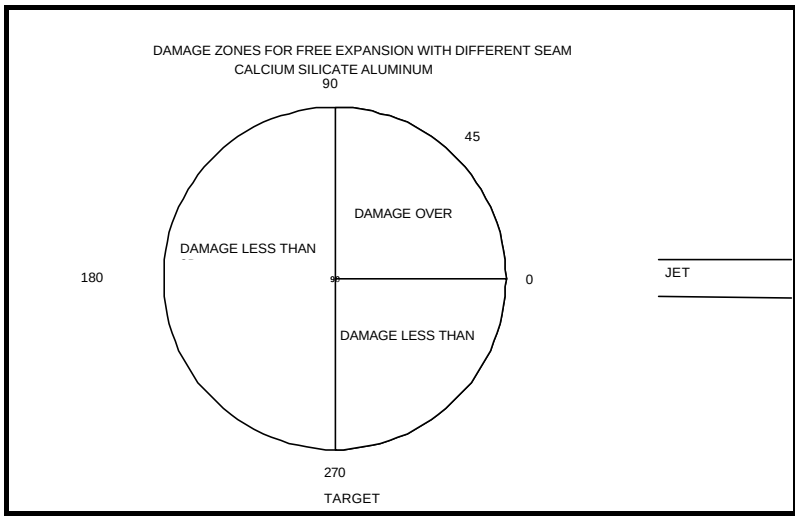

Figure 5 Longitudinal Seam /Jet Orientation vs Distance for Damage

2.5 Over-Clad Tests

Some tests were performed to gain early information on the benefits of reinforcing the existing insulation with a second layer of cladding. Stainless steel cladding with a thickness of 0.016" was installed over a "standard" test specimen. The over-clad longitudinal seam was placed at 45° to the jet, which was orientated 180° from the aluminium seam. The test was performed twice at 4D and once at 3D.

In all cases the aluminum and insulation remained intact and in one of the 4D tests the stainless steel over-clad remained intact. This represents over a six-fold improvement in performance from standard cladding alone. This result clearly confirms the significance of seam to jet orientation. With over-clad, only one seam is directly exposed to the jet, and the protection was found to be adequate to closer than 3 jet diameters, the minimum tested. With the longitudinal seam between 90° and 270° (tested only at 180°), the damage zone is less than 3D, Figure 5.

Note that although there was no insulation liberated for the 3-D test, the pipe was bent slightly and testing at closer than 3D was considered too hazardous with the current test set-up. The stainless steel over-cladding did not break into pieces but was removed by the jet as a complete piece. Consequently, it may represent a potential problem as a missile and cause secondary impact damage to adjacent equipment. If aluminum were found to be similarly effective, it would be the preferred over-clad material. Appendix D, contains a post-test photograph, (D15), of an over-clad target.

2.6 Debris Generation

The amounts of debris generated by the 45° tests are outlined in Table 2. Debris was collected by hand and sorted into the 3 size ranges - less than 1 inch, between 1 and 3 inches, and over 3 inches. When dried and weighed, the total insulation available was compared to the initial dry weight. The difference was counted as particulate too small to collect and was termed dust and hence would have to be assumed as easily transportable (either to the vacuum building or the ECI sump strainer). In reality, this amount includes any losses from larger pieces of insulation blown out of the test area and not collected and any losses caused by handling of the insulation during installation and removal from the pipe and during the drying process. Because the insulation material is quite brittle and tends to be somewhat chalky, this amount could be significant if even care is taken.

Tests at 5, 7, and 9-D showed damage extending beyond the edge of the test target and must be repeated with a smaller nozzle to ensure that the width of the damage zone is adequately captured. This may explain why the values of the dust collected do not change significantly for the tests between 5 and 11D.

Table 2
Actual Debris Generation Results For Tests Where Insulation was Liberated from Target

Test Number[5]	Target Distance	Initial Weight gm	Remaining on Target gm	Debris Classification			
				Over 3” gm	1” – 3” gm	Under 1” gm	Dust gm
5	5D	2109	1112	238	247	31	481
7	5D, offset 2D	2074	1325	75	160	49	465
8	7D	2116	1578	52	118	34	334
12	9D	2089	1263	48	136	55	587
13	11D	2090	1252	114	120	37	567
14	13D	2143	1700	53	61	23	306
15	20D	2130	1654	98	60	17	301

[5] Debris was liberated for tests #1,3, however size data is not available

2.7 Uncertainty of Results

The data presented in Table 2 are the results of single experimental measurements for each particular configuration. Although repeat tests have not yet been performed, the debris amount and size data for tests at different distances, for similar cladding seam orientations, is quite similar. Therefore given that there is conservatism in the method of accounting for fine particulates (i.e. all missing material is counted as fines) it is expected that further tests will not result in amounts of small debris significantly higher than indicated by Table 2.

For tests with target distances from 7 to 13 D, presented in Table 2, it was found that the zone of damage extended to one or both ends of the target. To account for this, it was assumed that the zone of damage would extend to the next natural discontinuity of the cladding, i.e. full sheets of cladding would be removed. The scale-up ratio obtained by “extending” the length of damage was applied to the debris mass for each classification and these corrected results are contained in Table 3. It is the Table 3 data that should be used for applications discussed in section 3.

There is some question as to the effect of having an empty pipe in front of the rupture disc section. It is postulated that this may cause a focusing of any pressure waves and increase the damaging forces thus producing a more severe jet impact than would be observed for the bounding case, i.e. instantaneous guillotine pipe rupture.

There is no measurable variability in the opening time of the rupture discs. All the results for the opening times indicate that the opening is virtually instantaneous and certainly much faster than would be realistically expected with a finite crack growth rate.

3.0 APPLICATION OF RESULTS

Application of the results requires using the values given in Table 3 to calculate the expected volume and debris size distribution for various postulated breaks. The range of possible breaks spans from small holes in small pipes (feeders) to postulated guillotine breaks of large PHT piping. The relative probability of the various break scenarios has not been taken into consideration in the methodology.

3.1 Scaling

Test scaling is a combination of two ratios, one based on the jet diameter and the other based on target size. On the one hand, the jet scale is the ratio of the inside diameter of the test nozzle to the effective diameter of the postulated break. For a feeder guillotine break this is approximately 1 while for a fish-mouth crack, this may be less than or greater than 1. For the bounding case of a guillotine break of the primary heat transport pump suction line, this is approximately 1:7 for the initial nozzle diameter used in the test program.

On the other hand there is the target scaling. The ratio of the target insulation diameter and thickness to that of the postulated target is termed the target scale. Therefore it can be seen that there are a number of combinations possible ranging from a large break on a small target to the more likely case of a small break on a large target. Successful applicability of the tests will rely upon consideration of both the jet scale and the target scale.

Table 3
Debris Generation Corrected Results For Tests with Longitudinal Seam At 45°

Test Number	Target Distance	Extent of Damage		Initial Weight	Remaining on Target	Debris Classification				Total Debris as a % of OPG Prediction
		Predicted (OPG Methodology[6])	Measured[7]	gm	gm	Over 3" gm	1" – 3" gm	Under 1" gm	Dust gm	
8	7-D	14-D	~16-D (2)	2418	1803	59	135	39	382	35
12	9-D	18-D	~22-D (5)	2703	1634	62	176	71	760	48
13	11-D	20.4-D	~12-D (3)	2787	1669	152	160	49	756	44
14	13-D	21-D	~10-D (3)	3061	2429	76	87	33	437	24
15	20-D	23.5-D	4D (0)	2130	1654	98	60	17	301	16

[6] Based on Uncongested ZOI [1]
[7] When calcium silicate damage extended past the end of the target, it was assumed that the damage zone would continue until the next sheet of cladding formed the top layer. Numbers in () indicate number of diameters damage was assumed to be added past the end of the target.

3.2 Assumptions and Limitations:

In order to apply these results to the debris assessment at the stations, some assumptions must be made. These are discussed below. Limitations in the range of application are also noted.

3.2.1 Assumptions:

- Dimensional similarity holds for the pressure field. i.e. the pressure profile with length measured in pipe-inside-diameters is the same at any scale. This is the basis of many papers on the subject found in the literature. [3,4,5,6] Hence models in the literature expressing pressure field as a function of distance from the jet nozzle can be used to predict the pressure on the target at different distances. This assumption is important for application of test results to large pipe breaks.

- Incipient cladding damage is proportional to the applied force (pressure). From strength of materials theory, this is true for both tensile/compressive and shear stresses so long as strain-rate sensitivity is not important. Since we are concerned with incipient damage, this is expected to be valid. It follows from this that if no damage is produced on the small scale, then no damage will be caused to the larger scale. However, to test this assumption, tests will be performed at an additional smaller scale. If there is a significant deviation from the linear assumption, it will become evident from these tests. This too is a scaling issue required only for application to large pipe breaks.

- Relative damage done to a smaller target bounds that on a larger target for the same jet diameter. The amount of damage on a smaller pipe can be used directly to conservatively deduce the volume of damage on a larger target for the same jet conditions. (i.e. if the length of damaged pipe insulation were found to be 5 nozzle diameters in a scale test, then initial assumption would be that 5 nozzle diameters of damage would occur on a larger diameter target representing a larger volume of material). This assumption allows us to conservatively account for larger targets where the relative amount of damage may be less because more of the material of a larger diameter target would be further from the jet.

- The size distribution of debris measured for the small target of a test is the same for larger breaks. This assumption is conservative because the maximum size debris is necessarily smaller for the test than for an actual large pipe failure because of the greater thickness of the material in the full-scale case. The test target insulation thickness is 1” while a large PHT pipe insulation thickness is 4”. It is not likely that the thicker material will break down into debris pieces smaller than the thinner material.

3.2.2 Limitations:

- The jet impact tests performed to date are specifically for freely expanding jets impacting on aluminum clad, stainless steel banded calcium silicate insulation located on a separate pipe. The exclusive mode of failure found for this material is shearing of the cladding at the bands. Because the bands are made of a thicker and higher strength material than the cladding, this must be the lowest strength failure mode for this configuration hence the test results are applicable only to materials with similar failure modes under similar loading conditions. A very limited non-linear simulation was performed by applying a traveling wave onto a

cylindrical section of cladding complete with bands. The calculated deformation and mode of failure were similar to those observed during the tests. Figure 5 depicts a time step from the anaylsis.

- These tests are also done without congestion in the area, i.e. for freely expanding jets. The affects of congestion will attenuate the effects of the jet and must be determined separately.

3.3 Application:

It is recommended that the results obtained for Calcium Silicate pipe insulation may be applied as follows.

3.3.1 Small Break Jets

For small jets impacting on small diameter pipe targets, the results are directly usable except that a correction for insulation thickness may be required. If the subject target has an insulation thickness different from the test target, an adjustment could be made based on the volume of insulation material in the zone of influence, which could potentially be damaged. For small pipe breaks on large diameter targets, a similar correction is required, also based on volume of material in the measured zone of influence. The corrections would be made by multiplying the measured volumes of liberated calcium silicate, for the various size ranges, by the target scaling factor.

The target scaling factor is defined as:

$$SF_T = \frac{V_T}{V_F} = \frac{p/4\left(D_T^2 - d_T^2\right)L}{p/4\left(D_F^2 - d_F^2\right)L} \quad \text{.....1.}$$

Where V = Volume of insulation
D = outer diameter of insulation
d = inner diameter of insulation
L = length of pipe where damage occurs
Subscripts: T refers to test F refers to full scale

The amount of calcium silicate liberated in each size range will thus be scaled by the volume ratio between full-scale target and test scale target.

For example:

Using the data from test 12, Table 3:

- 4” aluminum clad calcium silicate insulated 48” (17D) target with 1” thick insulation,
- seam at 45°
- target at 9D

The following distribution of liberated material, over a damage length of 22D, (2.703 kg) was determined:

Over 3”	0.062 kg
1-3 “	0.176 kg
Under 1”	0.071 kg
Dust (not collected)	0.760 kg

These results would be applied to a small break impinging on a large (24”) target located 9 jet diameters away (26”) as follows:

For test scale
Insulation thickness = 1”
Insulation ID = 2.375”
Insulation OD = 4.375”
Length of damage = 2.86*22 = 62.9”
V_T = 663 in^3

For full scale
Insulation thickness = 4”
Insulation ID = 24”
Insulation OD = 32”
Length of damage = 2.86*22 = 62.9”
V_F = 21984 in^3

Target scaling factor = VT / VF = 1/33

The calculated debris is thus

Over 3”	0.062 kg *33 = 2.05 kg
1-3 “	0.176 kg *33 = 5.81 kg
Under 1”	0.071 kg *33 = 2.35 kg
Dust	0.760 kg *33 = 25.07 kg
Total	1.069 kg *33 = **35.28 kg**

Similar tests done at different distances will give different results. The results presented in Table 3 are applicable to the first pipe intercepted by a jet when the seam is at 45 to the jet. If further targets are intercepted, the jet strength and hence the damage will be much reduced. If the seam is in a less vulnerable position i.e. 0 to -90 or 90 to 270, it is expected that the damage will be much reduced. In the experimental results the jet was centred on the targets. This is

expected to have a maximum damaging affect on the target because the pressure is highest in the centre. However it is statistically more likely that a portion of the jet offset from the core would impact a pipe. Consequently, a generalized application of the above method for utilizing the test results is expected to be conservative.

3.3.2 Large Breaks

A further complication arises when the results are to be applied to a postulated large guillotine pipe break. The most straightforward approach to handling jet scaling requires that all dimensions be scaled by the same factor. (See Appendix C) With this approach, the zone of influence for the full scale would readily be determined from the experimental results by correcting by the target scale as above.

However the required cladding and banding materials are not available in dimensions that would make this generalized approach to scaling practicable, hence a more restrictive application of the results is necessary. Before any attempt is made at correcting for scaling, it is necessary to determine or make some assumptions about the mode of failure. Different failure mechanisms may require different corrections.

For large pipe breaks, the jet scale is the ratio of the test jet diameter to the diameter of the break under consideration. For a cladding tensile stress failure, it would be necessary to scale the cladding thickness by this jet scale. For example if the jet test results were to be applied to an 8” break, the jet scale would be approximately 2.86/ 7.625 ≈ 3/8. Scaling to this size is not possible due to limitations on the availability of materials of suitable size and material properties, hence full scale material must be used. In addition, for ideal scaling the banding spacing and the banding size would also have to be reduced by a factor of 3/8.

However, test results have shown that the predominant mode of failure was shearing of the cladding between the bands, for all tests where failure has been observed. Since the ratio of banding to cladding strength should be constant at any scale, it follows that the bands need not be scaled, as they will not fail under these loading conditions.

To account for the cladding being too thick for the scale, it is necessary to adjust the target to obtain a representative damage force. Because the mode of failure is cladding shearing between bands when the pressure acts on the seam, the force can be seen to be the product of the pressure and the exposed area. Therefore the shearing force can be increased by increasing the spacing of the banding thereby exposing a larger area to the jet pressure.

If the cladding is 8/3 times too strong, the force can be increased by 8/3 times by not scaling the banding spacing, but leaving it at full scale spacing (8/3 x 3/8 = 1). This of course assumes that the pressure is constant across the band span. Using the correlation for pressure distribution from reference 5, it can be seen that the pressure profile on a target becomes very flat when the distance from the nozzle exceeds 2 jet diameters (Figure 6). Assuming the jet is centred between two bands (spacing 8.25”), the maximum pressure between the bands at 3 D from the nozzle is 0.65 MPa and the average is .60 MPa. At 5 D the pressures are 0.28 and 0.27 respectively and at 10 D there is negligible difference between the maximum and average. These differences are much less than the scatter in the data found in the literature and hence the pressure can be taken as uniform between bands for this nozzle size for distances = 3D.

Consequently, the cladding scaling problem introduced by not having thinner material is addressed by not putting the bands closer together.

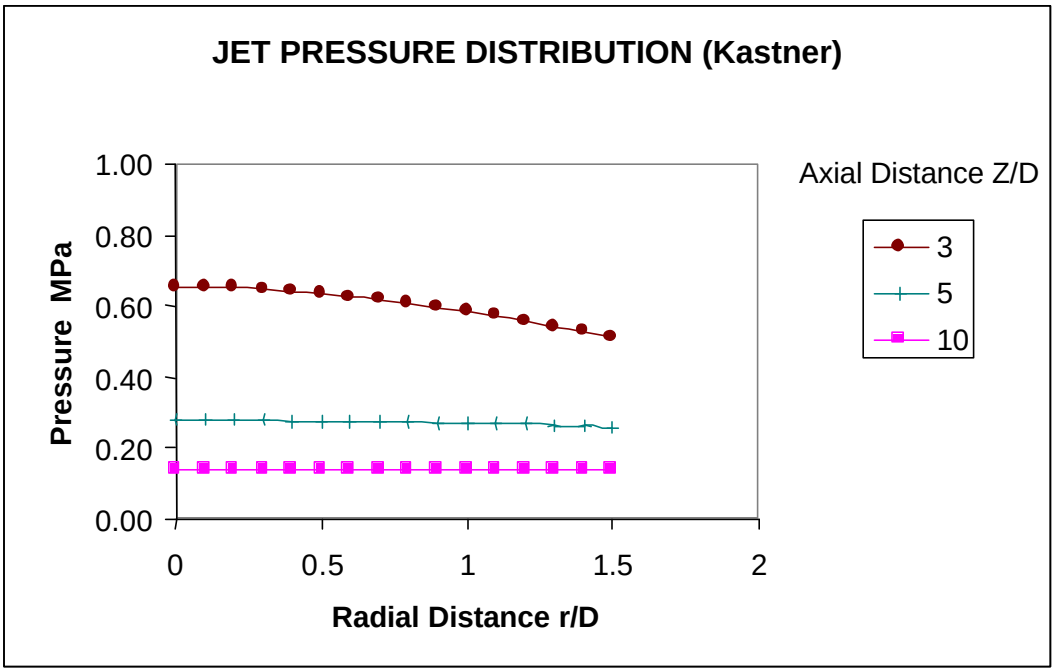

Figure 6
Pressure Distribution Between Bands as given by Kastner [5]

Therefore, the same scaling rational as used for small breaks can be used except that the lengths L must be scaled. The appropriate scaling is the jet-scaling factor. Applying this to the above example:

$$SF_T = \frac{V_T}{V_F} = \frac{p/4\left(D_T^2 - d_T^2\right)L_T}{p/4\left(D_F^2 - d_F^2\right)L_F} \quad \text{.....2}$$

$$L_F = L_T / SF_J \quad \text{.....3}$$

$$SF_J = \frac{d_{testjet}}{d_{break}} \quad \text{.....4}$$

General Scaling Factor for all tests:

$$SF = \frac{\left(D_T^2 - d_T^2\right)SF_J}{\left(D_F^2 - d_F^2\right)} \quad \ldots\ldots\ldots\ldots\ldots\ldots\ldots\ldots\ldots\ldots\ldots\ldots\ldots\ldots 5$$

Where D = outer diameter of insulation
d = inner diameter of insulation

Subscripts: T refers to test
F refers to full scale

Building on the previous example, the debris generated by a freely expanding jet from a guillotine break of a 21” ID pipe on a 24” pipe target at 9D (189”), jet to seam angle of 45° is calculated as follows:

Jet scaling factor = 2.864/21 = .1364

The calculated debris is thus:

Over 3”	0.062 kg * 33 = 2.05 kg/.1364 = 15.03 kg
1-3 “	0.176 kg * 33 = 5.81 kg/.1364 = 42.58 kg
Under 1”	0.071 kg * 33 = 2.35 kg/.1364 = 17.22 kg
Dust	0.760 kg * 33 = 25.07 kg/.1364 = 183.79 kg
Total	1.069 kg * 33 = 35.28 kg/.1364 = **258.61 kg**

In the above discussion no credit is taken for the case of a small break impinging on a large target where the jet influence will be less severe on the outer edges of the target diameter. These worst case results are for the case of a freely expanding jet impinging directly at a 45° angle under a longitudinal seam. In tests where the seam was at a more favourable angle, or not directly exposed to the jet, markedly less damage would be expected. In the experimental results the jet was centred on the targets. This is expected to have a maximum damaging affect on the target because the pressure is highest in the centre. However it is statistically more likely that a portion of the jet offset from the core would impact a pipe. Consequently, a generalized application of the above method for utilizing the test results is expected to be conservative.

3.3.3 Congested Area

The experimental program has been limited to measuring damage for a freely expanding jet (non-congested area). Application of the jet impact test results to a congested area requires consideration, if over conservatism is to be reduced, as this is the most prevalent situation in the feeder cabinet area where a break is most likely to occur. The exact effect of blocking or partially blocking a jet at various distances is untested, but it can reasonably be assumed that some of the energy will be dissipated and any targets further out will be damaged less than if the blockage were not to occur.

On one hand it could be assumed that all energy is dissipated by the first impact and therefore it is necessary only to determine where the closest pipe to the break is. On the other hand it could be assumed that no energy is dissipated by a previous impact and therefore the zone of influence extends out past 20D. In reality, the true phenomena lies somewhere between with a most likely non-linear relationship between loss of energy and number of previous impacts and distances between targets.

It could therefore reasonably be assumed that, for a congested area, the damage would be as per these measurements out to the first impact and would fall to some fraction, say ½, for the second impact and to zero thereafter. Testing under congested conditions similar to those found in the area of concern in the stations should be done to remove some of this uncertainty.

3.3.4 Other Seam Orientations

As discussed previously, the volume of calcium silicate debris generated is significantly reduced if seam orientation is not at the worst condition (i.e. not at 45°). While a 45° is the bounding case, it is not realistic to apply it to all pipes that may be impacted by the jet. Longitudinal seams on horizontal pipes are located only at nominally 0° and 180°. This is in order to prevent dripping liquid from entering the insulation. If a random distribution of orientations and breaks is assumed, the probability of a pipe break-to-seam orientations are as follows:

- 0° to 90° Probability =.25 Corresponding ZOI: >20 D
- 90° to 180° Probability =.50 Corresponding ZOI: 3 D
- 0° to -90° Probability =.25. Corresponding ZOI: 7 D

Since this represents a significant potential reduction in the amount of debris generated, it is recommended that the debris generation methodology be revised to allow a generalized credit for seam orientation in the site assessment.

4.0 CONCLUSIONS

The jet impact tests performed in support of the strainer plugging issue have significantly increased the knowledge base with respect to damage wrought on calcium silicate insulated pipes by a two-phase jet.

- The failure mode has been shown to be shearing of the cladding due to pressure acting on the exposed edge.
- The angle of the longitudinal seam with respect to the jet has a very significant effect on the ZOI.
- The failure mode is such that a large fraction (>50%) of the calcium silicate remains on the piping protected from the jet by the cladding on the front of the pipe.
- Of the debris liberated from the pipe, the test results conservatively indicate that a large fraction of the debris is dust.
- The failure mode has pointed to the damage mitigating solution of over-cladding. Based on limited testing, a reduction of the damage zone, for freely expanding jets, from over 20D to less than 3D has been demonstrated with over-cladding.

The scaling rational is valid for shearing of the cladding where the bands do not break. Further tests, with a smaller nozzle, are required to quantify the extent of damage for freely expanding

jets for target distance under 11D. Application of these results to all pipes within a spherical ZOI without modifications to account for a congested area would be overly conservative. However qualification and reduction of the conservatism may require further testing.

5.0 RECOMMENDATIONS

- It is recommended that for calcium silicate insulated pipes in the configurations addressed by this study, the debris generation assessment methodology be revised to take advantage of the reduction in the conservatism identified in this report. Specifically within a ZOI the fraction of particulate and debris was found to be significantly less than 100%.

- The methodology presented in this report for applying the test results to uncongested areas should be refined to account for a congested ZOI.

- The potential over-conservatism due to focussing of pressure waves in the empty piping downstream of the rupture discs should be further investigated either by analysis or testing.

- The test program for calcium silicate should be continued to assess/confirm the following:
  - effects of congestion,
  - the lateral extent of the zone of influence for tests under 11D,
  - the scaling effect for a smaller nozzle
  - the applicability of the correlations
  - the mode of failure, ZOI, and debris size distribution for jet impact on broken pipe (axial impact).
  - the effectiveness of standard aluminium cladding as an over-clad material

- The test program should be continued to assess the performance of other materials used near the feeder cabinets in OPG's nuclear facilities.

6.0 REFERENCE AND DESIGN INPUTS

References:

1. Slongo, C.R., Dinadis, N., Dean,B., Assessment Methodology of LOCA-Generated Debris Impact on ECIS Recovery Operation, OPGN Report #985099 (Rev1), File N-REP-34320-985099P, June, 1999, pp 6.

2. Leca, C.T., Wolfden, W, Laur, B., OHN Insulation Standards Field Handbook, April 28, 1998

3. Luxat, J.C., Modelling the Characteristics of Liquid and Vapour Jets,

4. Yano, T. et al, An Experimental Study of Blowdown Thrust and Jet Forces for a Pipe Under Boiling Water reactor Loss-of-Colland Accident Conditions, Nuclear Science and Engineering, 88, pp386-395 (1984)

5. Kastner, W. and Rippel, R., Jet Impingement Forces on Structures- Experiments and Empirical Calculation Methods, Nuclear Science and Engineering, 105, pp269-284 (1988)

6. Wenzel, H.H. et al, Blow-down Investigations on the Performance of Insulating Systems, Final Report for KAEFER Isoliertechnik GmbH & Co. KG August 1995 B.I.G. V-32.608

7. Zigler, G. et al, Parametric Study of the Potential of BER ECCS Strainer Blockage Due to LOCA Generated Debris, NUREG/CR- 6224, SEA No. 93-554-06-A:1, Oct. 1995. Appendix B, pp B-8- B-14.

APPENDIX A

Jet Impact Test Procedure

Target Preparation

1. Weigh and record the weight of the target insulation material used.
2. Put the insulation material into an oven and bake at 100° C for 24 hours.
3. Take the insulation material out of the oven, weigh and record its "dry" weight.
4. Strap the insulation onto the target pipe using ½" s.s. bands as specified.
5. Make digital photographs of the insulation on the target pipe.
6. Cover the target with the specified cladding and strap the cladding with ½" s.s. bands using the appropriate tools. Banding to be spaced 8-1/4" apart and covers each seam. All banding to fit snug and straight.
7. Make digital photographs of the target.
8. Mount the target onto the target support structure in the test area.
9. Adjust the distance between the target and the nozzle to specified distance.
10. Use two turnbuckles to secure the target support structure to the main support frame.
11. Tighten the stud bolts to secure the support structure to the guide rails to prevent lifting.
12. Close and lock the debris catch-cage.
13. Close and lock the fence.

Pressure Vessel and Test Preparation

1. Open the vent valve on top of the pressure vessel.
2. Fill the pressure vessel with service water.
3. Bleed all instrumentation lines.
4. Drain water level down to specified level.
5. Turn heaters on[1].
6. Monitor the vessel temperature and pressure continuously.
7. Let the pressure vessel boil at 100° C for 5 minutes to remove air from the vessel.
8. Close the vent valve on top of the pressure vessel to begin pressurization of the vessel.
9. Rope off and block the walkway to the KG south entrance when the pressure vessel achieves 200 psig.
10. Notify people working in BTF and KG (they will be informed before hand re the test schedule). Evacuate the room in BTF with window facing the test area.
11. Notify Kipling security and ask for support in stopping traffic south of KG.
12. Turn all heaters off when the T1 achieves 305° C.
13. Drain the cold water from the bottom of pressure vessel until temperature T5 reaches ~ 280° C.
14. Close the drain valve and turned the lower immersion heaters back on.
15. Turn all heaters off when T1 achieves 310 or P1 achieves 1436 psig.

Note: *1. The test facility will not be left unattended with the heaters on. The operator will monitor the pressure vessel temperature and pressure continuously. The operator will turn the heaters off immediately by pushing an emergency button if anything unusual or un-anticipated happens.*

Testing

1. Check hydraulic jacks for proper pressure.
2. Secure perimeter around test area south of KG.
3. When all is clear, a go ahead to initiate the test will be given to the test operator inside KG via radio.
4. Sound a warning signal.
5. The operator initiates the test by depressurizing the spool piece between the two rupture discs.
6. Inspect the road conditions around test area for slipping hazard in wintertime. Spread salt and/or sand in the affected area if needed.
7. Monitor test area for unusual dust formation.
8. Inspect the damage to the target and make digital photographs using a digital camera.
9. Collect all insulation material (including debris if the target was damaged).
11. Put all the insulation material into an oven and bake at 100° C for 24 hours.
12. Sort the debris into size ranges of under 1”, between 1 and 3” and over 3”/
11. Weigh the “baked” insulation materials in each size range and the remaining insulation and record.

APPENDIX B

Jet Impact Target Configurations

Figure B1 Band Configuration for Seam at Jet Centre Tests

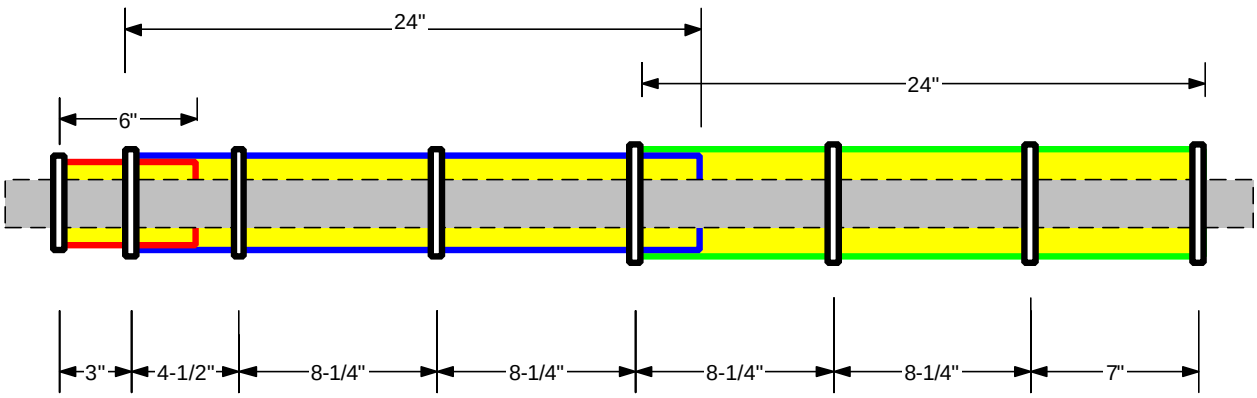

Figure B2 Band Configuration for Seam Offset Tests

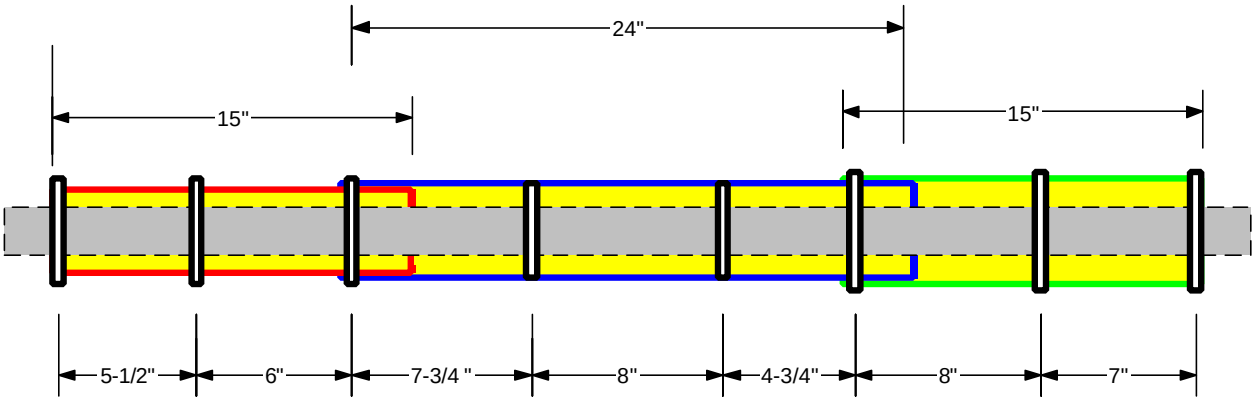

APPENDIX C

Ideal Scaling

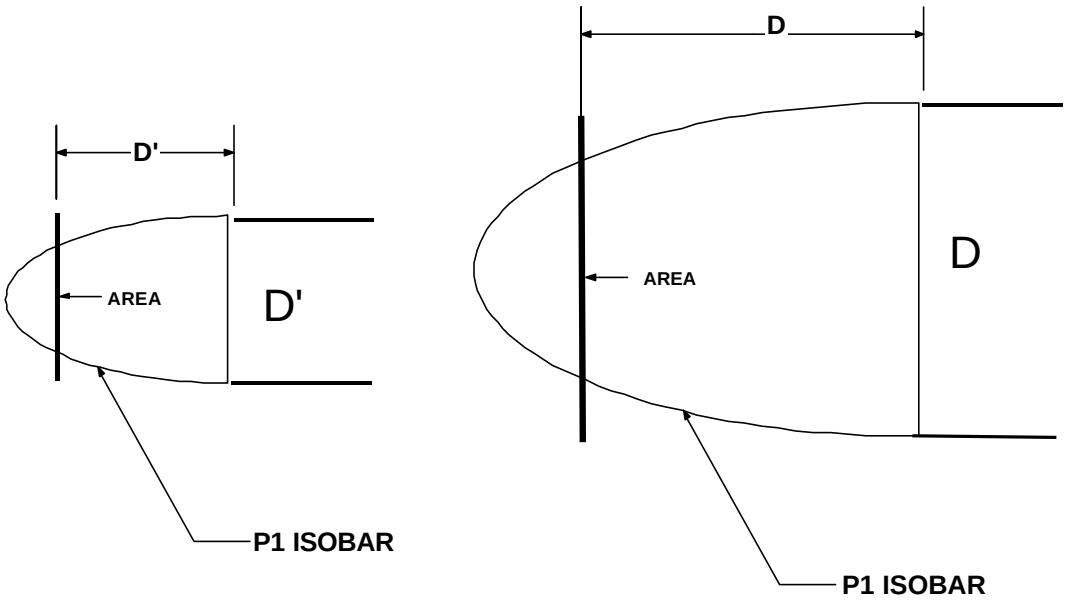

Given two jets from nozzle diameters D and D', with identical upstream temperature and pressure, the iso-bars on a target located at a distance of 1 jet diameter, 1D, will have identical values. Therefore the average pressure acting on identically scaled areas of the targets will be identical. The following can then be stated:

Pressure profile scales with length
Scaling factor $\lambda = D'/D$
D = full size jet diameter
D′ = test nozzle jet diameter
For $\lambda = 1/2$; $D'=D/2$; $A'=A/4$; $V'=V/8$
Where A = area
V = volume

Force scales with area

$F = P_{avg} \times A$ $F' = P_{avg} \times A' = F/4$

Where F = force
P = pressure

Tensile/Compressive Stress s, scale directly

$s = F/A$ $\qquad$ $s' = F'/A' = (F/4)/(A/4) = F/A = s$

Deformation scales with diameter
$DL = FL/AE$ $\qquad$ $DL' = F'L'/A'E = (F/4xL/2)/(A/4xE) = DL/2$

where E = modulus of elasticity

Shear Stress t scales directly

$\tau = F/\pi D\mathbf{t}$ $\qquad$ $\tau' = F'/\pi D'\mathbf{t}' = (F/4)/(\pi(D/2)(\mathbf{t}/2)) = \tau$

where **t** = thickness

Therefore for statics, all dimensions should be scaled

Dynamics…
$m = \rho X V$ $\qquad$ $m' = \rho X V' = m/8$

Where m = mass
From $F = ma$ $\qquad$ $a = F/m$ $\qquad$ $a' = F'/m' = (F/4)/(m/8) = 2a$

Where a = acceleration
Velocity $\propto$ at
Where t = time
Therefore to obtain correct velocity, time must be scaled.

Conclusion: all dimensions and time should be scaled.

Scaling of Particle Size Distribution

For damage by jet erosion, all material is dust, and no scaling is required
If larger pieces are produced, we cannot expect that smaller sized debris would be produced from a larger (thicker) target but we cannot adequately show how to scale-up the sizes without extensive testing. Therefore we should accept measured particle size distribution as correct. This is conservative.

APPENDIX D

Selected Photographic Results

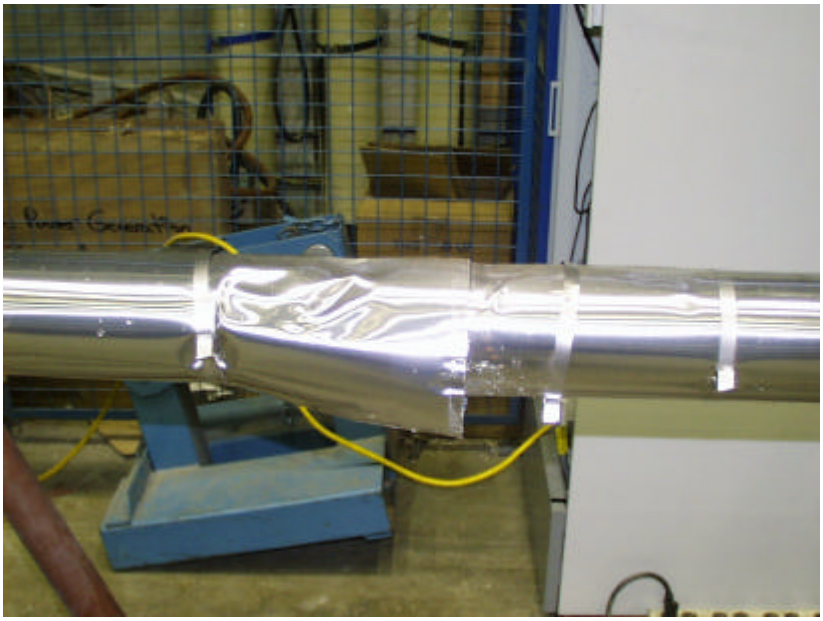

Figure D1 5-D seam at 180°

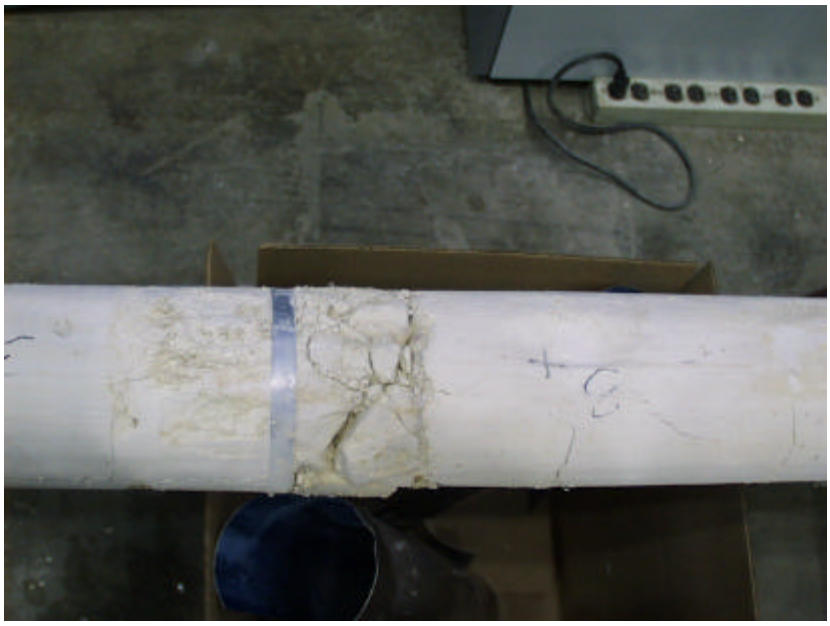

Figure D2 5-D seam at 180° Cladding removed

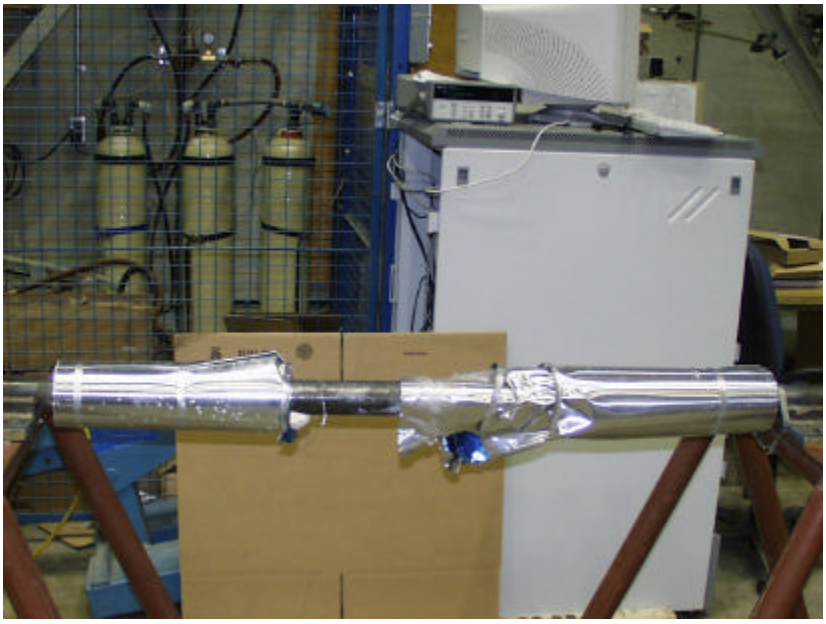

Figure D3 5-D seam at 0°

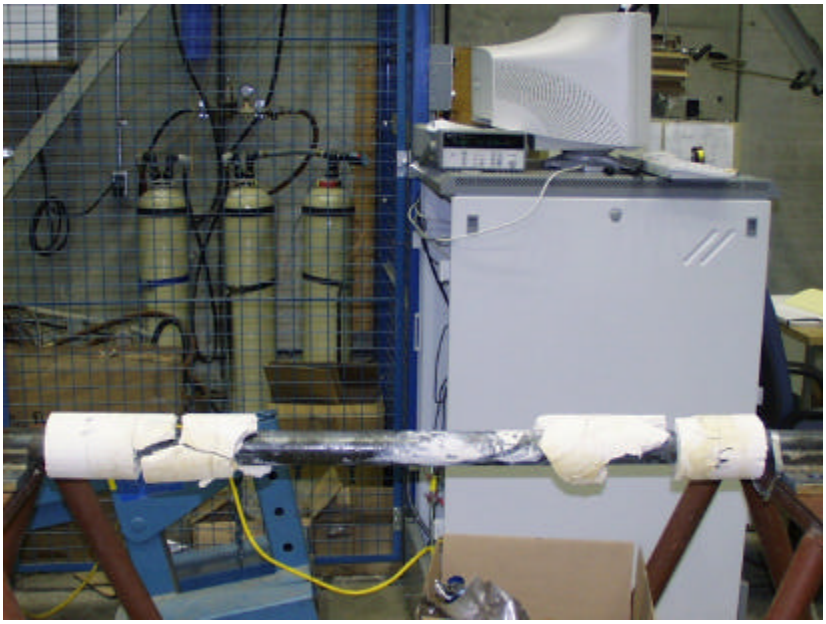

Figure D4 5-D seam at 0° Cladding Removed

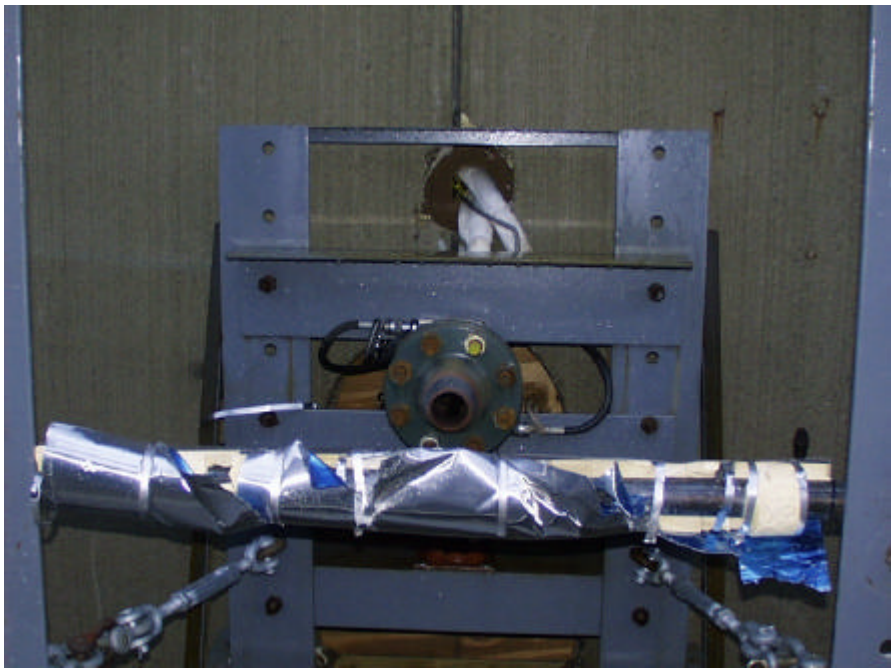

Figure D5 7-D seam at 45°

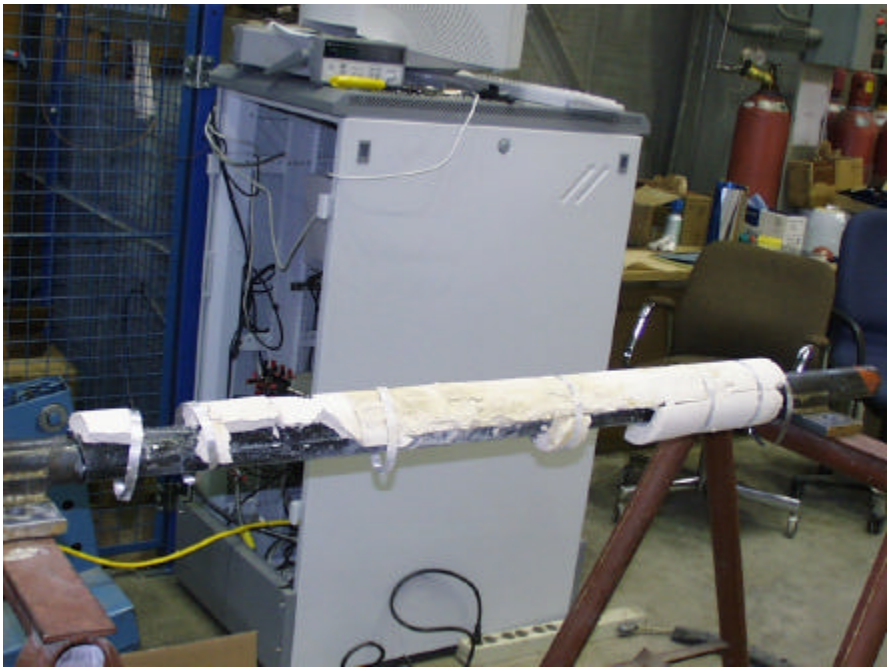

Figure D6 7-D seam at 45° Cladding Removed

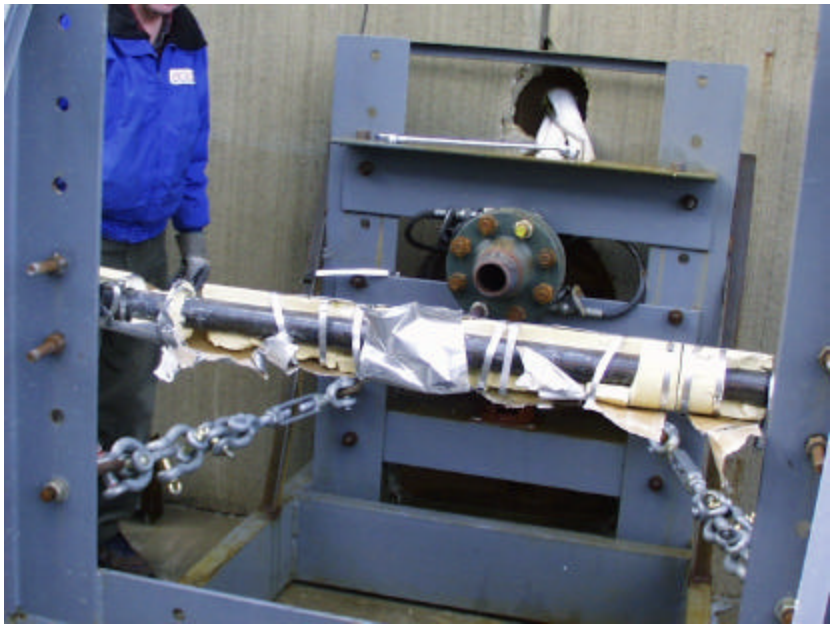

Figure D7 9-D seam at 45° Back View

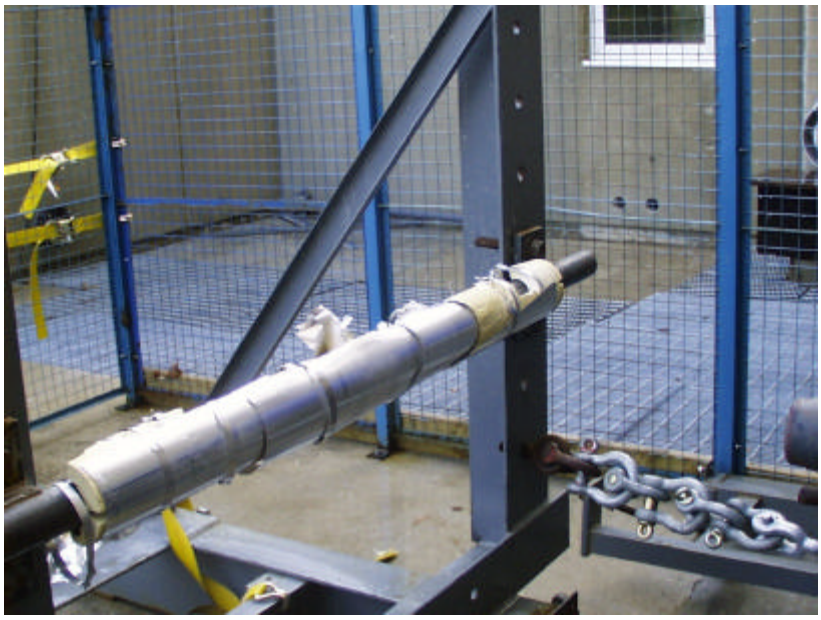

Figure D8 9-D seam at 45° Front View

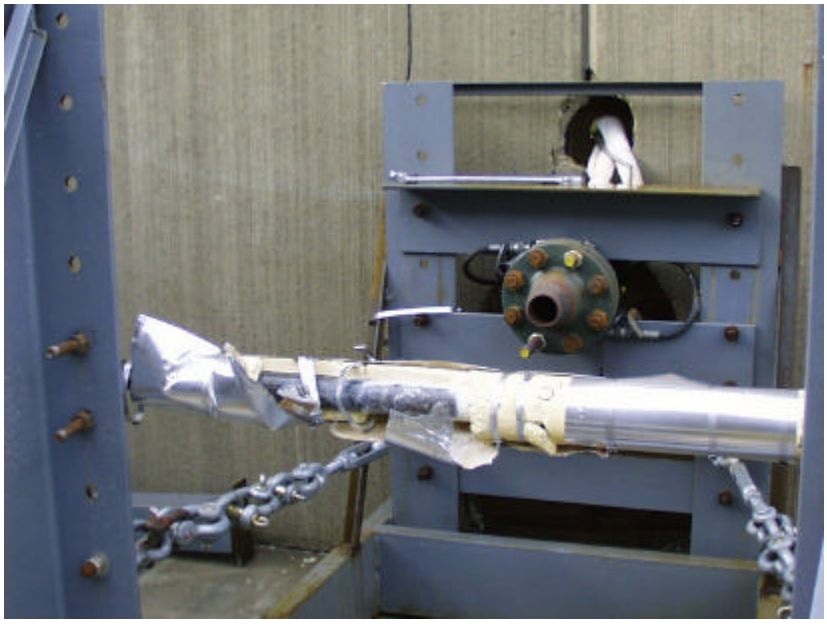

Figure D9 11-D seam at 45° Back View

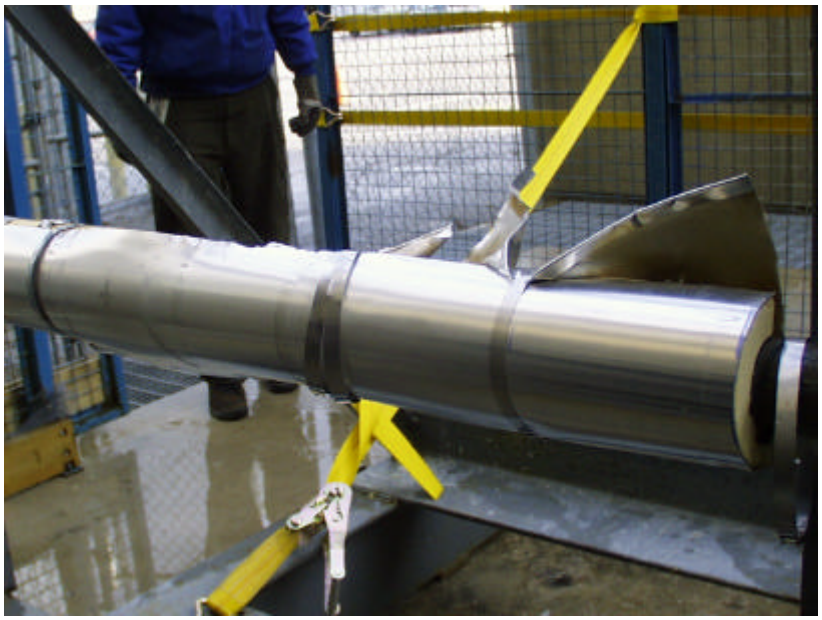

Figure D10 11-D seam at 45° Front View

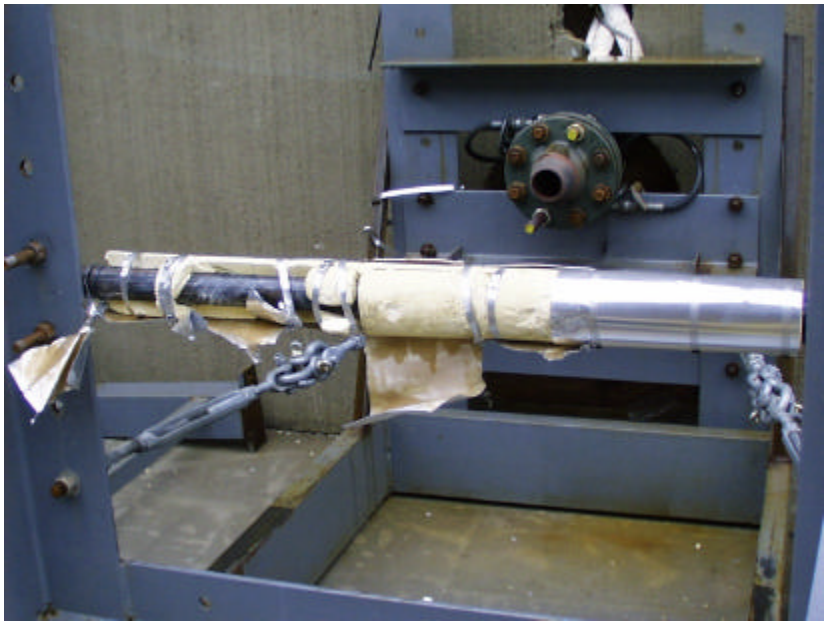

Figure D11 13-D seam at 45° Back View

Figure D12 13-D seam at 45° Recovered Debris

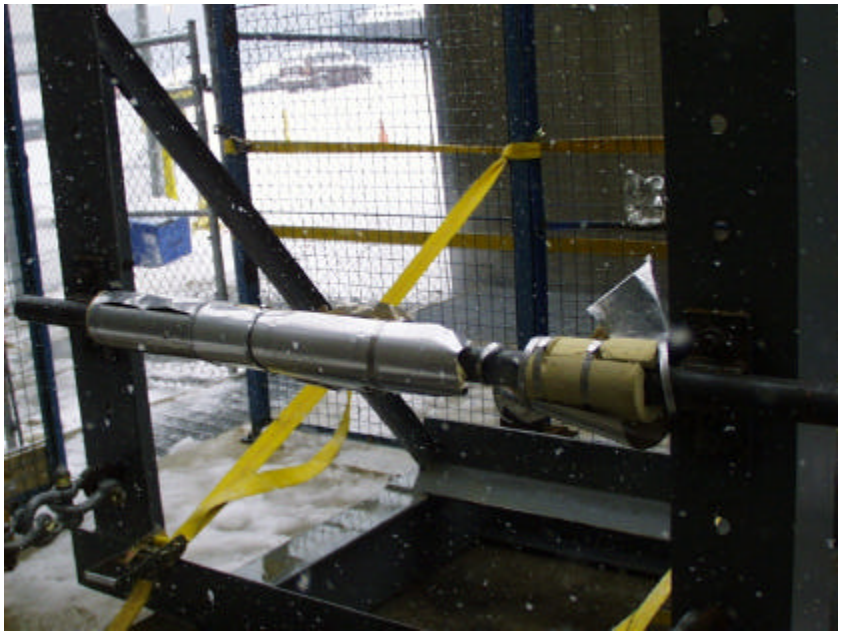

Figure D13 20-D seam at 45° Back View

Figure D14 20-D seam at 45° Front View

Figure D15 3-D Test with Stainless Steel Over- Clad

Figure D16 Typical Pre-Test Target