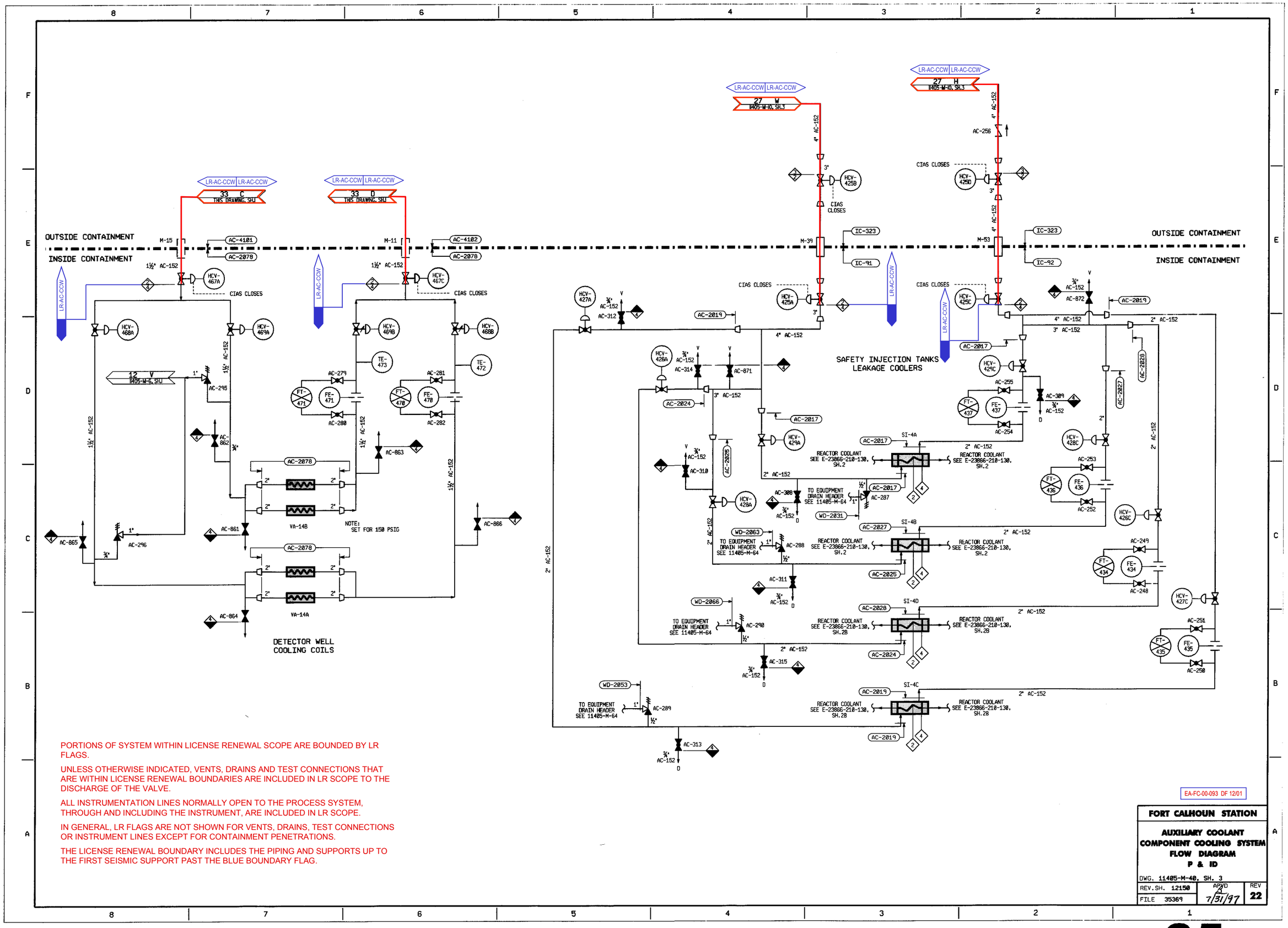

PORTIONS OF SYSTEM WITHIN LICENSE RENEWAL SCOPE ARE BOUNDED BY LR FLAGS.

UNLESS OTHERWISE INDICATED, VENTS, DRAINS AND TEST CONNECTIONS THAT ARE WITHIN LICENSE RENEWAL BOUNDARIES ARE INCLUDED IN LR SCOPE TO THE DISCHARGE OF THE VALVE.

ALL INSTRUMENTATION LINES NORMALLY OPEN TO THE PROCESS SYSTEM, THROUGH AND INCLUDING THE INSTRUMENT, ARE INCLUDED IN LR SCOPE.

IN GENERAL, LR FLAGS ARE NOT SHOWN FOR VENTS, DRAINS, TEST CONNECTIONS OR INSTRUMENT LINES EXCEPT FOR CONTAINMENT PENETRATIONS.

THE LICENSE RENEWAL BOUNDARY INCLUDES THE PIPING AND SUPPORTS UP TO THE FIRST SEISMIC SUPPORT PAST THE BLUE BOUNDARY FLAG.

EA-FC-00-093 DF 12/01

FORT CALHOUN STATION

AUXILIARY COOLANT COMPONENT COOLING SYSTEM FLOW DIAGRAM P & ID

DWG. 11405-M-40, SH. 3

REV.SH. 12150 | APVD 7/31/97 | REV 22

FILE 35369

FOR INFORMATION ONLY

NOTE: THIS PRINT IS TO BE USED FOR THE FCS LICENSE RENEWAL PROJECT ONLY. IT MAY NOT REFLECT THE MOST CURRENT REVISION OF THIS DRAWING.