Duke Energy

W. R. McCollum, Jr.
Vice President

Duke Energy Corporation
Oconee Nuclear Station
7800 Rochester Highway
Seneca, SC 29672
(864) 885-3107 OFFICE
(864) 885-3564 FAX

January 22, 2002

U. S. Nuclear Regulatory Commission
Document Control Desk
Washington, D. C. 20555

Subject: Oconee Nuclear Station
Docket Nos. 50-269, -270, -287
Emergency Plan Implementing Procedures Manual
Volume B, Revision 2002-02

Please find attached for your use and review copies of the revision to the Oconee Nuclear Station Emergency Plan:

Volume B Revision 2002-02 January 2002

This revision is being submitted in accordance with 10 CFR 50-54(q) and does not decrease the effectiveness of the Emergency Plan or the Emergency Plan Implementing Procedures.

Any questions or concerns pertaining to this revision please call Mike Thorne, Emergency Planning Manager at 864-885-3210.

By copy of this letter, two copies of this revision are being provided to the NRC, Region II, Atlanta, Georgia.

Very truly yours,

FOR

W. R. McCollum, Jr.
VP, Oconee Nuclear Site

xc: (w/2 copies of attachments)
Mr. Luis Reyes,
Regional Administrator, Region II
U. S. Nuclear Regulatory Commission
61 Forsyth St., SW, Suite 24T23
Atlanta, Georgia 30303

w/copy of attachments
Mr. Steven Baggett
Rockville, Maryland

(w/o Attachments, Oconee Nuclear Station)
NRC Resident Inspector
M. D. Thorne, Manager, Emergency Planning

A045

January 22, 2002

OCONEE NUCLEAR SITE

SUBJECT: Emergency Plan Implementing Procedures
Volume B, Revision 2002-02

Please make the following changes to the Emergency Plan, Volume B by following these instructions.

REMOVE	ADD
Cover Sheet Rev. 2002-01	Cover Sheet Rev. 2002-02
Table of Contents page 1	Table of Contents page 1
CP/1/A/2002/004C - 03/15/01	CP/1/A/2002/004C - 01/08/02
CP/2/A/2002/004C - 03/15/01	CP/2/A/2002/004C - 01/08/02
CP/3/A/2002/004C - 03/15/01	CP/3/A/2002/004C - 01/08/02

DUKE POWER

EMERGENCY PLAN
IMPLEMENTING PROCEDURES
VOLUME B

APPROVED:

W. W. Foster

W. W. Foster, Manager
Safety Assurance

1/22/02

Date Approved

01/22/02

Effective Date

VOLUME B
REVISION 2002-02
January 2002

VOLUME B
TABLE OF CONTENTS

(R04-01)

Duke Power Company
PROCEDURE PROCESS RECORD

(1) ID No. CP/1/A/2002/004 C
Revision No. 21

Continuous Use

INFORMATION ONLY

PREPARATION

(2) Station Oconee Nuclear Station

(3) Procedure Title Operating Procedure for the Post Accident Liquid Sampling (PALSS)

(4) Prepared By [signature] Date 10-8-01

(5) Requires NSD 228 Applicability Determination?
- ☑ Yes (New procedure or revision with major changes)
- ☐ No (Revision with minor changes)
- ☐ No (To incorporate previously approved changes)

(6) Reviewed By [signature] (QR) Date 1-7-02
Cross-Disciplinary Review By _____ (QR) NA ~~NC~~ Date _____
Reactivity Mgmt. Review By _____ (QR) NA ~~NC~~ Date _____
Mgmt. Involvement Review By _____ (Ops. Supt.) NA ~~NC~~ Date _____

(7) Additional Reviews
QA Review By _____ Date _____
Reviewed By _____ Date _____
Reviewed By _____ Date _____

(8) Temporary Approval *(if necessary)*
By _____ (OSM/QR) Date _____
By _____ (QR) Date _____

(9) Approved By Dale White for BLN Date 1-8-2002

PERFORMANCE ***(Compare with control copy every 14 calendar days while work is being performed.)***

(10) Compared with Control Copy _____ Date _____
Compared with Control Copy _____ Date _____
Compared with Control Copy _____ Date _____

(11) Date(s) Performed _____
Work Order Number (WO#) _____

COMPLETION

(12) Procedure Completion Verification
- ☐ Yes ☐ NA Check lists and/or blanks initialed, signed, dated, or filled in NA, as appropriate?
- ☐ Yes ☐ NA Required enclosures attached?
- ☐ Yes ☐ NA Data sheets attached, completed, dated, and signed?
- ☐ Yes ☐ NA Charts, graphs, etc. attached, dated, identified, and marked?
- ☐ Yes ☐ NA Procedure requirements met?

Verified By _____ Date _____

(13) Procedure Completion Approved _____ Date _____

(14) Remarks ***(Attach additional pages, if necessary)***

Operating Procedure for the Post Accident Liquid Sampling System (PALSS)

NOTE:
1. This **entire** procedure supports an AP or EOP action. The procedure will require AP/EOP validation per NSD 705.
2. Seven Control copies and one Information Only copy of this procedure shall be routed to the Emergency Preparedness Team within three working days after any approved changes.

1. Purpose

The post accident liquid sampling system (PALSS) provides the capability to obtain a primary coolant sample via the HPI Letdown, LPI Pump Discharge or the RCS "J" leg during a nuclear reactor accident condition(s) as described in the FSAR and in accordance with NUREG-0737.

2. Limits and Precautions

☐ 2.1 This procedure should be used to operate PALSS to sample the Reactor Coolant System under the following conditions:

2.1.1 Post Accident.

2.1.2 Inaccessibility of (routine) Primary Sampling Area **AND/OR** HPI Letdown Sampling not possible.

2.1.3 Request from the Chemistry Manager or his designee.

☐ 2.2 Under accident conditions, valve alignments shall **NOT** be made and samples shall **NOT** be taken without prior authorization from the Emergency Coordinator **OR** the TSC/OSC! (Containment isolation valves may be closed upon ES actuation, see Enclosure 7.6.)

☐ 2.3 Under accident conditions, do **NOT** attempt any phase of sampling **OR** analysis without Radiation Protection job coverage!

☐ 2.4 Consider portable shielding, remote handling equipment, video equipment, etc., where, practical or available during sampling, sample preparation, and sample analysis.

☐ 2.5 Chemistry personnel shall operate only those valves operated by the Control Panel **OR** via the sample panel unless clearly specified otherwise in this procedure.

☐ 2.6 **IF** power is **NOT** available at the PALSS Control Panel, return to a low dose area and contact Chemistry management.

2.6.1 Refer to Enclosure 7.5 and troubleshoot as required to determine source of problem.

2.6.2 Notify the OSC/TSC.

2.6.3 **IF** necessary, request the OSC have Operations ensure the following breakers are closed (to ensure power availability).

- 1L2 Bkr. #39 Sampling/Control Panels Power Supply (located next to U2 sampling panel)
- MCC1XL Bkr. for 1DW-278 (DW Flush Supply to Post Accident Sample) (PALSS Control Panel)

CAUTION: Chemical hazards shall be known prior to use. For additional information and first aid requirements, refer to the MSDS sheet.

☐ 2.7 Personal protective requirements for chemicals used in this procedure are pH buffers 4.0, 7.0, and 10.0:

- lab coat
- gloves (rubber/vinyl)
- chemical splash goggles

☐ 2.8 **WHEN** flushing the desired sample to the waste tanks, request Operations add a second compressor on the GWD header because fresh fission gasses may cause a serious problem in the Aux. Building.

- **IF** possible, this increased vacuum should be maintained until sampling is complete.

☐ 2.9 All sample vials should be cleaned and rinsed to protect against chloride contamination.

- Do **NOT** place bare finger tips on the surface of the septum.

3. Apparatus

3.1 A minimum of 4 Lockable Glass (Gas) Syringes (1 to 2 ml size only)

3.2 Liquid Sample Carrier (Bucket, Etc.), Gas Syringe Carrier

3.3 Watch or Lab Timer

3.4 Plastic Bags

3.5 15 - 40cc Evacuated Sample Vial(s) for Liquid Sample

3.6 Nitrogen Supply Bottle with > 600 psi available. (with Two Stage Regulator; 0 to 200 psig on Delivery Stage) replace as required

4. Reagents

4.1 Buffer Solutions - Use purchased 4.00, 7.00 and/or 10.00 buffers or equivalent

5. Procedure

5.1 Prerequisites and Panel Preparation (preliminary)

5.1.1 Initiate Enclosure 7.7.

5.1.2 **IF** routing waste to the RBES or sampling from the RCS "J" Leg:

- Take Enclosure 7.6 to the responsible individual in Operations (designated by the OSC) for completion.
- Request Operations complete the appropriate step(s) of Enclosure 7.6.

5.1.3 Label glass vial(s) for collecting the liquid sample.

5.2 Panel Preparation (prior to sampling)

NOTE: **IF** any item on the control or sample panel is not clearly identified, refer to Enclosure 7.1 and 7.2.

☐ 5.2.1 Inform the U-1 Control Room that sampling of the RCS will be done via the PALSS panel.

- Identify the flowpath J-Leg, LPI **OR** Letdown.
- Recommend an extra waste gas compressor be placed into service.

Operator Notified: _____

☐ 5.2.2 At the Control Panel, ensure that SW 1 (valve power switch), is in the "OFF" position.

- Ensure PALSS safety switch is "ON".

CAUTION: Make the mating of connector cable 1 to connector 1 on the Junction Box the LAST cable connection made. **IF** this is not done last, the exposed pins of the other cables may become energized and become an electrical hazard.

☐ 5.2.3 Position the Control Panel using RP as a guideline, in the lowest dose area possible.

☐ 5.2.4 **IF** necessary, route and connect the six required cables (CON 6 - CON 1) from the Control Panel to the Junction Box, starting with connector 6 and ending with connector 1.

☐ 5.2.4.1 Connect CON-6 cable at both ends.

☐ 5.2.4.2 Connect CON-5 cable at both ends.

☐ 5.2.4.3 Connect CON-4 cable at both ends.

☐ 5.2.4.4 Connect CON-3 cable at both ends.

☐ 5.2.4.5 Connect CON-2 cable at both ends.

☐ 5.2.4.6 Connect CON-1 cable at the PALSS control panel end.

☐ 5.2.4.7 Connect CON-1 cable to the junction box last.

☐ 5.2.5 Ensure off all control and solenoid valves (no lights).

5.2.6 Position the following valves: (outside of Sample Panel)

CAUTION: Nitrogen cylinder must be replaced if pressure is < 600 psig in order to prevent backflow of fission gas into the cylinder.

☐ Open valve(s) on Nitrogen Supply Bottle (> 600 psi tank pressure required & ~100 psi delivery pressure)

☐ **IF** necessary, replace cylinder.

☐ Open 1IA-2423 (IA Supply to Post Accident Sample Panel).

NOTE: The following switches are found on the PALSS Control Panel.

☐ 5.2.7 Turn system power on by inserting Control Panel Key into (KS 1) Key Lock Switch and turning the key.

NOTE: The lights in the middle of each switch which controls a valve should be "OFF". The green lights should be "LIT" on the push-button switches, (PB 1) through (PB 8).

☐ 5.2.8 Ensure all lamps on the Control Panel are functioning by turning ON SW 2 (lamp test switch).

5.2.9 Make note of **OR** repair any not functioning properly. (The lamp test switch does not light).

☐ 5.2.9.1 Turn SW 2 (lamp test switch) to "OFF".

☐ 5.2.10 Turn SW 1 (valve power switch) to the "ON" Position.

NOTE: In an accident situation, waste will be routed to the RBES unless otherwise directed by supervision. The alternate route is the HAWT via PB1 (1LP-130).

_____ 5.2.11 **IF** routing waste to the RBES, open PB2 (1LP-65, 1B Emerg Sump Line Drn Blk).

_____ 5.2.12 **IF** routing waste to the HAWT, open PB1 (1LP-130, Sample Return to HAWT).

5.3 Panel Preparation (pH Meter Standardization) (PALSS Control Panel)

5.3.1 Purge the pH housing with Nitrogen as follows:

NOTE: All other control valves must be closed.

☐ 5.3.1.1 Open 204

☐ 5.3.1.2 Open 206

☐ 5.3.1.3 Open 103

☐ 5.3.1.4 Open 102

☐ 5.3.1.5 Open 105

☐ 5.3.1.6 Open 202

☐ 5.3.1.7 Wait at least 2 minutes, close 105.

5.3.2 Pressurize Buffer Tank A as follows:

NOTE: SV 209 controls both buffer tanks (A and B).

☐ 5.3.2.1 Place 209 in the 'A' position.

☐ 5.3.2.2 Wait at least 30 seconds., then place 209 in the "OFF" position.

☐ 5.3.2.3 Close 202

5.3.3 Evacuate pH housing as follows:

☐ 5.3.3.1 Open 208

☐ 5.3.3.2 Open 201

☐ 5.3.3.3 **WHEN** the pressure on PG 4 stabilizes (normally < 2.0 PSIA),

☐ A. Close 201

☐ B. Record the pH Housing pressure from PG 4 **OR** PG 5.

pH Housing Pressure for A Buffer = _____ PSIA

☐ 5.3.3.4 Close 102

☐ 5.3.3.5 Close 103

☐ 5.3.3.6 Close 206

☐ 5.3.3.7 Close 204

☐ 5.3.3.8 Close 208

5.3.4 Transfer A Buffer into the pH housing as follows:

☐ 5.3.4.1 Place 209 in the 'A' position.

☐ 5.3.4.2 Wait at least 1 minute, then place 209 in the "OFF" position.

5.3.5 Standardize the pH meter as follows:

NOTE:
1. The following keys are located on the pH meter in the face of the PALSS control panel.
2. Refer to Enclosure 7.8 for pH meter key descriptions.

5.3.5.1 Use the "menu" key to move to the main menu. The display will show: ("Configuration, Calibration, Maintenance, I/O Setup").

5.3.5.2 Using the "arrow up or down" keys, move to and highlight "Calibration".

5.3.5.3 Press "enter".

5.3.5.4 Using the "arrow up or down" keys, move to and highlight "Calibration / Buffer Calibration pH", then press Enter.

5.3.5.5 Press the "Hold" key.

5.3.5.6 Press the "next" key to move to the next screen.

NOTE:
- A flashing value indicates the probe may be broken.
- A value that **CANNOT** be adjusted to within ± .5 pH offset will make the unit return to the calibration screen, indicating that the pH electrode may need to be replaced.

5.3.5.7 The display will show the pH of the 'A' buffer solution.

5.3.5.8 Wait for a stable reading. Press the up or down arrow once to activate the side to side arrows. Then using the "function keys, side to side" select the desired digit space and change the value on the display using the "arrow up and down" keys to match the actual 'A' buffer pH.

5.3.5.9 **WHEN** the unit display indicates the buffer pH, press the "ENTER" key.

5.3.5.10 Record the pH meter value set for the 'A' buffer pH.

'A' Buffer Solution pH _____

5.3.5.11 **WHEN** the unit successfully meets the preset specifications and the entered buffer value is displayed, press "next" until the screen with the following is visible:

SLOPE

Note: Buffer must be > 2 pH units away from the STD buffer.

NOTE: The unit should still be in the "hold" mode.

5.3.5.12 Press "next". The following screen should be visible:

SLOPE

Place electrode in Buffer Attention.
Wait for Stable Reading!

5.3.6 Flush the pH housing with DW as follows:

☐ 5.3.6.1 Open 101

☐ 5.3.6.2 Open 102

☐ 5.3.6.3 Open 105

☐ 5.3.6.4 Open PB-6 (1DW-278, DW Flush Supply to Post Accident Sample).

☐ 5.3.6.5 Wait at least 5 minutes, close 101.

☐ 5.3.6.6 Close PB-6 (1DW-278, DW Flush Supply to Post Accident Sample).

5.3.7 Purge the demineralized water out of the pH housing with nitrogen as follows:

- ☐ 5.3.7.1 Open 202
- ☐ 5.3.7.2 Open 204
- ☐ 5.3.7.3 Open 206
- ☐ 5.3.7.4 Open 103
- ☐ 5.3.7.5 Place 209 in the 'A' position.
- ☐ 5.3.7.6 Place 209 in the "OFF" position.
- ☐ 5.3.7.7 After at least 2 minutes, close 105.

5.3.8 Pressurize Buffer Tank B as follows:

- ☐ 5.3.8.1 Place 209 in the 'B' position.
- ☐ 5.3.8.2 Wait at least 30 seconds, place 209 in the "OFF" position.
- ☐ 5.3.8.3 Close 202

5.3.9 Evacuate pH housing as follows:

- ☐ 5.3.9.1 Open 208
- ☐ 5.3.9.2 Open 201
- ☐ 5.3.9.3 **WHEN** the pressure on PG 4 stabilizes (normally < 2.0 PSIA), close 201.
- ☐ 5.3.9.4 Record pH Housing pressure from PG 4.

  pH Housing Pressure for B Buffer = _____ PSIA
- ☐ 5.3.9.5 Close 102
- ☐ 5.3.9.6 Close 103
- ☐ 5.3.9.7 Close 206
- ☐ 5.3.9.8 Close 204
- ☐ 5.3.9.9 Close 208

5.3.10 Transfer B Buffer into the pH housing as follows:

☐ 5.3.10.1 Place 209 in the 'B' position.

☐ 5.3.10.2 Wait at least 1 minute, place 209 in the "OFF" position.

5.3.11 Calibrate the pH meter as follows: (pH meter on the face of the PALSS Control Panel)

NOTE:
1. Refer to Enclosure 7.8 for pH meter key description.
2. The unit should still be in the "HOLD" mode. This key causes the pH meter to maintain a constant output and alarm condition. This allows the electrode to be removed (optional) for calibration in a buffer without process upset. The temperature compensation feature is also disabled in the "HOLD" mode (this allows calibration of the meter to the particular temperature of the buffer used).

5.3.11.1 Press "next". The display will show the pH of the 'B' buffer as measured by the electrode.

5.3.11.2 Wait for a stable reading. Press the up or down arrow once to activate the side to side arrows. Then select the desired digit space using the "function keys side to side".

5.3.11.3 Adjust the value on the display using the "arrow up and down" keys, until the display matches the actual pH of the buffer solution.

5.3.11.4 Press "enter". This will set the instrument slope.

5.3.11.5 Record the pH meter value set for the 'B' buffer pH.

'B' Buffer Solution pH _____

5.3.11.6 **IF** the slope adjustment was successful, the Completed screen will be displayed:

SLOPE
Slope Completed
Slope Buffer Value Saved

5.3.11.7 Using the "hold" key, take the unit out of the hold mode.

NOTE:	**IF** the calibration was not successful, the menu will return to the original Calibration Menu by itself and display an error code.

5.3.11.8 Use the "next" key to rotate back to the original Calibration menu screen.

5.3.11.9 Press the "Display" key. The pH meter is now in the sample measurement mode.

5.3.12 Flush the pH housing with DW as follows:

- ☐ 5.3.12.1 Open 101
- ☐ 5.3.12.2 Open 102
- ☐ 5.3.12.3 Open 105
- ☐ 5.3.12.4 Open PB 6 (1DW-278, DW Flush Supply to Post Accident Sample)
- ☐ 5.3.12.5 Wait ≥ 3 minutes, close 101.
- ☐ 5.3.12.6 Close PB 6 (1DW-278, DW Flush Supply to Post Accident Sample)

5.3.13 Purge the demineralized water out of the pH housing with nitrogen as follows:

- ☐ 5.3.13.1 Open 202
- ☐ 5.3.13.2 Open 204
- ☐ 5.3.13.3 Open 206
- ☐ 5.3.13.4 Open 103
- ☐ 5.3.13.5 Wait ≥ 2 minutes **OR** until pressure on PG 3 drops rapidly (below 50 psi), then close 105.
- ☐ 5.3.13.6 Place the 209 in the 'B' position.
- ☐ 5.3.13.7 Place the 209 in the "OFF" position.
- ☐ 5.3.13.8 Close 202
- ☐ 5.3.13.9 Close 204

☐ 5.3.13.10 Close 206

☐ 5.3.13.11 Close 103

☐ 5.3.13.12 Close 102

5.4 Panel Preparation (pH Housing and Gas Tank(s) Evacuation) (PALSS Control Panel)

5.4.1 Evacuate pH housing and gas tanks as follows:

☐ 5.4.1.1 Open 208

☐ 5.4.1.2 Open 201

☐ 5.4.1.3 Open 203

☐ 5.4.1.4 Open 204

☐ 5.4.1.5 Open 205

☐ 5.4.1.6 Open 206

☐ 5.4.1.7 Open 207

☐ 5.4.1.8 Open 103

☐ 5.4.1.9 Open 102

☐ 5.4.1.10 Monitor the pressure in the pH housing and gas tanks on PG 5 **OR** PG 4.

- **WHEN** the pressure stabilizes (normally < 2.0 PSIA), close 201.

☐ 5.4.1.11 Close 208

5.4.2 pH Housing Pressure

☐ 5.4.2.1 Record pH Housing pressure from PG 5 (alternate PG 4).

pH Housing Pressure _____ PSIA

☐ 5.4.2.2 Close 102

☐ 5.4.2.3 Close 103

☐ 5.4.2.4 Close 206

☐ 5.4.2.5 Close 207

5.4.3 30 ml and 500 ml Gas Tanks Pressure

☐ 5.4.3.1 Record gas tank pressures from PG 5 (alternate PG 4).

Gas tanks (30ml and 500ml) pressure _____ PSIA

☐ 5.4.3.2 Close 205

☐ 5.4.3.3 Close 204

☐ 5.4.3.4 Close 203

5.5 Panel Operation (Reactor Coolant Sample Flush/Acquisition) (PALSS Control Panel)

NOTE: The sample will be taken via the LPI pump discharge, HPI Letdown, or the RCS "J-Leg" sample point.

CAUTION:
1. PB 6 (1DW-278) must be closed to prevent flow of RCS into the demineralized water header.
2. CV-102 and CV-105 must be closed to prevent overpressurization and failure of the pH housing.

5.5.1 Ensure closed the following valves:

☐ 5.5.1.1 Close PB-6 (1DW-278, DW Flush Supply to Post Accident Sample).

☐ 5.5.1.2 Close 102

☐ 5.5.1.3 Close 105

☐ 5.5.2 Ensure SS 3 (selector switch) is in the "PT 1" position.

_____ 5.5.3 **IF** sampling the RCS "J-Leg", then open PB 4 (1RC-179, Post Accident Sample Block).

_____ 5.5.4 **IF** sampling the LPI pump Discharge, then open PB 3 (1LP-126, Isolation for LP Sample).

_____ 5.5.5 **IF** sampling the HPI Letdown, then open PB 5 (1LP-124, Isolation for HP Sample (Letdown)).

☐ 5.5.6 Open 101

☐ 5.5.7 Open 104

CAUTION: Monitor PG 3 to ensure that the outlet pressure does **NOT** exceed 600 PSIG. Adjust slowly.

☐ 5.5.8 Open 401 to establish the maximum flow without exceeding 600 PSIG on PG 3.

☐ 5.5.9 Record the flowrate from FG1 _____ gpm.

☐ 5.5.10 Record the pressure from PG 3 _____ psig.

5.5.11 **IF** LT 3 (clogged filter light switch) comes on and remains on, but flow on FG-1 is > 1.5 gpm, continue with procedure.

- **IF** flow is < 1.5 gpm, contact Chemistry Staff for further instructions.
- **IF** directed by management, proceed to Enclosure 7.3.

☐ 5.5.12 Select the desired thermocouple to monitor the inlet **OR** outlet of the sample **OR** the cooling water using SS 1:

TE 1 - Measures sample inlet to heat exchanges.

TE 2 - Measures sample return from heat exchanger.

TE 3 - Measures cooling water inlet to heat exchanger.

TE 4 - Measures cooling water return from heat exchanger.

☐ 5.5.12.1 Switch SS 1 to "TE 1"

☐ 5.5.12.2 Record sample inlet temperature on TG 1.

INLET TEMPERATURE _____°F

☐ 5.5.12.3 Switch SS 1 to "TE 2".

☐ 5.5.12.4 Record sample outlet temperature on TG 2.

OUTLET TEMPERATURE _____°

5.5.13 After > 15 gallons have flowed through the system (calculate time based on FG-1 reading):

☐ 5.5.13.1 Slowly throttle 401 until fully closed.

☐ 5.5.13.2 Immediately close 104

☐ 5.5.13.3 Immediately close 101

☐ 5.5.13.4 Record 500 ml liquid tank pressure from PG 1.

Pressure = _____ PSIG

☐ 5.5.14 Move selector switch SS 3 to the "PT 2" position to measure discharge pressure of the injection valves.

NOTE: There are two continuous flow paths through the sample valve(s). When the valve(s) is opened, the sample loop is moved to the sample flow path. When the valve(s) is closed, the sample loop is moved to the sample injection (collection) flow path.

5.5.15 Ensure open the desired sample injection valve(s) of the 0.1 ml, 1 ml and/or 5 ml loop, respectively (normally the 5 ml and 1 ml loop are used):

☐ 503 (0.1 ml Loop)

☐ 502 (1 ml Loop)

☐ 501 (5 ml Loop)

☐ 5.5.16 Open 107

☐ 5.5.17 Slowly open 402 keeping flowrate on FG 2 < 300 ml/min.

NOTE: Greater than 40 PSIG sample pressure must be supplied to the injection valves.

5.5.18 After ≥ 5 minutes, close the sample injection valve(s) opened in Step 5.5.15.

☐ 503 (0.1 ml Loop)

☐ 502 (1 ml Loop)

☐ 501 (5 ml Loop)

5.5.19 Record sample time: _____

_____ 5.5.20 Close the sample valve selected in Step 5.5.3 or 5.5.4 or 5.5.5

- PB 4 (1RC-179, Post Accident Sample Block)
- PB 3 (1LP-126, Isolation for LP Sample)
- PB 5 (1LP-124, Isolation for HP Sample (Letdown))

☐ 5.5.21 After 1 minute, close 402.

CAUTION: **IF** the pressure on PG-1 is > 100 psi or is increasing with time, contact Chemistry Staff and notify that RCS is leaking by sample valve.

☐ 5.5.22 After 1 minute, record the pressure on PG-1: _____psi

☐ 5.5.23 Close 107

5.6 Depressurization (PALSS Control Panel)

☐ 5.6.1 Ensure SS 3 (selector switch) is in the "PT 1" position.

☐ 5.6.2 Ensure closed 206

☐ 5.6.3 Ensure closed 207

☐ 5.6.4 Open 103

☐ 5.6.5 Wait ≥ 2 minutes.

NOTE: Pressure on PG 1 should be < 50 PSIG.

☐ 5.6.6 Record the pressure from PG 1 _____ PSIG.

5.7 Gas Collection (PALSS Control Panel)

5.7.1 Verify pressure in the 30 ml and 500 ml gas tank is ≤ 2.0 PSIA.

For 500 ml Gas Tank:

☐ 5.7.1.1 Open 205

☐ 5.7.1.2 Open 203

☐ 5.7.1.3 Record PG 5 (alternate gauge PG 4).

500 ml Gas Tank Pressure _____

☐ 5.7.1.4 Close 205

☐ 5.7.1.5 Close 203

For 30 ml Gas Tank:

☐ 5.7.1.6 Open 204

☐ 5.7.1.7 Open 203

☐ 5.7.1.8 Record PG 5 (alternate gauge PG 4).

30 ml Gas Tank Pressure _____

☐ 5.7.1.9 Close 204

☐ 5.7.1.10 Close 203

5.7.2 **IF** the pressure in the 30 ml and 500 ml Gas Tank is ≤ 2.0 PSIA, proceed to Step 5.7.5 **IF** the Nitrogen stripping method is to be used for gas collection and analysis.

5.7.3 **IF** the alternate method (Total Gas Method) is to be used, proceed to Step 5.7.6.

☐ 5.7.4 **IF** the pressure in the 30 ml **OR** 500 ml Gas Tank is > 2.0 PSIA, then evacuation of the tanks must be repeated as follows:

☐ 5.7.4.1 Close 103

☐ 5.7.4.2 Open 204

☐ 5.7.4.3 Open 205

☐ 5.7.4.4 Open 201

☐ 5.7.4.5 Open 208

☐ 5.7.4.6 Open 203

5.7.4.7 **WHEN** the reading from PG 5 (alternate gauge PG 4) is ≤ 2.0 PSIA, close

☐ A. 204

☐ B. 205

☐ C. 201

☐ D. 208

☐ E. 203

☐ 5.7.4.8 Open 103

5.7.4.9 **IF** the Nitrogen stripping method is to be used for gas collection and analysis, continue with Step 5.7.5.

5.7.4.10 **IF** the alternate method (Total Gas Method) is to be used, proceed to Step 5.7.6.

NOTE: Nitrogen Stripping Method is the typical method.

5.7.5 Nitrogen Stripping Method (Gas Analysis)

☐ 5.7.5.1 Ensure closed 205

☐ 5.7.5.2 Open 207

☐ 5.7.5.3 Open 106

NOTE: The pressure on PG-1 should be monitored for an increase of approximately 15 psi. Because PT-1 is a high range pressure transmitter the indicated reading on PG-1 will vary from calibration to calibration and may indicate anywhere from -15 to 15 psi initially.

☐ 5.7.5.4 For a 10 minute interval, periodically turn on 109 to vibrate 500 ml liquid tank, monitor the pressure on PG 1 (switch SS 3 to "PT 1").

☐ 5.7.5.5 Close 106

☐ 5.7.5.6 Open 205

☐ 5.7.5.7 Open 204

5.7.5.8 After ≥ 5 minutes when PG 4 (alternate PG 1) stabilizes, close:

☐ A. 204

☐ B. 205

☐ C. 207

☐ D. 103

5.7.5.9 Proceed to Section 5.8.

NOTE: Calculated method should be used only as an alternate.

5.7.6 Total Gas Method (Calculated)

☐ 5.7.6.1 Monitor PG 4.

☐ 5.7.6.2 **WHEN** the pressure shown on PG 4 is < 30 PSIA, the low range pressure transmitter, PT 5, can be used to obtain a more accurate pressure measurement.

- PT 5 can be used by opening 203.

☐ 5.7.6.3 Ensure SS 2 switch is in the "RD 2" position.

☐ 5.7.6.4 Record the initial temperature reading from TG 2 and pressure reading from PG 5.

TG 2 Init. Temp. Reading _____°F

PG 5 Init. Press. Reading _____ PSIA

☐ 5.7.6.5 Open 206

☐ 5.7.6.6 Open 204

☐ 5.7.6.7 Turn on the vibrator using 109 and monitor PG 5.

☐ 5.7.6.8 **WHEN** the pressure of the 30 ml gas tank stabilizes, record the final pressure and temperature.

TG 2 Final Temp. Reading _____°F

PG 5 Final Press. Reading _____ PSIA

☐ 5.7.6.9 Close 203

☐ 5.7.6.10 Close 204

☐ 5.7.6.11 Close 206

☐ 5.7.6.12 Ensure 109 is off.

☐ 5.7.6.13 Close 103

☐ 5.7.6.14 Calculate the total amount of H_2 in the sample using Enclosure 7.4.

☐ 5.7.6.15 Report results on Enclosure 7.7.

5.8 Sample pH Measurement (PALSS Control Panel)

☐ 5.8.1 Ensure closed 206

☐ 5.8.2 Ensure closed 204

☐ 5.8.3 Ensure SS 3 switch is set on PT 1.

5.8.4 Pressurize liquid tank to at least 60 PSIG as monitored on PG 1 (alternate PG 4), as follows:

☐ 5.8.4.1 Open 202

☐ 5.8.4.2 Open 205

☐ 5.8.4.3 Open 207

☐ 5.8.4.4 Open 103

☐ 5.8.4.5 After 30 seconds, close 103.

☐ 5.8.4.6 Close 207

☐ 5.8.4.7 Close 205

☐ 5.8.4.8 Close 202

☐ 5.8.5 Open 102

5.8.6 Record pH on Enclosure 7.7.

☐ 5.8.7 Close 102

5.8.8 Notify OSC that RCS sampling via the PALSS is completed and that sample retrieval will begin following system flush.

OSC Person Notified: _____

5.9 System Flush (PALSS Control Panel)

NOTE: Directions regarding sample panel flushing will be determined by management.

5.9.1 Ensure 204 and 206 remain closed and the sample injection valve(s) selected (501, 502 and/or 503) is turned off.

5.9.2 **IF** either LT 1 **OR** LT 2 indicator is illuminated:

☐ 5.9.2.1 Open 108

☐ 5.9.2.2 Turn on 110 (sump pump).

☐ 5.9.2.3 **WHEN** both LT1 and LT2 are out, close 108.

☐ 5.9.2.4 Turn off 110 (sump pump).

5.9.3 **IF** given the direction to flush the panel, flush the 500 ml liquid tank, pH housing, and sample injection valves as follows:

500 ml Liquid Tank

☐ 5.9.3.1 Open 101

☐ 5.9.3.2 Open 104

☐ 5.9.3.3 Open 401

☐ 5.9.3.4 Open PB 6 (1DW-278, DW Flush Supply to Post Accident Sample)

pH Housing

☐ 5.9.3.5 Open 102

☐ 5.9.3.6 Open 105

Sample Injection Valves

☐ 5.9.3.7 Open 107

☐ 5.9.3.8 Open 402

☐ 5.9.3.9 Flush the sample panel until the general area dose rate on the exterior of the panel is ≤ 2 mR/hr **OR** a satisfactory level is achieved per RP.

☐ 5.9.3.10 Close 402

☐ 5.9.3.11 Close 107

☐ 5.9.3.12 Close 105

☐ 5.9.3.13 Close 102

☐ 5.9.3.14 Close 101

☐ 5.9.3.15 Close 104

☐ 5.9.3.16 Close 401

☐ 5.9.3.17 Close PB 6 (1DW-278, DW Flush Supply to Post Accident Sample)

5.10 Liquid & Gas Sample Retrieval (PALSS Control Panel)

Liquid Sample Retrieval

☐ 5.10.1 Ensure open the waste route selected in Step 5.2.11 or 5.2.12:

- PB 1 (1LP-130, Sample Return to HAWT)

OR • PB 2 (1LP-121, 1B Emerg Sump Line Drn Blk).

☐ 5.10.2 Ensure closed all other PB valves (motor operated).

☐ 5.10.3 **IF** LT 1 **OR** LT 2 is illuminated, perform Step 5.9.1.

☐ 5.10.4 Select the flow path for sample collection by turning CV 612 to the desired injection valve (0.1 ml, 1 ml, or 5 ml loop).

Sample Loop(s) Selected _____

☐ 5.10.5 Slowly turn CV 613 to the "N_2" position.

☐ 5.10.6 After collecting approximately 15 mls of liquid sample, turn CV 613 to the "VENT" position.

☐ 5.10.7 Wait ≥ 10 seconds for sample line depressurization.

☐ 5.10.8 Turn CV 612 to the "OFF" position.

☐ 5.10.9 As necessary for additional sample(s), repeat Steps 5.10.3 through 5.10.7.

Gas Sample Retrieval

☐ 5.10.10 **WHEN** possible, use the gas-tight syringe(s) to retrieve the gas sample(s) from the 30 ml gas tank keeping syringe vertical (needle down).

☐ 5.10.11 **IF** possible, place syringes in the gas locked position and store vertically (needle down).

5.11 30 ml Gas Tank and 500 ml Gas Tank Purge (PALSS Control Panel)

☐ 5.11.1 Verify Nitrogen supply still has ≥ 100 psig delivery pressure.

5.11.2 Allow all of the following valves to stay open ≥ 2 minutes except alternate the valve pairs 204/206 and 205/207 open and close within the 2 minute period:

☐ 5.11.2.1 Open 202

☐ 5.11.2.2 Open 204

☐ 5.11.2.3 Open 205

☐ 5.11.2.4 Open 206

☐ 5.11.2.5 Open 207

☐ 5.11.2.6 Open 103

☐ 5.11.2.7 Open 104

☐ 5.11.2.8 Open 401

☐ 5.11.2.9 After flushing for several seconds, close the following:

A. 204

B. 206

☐ 5.11.2.10 After additional flush for several seconds, open the following:

A. 204

B. 206

☐ 5.11.2.11 Close 205

☐ 5.11.2.12 Close 207

☐ 5.11.2.13 After several seconds, open the following:

A. 205

B. 207

☐ 5.11.2.14 **IF** the valves need further cycling (it has not been ≥ 2 minutes) return to Step 5.11.2.10.

☐ 5.11.2.15 **IF** the time is ≥ 2 minutes, proceed to Step 5.11.3.

☐ 5.11.3 Close 202

☐ 5.11.4 Close 401

☐ 5.11.5 Close 104

☐ 5.11.6 Close 103

☐ 5.11.7 Open 201

☐ 5.11.8 Open 208

5.11.9 After ≥ 10 seconds, close the following:

☐ 5.11.9.1 206

☐ 5.11.9.2 207

☐ 5.11.9.3 204

☐ 5.11.9.4 205

☐ 5.11.9.5 201

☐ 5.11.9.6 208

☐ 5.11.10 Repeat Step 5.11.2 through 5.11.9 until dose rates of 30 ml and 500 ml tank are ≤ 10 mR/hr (at contact) **OR** a satisfactory level is achieved per RP.

5.12 System Shutdown

5.12.1 Ensure closed the following motor operated valves: (PALSS Control Panel)

☐ PB 1 (1LP-130, Sample Return to HAWT)

☐ PB 2 (1LP-121, 1B Emerg Sump Line Drn Blk)

☐ PB 3 (1LP-126, Isolation for LP Sample)

☐ PB 4 (1RC-179, Post Accident Sample Block)

☐ PB 5 (1LP-124, Isolation for HP Sample (Letdown))

☐ PB 6 (1DW-278, DW Flush Supply to Post Accident Sample)

☐ PB 8 (1LP-129, Sample Drain to the High Activity Waste Tank)

5.12.2 Ensure closed the following solenoid valves: (PALSS Control Panel)

☐ 201

☐ 202

☐ 203

☐ 204

☐ 205

☐ 206

☐ 207

☐ 208

☐ 209

5.12.3 Ensure closed the following control valves: (PALSS Control Panel)

- ☐ 101
- ☐ 102
- ☐ 103
- ☐ 104
- ☐ 105
- ☐ 106
- ☐ 107
- ☐ 108

_____ 5.12.4 Return the valve power switch, SW 1, to the "OFF" position.

_____ 5.12.5 Return the key switch, KS 1, to the "OFF" position.

_____ 5.12.6 Close 1IA-2423 (IA Supply to Post Accident Sample Panel) (Outside the PALSS Sample Panel)

_____ 5.12.7 Ensure N_2 cylinder discharge pressure > 600 psi.

- **IF** necessary, replace cylinder.

_____ 5.12.8 Close N_2 Supply Bottle valves (Outside the PALSS Sample Panel)

NOTE: The following cable connections are located between the PALSS Control Panel and the cable junction box.

CAUTION: Make the disconnection of connector cable 1 from the Junction Box the FIRST cable disconnection. **IF** this is not done first, the exposed pins of the other cables may become energized and become an electrical hazard.

☐ 5.12.9 **IF** directed by Chemistry Staff, disconnect the following cables in order:

Staff notified _____ Check below as directed by Staff.

☐ Leave the power cables connected.

☐ Disconnect the power cables connected.

☐ 5.12.9.1 CON-1 from the junction box (this is the first cable disconnect made), then from the PALSS Control Panel.

☐ 5.12.9.2 CON-2 cable at both ends.

☐ 5.12.9.3 CON-3 cable at both ends.

☐ 5.12.9.4 CON-4 cable at both ends.

☐ 5.12.9.5 CON-5 cable at both ends.

☐ 5.12.9.6 CON-6 cable at both ends.

☐ 5.12.10 Store the control panel in the AB 1st floor hallway/corridor within ten (10) feet from the Unit 1 electrical junction box.

☐ 5.12.11 Ensure the control panel wheels are locked to prevent panel movement.

☐ 5.12.12 Ensure CV 609 is in the "AIR" position.

☐ 5.12.13 Ensure CV 610 is in the "NITROGEN" position.

☐ 5.12.14 Inform the OSC that flushing of the PALSS Panel has been completed.

OSC Person Notified: _____

5.13 Sample Analysis

NOTE: Steps 5.13.1 - 5.13.3 can be performed in any order. Substeps must be performed in the order written.

5.13.1 Gas (Nitrogen Stripping Method)

5.13.1.1 Analyze up to four syringes of stripped gas using LM-O-P008 (The Determination of Hydrogen in Gas Samples using the Carle Gas Chromatograph and the Spectra Physics Integrator).

5.13.1.2 Use the following formula to calculate results:

$$\% H_2 \frac{615.72 \text{ cc}}{0.50 \text{ Kg}} \times \frac{1}{100} = \text{cc/Kg } H_2$$

Where: % H_2 is determined from LM-O-P008

615.72 cc = 30 ml gas bomb + 500 ml gas bomb + tubing volume (volume occupied by sample gas).

0.50 Kg = collected sample size

$\frac{1}{100}$ = conversion of percent to decimal

5.13.1.3 Record results in cc/kg H_2 on Enclosure 7.7.

5.13.1.4 **IF** needed, reserve other stripped gas syringes for use as backups **OR** to perform a gas sample gamma spectra.

5.13.2 Liquid

5.13.2.1 Submit sample to count room for gamma spectra analysis. The sample may be counted in the rheodyne sample vial using the loop volume (preferred) or in a 50 ml bottle. **IF** a 50 ml bottle is used, refer to the following table for preparation guidelines:

PALSS Loop Size	Gamma Spectra Volume Ratio	Dilute sample from PALSS with demin. To: (mls)	mls of diluted sample to dilute to 50 mls for gamma spectra analysis
5.24	5/45	50	(50/5.24)*5 or ~ 48
5.24	1/49	100	(100/5.24)*1 or ~19
1.04	1/49	50	(50/1.04)*1 or ~48
1.04	.5/49.5	100	(100/1.04)*0.5 or ~48
0.10058	.1/49.9	50	(50/0.10058)*0.1 or ~50

5.13.2.2 Record results in mCi/ml on Enclosure 7.7 and attach GeLi Spectra.

5.13.2.3 Analyze PALSS sample for boron.

- To obtain a boron concentration that will correlate directly with the normal RCS, the dilution factor must be multiplied by the analyzed sample concentration (obtained from the Boron Titration).

$$\text{ppm B} = \text{measured ppm B} \times \frac{\text{Total dilution volume (sample loop + dilution water), mls}}{\text{sample loop volume, mls}}$$

5.13.2.4 Record results of boron sample analysis on Enclosure 7.7.

5.13.2.5 Perform a chloride analysis of the sample.

- To obtain a Cl concentration that will correlate directly with the normal RCS, the dilution factor must be multiplied by the analyzed sample concentration.

$$\text{ppb Cl} = \text{measured ppb Cl} \times \frac{\text{Total dilution volume (sample loop + dilution water), mls}}{\text{sample loop volume, mls}}$$

NOTE: **IF** the Cl results are below the Limit of detection (LOD) for the Cl analysis, multiply the LOQ by the dilution factor for reporting purposes (record as "< LOQ * dilution factor" instead of "T0").

5.13.2.6 Record results on Enclosure 7.7.

5.13.2.7 **IF** needed, reserve any remaining liquid sample for use as a backup.

5.13.3 **IF** approved by OSC & RP, prepare Panel for next use by performing the following: (PALSS Sample Panel)

- Fill buffer tanks(s) with ~ 600 mls of buffer solution for calibrating the pH meter.
  - This solution will be pressurized with nitrogen gas to at least 60 psig using the nitrogen purge system inside the PALSS sample panel.
  - Connect tank(s) to quick connect fittings inside sample panel.

NOTE:
1. Always fill Buffer Tank A with a pH 7 buffer. Buffer Tank B should be filled with a pH 4 buffer if expected pH < 7.0 **OR** a pH 10 buffer if expected pH > 7.0.
2. Buffer tanks may be pre-prepared and stored inside of PALSS sample panel. Verify that buffer expiration dates have not been exceeded.

- Fill the 50 ml sample flush cylinder with demineralized water for flushing the liquid sample from the Rheodyne sample injection valves.
  - While holding in a vertical position, attach the matching quick disconnects and fill the cylinder from the bottom to the top using demineralized water.
  - Connect to sample shelf inside sample panel.
- Replace Gas Bomb Septa.

5.13.4 Ensure all data is recorded and Enclosure 7.7 is complete.

5.13.5 Route this procedure along with the gamma spectra(s) to the OSC.

6. References

6.1 NUREG-0737, Section II.B.3

6.2 DPC System Radiation Protection Manual

6.3 Post Accident Liquid Sampling System Manual, Production Support Department, OM-311C-0331

6.4 ASTM Volume 11.01, D-1293-84 (1990)

6.5 DPC LM-O-P008

6.6 DPC LM-O-P004

6.7 ITS 5.5.4

7. Enclosures

7.1 Valve Arrangement Diagram (Control Panel)

7.2 Valve Arrangement Diagram (General - One Line)

7.3 PALSS Inlet Filter/Strainer Back Flush Procedure

7.4 Calculation of Hydrogen Concentration Using the Ideal Gas Law (Differential Pressure)

7.5 Unit 1 PALSS Power Supply

7.6 Operations Checklist for Unit 1 PALSS Operating Procedure Valve Lineups to Route Reactor Coolant to the PALSS/Waste to the RBES

7.7 PALSS Authorization for Operation and Data Transmittal Form

7.8 Operating the Analyzer/Controller

Enclosure 7.1

Valve Arrangement Diagram
(Control Panel)

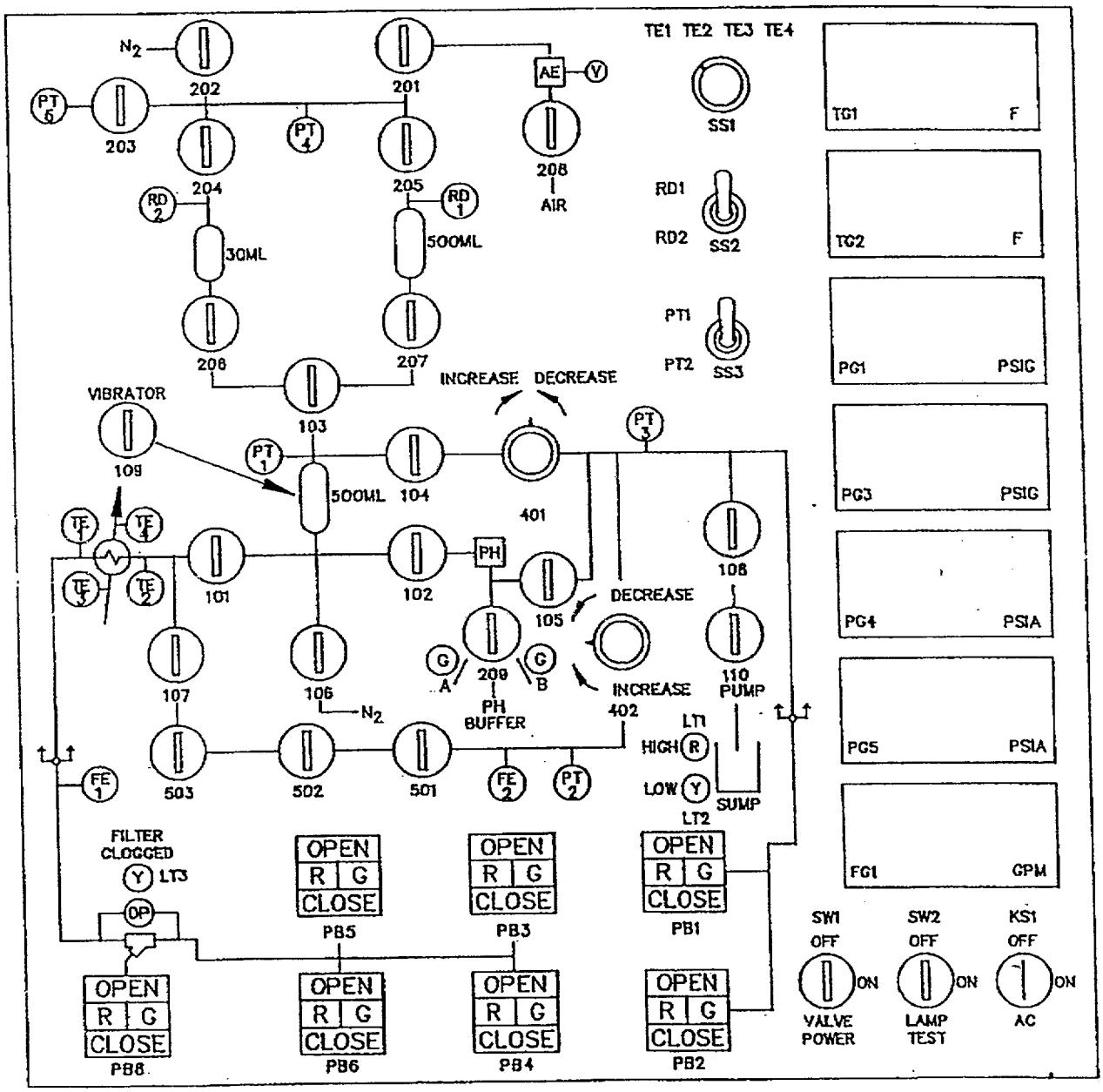

Enclosure 7.2

Valve Arrangement Diagram
(General - One Line)

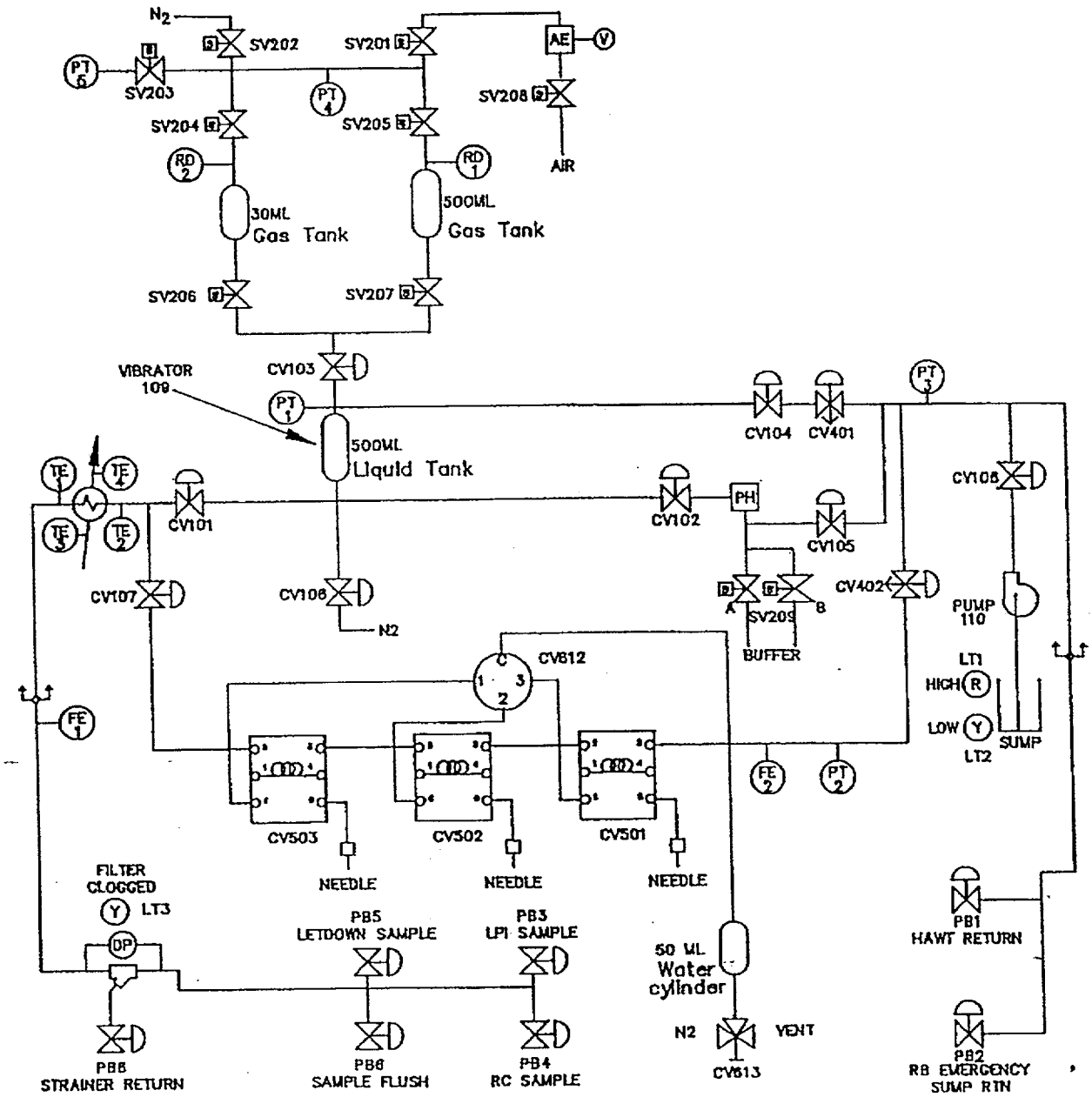

PALSS Inlet Filter/Strainer
Back Flush Procedure

1. Purpose

This enclosure gives instructions for back flushing the PALSS inlet filter/strainer.

2. Limits and Precautions

☐ The following RCS sample valves must be closed to prevent contamination of the demineralized water header with reactor coolant: (PALSS Control Panel)

- PB 5 (1LP-124, Isolation for HP Sample (Letdown))
- PB 3 (1LP-126, Isolation for LP Sample)
- PB4 (1RC-179, Post Accident Sample Block)

3. Procedure (PALSS Control Panel)

☐ 3.1 Ensure closed PB 5 (1LP-124, Isolation for HP Sample (Letdown)).

☐ 3.2 Ensure closed PB 3 (1LP-126, Isolation for LP Sample).

☐ 3.3 Ensure closed PB 4 (1RC-179, Post Accident Sample Block).

☐ 3.4 After ≥ 30 seconds, close 104.

☐ 3.5 Ensure SS 3 (selector switch) is in the "PT-1" position.

☐ 3.6 Monitor pressure on PG-1 for one minute.

☐ 3.6.1 **IF** the pressure on PG-1 > 60 psi **OR** is increasing with time, immediately contact Chemistry Staff and notify the RCS may be leaking by PB 5 (1LP-124, Isolation for HP Sample (Letdown)), PB 3 (1LP-126, Isolation for LP Sample) **OR** PB 4 (1RC-179, Post Accident Sample Block).

- Do **NOT** proceed without Staff approval.

☐ 3.7 Close 101

☐ 3.8 Open PB 8 (1LP-129, Sample Drain to the High Activity Waste Tank)

☐ 3.9 Open PB 6 (1DW-278, DW Flush Supply to Post Accident Sample)

☐ 3.10 Backflush ≥ 5 minutes, then close:

☐ 3.10.1 PB 6 (1DW-278, DW Flush Supply to Post Accident Sample)

☐ 3.10.2 PB 8 (1LP-129, Sample Drain to the High Activity Waste Tank)

☐ 3.11 **IF** the purpose is to resume sampling, open:

- PB 5 (1LP-124, Isolation for HP Sample (Letdown))

OR • PB 3 (1LP-126, Isolation for LP Sample)

OR • PB 4 (1RC-179, Post Accident Sample Block)

☐ 3.11.1 Open 104

☐ 3.11.2 Open 101

☐ 3.11.3 Return to procedural step allowing completion of the sampling process.

3.12 **IF** the clogged filter light is still "ON" and no flow is shown on FG 1, stop sampling.

3.13 Notify Chemistry Staff.

Staff Notified: _____

Enclosure 7.4

Calculation of Hydrogen Concentration Using the Ideal Gas Law (Differential Pressure)

1. Purpose

This enclosure provides guidance on calculations for hydrogen using Ideal Gas Laws.

2. Limits and Precautions

N/A

3. Procedure

3.1 Record the initial and final temperature and pressure readings from Steps 5.7.6.4 and 5.7.6.8.

Initial Temperature Reading _____ °F

Final Temperature Reading _____ °F

Initial Pressure Reading _____ PSIA

Final Pressure Reading _____ PSIA

3.2 Calculate the average gas temperature reading using the following equation:

$$T_{avg} = (T_{final} + T_{init})/2$$

where, T_{avg} = Average Gas Temperature, °C

T_{final} = Final Gas Temperature Reading, °C

T_{init} = Initial Gas Temperature Reading, °C

3.3 Calculate the differential gas pressure using the following equation:

$$P_{diff} = P_{final} - P_{init}$$

where, P_{diff} = Differential Gas Pressure, PSI

P_{final} = Final Gas Pressure Reading, PSIA

P_{init} = Initial Gas Pressure Reading, PSIA

Calculation of Hydrogen Concentration Using the Ideal Gas Law (Differential Pressure)

3.4 Calculate the hydrogen concentration of the trapped PALSS gas sample using the following equation:

$$H_2 = \frac{(3{,}719.83)(P_{diff})}{(T_{avg} + 273)} + \frac{(P_{final} - 0.69)}{0.769}$$

(H_2 in Gas Sample) (H_2 remaining in Liquid Sample)

where, H_2 = PALSS gas sample Hydrogen Concentration, cc/Kg

3.5 Record hydrogen concentration result from Step 3.4 above on Enclosure 7.7.

Enclosure 7.5

Unit 1 PALSS Power Supply

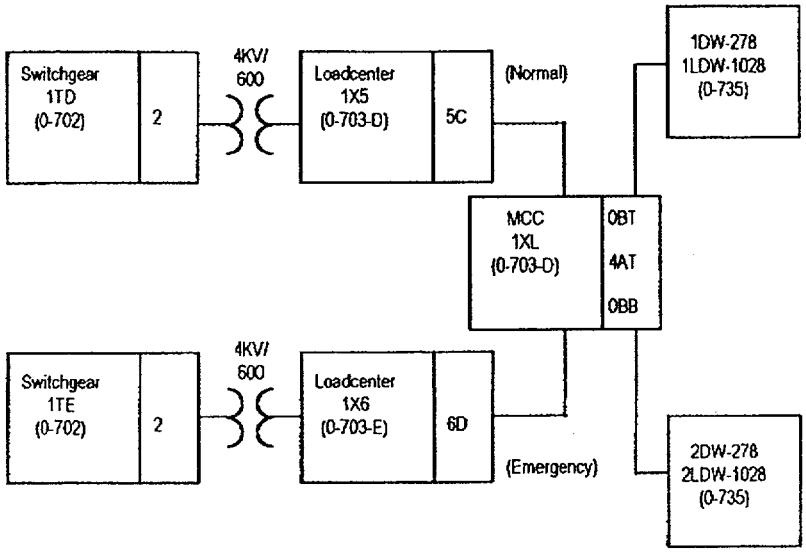

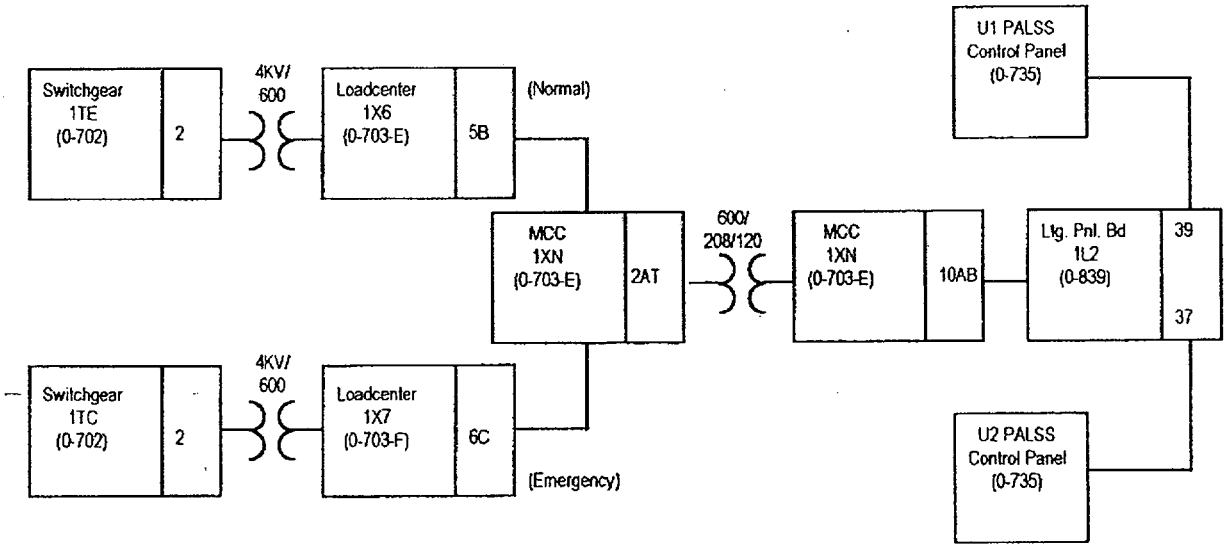

Enclosure 7.6

Operations Checklist for Unit 1 PALSS Operating Procedure Valve Lineups to Route Reactor Coolant to the PALSS/Waste to the RBES

1. Purpose

This enclosure gives the valve lineups needed for routing reactor coolant from the RCS "J" Leg through the PALSS to the RBES.

2. Limits and Precautions

☐ 2.1 Demineralized water header should be in service and have at least 60 psi pressure. RCW (sample cooling supply) should also be in service.

3. Procedure

3.1 Establish communications with Chemistry personnel assigned to the task.

Chemistry personnel assigned: _____

CAUTION: **IF** containment integrity is required or is to be considered, station personnel in constant communication with the Control Room in the vicinity of 1LP-65 ('1B' Emer Sump Line Drn Blk) to immediately close 1LP-65 **IF** ES actuation occurs.

_____ DV _____ 3.2 Open 1LP-65 ('1B' Emer Sump Line Drn Blk) (Unit 1 LPI Room) manual valve to be operated by reach rod from LPI Hatch Room 119 (on west wall).

_____ 3.3 Record that the valve is open in OP/0/A/1102/020 (Shift Turnover).

3.4 Establish flow to the PALSS panel via the RCS "J" Leg as follows:

3.4.1 Remove tag from breaker #14 on 1KVIB for:

- _____ 1RC-162 (RC Sample Vlv) (inside RB, operated from Control Room)
- _____ 1RC-164 (RC Sample Isol Vlv) (Unit 1LPI Room, operated from Control Room)

_____ 3.4.2 Close breaker #14.

_____ 3.4.3 Remove tag from breaker #4 on 1KVIA for 1RC-165, (RC Sample Isol Vlv (Solenoid Valve)). (Unit 1LPI Room, operated from Control Room)

_____ 3.4.4 Close breaker #4.

Operations Checklist for Unit 1 PALSS Operating Procedure Valve Lineups to Route Reactor Coolant to the PALSS/Waste to the RBES

CAUTION: **IF** containment integrity is required or is being considered, assign an Operator to close 1RC-162, 1RC-163, 1RC-164, and 1RC-165 in case of an ES Actuation.

_____ DV _____ 3.4.5 Open 1RC-162 (RC Sample Vlv). (inside RB, operated from Control Room)

_____ DV _____ 3.4.6 Open 1RC-163 (PALS (Pene #5B) Sample Line Blk). (inside RB, operated from Control Room)

_____ DV _____ 3.4.7 Open 1RC-164 (RC Sample Isol Vlv). (Unit 1 LPI Room, operated from Control Room)

_____ DV _____ 3.4.8 Open 1RC-165 (RC Sample Isol Vlv (Solenoid Valve)). (Unit 1 LPI Room, operated from Control Room)

_____ 3.4.9 Record that 1RC-164 (RC Sample Isol Vlv) and 1RC-165 (RC Sample Isolation Vlv (Solenoid Valve)) are open in OP/0/A/1102/020 (Shift Turnover).

3.5 Chemistry will notify Operations **WHEN** the RCS sample has been obtained

Operations notified: _____

3.6 Chemistry will ask Operations to close the following valves. (operated from Control Room)

_____ DV _____ 3.6.1 1RC-165 (RC Sample Isol Vlv (Solenoid Valve)). (Unit 1 LPI Room)

_____ DV _____ 3.6.2 1RC-164 (RC Sample Isol Vlv). (Unit 1LPI Room)

_____ 3.6.3 Record that containment isolation valves 1RC-164 (RC Sample Isol Vlv) and 1RC-165 (RC Sample Isol Vlv (Solenoid Valve)) are closed in OP/0/A/1102/020 (Shift Turnover).

_____ DV _____ 3.6.4 1RC-163 (PALS (Pene #5B) Sample Line Blk). (Reactor Building)

_____ DV _____ 3.6.5 1RC-162 (RC Sample Valve). (Reactor Building)

Operations Checklist for Unit 1 PALSS Operating Procedure Valve Lineups to Route Reactor Coolant to the PALSS/Waste to the RBES

3.7 **WHEN** RCS sampling is complete, ensure open the following breakers:

_____ 3.7.1 Tag open breaker #14 on 1KVIB for OP/1/A/1102/001 (Unit Startup).

NOTE: Both 1RC-162 (RC Sample Vlv) and 1RC-164 (RC Sample Isol Vlv) are powered from this breaker.

_____ 3.7.2 Tag open breaker #4 on 1KVIA for 1RC-165 (RC Sample Isolation Valve (Solenoid Valve)) for OP/1/A/1102/001 (Unit Startup).

_____ 3.8 Close 1LP-65 ('1B' Emerg Sump Line Drn Blk). (operated by reach rod from LPI Hatch Rm. 119, on west wall).

3.9 Record that 1LP-65 ('1B' Emerg Sump Line Drn Blk) is closed in OP/0/A/1102/020 (Shift Turnover).

3.10 Ensure completed enclosure is maintained by Chemistry.

Enclosure 7.7

PALSS Authorization for Operation and Data Transmittal Form

Date _____

_____ 1. **Verbal/written direction for sampling the Reactor Coolant via the PALSS has been received from the TSC/OSC.**

Sample Point: RCS "J-Leg" _____ Waste Route: RBES _____

LPI Pump Discharge_____ HAWT _____

HPI Letdown _____

Person Authorizing Sampling _____

_____ 2. **The specific post-accident analysis requested by TSC/OSC:**

____ Boron = _____ppm

____ Hydrogen = _____cc/kg

____ Chloride = _____ppm

____ pH = _____

____ Gas Gamma (attach)

____ Liquid Gamma (attach)

____ Other (specify) _____

3. **Have RP determine general area dose rate at the PALS valve panel and record below.**

Dose rate (general area) = _____ r/hr

_____ 4. **Determine by detailed planning meeting the exact course of action and data required.**

_____ 5. **Evaluate the use of portable shielding, remove handling equipment, video equipment, etc., to minimize the exposure to personnel while sampling.**

_____ 6. **Have RP determine the required respiratory equipment and protective clothing to prevent or minimize internal exposure in any Planned Emergency situation. Use high range and/or extremity dosimetry if required.**

_____ **7. Determine how long to flush the PALSS sample panel, based on general area dose readings.**

_____ **8. Request RP to designate a route from PALSS to the Lab.**

Sample route designated:_____

_____

9. Evaluate the use of portable shielding, remove handling equipment, video equipment, etc., to minimize the exposure to personnel in the Lab for the required analyses.

Front panel keys used for all operator tasks

Table 1-1 Key Functions

Key	Name	Use
	DISPLAY	**When process values are on display:** Use DISPLAY to cycle through available real-time displays. **When the main menu (Configuration, Calibration, Maintenance, I/O Setup) is on display:** Use DISPLAY to return to displaying process values.
	MENU	**When process values are on display:** Use MENU to access the menus. If the security feature is enabled, the display will prompt for entry of the password before access to the menus is permitted. (Enter the password using the procedure for editing a parameter numeric value as described on the next page.) **When any menu or configuration screen is on display:** Use MENU to go up a level in the display hierarchy. Frequently this means returning to the main menu.
	UP	**When a menu or configuration screen is on display:** Use UP to highlight a different item. **When changing a numerical value:** Use UP key to increment the value of the digit at the cursor.
	DOWN	**When a menu or configuration screen is on display:** Use DOWN to highlight a different item. **When changing a numerical value:** Use DOWN to decrement the value of the digit at the cursor.
	ENTER	**When a menu item is highlighted:** Use ENTER to select it. **When editing a parameter:** Use ENTER to save the new value.
F1	F1, F2, F3 [function keys]	**When a "soft key" label is displayed below the alarm stripe:** Use the function key directly below the label to perform the action.

(R04-01)

Duke Power Company
PROCEDURE PROCESS RECORD

(1) ID No. CP/2/A/2002/004 C
Revision No. 21

Continuous Use

INFORMATION ONLY

PREPARATION

(2) Station Oconee Nuclear Station

(3) Procedure Title Operating Procedure for the Post Accident Liquid Sampling (PALSS)

(4) Prepared By _____ Date 10-8-01

(5) Requires NSD 228 Applicability Determination?
- ☑ Yes (New procedure or revision with major changes)
- ☐ No (Revision with minor changes)
- ☐ No (To incorporate previously approved changes)

(6) Reviewed By _____ (QR) Date 1-7-02
Cross-Disciplinary Review By _____ (QR) NA ☒ Date _____
Reactivity Mgmt. Review By _____ (QR) NA ☒ Date _____
Mgmt. Involvement Review By _____ (Ops. Supt.) NA ☒ Date _____

(7) Additional Reviews
QA Review By _____ Date _____
Reviewed By _____ Date _____
Reviewed By _____ Date _____

(8) Temporary Approval *(if necessary)*
By _____ (OSM/QR) Date _____
By _____ (QR) Date _____

(9) Approved By Dale White for BLW Date 1-8-02

PERFORMANCE ***(Compare with control copy every 14 calendar days while work is being performed.)***

(10) Compared with Control Copy _____ Date _____
Compared with Control Copy _____ Date _____
Compared with Control Copy _____ Date _____

(11) Date(s) Performed _____
Work Order Number (WO#) _____

COMPLETION

(12) Procedure Completion Verification
- ☐ Yes ☐ NA Check lists and/or blanks initialed, signed, dated, or filled in NA, as appropriate?
- ☐ Yes ☐ NA Required enclosures attached?
- ☐ Yes ☐ NA Data sheets attached, completed, dated, and signed?
- ☐ Yes ☐ NA Charts, graphs, etc. attached, dated, identified, and marked?
- ☐ Yes ☐ NA Procedure requirements met?

Verified By _____ Date _____

(13) Procedure Completion Approved _____ Date _____

(14) Remarks *(Attach additional pages, if necessary)*

Operating Procedure for the Post Accident Liquid Sampling System (PALSS)

NOTE:
1. This **entire** procedure supports an AP or EOP action. The procedure will require AP/EOP validation per NSD 705.
2. Seven Control copies and one Information Only copy of this procedure shall be routed to the Emergency Preparedness Team within three working days after any approved changes.

1. Purpose

The post accident liquid sampling system (PALSS) provides the capability to obtain a primary coolant sample via the HPI Letdown, LPI Pump Discharge or the RCS "J" leg during a nuclear reactor accident condition(s) as described in the FSAR and in accordance with NUREG-0737.

2. Limits and Precautions

☐ 2.1 This procedure should be used to operate PALSS to sample the Reactor Coolant System under the following conditions:

2.1.1 Post Accident.

2.1.2 Inaccessibility of (routine) Primary Sampling Area **AND/OR** HPI Letdown Sampling not possible.

2.1.3 Request from the Chemistry Manager or his designee.

☐ 2.2 Under accident conditions, valve alignments shall **NOT** be made and samples shall **NOT** be taken without prior authorization from the Emergency Coordinator **OR** the TSC/OSC! (Containment isolation valves may be closed upon ES actuation, see Enclosure 7.6.)

☐ 2.3 Under accident conditions, do **NOT** attempt any phase of sampling **OR** analysis without Radiation Protection job coverage!

☐ 2.4 Consider portable shielding, remote handling equipment, video equipment, etc., where practical or available during sampling, sample preparation, and sample analysis.

☐ 2.5 Chemistry personnel shall operate only those valves operated by the Control Panel **OR** via the sample panel unless clearly specified otherwise in this procedure.

☐ 2.6 **IF** power is **NOT** available at the PALSS Control Panel, return to a low dose area and contact Chemistry management.

2.6.1 Refer to Enclosure 7.5 and troubleshoot as required to determine source of problem.

2.6.2 Notify the OSC/TSC.

2.6.3 **IF** necessary, request the OSC have Operations ensure the following breakers are closed (to ensure power availability).

- 1L2 Bkr. #39 Sampling/Control Panels Power Supply (located next to U2 sampling panel)
- MCC1XL Bkr. for 2DW-278 (DW Flush Supply to Post Accident Sample) (PALSS Control Panel)

CAUTION: Chemical hazards shall be known prior to use. For additional information and first aid requirements, refer to the MSDS sheet.

☐ 2.7 Personal protective requirements for chemicals used in this procedure are pH buffers 4.0, 7.0, and 10.0:

- lab coat
- gloves (rubber/vinyl)
- chemical splash goggles

☐ 2.8 **WHEN** flushing the desired sample to the waste tanks, request Operations add a second compressor on the GWD header because fresh fission gasses may cause a serious problem in the Aux. Building.

- **IF** possible, this increased vacuum should be maintained until sampling is complete.

☐ 2.9 All sample vials should be cleaned and rinsed to protect against chloride contamination.

- Do **NOT** place bare finger tips on the surface of the septum.

3. Apparatus

3.1 A minimum of 4 Lockable Glass (Gas) Syringes (1 to 2 mL size only)

3.2 Liquid Sample Carrier (Bucket, Etc.), Gas Syringe Carrier

3.3 Watch or Lab Timer

3.4 Plastic Bags

3.5 15 - 40cc Evacuated Sample Vial(s) for Liquid Sample

3.6 Nitrogen Supply Bottle with > 600 psi available. (with Two Stage Regulator; 0 to 200 psig on Delivery Stage) replace as required

4. Reagents

4.1 Buffer Solutions - Use purchased 4.00, 7.00 and/or 10.00 buffers or equivalent

5. Procedure

5.1 Prerequisites and Panel Preparation (preliminary)

5.1.1 Initiate Enclosure 7.7.

5.1.2 **IF** routing waste to the RBES or sampling from the RCS "J" Leg:

- Take Enclosure 7.6 to the responsible individual in Operations (designated by the OSC) for completion.
- Request Operations complete the appropriate step(s) of Enclosure 7.6.

5.1.3 Label glass vial(s) for collecting the liquid sample.

5.2 Panel Preparation (prior to sampling)

NOTE: **IF** any item on the control or sample panel is not clearly identified, refer to Enclosure 7.1 and 7.2.

☐ 5.2.1 Inform the U-1 Control Room that sampling of the RCS will be done via the PALSS panel.

- Identify the flowpath J-Leg, LPI **OR** Letdown.
- Recommend an extra waste gas compressor be placed into service.

Operator Notified: _____

☐ 5.2.2 At the Control Panel, ensure SW 1 (valve power switch), is in the "OFF" position.

- Ensure PALSS safety switch is "ON".

CAUTION: Make the mating of connector cable 1 to connector 1 on the Junction Box the LAST cable connection made. **IF** this is not done last, the exposed pins of the other cables may become energized and become an electrical hazard.

☐ 5.2.3 Position the Control Panel using RP as a guideline, in the lowest dose area possible.

☐ 5.2.4 **IF** necessary, route and connect the six required cables (CON 6 - CON 1) from the Control Panel to the Junction Box, starting with connector 6 and ending with connector 1.

☐ 5.2.4.1 Connect CON-6 cable at both ends.

☐ 5.2.4.2 Connect CON-5 cable at both ends.

☐ 5.2.4.3 Connect CON-4 cable at both ends.

☐ 5.2.4.4 Connect CON-3 cable at both ends.

☐ 5.2.4.5 Connect CON-2 cable at both ends.

☐ 5.2.4.6 Connect CON-1 cable at the PALSS control panel end.

☐ 5.2.4.7 Connect CON-1 cable to the junction box last.

☐ 5.2.5 Ensure off all control and solenoid valves (no lights).

5.2.6 Position the following valves: (outside of Sample Panel)

CAUTION: Nitrogen cylinder must be replaced if pressure is < 600 psig in order to prevent backflow of fission gas into the cylinder.

☐ Open valve(s) on Nitrogen Supply Bottle (> 600 psi tank pressure required & ~100 psi delivery pressure)

☐ **IF** necessary, replace cylinder.

☐ Open 2IA-2423 (IA to Post Accident Sample Panel).

NOTE: The following switches are found on the PALSS Control Panel.

☐ 5.2.7 Turn system power on by inserting Control Panel Key into (KS 1) Key Lock Switch and turning the key.

NOTE: The lights in the middle of each switch which controls a valve should be "OFF". The green lights should be "LIT" on the push-button switches, (PB 1) through (PB 8).

☐ 5.2.8 Ensure all lamps on the Control Panel are functioning by turning ON SW 2 (lamp test switch).

5.2.9 Make note of **OR** repair any not functioning properly. (The lamp test switch does not light).

☐ 5.2.9.1 Turn SW 2 (lamp test switch) to "OFF".

☐ 5.2.10 Turn SW 1 (valve power switch) to the "ON" Position.

NOTE: In an accident situation, waste will be routed to the RBES unless otherwise directed by supervision. The alternate route is the HAWT via PB1 (2LP-130).

_____ 5.2.11 **IF** routing waste to the RBES, open PB2 (2LP-65, 2B Emerg Sump Line Drn Blk).

_____ 5.2.12 **IF** routing waste to the HAWT, open PB1 (2LP-130, Sample Return to High Activity Waste Tank).

5.3 Panel Preparation (pH Meter Standardization) (PALSS Control Panel)

5.3.1 Purge the pH housing with Nitrogen as follows:

NOTE: All other control valves must be closed.

☐ 5.3.1.1 Open 204

☐ 5.3.1.2 Open 206

☐ 5.3.1.3 Open 103

☐ 5.3.1.4 Open 102

☐ 5.3.1.5 Open 105

☐ 5.3.1.6 Open 202

☐ 5.3.1.7 Wait at least 2 minutes, close 105.

5.3.2 Pressurize Buffer Tank A as follows:

NOTE: SV 209 controls both buffer tanks (A and B).

☐ 5.3.2.1 Place 209 in the 'A' position.

☐ 5.3.2.2 Wait at least 30 seconds, then place 209 in the "OFF" position.

☐ 5.3.2.3 Close 202

5.3.3 Evacuate pH housing as follows:

☐ 5.3.3.1 Open 208

☐ 5.3.3.2 Open 201

☐ 5.3.3.3 **WHEN** the pressure on PG 4 stabilizes (normally < 2.0 PSIA),

☐ A. Close 201

☐ B. Record the pH Housing pressure from PG 4 **OR** PG 5.

pH Housing Pressure for A Buffer = _____ PSIA

☐ 5.3.3.4 Close 102

☐ 5.3.3.5 Close 103

☐ 5.3.3.6 Close 206

☐ 5.3.3.7 Close 204

☐ 5.3.3.8 Close 208

5.3.4 Transfer A Buffer into the pH housing as follows:

☐ 5.3.4.1 Place 209 in the 'A' position.

☐ 5.3.4.2 Wait at least 1 minute, then place 209 in the "OFF" position.

5.3.5 Standardize the pH meter as follows:

NOTE:
1. The following keys are located on the pH meter in the face of the PALSS control panel.
2. Refer to Enclosure 7.8 for pH meter key descriptions.

5.3.5.1 Use the "menu" key to move to the main menu. The display will show: ("Configuration, Calibration, Maintenance, I/O Setup").

5.3.5.2 Using the "arrow up or down" keys, move to and highlight "Calibration".

5.3.5.3 Press "enter".

5.3.5.4 Using the "arrow up or down" keys, move to and highlight "Calibration / Buffer Calibration pH", then press Enter.

5.3.5.5 Press the "Hold" key.

5.3.5.6 Press the "next" key to move to the next screen.

NOTE:
- A flashing value indicates the probe may be broken.
- A value that **CANNOT** be adjusted to within ± .5 pH offset will make the unit return to the calibration screen, indicating that the pH electrode may need to be replaced.

5.3.5.7 The display will show the pH of the 'A' buffer solution.

5.3.5.8 Wait for a stable reading. Press the up or down arrow once to activate the side to side arrows. Then using the "function keys, side to side" select the desired digit space and change the value on the display using the "arrow up and down" keys to match the actual 'A' buffer pH.

5.3.5.9 **WHEN** the unit display indicates the buffer pH, press the "ENTER" key.

5.3.5.10 Record the pH meter value set for the 'A' buffer pH.

'A' Buffer Solution pH _____

5.3.5.11 **WHEN** the unit successfully meets the preset specifications and the entered buffer value is displayed, press "next" until the screen with the following is visible:

SLOPE

Note: Buffer must be > 2 pH units away from the STD buffer.

NOTE:	The unit should still be in the "hold" mode.

5.3.5.12 Press "next". The following screen should be visible:

SLOPE

Place electrode in Buffer Attention.
Wait for Stable Reading!

5.3.6 Flush the pH housing with DW as follows:

☐ 5.3.6.1 Open 101

☐ 5.3.6.2 Open 102

☐ 5.3.6.3 Open 105

☐ 5.3.6.4 Open PB-6 (2DW-278, DW Flush Supply to Post Accident Sample).

☐ 5.3.6.5 Wait at least 5 minutes, close 101.

☐ 5.3.6.6 Close PB-6 (2DW-278, DW Flush Supply to Post Accident Sample).

5.3.7 Purge the demineralized water out of the pH housing with nitrogen as follows:

- ☐ 5.3.7.1 Open 202
- ☐ 5.3.7.2 Open 204
- ☐ 5.3.7.3 Open 206
- ☐ 5.3.7.4 Open 103
- ☐ 5.3.7.5 Place 209 in the 'A' position.
- ☐ 5.3.7.6 Place 209 in the "OFF" position.
- ☐ 5.3.7.7 After at least 2 minutes, close 105.

5.3.8 Pressurize Buffer Tank B as follows:

- ☐ 5.3.8.1 Place 209 in the 'B' position.
- ☐ 5.3.8.2 Wait at least 30 seconds, place 209 in the "OFF" position.
- ☐ 5.3.8.3 Close 202

5.3.9 Evacuate pH housing as follows:

- ☐ 5.3.9.1 Open 208
- ☐ 5.3.9.2 Open 201
- ☐ 5.3.9.3 **WHEN** the pressure on PG 4 stabilizes (normally < 2.0 PSIA), close 201.
- ☐ 5.3.9.4 Record pH Housing pressure from PG 4.

  pH Housing Pressure for B Buffer = _____ PSIA
- ☐ 5.3.9.5 Close 102
- ☐ 5.3.9.6 Close 103
- ☐ 5.3.9.7 Close 206
- ☐ 5.3.9.8 Close 204
- ☐ 5.3.9.9 Close 208

5.3.10 Transfer B Buffer into the pH housing as follows:

☐ 5.3.10.1 Place 209 in the 'B' position.

☐ 5.3.10.2 Wait at least 1 minute, place 209 in the "OFF" position.

5.3.11 Calibrate the pH meter as follows: (pH meter on the face of the PALSS Control Panel)

NOTE:
1. Refer to Enclosure 7.8 for pH meter key description.
2. The unit should still be in the "HOLD" mode. This key causes the pH meter to maintain a constant output and alarm condition. This allows the electrode to be removed (optional) for calibration in a buffer without process upset. The temperature compensation feature is also disabled in the "HOLD" mode (this allows calibration of the meter to the particular temperature of the buffer used).

5.3.11.1 Press "next". The display will show the pH of the 'B' buffer as measured by the electrode.

5.3.11.2 Wait for a stable reading. Press the up or down arrow once to activate the side to side arrows. Then select the desired digit space using the "function keys side to side".

5.3.11.3 Adjust the value on the display using the "arrow up and down" keys, until the display matches the actual pH of the buffer solution.

5.3.11.4 Press "enter". This will set the instrument slope.

5.3.11.5 Record the pH meter value set for the 'B' buffer pH.

'B' Buffer Solution pH _____

5.3.11.6 **IF** the slope adjustment was successful, the Completed screen will be displayed:

SLOPE
Slope Completed
Slope Buffer Value Saved

5.3.11.7 Using the "hold" key, take the unit out of the hold mode.

NOTE: **IF** the calibration was not successful, the menu will return to the original Calibration Menu by itself and display an error code.

5.3.11.8 Use the "next" key to rotate back to the original Calibration menu screen.

5.3.11.9 Press the "Display" key. The pH meter is now in the sample measurement mode.

5.3.12 Flush the pH housing with DW as follows:

- ☐ 5.3.12.1 Open 101
- ☐ 5.3.12.2 Open 102
- ☐ 5.3.12.3 Open 105
- ☐ 5.3.12.4 Open PB 6 (2DW-278, DW Flush Supply to Post Accident Sample)
- ☐ 5.3.12.5 Wait ≥ 3 minutes, close 101.
- ☐ 5.3.12.6 Close PB 6 (2DW-278, DW Flush Supply to Post Accident Sample)

5.3.13 Purge the demineralized water out of the pH housing with nitrogen as follows:

- ☐ 5.3.13.1 Open 202
- ☐ 5.3.13.2 Open 204
- ☐ 5.3.13.3 Open 206
- ☐ 5.3.13.4 Open 103
- ☐ 5.3.13.5 Wait ≥ 2 minutes **OR** until pressure on PG 3 drops rapidly (below 50 psi), then close 105.
- ☐ 5.3.13.6 Place the 209 in the 'B' position.
- ☐ 5.3.13.7 Place the 209 in the "OFF" position.
- ☐ 5.3.13.8 Close 202
- ☐ 5.3.13.9 Close 204

☐ 5.3.13.10 Close 206

☐ 5.3.13.11 Close 103

☐ 5.3.13.12 Close 102

5.4 Panel Preparation (pH Housing and Gas Tank(s) Evacuation) (PALSS Control Panel)

5.4.1 Evacuate pH housing and gas tanks as follows:

☐ 5.4.1.1 Open 208

☐ 5.4.1.2 Open 201

☐ 5.4.1.3 Open 203

☐ 5.4.1.4 Open 204

☐ 5.4.1.5 Open 205

☐ 5.4.1.6 Open 206

☐ 5.4.1.7 Open 207

☐ 5.4.1.8 Open 103

☐ 5.4.1.9 Open 102

☐ 5.4.1.10 Monitor the pressure in the pH housing and gas tanks on PG 5 **OR** PG 4.

- **WHEN** the pressure stabilizes (normally < 2.0 PSIA), close 201.

☐ 5.4.1.11 Close 208

5.4.2 pH Housing Pressure

☐ 5.4.2.1 Record pH Housing pressure from PG 5 (alternate PG 4).

pH Housing Pressure _____ PSIA

☐ 5.4.2.2 Close 102

☐ 5.4.2.3 Close 103

☐ 5.4.2.4 Close 206

☐ 5.4.2.5 Close 207

5.4.3 30 mL and 500 mL Gas Tanks Pressure

☐ 5.4.3.1 Record gas tank pressures from PG 5 (alternate PG 4).

Gas tanks (30mL and 500mL) pressure _____ PSIA

☐ 5.4.3.2 Close 205

☐ 5.4.3.3 Close 204

☐ 5.4.3.4 Close 203

5.5 Panel Operation (Reactor Coolant Sample Flush/Acquisition) (PALSS Control Panel)

NOTE: The sample will be taken via the LPI pump discharge, HPI Letdown, or the RCS "J-Leg" sample point.

CAUTION:
1. PB 6 (2DW-278) must be closed to prevent flow of RCS into the demineralized water header.
2. CV-102 and CV-105 must be closed to prevent overpressurization and failure of the pH housing.

5.5.1 Ensure closed the following valves:

☐ 5.5.1.1 Close PB-6 (2DW-278, DW Flush Supply to Post Accident Sample).

☐ 5.5.1.2 Close 102

☐ 5.5.1.3 Close 105

☐ 5.5.2 Ensure SS 3 (selector switch) is in the "PT 1" position.

_____ 5.5.3 **IF** sampling the RCS "J-Leg", then open PB 4 (2RC-179, Post Accident Sample Block).

_____ 5.5.4 **IF** sampling the LPI pump Discharge, then open PB 3 (2LP-126, Isolation for LP Sample).

_____ 5.5.5 **IF** sampling the HPI Letdown, then open PB 5 (2LP-124, Isolation for HP Sample Stop).

☐ 5.5.6 Open 101

☐ 5.5.7 Open 104

CAUTION: Monitor PG 3 to ensure that the outlet pressure does **NOT** exceed 600 PSIG. Adjust slowly.

☐ 5.5.8 Open 401 to establish the maximum flow without exceeding 600 PSIG on PG 3.

☐ 5.5.9 Record the flowrate from FG1 _____ gpm.

☐ 5.5.10 Record the pressure from PG 3 _____ psig.

5.5.11 **IF** LT 3 (clogged filter light switch) comes on and remains on, but flow on FG-1 is > 1.5 gpm, continue with procedure.

- **IF** flow is < 1.5 gpm, contact Chemistry Staff for further instructions.
- **IF** directed by management, proceed to Enclosure 7.3.

☐ 5.5.12 Select the desired thermocouple to monitor the inlet **OR** outlet of the sample **OR** the cooling water using SS 1:

TE 1 - Measures sample inlet to heat exchanges.

TE 2 - Measures sample return from heat exchanger.

TE 3 - Measures cooling water inlet to heat exchanger.

TE 4 - Measures cooling water return from heat exchanger.

☐ 5.5.12.1 Switch SS 1 to "TE 1"

☐ 5.5.12.2 Record sample inlet temperature on TG 1.

INLET TEMPERATURE _____°F

☐ 5.5.12.3 Switch SS 1 to "TE 2".

☐ 5.5.12.4 Record sample outlet temperature on TG 2.

OUTLET TEMPERATURE _____°

5.5.13 After > 15 gallons have flowed through the system (calculate time based on FG-1 reading):

☐ 5.5.13.1 Slowly throttle 401 until fully closed.

☐ 5.5.13.2 Immediately close 104

☐ 5.5.13.3 Immediately close 101

☐ 5.5.13.4 Record 500 mL liquid tank pressure from PG 1.

Pressure = _____ PSIG

☐ 5.5.14 Move selector switch SS 3 to the "PT 2" position to measure discharge pressure of the injection valves.

NOTE: There are two continuous flow paths through the sample valve(s). When the valve(s) is opened, the sample loop is moved to the sample flow path. When the valve(s) is closed, the sample loop is moved to the sample injection (collection) flow path.

5.5.15 Ensure open the desired sample injection valve(s) of the 0.1 mL, 1 mL and/or 5 mL loop, respectively (normally the 5 mL and 1 mL loop are used):

☐ 503 (0.1 mL Loop)

☐ 502 (1 mL Loop)

☐ 501 (5 mL Loop)

☐ 5.5.16 Open 107

☐ 5.5.17 Slowly open 402 keeping flowrate on FG 2 < 300 mL/min.

NOTE: Greater than 40 PSIG sample pressure must be supplied to the injection valves.

5.5.18 After ≥ 5 minutes, close the sample injection valve(s) opened in Step 5.5.15.

☐ 503 (0.1 mL Loop)

☐ 502 (1 mL Loop)

☐ 501 (5 mL Loop)

5.5.19 Record sample time: _____

_____ 5.5.20 Close the sample valve selected in Step 5.5.3 or 5.5.4 or 5.5.5

- PB 4 (2RC-179, Post Accident Sample Block)
- PB 3 (2LP-126, Isolation for LP Sample)
- PB 5 (2LP-124, Isolation for HP Sample Stop)

☐ 5.5.21 After 1 minute, close 402.

CAUTION: IF the pressure on PG-1 is > 100 psi or is increasing with time, contact Chemistry Staff and notify that RCS is leaking by sample valve.

☐ 5.5.22 After 1 minute, record the pressure on PG-1: _____psi

☐ 5.5.23 Close 107

5.6 Depressurization (PALSS Control Panel)

☐ 5.6.1 Ensure SS 3 (selector switch) is in the "PT 1" position.

☐ 5.6.2 Ensure closed 206

☐ 5.6.3 Ensure closed 207

☐ 5.6.4 Open 103

☐ 5.6.5 Wait ≥ 2 minutes.

NOTE: Pressure on PG 1 should be < 50 PSIG.

☐ 5.6.6 Record the pressure from PG 1 _____ PSIG.

5.7 Gas Collection (PALSS Control Panel)

5.7.1 Verify pressure in the 30 mL and 500 mL gas tank is ≤ 2.0 PSIA.

For 500 mL Gas Tank:

☐ 5.7.1.1 Open 205

☐ 5.7.1.2 Open 203

☐ 5.7.1.3 Record PG 5 (alternate gauge PG 4).

500 mL Gas Tank Pressure _____

☐ 5.7.1.4 Close 205

☐ 5.7.1.5 Close 203

For 30 mL Gas Tank:

☐ 5.7.1.6 Open 204

☐ 5.7.1.7 Open 203

☐ 5.7.1.8 Record PG 5 (alternate gauge PG 4).

30 mL Gas Tank Pressure _____

☐ 5.7.1.9 Close 204

☐ 5.7.1.10 Close 203

5.7.2 **IF** the pressure in the 30 mL and 500 mL Gas Tank is ≤ 2.0 PSIA, proceed to Step 5.7.5 **IF** the Nitrogen stripping method is to be used for gas collection and analysis.

5.7.3 **IF** the alternate method (Total Gas Method) is to be used, proceed to Step 5.7.6.

☐ 5.7.4 **IF** the pressure in the 30 mL **OR** 500 mL Gas Tank is > 2.0 PSIA, evacuation of the tanks must be repeated as follows:

☐ 5.7.4.1 Close 103

☐ 5.7.4.2 Open 204

☐ 5.7.4.3 Open 205

☐ 5.7.4.4 Open 201

☐ 5.7.4.5 Open 208

☐ 5.7.4.6 Open 203

5.7.4.7 **WHEN** the reading from PG 5 (alternate gauge PG 4) is ≤ 2.0 PSIA, close

☐ A. 204

☐ B. 205

☐ C. 201

☐ D. 208

☐ E. 203

☐ 5.7.4.8 Open 103

5.7.4.9 **IF** the Nitrogen stripping method is to be used for gas collection and analysis, continue with Step 5.7.5.

5.7.4.10 **IF** the alternate method (Total Gas Method) is to be used, proceed to Step 5.7.6.

NOTE:	Nitrogen Stripping Method is the typical method.

5.7.5 Nitrogen Stripping Method (Gas Analysis)

☐ 5.7.5.1 Ensure closed 205

☐ 5.7.5.2 Open 207

☐ 5.7.5.3 Open 106

NOTE:	The pressure on PG-1 should be monitored for an increase of approximately 15 psi. Because PT-1 is a high range pressure transmitter the indicated reading on PG-1 will vary from calibration to calibration and may indicate anywhere from -15 to 15 psi initially.

☐ 5.7.5.4 For a 10 minute interval, periodically turn on 109 to vibrate 500 mL liquid tank, monitor the pressure on PG 1 (switch SS 3 to "PT 1").

☐ 5.7.5.5 Close 106

☐ 5.7.5.6 Open 205

☐ 5.7.5.7 Open 204

5.7.5.8 After ≥ 5 minutes when PG 4 (alternate PG 1) stabilizes, close:

☐ A. 204

☐ B. 205

☐ C. 207

☐ D. 103

5.7.5.9 Proceed to Section 5.8.

NOTE: Calculated method should be used only as an alternate.

5.7.6 Total Gas Method (Calculated)

☐ 5.7.6.1 Monitor PG 4.

☐ 5.7.6.2 **WHEN** the pressure shown on PG 4 is < 30 PSIA, the low range pressure transmitter, PT 5, can be used to obtain a more accurate pressure measurement.

- PT 5 can be used by opening 203.

☐ 5.7.6.3 Ensure SS 2 switch is in the "RD 2" position.

☐ 5.7.6.4 Record the initial temperature reading from TG 2 and pressure reading from PG 5.

TG 2 Init. Temp. Reading _____°F

PG 5 Init. Press. Reading _____ PSIA

☐ 5.7.6.5 Open 206

☐ 5.7.6.6 Open 204

☐ 5.7.6.7 Turn on the vibrator using 109 and monitor PG 5.

☐ 5.7.6.8 **WHEN** the pressure of the 30 mL gas tank stabilizes, record the final pressure and temperature.

TG 2 Final Temp. Reading _____°F

PG 5 Final Press. Reading _____ PSIA

☐ 5.7.6.9 Close 203

☐ 5.7.6.10 Close 204

☐ 5.7.6.11 Close 206

☐ 5.7.6.12 Ensure 109 is off.

☐ 5.7.6.13 Close 103

☐ 5.7.6.14 Calculate the total amount of H_2 in the sample using Enclosure 7.4.

☐ 5.7.6.15 Report results on Enclosure 7.7.

5.8 Sample pH Measurement (PALSS Control Panel)

☐ 5.8.1 Ensure closed 206

☐ 5.8.2 Ensure closed 204

☐ 5.8.3 Ensure SS 3 switch is set on PT 1.

5.8.4 Pressurize liquid tank to at least 60 PSIG as monitored on PG 1 (alternate PG 4), as follows:

☐ 5.8.4.1 Open 202

☐ 5.8.4.2 Open 205

☐ 5.8.4.3 Open 207

☐ 5.8.4.4 Open 103

☐ 5.8.4.5 After 30 seconds, close 103.

☐ 5.8.4.6 Close 207

☐ 5.8.4.7 Close 205

☐ 5.8.4.8 Close 202

☐ 5.8.5 Open 102

5.8.6 Record pH on Enclosure 7.7.

☐ 5.8.7 Close 102

5.8.8 Notify OSC that RCS sampling via the PALSS is completed and that sample retrieval will begin following system flush.

OSC Person Notified: _____

5.9 System Flush (PALSS Control Panel)

NOTE: Directions regarding sample panel flushing will be determined by management.

5.9.1 Ensure 204 and 206 remain closed and the sample injection valve(s) selected (501, 502 and/or 503) is turned off.

5.9.2 **IF** either LT 1 **OR** LT 2 indicator is illuminated:

☐ 5.9.2.1 Open 108

☐ 5.9.2.2 Turn on 110 (sump pump).

☐ 5.9.2.3 **WHEN** both LT1 and LT2 are out, close 108.

☐ 5.9.2.4 Turn off 110 (sump pump).

5.9.3 **IF** given the direction to flush the panel, flush the 500 mL liquid tank, pH housing, and sample injection valves as follows:

500 mL Liquid Tank

☐ 5.9.3.1 Open 101

☐ 5.9.3.2 Open 104

☐ 5.9.3.3 Open 401

☐ 5.9.3.4 Open PB 6 (2DW-278, DW Flush Supply to Post Accident Sample)

pH Housing

☐ 5.9.3.5 Open 102

☐ 5.9.3.6 Open 105

Sample Injection Valves

☐ 5.9.3.7 Open 107

☐ 5.9.3.8 Open 402

☐ 5.9.3.9 Flush the sample panel until the general area dose rate on the exterior of the panel is ≤ 2 mR/hr **OR** a satisfactory level is achieved per RP.

☐ 5.9.3.10 Close 402

☐ 5.9.3.11 Close 107

☐ 5.9.3.12 Close 105

☐ 5.9.3.13 Close 102

☐ 5.9.3.14 Close 101

☐ 5.9.3.15 Close 104

☐ 5.9.3.16 Close 401

☐ 5.9.3.17 Close PB 6 (2DW-278, DW Flush Supply to Post Accident Sample)

5.10 Liquid & Gas Sample Retrieval (PALSS Control Panel)

Liquid Sample Retrieval

☐ 5.10.1 Ensure open the waste route selected in Step 5.2.11 or 5.2.12:

- PB 1 (2LP-130, Sample Return to High Activity Waste Tank)

OR • PB 2 (2LP-121, 2B Emerg Sump Line Drn Blk).

☐ 5.10.2 Ensure closed all other PB valves (motor operated).

☐ 5.10.3 **IF** LT 1 **OR** LT 2 is illuminated, perform Step 5.9.1.

☐ 5.10.4 Select the flow path for sample collection by turning CV 612 to the desired injection valve (0.1 mL, 1 mL, or 5 mL loop).

Sample Loop(s) Selected _____

☐ 5.10.5 Slowly turn CV 613 to the "N_2" position.

☐ 5.10.6 After collecting approximately 15 mLs of liquid sample, turn CV 613 to the "VENT" position.

☐ 5.10.7 Wait ≥ 10 seconds for sample line depressurization.

☐ 5.10.8 Turn CV 612 to the "OFF" position.

☐ 5.10.9 As necessary for additional sample(s), repeat Steps 5.10.3 through 5.10.7.

Gas Sample Retrieval

☐ 5.10.10 **WHEN** possible, use the gas-tight syringe(s) to retrieve the gas sample(s) from the 30 mL gas tank keeping syringe vertical (needle down).

☐ 5.10.11 **IF** possible, place syringes in the gas locked position and store vertically (needle down).

5.11 30 mL Gas Tank and 500 mL Gas Tank Purge (PALSS Control Panel)

☐ 5.11.1 Verify Nitrogen supply still has ≥ 100 psig delivery pressure.

5.11.2 Allow all of the following valves to stay open ≥ 2 minutes except alternate the valve pairs 204/206 and 205/207 open and close within the 2 minute period:

☐ 5.11.2.1 Open 202

☐ 5.11.2.2 Open 204

☐ 5.11.2.3 Open 205

☐ 5.11.2.4 Open 206

☐ 5.11.2.5 Open 207

☐ 5.11.2.6 Open 103

☐ 5.11.2.7 Open 104

☐ 5.11.2.8 Open 401

☐ 5.11.2.9 After flushing for several seconds, close the following:

A. 204

B. 206

☐ 5.11.2.10 After additional flush for several seconds, open the following:

A. 204

B. 206

☐ 5.11.2.11 Close 205

☐ 5.11.2.12 Close 207

☐ 5.11.2.13 After several seconds, open the following:

A. 205

B. 207

☐ 5.11.2.14 **IF** the valves need further cycling (it has not been ≥ 2 minutes) return to Step 5.11.2.10.

☐ 5.11.2.15 **IF** the time is ≥ 2 minutes, proceed to Step 5.11.3.

☐ 5.11.3 Close 202

☐ 5.11.4 Close 401

☐ 5.11.5 Close 104

☐ 5.11.6 Close 103

☐ 5.11.7 Open 201

☐ 5.11.8 Open 208

5.11.9 After ≥ 10 seconds, close the following:

☐ 5.11.9.1 206

☐ 5.11.9.2 207

☐ 5.11.9.3 204

☐ 5.11.9.4 205

☐ 5.11.9.5 201

☐ 5.11.9.6 208

☐ 5.11.10 Repeat Step 5.11.2 through 5.11.9 until dose rates of 30 mL and 500 mL tank are ≤ 10 mR/hr (at contact) **OR** a satisfactory level is achieved per RP.

5.12 System Shutdown

5.12.1 Ensure closed the following motor operated valves: (PALSS Control Panel)

☐ PB 1 (2LP-130, Sample Return to High Activity Waste Tank)

☐ PB 2 (2LP-121, 2B Emerg Sump Line Drn Blk)

☐ PB 3 (2LP-126, Isolation for LP Sample)

☐ PB 4 (2RC-179, Post Accident Sample Block)

☐ PB 5 (2LP-124, Isolation for HP Sample Stop)

☐ PB 6 (2DW-278, DW Flush Supply to Post Accident Sample)

☐ PB 8 (2LP-129, Sample Drain to the High Activity Waste Tank)

5.12.2 Ensure closed the following solenoid valves: (PALSS Control Panel)

☐ 201

☐ 202

☐ 203

☐ 204

☐ 205

☐ 206

☐ 207

☐ 208

☐ 209

5.12.3 Ensure closed the following control valves: (PALSS Control Panel)

- ☐ 101
- ☐ 102
- ☐ 103
- ☐ 104
- ☐ 105
- ☐ 106
- ☐ 107
- ☐ 108

_____ 5.12.4 Return the valve power switch, SW 1, to the "OFF" position.

_____ 5.12.5 Return the key switch, KS 1, to the "OFF" position.

_____ 5.12.6 Close 2IA-2423 (IA to Post Accident Sample Panel) (Outside the PALSS Sample Panel)

_____ 5.12.7 Ensure N_2 cylinder discharge pressure > 600 psi.

- **IF** necessary, replace cylinder.

_____ 5.12.8 Close N_2 Supply Bottle valves (Outside the PALSS Sample Panel)

NOTE: The following cable connections are located between the PALSS Control Panel and the cable junction box.

CAUTION: Make the disconnection of connector cable 1 from the Junction Box the FIRST cable disconnection. **IF** this is not done first, the exposed pins of the other cables may become energized and become an electrical hazard.

☐ 5.12.9 **IF** directed by Chemistry Staff, disconnect the following cables in order:

Staff notified _____ Check below as directed by Staff.

☐ Leave the power cables connected.

☐ Disconnect the power cables connected.

☐ 5.12.9.1 CON-1 from the junction box (this is the first cable disconnect made), then from the PALSS Control Panel.

☐ 5.12.9.2 CON-2 cable at both ends.

☐ 5.12.9.3 CON-3 cable at both ends.

☐ 5.12.9.4 CON-4 cable at both ends.

☐ 5.12.9.5 CON-5 cable at both ends.

☐ 5.12.9.6 CON-6 cable at both ends.

☐ 5.12.10 Store the control panel in the AB 1st floor hallway/corridor within ten (10) feet from the Unit 1 electrical junction box.

☐ 5.12.11 Ensure the control panel wheels are locked to prevent panel movement.

☐ 5.12.12 Ensure CV 609 is in the "AIR" position.

☐ 5.12.13 Ensure CV 610 is in the "NITROGEN" position.

☐ 5.12.14 Inform the OSC that flushing of the PALSS Panel has been completed.

OSC Person Notified: _____

5.13 Sample Analysis

NOTE: Steps 5.13.1 - 5.13.3 can be performed in any order. Substeps must be performed in the order written.

5.13.1 Gas (Nitrogen Stripping Method)

5.13.1.1 Analyze up to four syringes of stripped gas using LM-O-P008 (The Determination of Hydrogen in Gas Samples using the Carle Gas Chromatograph and the Spectra Physics Integrator).

5.13.1.2 Use the following formula to calculate results:

$$\% H_2 \frac{615.72 \text{ cc}}{0.50 \text{ Kg}} \times \frac{1}{100} = \text{cc/Kg } H_2$$

Where: % H_2 is determined from LM-O-P008

615.72 cc = 30 mL gas bomb + 500 mL gas bomb + tubing volume (volume occupied by sample gas).

0.50 Kg = collected sample size

$\frac{1}{100}$ = conversion of percent to decimal

5.13.1.3 Record results in cc/kg H_2 on Enclosure 7.7.

5.13.1.4 **IF** needed, reserve other stripped gas syringes for use as backups **OR** to perform a gas sample gamma spectra.

5.13.2 Liquid

5.13.2.1 Submit sample to count room for gamma spectra analysis. The sample may be counted in the rheodyne sample vial using the loop volume (preferred) or in a 50 mL bottle. **IF** a 50 mL bottle is used, refer to the following table for preparation guidelines:

PALSS Loop Size	Gamma Spectra Volume Ratio	Dilute sample from PALSS with demin. To: (mLs)	mLs of diluted sample to dilute to 50 mLs for gamma spectra analysis
5.24	5/45	50	(50/5.24)*5 or ~ 48
5.24	1/49	100	(100/5.24)*1 or ~19
1.04	1/49	50	(50/1.04)*1 or ~48
1.04	.5/49.5	100	(100/1.04)*0.5 or ~48
0.10058	.1/49.9	50	(50/0.10058)*0.1 or ~50

5.13.2.2 Record results in mCi/mL on Enclosure 7.7 and attach GeLi Spectra.

5.13.2.3 Analyze PALSS sample for boron.

- To obtain a boron concentration that will correlate directly with the normal RCS, the dilution factor must be multiplied by the analyzed sample concentration (obtained from the Boron Titration).

$$\text{ppm B} = \text{measured ppm B} \times \frac{\text{Total dilution volume (sample loop + dilution water), mLs}}{\text{sample loop volume, mLs}}$$

5.13.2.4 Record results of boron sample analysis on Enclosure 7.7.

5.13.2.5 Perform a chloride analysis of the sample.

- To obtain a Cl concentration that will correlate directly with the normal RCS, the dilution factor must be multiplied by the analyzed sample concentration.

$$\text{ppb Cl} = \text{measured ppb Cl} \times \frac{\text{Total dilution volume (sample loop + dilution water), mLs}}{\text{sample loop volume, mLs}}$$

NOTE: **IF** the Cl results are below the Limit of detection (LOD) for the Cl analysis, multiply the LOQ by the dilution factor for reporting purposes (record as "< LOQ * dilution factor" instead of "T0").

5.13.2.6 Record results on Enclosure 7.7.

5.13.2.7 **IF** needed, reserve any remaining liquid sample for use as a backup.

5.13.3 **IF** approved by OSC & RP, prepare Panel for next use by performing the following: (PALSS Sample Panel)

- Fill buffer tanks(s) with ~ 600 mLs of buffer solution for calibrating the pH meter.
  - This solution will be pressurized with nitrogen gas to at least 60 psig using the nitrogen purge system inside the PALSS sample panel.
  - Connect tank(s) to quick connect fittings inside sample panel.

NOTE:
1. Always fill Buffer Tank A with a pH 7 buffer. Buffer Tank B should be filled with a pH 4 buffer if expected pH < 7.0 **OR** a pH 10 buffer if expected pH > 7.0.
2. Buffer tanks may be pre-prepared and stored inside of PALSS sample panel. Verify that buffer expiration dates have not been exceeded.

- Fill the 50 mL sample flush cylinder with demineralized water for flushing the liquid sample from the Rheodyne sample injection valves.
  - While holding in a vertical position, attach the matching quick disconnects and fill the cylinder from the bottom to the top using demineralized water.
  - Connect to sample shelf inside sample panel.
- Replace Gas Bomb Septa.

5.13.4 Ensure all data is recorded and Enclosure 7.7 is complete.

5.13.5 Route this procedure along with the gamma spectra(s) to the OSC.

6. References

6.1 NUREG-0737, Section II.B.3

6.2 DPC System Radiation Protection Manual

6.3 Post Accident Liquid Sampling System Manual, Production Support Department, OM-311C-0331

6.4 ASTM Volume 11.01, D-1293-84 (1990)

6.5 DPC LM/O/P008

6.6 DPC LM/O/P004

6.7 ITS 5.5.4

7. Enclosures

7.1 Valve Arrangement Diagram (Control Panel)

7.2 Valve Arrangement Diagram (General - One Line)

7.3 PALSS Inlet Filter/Strainer Back Flush Procedure

7.4 Calculation of Hydrogen Concentration Using the Ideal Gas Law (Differential Pressure)

7.5 Unit 2 PALSS Power Supply

7.6 Operations Checklist for Unit 2 PALSS Operating Procedure Valve Lineups to Route Reactor Coolant to the PALSS/Waste to the RBES

7.7 PALSS Authorization for Operation and Data Transmittal Form

7.8 Operating the Analyzer/Controller

Enclosure 7.1

Valve Arrangement Diagram
(Control Panel)

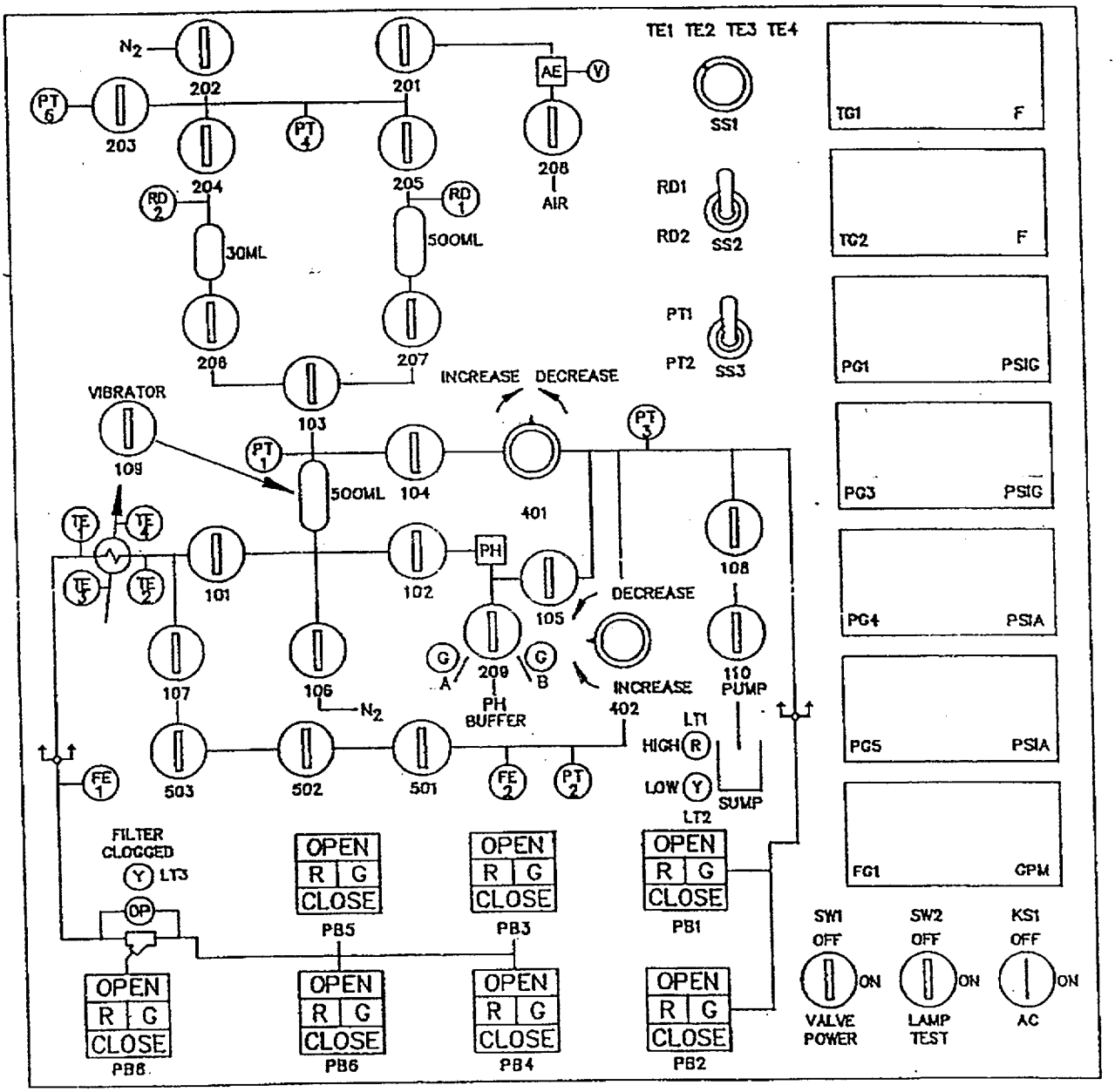

Enclosure 7.2

Valve Arrangement Diagram
(General - One Line)

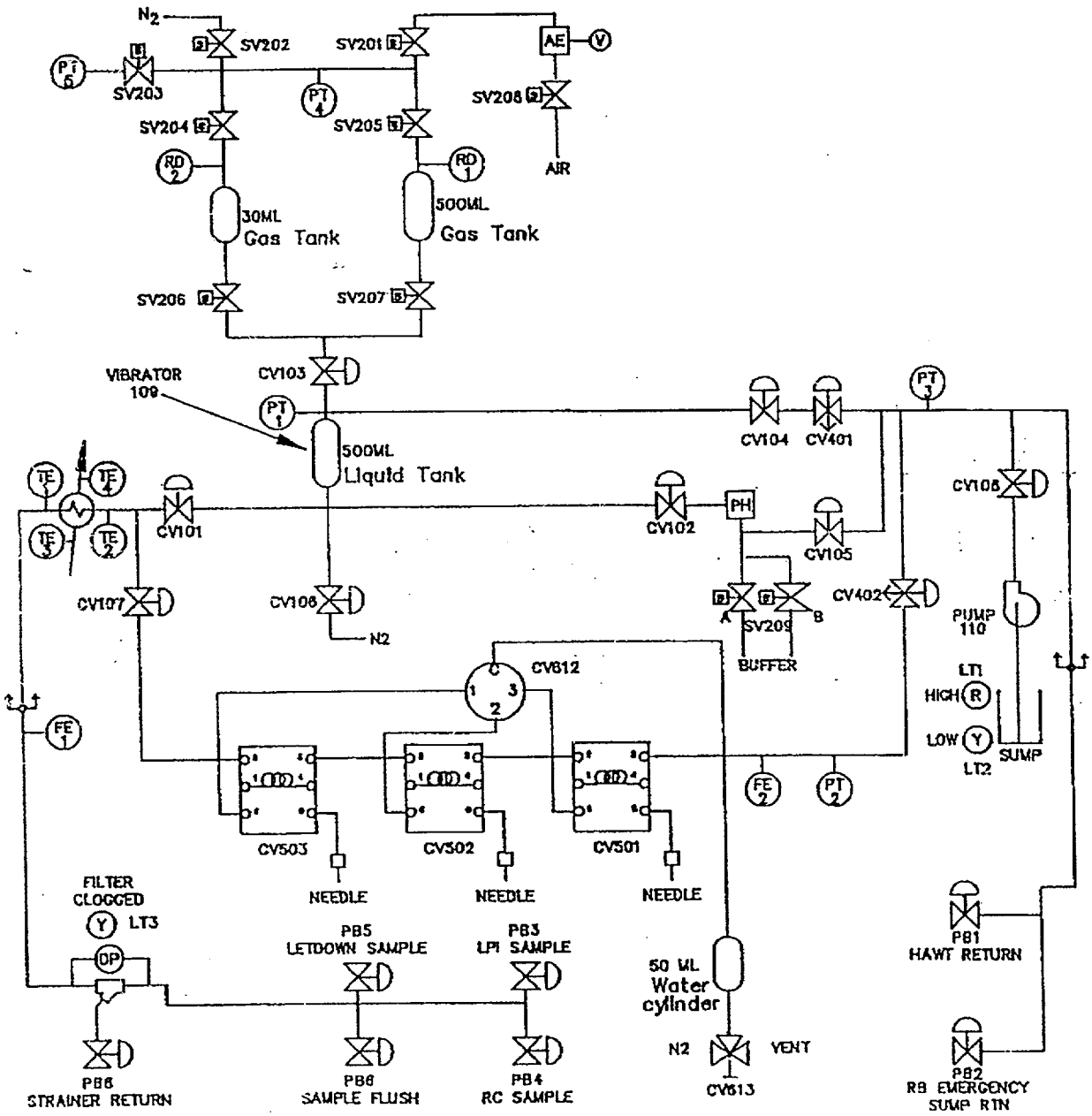

PALSS Inlet Filter/Strainer
Back Flush Procedure

1. Purpose

This enclosure gives instructions for back flushing the PALSS inlet filter/strainer.

2. Limits and Precautions

☐ The following RCS sample valves must be closed to prevent contamination of the demineralized water header with reactor coolant: (PALSS Control Panel)

- PB 5 (2LP-124, Isolation for HP Sample Stop)
- PB 3 (2LP-126, Isolation for LP Sample)
- PB4 (2RC-179, Post Accident Sample Block)

3. Procedure (PALSS Control Panel)

☐ 3.1 Ensure closed PB 5 (2LP-124, Isolation for HP Sample Stop).

☐ 3.2 Ensure closed PB 3 (2LP-126, Isolation for LP Sample).

☐ 3.3 Ensure closed PB 4 (2RC-179, Post Accident Sample Block).

☐ 3.4 After ≥ 30 seconds, close 104.

☐ 3.5 Ensure SS 3 (selector switch) is in the "PT-1" position.

☐ 3.6 Monitor pressure on PG-1 for one minute.

☐ 3.6.1 **IF** the pressure on PG-1 > 60 psi **OR** is increasing with time, immediately contact Chemistry Staff and notify the RCS may be leaking by PB 5 (2LP-124, Isolation for HP Sample Stop), PB 3 (2LP-126, Isolation for LP Sample) **OR** PB 4 (2RC-179, Post Accident Sample Block).

- Do **NOT** proceed without Staff approval.

☐ 3.7 Close 101

☐ 3.8 Open PB 8 (2LP-129, Sample Drain to the High Activity Waste Tank)

☐ 3.9 Open PB 6 (2DW-278, DW Flush Supply to Post Accident Sample)

☐ 3.10 Backflush ≥ 5 minutes, then close:

☐ 3.10.1 PB 6 (2DW-278, DW Flush Supply to Post Accident Sample)

☐ 3.10.2 PB 8 (2LP-129, Sample Drain to the High Activity Waste Tank)

☐ 3.11 **IF** the purpose is to resume sampling, open:

- PB 5 (2LP-124, Isolation for HP Sample Stop)

OR • PB 3 (2LP-126, Isolation for LP Sample)

OR • PB 4 (2RC-179, Post Accident Sample Block)

☐ 3.11.1 Open 104

☐ 3.11.2 Open 101

☐ 3.11.3 Return to procedural step allowing completion of the sampling process.

3.12 **IF** the clogged filter light is still "ON" and no flow is shown on FG 1, stop sampling.

3.13 Notify Chemistry Staff.

Staff notified: _____

Enclosure 7.4

Calculation of Hydrogen Concentration Using the Ideal Gas Law (Differential Pressure)

1. Purpose

This enclosure provides guidance on calculations for hydrogen using Ideal Gas Laws.

2. Limits and Precautions

N/A

3. Procedure

3.1 Record the initial and final temperature and pressure readings from Steps 5.7.6.4 and 5.7.6.8.

Initial Temperature Reading _____°F

Final Temperature Reading _____°F

Initial Pressure Reading _____ PSIA

Final Pressure Reading _____ PSIA

3.2 Calculate the average gas temperature reading using the following equation:

$$T_{avg} = (T_{final} + T_{init})/2$$

where, T_{avg} = Average Gas Temperature, °C

T_{final} = Final Gas Temperature Reading, °C

T_{init} = Initial Gas Temperature Reading, °C

3.3 Calculate the differential gas pressure using the following equation:

$$P_{diff} = P_{final} - P_{init}$$

where, P_{diff} = Differential Gas Pressure, PSI

P_{final} = Final Gas Pressure Reading, PSIA

P_{init} = Initial Gas Pressure Reading, PSIA

Calculation of Hydrogen Concentration Using the Ideal Gas Law (Differential Pressure)

3.4 Calculate the hydrogen concentration of the trapped PALSS gas sample using the following equation:

$$H_2 = \frac{(3{,}719.83)(P_{diff})}{(T_{avg} + 273)} + \frac{(P_{final} - 0.69)}{0.769}$$

(H_2 in Gas Sample) (H_2 remaining in Liquid Sample)

where, H_2 = PALSS gas sample Hydrogen Concentration, cc/Kg

3.5 Record hydrogen concentration result from Step 3.4 above on Enclosure 7.7.

Enclosure 7.5

Unit 2 PALSS Power Supply

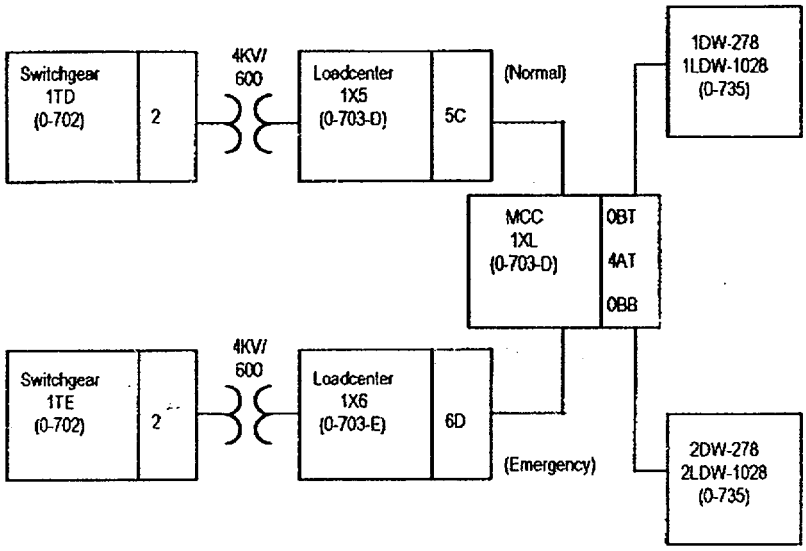

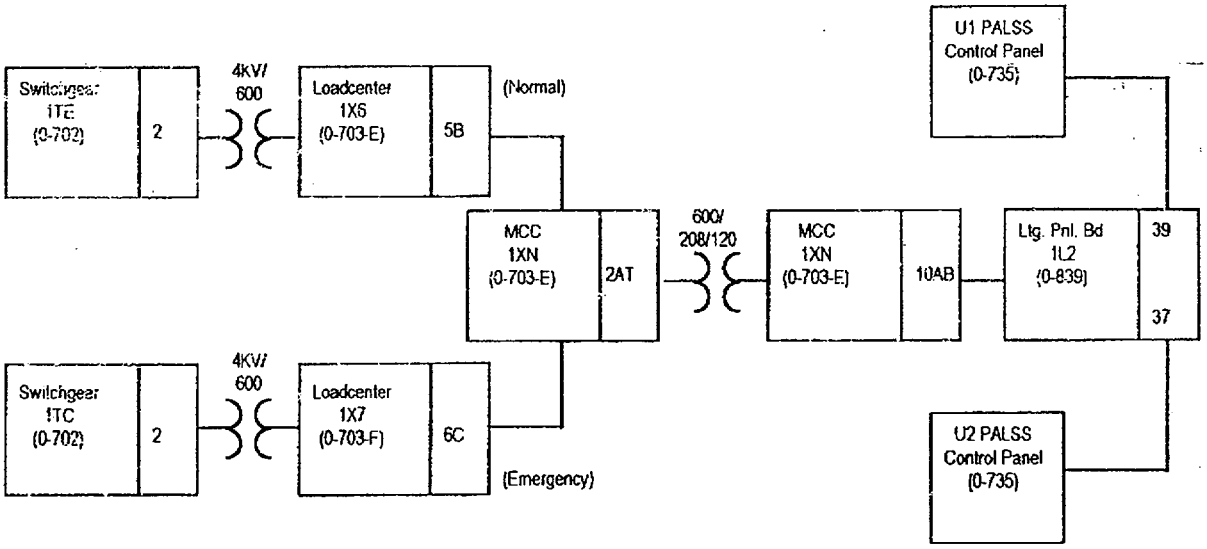

Operations Checklist for Unit 2 PALSS Operating Procedure Valve Lineups to Route Reactor Coolant to the PALSS/Waste to the RBES

1. Purpose

This enclosure gives the valve lineups needed for routing reactor coolant from the RCS "J" Leg through the PALSS to the RBES.

2. Limits and Precautions

☐ 2.1 Demineralized water header should be in service and have at least 60 psi pressure. RCW (sample cooling supply) should also be in service.

3. Procedure

3.1 Establish communications with Chemistry personnel assigned to the task.

Chemistry personnel assigned: _____

> **CAUTION:** IF containment integrity is required or is to be considered, station personnel in constant communication with the Control Room in the vicinity of 2LP-65 ('2B' Emer Sump Line Drain Block) to immediately close 2LP-65 IF ES actuation occurs.

_____ _____ 3.2 Open 2LP-65 ('2B' Emerg Sump Line Drn Blk) (Unit 2 LPI Room) manual valve to be operated by reach rod from LPI Hatch Room 119 (on west wall).
DV

_____ 3.3 Record that the valve is open in OP/0/A/1102/020 (Shift Turnover).

3.4 Establish flow to the PALSS panel via the RCS "J" Leg as follows:

3.4.1 Remove tag from breaker #14 on 2KVIB for:

- _____ 2RC-162 (RC Sample Isol Vlv) (inside RB, operated from Control Room)
- _____ 2RC-164 (RC Sample Isol Vlv) (Unit 2 LPI Room, operated from Control Room)

_____ 3.4.2 Close breaker #14.

_____ 3.4.3 Remove tag from breaker #4 on 2KVIA for 2RC-165, (RC Sample Isol Vlv 2RC-165 (Solenoid Vlv)). (Unit 2 LPI Room)

_____ 3.4.4 Close breaker #4.

Operations Checklist for Unit 2 PALSS Operating Procedure Valve Lineups to Route Reactor Coolant to the PALSS/Waste to the RBES

> **CAUTION:** **IF** containment integrity is required or is being considered, assign an Operator to close 2RC-162, 2RC-163, 2RC-164, and 2RC-165 in case of an ES Actuation.

_____ DV	_____	3.4.5	Open 2RC-162 (RC Sample Isol Vlv). (inside RB, operated from Control Room)
_____ DV	_____	3.4.6	Open 2RC-163 (PALS (Pene #5B) Sample Line Blk). (inside RB, operated from Control Room)
_____ DV	_____	3.4.7	Open 2RC-164 (RC Sample Isol Vlv). (Unit 2 LPI Room, operated from Control Room)
_____ DV	_____	3.4.8	Open 2RC-165 (RC Sample Isol Vlv 2RC-165 (Solenoid Vlv)). (Unit 2 LPI Room, operated from Control Room)
	_____	3.4.9	Record that 2RC-164 (RC Sample Isol Vlv) and 2RC-165 (RC Sample Isol Vlv 2RC-165 (Solenoid Vlv)) are open in OP/0/A/1102/020 (Shift Turnover).

3.5 Chemistry will notify Operations when the RCS sample has been obtained

Operations notified: _____

3.6 Chemistry will ask Operations to close the following valves. (operated from Control Room)

_____ DV	_____	3.6.1	2RC-165 (RC Sample Isol Vlv 2RC-165 (Solenoid Vlv)). (Unit 2 LPI Room)
_____ DV	_____	3.6.2	2RC-164 (RC Sample Isol Vlv). (Unit 2 LPI Room)
	_____	3.6.3	Record that containment isolation valves 2RC-164 (RC Sample Isol Vlv) and 2RC-165 (RC Sample Isol Vlv 2RC-165 (Solenoid Vlv)) are closed in OP/0/A/1102/020 (Shift Turnover).
_____ DV	_____	3.6.4	2RC-163 (PALS (Pene #5B) Sample Line Blk). (Reactor Building)
_____ DV	_____	3.6.5	2RC-162 (RC Sample Isol Vlv). (Reactor Building)

Operations Checklist for Unit 2 PALSS Operating Procedure Valve Lineups to Route Reactor Coolant to the PALSS/Waste to the RBES

3.7 **WHEN** RCS sampling is complete, ensure open the following breakers:

_____ 3.7.1 Tag open breaker #9 on 1KVIB for OP/2/A/1102/001 (Unit Startup).

NOTE: Both 2RC-162 (RC Sample Isol Vlv) and 2RC-164 (RC Sample Isol Vlv) are powered from this breaker.

_____ 3.7.2 Tag open breaker #4 on 1KVIA for 2RC-165 (RC Sample Isol Vlv 2RC-165 (Solenoid Vlv)) for OP/2/A/1102/001 (Unit Startup).

_____ 3.8 Close 2LP-65 ('2B' Emerg Sump Line Drn Blk). (operated by reach rod from LPI Hatch Rm. 119, on west wall).

3.9 Record that 2LP-65 ('2B' Emerg Sump Line Drn Blk) is closed in OP/0/A/1102/020 (Shift Turnover).

3.10 Ensure completed enclosure is maintained by Chemistry.

Enclosure 7.7

PALSS Authorization for Operation and Data Transmittal Form

Date _____

_____ 1. **Verbal/written direction for sampling the Reactor Coolant via the PALSS has been received from the TSC/OSC.**

Sample Point: RCS "J-Leg" _____ Waste Route: RBES _____

LPI Pump Discharge_____ HAWT _____

HPI Letdown _____

Person Authorizing Sampling _____

_____ 2. **The specific post-accident analysis requested by TSC/OSC:**

____ Boron = _____ppm

____ Hydrogen = _____cc/kg

____ Chloride = _____ppm

____ pH = _____

____ Gas Gamma (attach)

____ Liquid Gamma (attach)

____ Other (specify) _____

3. **Have RP determine general area dose rate at the PALS valve panel and record below.**

Dose rate (general area) = _____ r/hr

_____ 4. **Determine by detailed planning meeting the exact course of action and data required.**

_____ 5. **Evaluate the use of portable shielding, remove handling equipment, video equipment, etc., to minimize the exposure to personnel while sampling.**

_____ 6. **Have RP determine the required respiratory equipment and protective clothing to prevent or minimize internal exposure in any Planned Emergency situation. Use high range and/or extremity dosimetry if required.**

_____ 7. **Determine how long to flush the PALSS sample panel, based on general area dose readings.**

_____ 8. **Request RP to designate a route from PALSS to the Lab.**

Sample route designated:_____

_____

9. **Evaluate the use of portable shielding, remove handling equipment, video equipment, etc., to minimize the exposure to personnel in the Lab for the required analyses.**

Front panel keys used for all operator tasks

Table 1-1 Key Functions

Key	Name	Use
	DISPLAY	**When process values are on display:** Use **DISPLAY** to cycle through available real-time displays. **When the main menu (Configuration, Calibration, Maintenance, I/O Setup) is on display:** Use **DISPLAY** to return to displaying process values.
	MENU	**When process values are on display:** Use **MENU** to access the menus. If the security feature is enabled, the display will prompt for entry of the password before access to the menus is permitted. (Enter the password using the procedure for editing a parameter numeric value as described on the next page.) **When any menu or configuration screen is on display:** Use **MENU** to go up a level in the display hierarchy. Frequently this means returning to the main menu.
	UP	**When a menu or configuration screen is on display:** Use **UP** to highlight a different item. **When changing a numerical value:** Use **UP** key to increment the value of the digit at the cursor.
	DOWN	**When a menu or configuration screen is on display:** Use **DOWN** to highlight a different item. **When changing a numerical value:** Use **DOWN** to decrement the value of the digit at the cursor.
	ENTER	**When a menu item is highlighted:** Use **ENTER** to select it. **When editing a parameter:** Use **ENTER** to save the new value.
F1	F1, F2, F3 [function keys]	**When a "soft key" label is displayed below the alarm stripe:** Use the function key directly below the label to perform the action.

(R04-01)

Duke Power Company
PROCEDURE PROCESS RECORD

(1) ID No. CP/3/A/2002/004 C
Revision No. 19

INFORMATION ONLY

Continuous Use

PREPARATION

(2) Station Oconee Nuclear Station

(3) Procedure Title Operating Procedure for the Post Accident Liquid Sampling (PALSS)

(4) Prepared By [signature] Date 10-8-01

(5) Requires NSD 228 Applicability Determination?
- ☑ Yes (New procedure or revision with major changes)
- ☐ No (Revision with minor changes)
- ☐ No (To incorporate previously approved changes)

(6) Reviewed By [signature] (QR) Date 1-7-02

Cross-Disciplinary Review By _____ (QR) NA HOC Date _____

Reactivity Mgmt. Review By _____ (QR) NA HOC Date _____

Mgmt. Involvement Review By _____ (Ops. Supt.) NA HOC Date _____

(7) Additional Reviews

QA Review By _____ Date _____

Reviewed By _____ Date _____

Reviewed By _____ Date _____

(8) Temporary Approval *(if necessary)*

By _____ (OSM/QR) Date _____

By _____ (QR) Date _____

(9) Approved By Dale White for BLW Date 1-8-02

PERFORMANCE *(Compare with control copy every 14 calendar days while work is being performed.)*

(10) Compared with Control Copy _____ Date _____

Compared with Control Copy _____ Date _____

Compared with Control Copy _____ Date _____

(11) Date(s) Performed _____

Work Order Number (WO#) _____

COMPLETION

(12) Procedure Completion Verification

- ☐ Yes ☐ NA Check lists and/or blanks initialed, signed, dated, or filled in NA, as appropriate?
- ☐ Yes ☐ NA Required enclosures attached?
- ☐ Yes ☐ NA Data sheets attached, completed, dated, and signed?
- ☐ Yes ☐ NA Charts, graphs, etc. attached, dated, identified, and marked?
- ☐ Yes ☐ NA Procedure requirements met?

Verified By _____ Date _____

(13) Procedure Completion Approved _____ Date _____

(14) Remarks *(Attach additional pages, if necessary)*

Operating Procedure for the Post Accident Liquid Sampling System (PALSS)

NOTE:
1. This **entire** procedure supports an AP or EOP action. The procedure will require AP/EOP validation per NSD 705.
2. Seven Control copies and one Information Only copy of this procedure shall be routed to the Emergency Preparedness Team within three working days after any approved changes.

1. Purpose

The post accident liquid sampling system (PALSS) provides the capability to obtain a primary coolant sample via the HPI Letdown, LPI Pump Discharge or the RCS "J" leg during a nuclear reactor accident condition(s) as described in the FSAR and in accordance with NUREG-0737.

2. Limits and Precautions

☐ 2.1 This procedure should be used to operate PALSS to sample the Reactor Coolant System under the following conditions:

2.1.1 Post Accident.

2.1.2 Inaccessibility of (routine) Primary Sampling Area **AND/OR** HPI Letdown Sampling not possible.

2.1.3 Request from the Chemistry Manager or his designee.

☐ 2.2 Under accident conditions, valve alignments shall **NOT** be made and samples shall **NOT** be taken without prior authorization from the Emergency Coordinator **OR** the TSC/OSC! (Containment isolation valves may be closed upon ES actuation, see Enclosure 7.6.)

☐ 2.3 Under accident conditions, do **NOT** attempt any phase of sampling **OR** analysis without Radiation Protection job coverage!

☐ 2.4 Consider portable shielding, remote handling equipment, video equipment, etc., where practical or available during sampling, sample preparation, and sample analysis.

☐ 2.5 Chemistry personnel shall operate only those valves operated by the Control Panel **OR** via the sample panel unless clearly specified otherwise in this procedure.

☐ 2.6 **IF** power is **NOT** available at the PALSS Control Panel, return to a low dose area and contact Chemistry management.

2.6.1 Refer to Enclosure 7.5 and troubleshoot as required to determine source of problem.

2.6.2 Notify the OSC/TSC.

2.6.3 **IF** necessary, request the OSC have Operations ensure the following breakers are closed (to ensure power availability).

- 3KTH1 Bkr. #8 Sampling/Control Panels Power Supply (located next to U3 sampling panel)
- MCC3XL Bkr. 4CT for 3DW-278 (DW Flush Supply to Post Accident Sample) (PALSS Control Panel)

CAUTION: Chemical hazards shall be known prior to use. For additional information and first aid requirements, refer to the MSDS sheet.

☐ 2.7 Personal protective requirements for chemicals used in this procedure are pH buffers 4.0, 7.0, and 10.0:

- lab coat
- gloves (rubber/vinyl)
- chemical splash goggles

☐ 2.8 **WHEN** flushing the desired sample to the waste tanks, request Operations add a second compressor on the GWD header because fresh fission gasses may cause a serious problem in the Aux. Building.

- **IF** possible, this increased vacuum should be maintained until sampling is complete.

☐ 2.9 All sample vials should be cleaned and rinsed to protect against chloride contamination.

- Do **NOT** place bare finger tips on the surface of the septum.

3. Apparatus

3.1 A minimum of 4 Lockable Glass (Gas) Syringes (1 to 2 mL size only)

3.2 Liquid Sample Carrier (Bucket, Etc.), Gas Syringe Carrier

3.3 Watch or Lab Timer

3.4 Plastic Bags

3.5 15 - 40cc Evacuated Sample Vial(s) for Liquid Sample

3.6 Nitrogen Supply Bottle with > 600 psi available. (with Two Stage Regulator; 0 to 200 psig on Delivery Stage) replace as required

4. Reagents

4.1 Buffer Solutions - Use purchased 4.00, 7.00 and/or 10.00 buffers or equivalent

5. Procedure

5.1 Prerequisites and Panel Preparation (preliminary)

5.1.1 Initiate Enclosure 7.7.

5.1.2 **IF** routing waste to the RBES or sampling from the RCS "J" Leg:

- Take Enclosure 7.6 to the responsible individual in Operations (designated by the OSC) for completion.
- Request Operations complete the appropriate step(s) of Enclosure 7.6.

5.1.3 Label glass vial(s) for collecting the liquid sample.

5.2 Panel Preparation (prior to sampling)

NOTE: **IF** any item on the control or sample panel is not clearly identified, refer to Enclosure 7.1 and 7.2.

☐ 5.2.1 Inform the U-3 Control Room that sampling of the RCS will be done via the PALSS panel.

- Identify the flowpath J-Leg, LPI **OR** Letdown.
- Recommend an extra waste gas compressor be placed into service.

Operator Notified: _____

☐ 5.2.2 At the Control Panel, ensure SW 1 (valve power switch), is in the "OFF" position.

CAUTION: Make the mating of connector cable 1 to connector 1 on the Junction Box the LAST cable connection made. **IF** this is not done last, the exposed pins of the other cables may become energized and become an electrical hazard.

☐ 5.2.3 Position the Control Panel using RP as a guideline, in the lowest dose area possible.

☐ 5.2.4 **IF** necessary, route and connect the six required cables (CON 6 - CON 1) from the Control Panel to the Junction Box, starting with connector 6 and ending with connector 1.

☐ 5.2.4.1 Connect CON-6 cable at both ends.

☐ 5.2.4.2 Connect CON-5 cable at both ends.

☐ 5.2.4.3 Connect CON-4 cable at both ends.

☐ 5.2.4.4 Connect CON-3 cable at both ends.

☐ 5.2.4.5 Connect CON-2 cable at both ends.

☐ 5.2.4.6 Connect CON-1 cable at the PALSS control panel end.

☐ 5.2.4.7 Connect CON-1 cable to the junction box last.

☐ 5.2.5 Ensure off all control and solenoid valves (no lights).

5.2.6 Position the following valves: (outside of Sample Panel)

CAUTION: Nitrogen cylinder must be replaced if pressure is < 600 psig in order to prevent backflow of fission gas into the cylinder.

☐ Open valve(s) on Nitrogen Supply Bottle (> 600 psi tank pressure required & ~100 psi delivery pressure)

☐ **IF** necessary, replace cylinder.

☐ Open 3IA-2423 (IA to Post Accident Sample Panel).

NOTE: The following switches are found on the PALSS Control Panel.

☐ 5.2.7 Turn system power on by inserting Control Panel Key into (KS 1) Key Lock Switch and turning the key.

NOTE: The lights in the middle of each switch which controls a valve should be "OFF". The green lights should be "LIT" on the push-button switches, (PB 1) through (PB 8).

☐ 5.2.8 Ensure all lamps on the Control Panel are functioning by turning ON SW 2 (lamp test switch).

5.2.9 Make note of **OR** repair any not functioning properly. (The lamp test switch does not light).

☐ 5.2.9.1 Turn SW 2 (lamp test switch) to "OFF".

☐ 5.2.10 Turn SW 1 (valve power switch) to the "ON" Position.

NOTE: In an accident situation, waste will be routed to the RBES unless otherwise directed by supervision. The alternate route is the HAWT via PB1 (3LP-130).

_____ 5.2.11 **IF** routing waste to the RBES, open PB2 (3LP-65, 3B Emerg Sump Line Drn Blk).

_____ 5.2.12 **IF** routing waste to the HAWT, open PB1 (3LP-130, HAWT Return).

5.3 Panel Preparation (pH Meter Standardization) (PALSS Control Panel)

5.3.1 Purge the pH housing with Nitrogen as follows:

NOTE: All other control valves must be closed.

☐ 5.3.1.1 Open 204

☐ 5.3.1.2 Open 206

☐ 5.3.1.3 Open 103

☐ 5.3.1.4 Open 102

☐ 5.3.1.5 Open 105

☐ 5.3.1.6 Open 202

☐ 5.3.1.7 Wait at least 2 minutes, close 105.

5.3.2 Pressurize Buffer Tank A as follows:

NOTE: SV 209 controls both buffer tanks (A and B).

☐ 5.3.2.1 Place 209 in the 'A' position.

☐ 5.3.2.2 Wait at least 30 seconds., then place 209 in the "OFF" position.

☐ 5.3.2.3 Close 202

5.3.3 Evacuate pH housing as follows:

☐ 5.3.3.1 Open 208

☐ 5.3.3.2 Open 201

☐ 5.3.3.3 **WHEN** the pressure on PG 4 stabilizes (normally < 2.0 PSIA),

☐ A. Close 201

☐ B. Record the pH Housing pressure from PG 4 **OR** PG 5.

pH Housing Pressure for A Buffer = _____ PSIA

☐ 5.3.3.4 Close 102

☐ 5.3.3.5 Close 103

☐ 5.3.3.6 Close 206

☐ 5.3.3.7 Close 204

☐ 5.3.3.8 Close 208

5.3.4 Transfer A Buffer into the pH housing as follows:

☐ 5.3.4.1 Place 209 in the 'A' position.

☐ 5.3.4.2 Wait at least 1 minute, then place 209 in the "OFF" position.

5.3.5 Standardize the pH meter as follows:

NOTE:
1. The following keys are located on the pH meter in the face of the PALSS control panel.
2. Refer to Enclosure 7.8 for pH meter key descriptions.

5.3.5.1 Use the "menu" key to move to the main menu., The display will show: ("Configuration, Calibration, Maintenance, I/O Setup").

5.3.5.2 Using the "arrow up or down" keys, move to and highlight "Calibration".

5.3.5.3 Press "enter".

5.3.5.4 Using the "arrow up or down" keys, move to and highlight "Calibration / Buffer Calibration pH", then press Enter.

5.3.5.5 Press the "Hold" key.

5.3.5.6 Press the "next" key to move to the next screen.

NOTE:
- A flashing value indicates the probe may be broken.
- A value that **CANNOT** be adjusted to within ± .5 pH offset will make the unit return to the calibration screen, indicating that the pH electrode may need to be replaced.

5.3.5.7 The display will show the pH of the 'A' buffer solution.

5.3.5.8 Wait for a stable reading. Press the up or down arrow once to activate the side to side arrows. Then using the "function keys, side to side" select the desired digit space and change the value on the display using the "arrow up and down" keys to match the actual 'A' buffer pH.

5.3.5.9 **WHEN** the unit display indicates the buffer pH, press the "ENTER" key.

5.3.5.10 Record the pH meter value set for the 'A' buffer pH.

'A' Buffer Solution pH _____

5.3.5.11 **WHEN** the unit successfully meets the preset specifications and the entered buffer value is displayed, press "next" until the screen with the following is visible:

SLOPE

Note: Buffer must be > 2 pH units away from the STD buffer.

NOTE:	The unit should still be in the "hold" mode.

5.3.5.12 Press "next". The following screen should be visible:

SLOPE

Place electrode in Buffer Attention.
Wait for Stable Reading!

5.3.6 Flush the pH housing with DW as follows:

☐ 5.3.6.1 Open 101

☐ 5.3.6.2 Open 102

☐ 5.3.6.3 Open 105

☐ 5.3.6.4 Open PB-6 (3DW-278, DW Flush Supply to Post Accident Sample).

☐ 5.3.6.5 Wait at least 5 minutes, close 101.

☐ 5.3.6.6 Close PB-6 (3DW-278, DW Flush Supply to Post Accident Sample).

5.3.7 Purge the demineralized water out of the pH housing with nitrogen as follows:

- ☐ 5.3.7.1 Open 202
- ☐ 5.3.7.2 Open 204
- ☐ 5.3.7.3 Open 206
- ☐ 5.3.7.4 Open 103
- ☐ 5.3.7.5 Place 209 in the 'A' position.
- ☐ 5.3.7.6 Place 209 in the "OFF" position.
- ☐ 5.3.7.7 After at least 2 minutes, close 105.

5.3.8 Pressurize Buffer Tank B as follows:

- ☐ 5.3.8.1 Place 209 in the 'B' position.
- ☐ 5.3.8.2 Wait at least 30 seconds, place 209 in the "OFF" position.
- ☐ 5.3.8.3 Close 202

5.3.9 Evacuate pH housing as follows:

- ☐ 5.3.9.1 Open 208
- ☐ 5.3.9.2 Open 201
- ☐ 5.3.9.3 **WHEN** the pressure on PG 4 stabilizes (normally < 2.0 PSIA), close 201.
- ☐ 5.3.9.4 Record pH Housing pressure from PG 4.

  pH Housing Pressure for B Buffer = _____ PSIA
- ☐ 5.3.9.5 Close 102
- ☐ 5.3.9.6 Close 103
- ☐ 5.3.9.7 Close 206
- ☐ 5.3.9.8 Close 204
- ☐ 5.3.9.9 Close 208

5.3.10 Transfer B Buffer into the pH housing as follows:

☐ 5.3.10.1 Place 209 in the 'B' position.

☐ 5.3.10.2 Wait at least 1 minute, place 209 in the "OFF" position.

5.3.11 Calibrate the pH meter as follows: (pH meter on the face of the PALSS Control Panel)

NOTE: The unit should still be in the "HOLD" mode. This key causes the pH meter to maintain a constant output and alarm condition. This allows the electrode to be removed (optional) for calibration in a buffer without process upset. The temperature compensation feature is also disabled in the "HOLD" mode (this allows calibration of the meter to the particular temperature of the buffer used).

5.3.11.1 Press "next". The display will show the pH of the 'B' buffer as measured by the electrode.

5.3.11.2 Wait for a stable reading. Press the up or down arrow once to activate the side to side arrows. Then select the desired digit space using the "function keys side to side".

5.3.11.3 Adjust the value on the display using the "arrow up and down" keys, until the display matches the actual pH of the buffer solution.

5.3.11.4 Press "enter". This will set the instrument slope.

5.3.11.5 Record the pH meter value set for the 'B' buffer pH.

'B' Buffer Solution pH _____

5.3.11.6 **IF** the slope adjustment was successful, the Completed screen will be displayed:

SLOPE
Slope Completed
Slope Buffer Value Saved

5.3.11.7 Using the "hold" key, take the unit out of the hold mode.

NOTE:	**IF** the calibration was not successful, the menu will return to the original Calibration Menu by itself and display an error code.

5.3.11.8 Use the "next" key to rotate back to the original Calibration menu screen.

5.3.11.9 Press the "Display" key. The pH meter is now in the sample measurement mode.

5.3.12 Flush the pH housing with DW as follows:

- ☐ 5.3.12.1 Open 101
- ☐ 5.3.12.2 Open 102
- ☐ 5.3.12.3 Open 105
- ☐ 5.3.12.4 Open PB 6 (3DW-278, DW Flush Supply to Post Accident Sample)
- ☐ 5.3.12.5 Wait ≥ 3 minutes, close 101.
- ☐ 5.3.12.6 Close PB 6 (3DW-278, DW Flush Supply to Post Accident Sample)

5.3.13 Purge the demineralized water out of the pH housing with nitrogen as follows:

- ☐ 5.3.13.1 Open 202
- ☐ 5.3.13.2 Open 204
- ☐ 5.3.13.3 Open 206
- ☐ 5.3.13.4 Open 103
- ☐ 5.3.13.5 Wait ≥ 2 minutes **OR** until pressure on PG 3 drops rapidly (below 50 psi), then close 105.
- ☐ 5.3.13.6 Place the 209 in the 'B' position.
- ☐ 5.3.13.7 Place the 209 in the "OFF" position.
- ☐ 5.3.13.8 Close 202
- ☐ 5.3.13.9 Close 204

☐ 5.3.13.10 Close 206

☐ 5.3.13.11 Close 103

☐ 5.3.13.12 Close 102

5.4 Panel Preparation (pH Housing and Gas Tank(s) Evacuation) (PALSS Control Panel)

5.4.1 Evacuate pH housing and gas tanks as follows:

☐ 5.4.1.1 Open 208

☐ 5.4.1.2 Open 201

☐ 5.4.1.3 Open 203

☐ 5.4.1.4 Open 204

☐ 5.4.1.5 Open 205

☐ 5.4.1.6 Open 206

☐ 5.4.1.7 Open 207

☐ 5.4.1.8 Open 103

☐ 5.4.1.9 Open 102

☐ 5.4.1.10 Monitor the pressure in the pH housing and gas tanks on PG 5 **OR** PG 4.

- **WHEN** the pressure stabilizes (normally < 2.0 PSIA), close 201.

☐ 5.4.1.11 Close 208

5.4.2 pH Housing Pressure

☐ 5.4.2.1 Record pH Housing pressure from PG 5 (alternate PG 4).

pH Housing Pressure _____ PSIA

☐ 5.4.2.2 Close 102

☐ 5.4.2.3 Close 103

☐ 5.4.2.4 Close 206

☐ 5.4.2.5 Close 207

5.4.3 30 mL and 500 mL Gas Tanks Pressure

☐ 5.4.3.1 Record gas tank pressures from PG 5 (alternate PG 4).

Gas tanks (30mL and 500mL) pressure _____ PSIA

☐ 5.4.3.2 Close 205

☐ 5.4.3.3 Close 204

☐ 5.4.3.4 Close 203

5.5 Panel Operation (Reactor Coolant Sample Flush/Acquisition) (PALSS Control Panel)

NOTE: The sample will be taken via the LPI pump discharge, HPI Letdown, or the RCS "J-Leg" sample point.

CAUTION:
1. PB 6 (3DW-278) must be closed to prevent flow of RCS into the demineralized water header.
2. CV-102 and CV-105 must be closed to prevent overpressurization and failure of the pH housing.

5.5.1 Ensure closed the following valves:

☐ 5.5.1.1 Close PB-6 (3DW-278, DW Flush Supply to Post Accident Sample).

☐ 5.5.1.2 Close 102

☐ 5.5.1.3 Close 105

☐ 5.5.2 Ensure SS 3 (selector switch) is in the "PT 1" position.

_____ 5.5.3 **IF** sampling the RCS "J-Leg", then open PB 4 (3RC-179, Post Accident Sample Block).

_____ 5.5.4 **IF** sampling the LPI pump Discharge, then open PB 3 (3LP-126, DH Cooler Sample).

_____ 5.5.5 **IF** sampling the HPI Letdown, then open PB 5 (3LP-124, Letdown Sample Stop).

☐ 5.5.6 Open 104

☐ 5.5.7 Open 104

CAUTION: Monitor PG 3 to ensure that the outlet pressure does **NOT** exceed 600 PSIG. Adjust slowly.

☐ 5.5.8 Open 401 to establish the maximum flow without exceeding 600 PSIG on PG 3.

☐ 5.5.9 Record the flowrate from FG1 _____ gpm.

☐ 5.5.10 Record the pressure from PG 3 _____ psig.

5.5.11 **IF** LT 3 (clogged filter light switch) comes on and remains on, but flow on FG-1 is > 1.5 gpm, continue with procedure.

- **IF** flow is < 1.5 gpm, contact Chemistry Staff for further instructions.
- **IF** directed by management, proceed to Enclosure 7.3.

☐ 5.5.12 Select the desired thermocouple to monitor the inlet **OR** outlet of the sample **OR** the cooling water using SS 1:

TE 1 - Measures sample inlet to heat exchanges.

TE 2 - Measures sample return from heat exchanger.

TE 3 - Measures cooling water inlet to heat exchanger.

TE 4 - Measures cooling water return from heat exchanger.

☐ 5.5.12.1 Switch SS 1 to "TE 1"

☐ 5.5.12.2 Record sample inlet temperature on TG 1.

INLET TEMPERATURE _____°F

☐ 5.5.12.3 Switch SS 1 to "TE 2".

☐ 5.5.12.4 Record sample outlet temperature on TG 2.

OUTLET TEMPERATURE _____°

5.5.13 After > 15 gallons have flowed through the system (calculate time based on FG-1 reading):

☐ 5.5.13.1 Slowly throttle 401 until fully closed.

☐ 5.5.13.2 Immediately close 104

☐ 5.5.13.3 Immediately close 101

☐ 5.5.13.4 Record 500 mL liquid tank pressure from PG 1.

Pressure = _____ PSIG

☐ 5.5.14 Move selector switch SS 3 to the "PT 2" position to measure discharge pressure of the injection valves.

NOTE: There are two continuous flow paths through the sample valve(s). When the valve(s) is opened, the sample loop is moved to the sample flow path. When the valve(s) is closed, the sample loop is moved to the sample injection (collection) flow path.

5.5.15 Ensure open the desired sample injection valve(s) of the 0.1 mL, 1 mL and/or 5 mL loop, respectively (normally the 5 mL and 1 mL loop are used):

☐ 503 (0.1 mL Loop)

☐ 502 (1 mL Loop)

☐ 501 (5 mL Loop)

☐ 5.5.16 Open 107

☐ 5.5.17 Slowly open 402 keeping flowrate on FG 2 < 300 mL/min.

NOTE:	Greater than 40 PSIG sample pressure must be supplied to the injection valves.

5.5.18 After ≥ 5 minutes, close the sample injection valve(s) opened in Step 5.5.15.

☐ 503 (0.1 mL Loop)

☐ 502 (1 mL Loop)

☐ 501 (5 mL Loop)

5.5.19 Record sample time: _____

_____ 5.5.20 Close the sample valve selected in Step 5.5.3 or 5.5.4 or 5.5.5

- PB 4 (3RC-179, Post Accident Sample Block)
- PB 3 (3LP-126, DH Cooler Sample)
- PB 5 (3LP-124, Letdown Sample Stop)

☐ 5.5.21 After 1 minute, close 402.

CAUTION:	**IF** the pressure on PG-1 is > 100 psi or is increasing with time, contact Chemistry Staff and notify that RCS is leaking by sample valve.

☐ 5.5.22 After 1 minute, record the pressure on PG-1: _____psi

☐ 5.5.23 Close 107

5.6 Depressurization (PALSS Control Panel)

☐ 5.6.1 Ensure SS 3 (selector switch) is in the "PT 1" position.

☐ 5.6.2 Ensure closed 206

☐ 5.6.3 Ensure closed 207

☐ 5.6.4 Open 103

☐ 5.6.5 Wait ≥ 2 minutes.

NOTE:	Pressure on PG 1 should be < 50 PSIG.

☐ 5.6.6 Record the pressure from PG 1 _____ PSIG.

5.7 Gas Collection (PALSS Control Panel)

5.7.1 Verify pressure in the 30 mL and 500 mL gas tank is ≤ 2.0 PSIA.

For 500 mL Gas Tank:

☐ 5.7.1.1 Open 205

☐ 5.7.1.2 Open 203

☐ 5.7.1.3 Record PG 5 (alternate gauge PG 4).

500 mL Gas Tank Pressure _____

☐ 5.7.1.4 Close 205

☐ 5.7.1.5 Close 203

For 30 mL Gas Tank:

☐ 5.7.1.6 Open 204

☐ 5.7.1.7 Open 203

☐ 5.7.1.8 Record PG 5 (alternate gauge PG 4).

30 mL Gas Tank Pressure _____

☐ 5.7.1.9 Close 204

☐ 5.7.1.10 Close 203

5.7.2 **IF** the pressure in the 30 mL and 500 mL Gas Tank is ≤ 2.0 PSIA, proceed to Step 5.7.5 **IF** the Nitrogen stripping method is to be used for gas collection and analysis.

5.7.3 **IF** the alternate method (Total Gas Method) is to be used, proceed to Step 5.7.6.

☐ 5.7.4 **IF** the pressure in the 30 mL **OR** 500 mL Gas Tank is > 2.0 PSIA, then evacuation of the tanks must be repeated as follows:

☐ 5.7.4.1 Close 103

☐ 5.7.4.2 Open 204

☐ 5.7.4.3 Open 205

☐ 5.7.4.4 Open 201

☐ 5.7.4.5 Open 208

☐ 5.7.4.6 Open 203

5.7.4.7 **WHEN** the reading from PG 5 (alternate gauge PG 4) is ≤ 2.0 PSIA, close

☐ A. 204

☐ B. 205

☐ C. 201

☐ D. 208

☐ E. 203

☐ 5.7.4.8 Open 103

5.7.4.9 **IF** the Nitrogen stripping method is to be used for gas collection and analysis, continue with Step 5.7.5.

5.7.4.10 **IF** the alternate method (Total Gas Method) is to be used, proceed to Step 5.7.6.

NOTE:	Nitrogen Stripping Method is the typical method.

5.7.5 Nitrogen Stripping Method (Gas Analysis)

☐ 5.7.5.1 Ensure closed 205

☐ 5.7.5.2 Open 207

☐ 5.7.5.3 Open 106

NOTE:	The pressure on PG-1 should be monitored for an increase of approximately 15 psi. Because PT-1 is a high range pressure transmitter the indicated reading on PG-1 will vary from calibration to calibration and may indicate anywhere from -15 to 15 psi initially.

☐ 5.7.5.4 For a 10 minute interval, periodically turn on 109 to vibrate 500 mL liquid tank, monitor the pressure on PG 1 (switch SS 3 to "PT 1").

☐ 5.7.5.5 Close 106

☐ 5.7.5.6 Open 205

☐ 5.7.5.7 Open 204

5.7.5.8 After ≥ 5 minutes when PG 4 (alternate PG 1) stabilizes, close:

☐ A. 204

☐ B. 205

☐ C. 207

☐ D. 103

5.7.5.9 Proceed to Section 5.8.

NOTE:	Calculated method should be used only as an alternate.

5.7.6 Total Gas Method (Calculated)

☐ 5.7.6.1 Monitor PG 4.

☐ 5.7.6.2 **WHEN** the pressure shown on PG 4 is < 30 PSIA, the low range pressure transmitter, PT 5, can be used to obtain a more accurate pressure measurement.

- PT 5 can be used by opening 203.

☐ 5.7.6.3 Ensure SS 2 switch is in the "RD 2" position.

☐ 5.7.6.4 Record the initial temperature reading from TG 2 and pressure reading from PG 5.

TG 2 Init. Temp. Reading _____°F

PG 5 Init. Press. Reading _____ PSIA

☐ 5.7.6.5 Open 206

☐ 5.7.6.6 Open 204

☐ 5.7.6.7 Turn on the vibrator using 109 and monitor PG 5.

☐ 5.7.6.8 **WHEN** the pressure of the 30 mL gas tank stabilizes, record the final pressure and temperature.

TG 2 Final Temp. Reading _____°F

PG 5 Final Press. Reading _____ PSIA

☐ 5.7.6.9 Close 203

☐ 5.7.6.10 Close 204

☐ 5.7.6.11 Close 206

☐ 5.7.6.12 Ensure 109 is off.

☐ 5.7.6.13 Close 103

☐ 5.7.6.14 Calculate the total amount of H_2 in the sample using Enclosure 7.4.

☐ 5.7.6.15 Report results on Enclosure 7.7.

5.8 Sample pH Measurement (PALSS Control Panel)

☐ 5.8.1 Ensure closed 206

☐ 5.8.2 Ensure closed 204

☐ 5.8.3 Ensure SS 3 switch is set on PT 1.

5.8.4 Pressurize liquid tank to at least 60 PSIG as monitored on PG 1 (alternate PG 4), as follows:

☐ 5.8.4.1 Open 202

☐ 5.8.4.2 Open 205

☐ 5.8.4.3 Open 207

☐ 5.8.4.4 Open 103

☐ 5.8.4.5 After 30 seconds, close 103.

☐ 5.8.4.6 Close 207

☐ 5.8.4.7 Close 205

☐ 5.8.4.8 Close 202

☐ 5.8.5 Open 102

5.8.6 Record pH on Enclosure 7.7.

☐ 5.8.7 Close 102

5.8.8 Notify OSC that RCS sampling via the PALSS is completed and that sample retrieval will begin following system flush.

OSC Person Notified: _____

5.9 System Flush (PALSS Control Panel)

NOTE:	Directions regarding sample panel flushing will be determined by management.

5.9.1 Ensure 204 and 206 remain closed and the sample injection valve(s) selected (501, 502 and/or 503) is turned off.

5.9.2 **IF** either LT 1 **OR** LT 2 indicator is illuminated:

☐ 5.9.2.1 Open 108

☐ 5.9.2.2 Turn on 110 (sump pump).

☐ 5.9.2.3 **WHEN** both LT1 and LT2 are out, close 108.

☐ 5.9.2.4 Turn off 110 (sump pump).

5.9.3 **IF** given the direction to flush the panel, flush the 500 mL liquid tank, pH housing, and sample injection valves as follows:

500 mL Liquid Tank

☐ 5.9.3.1 Open 101

☐ 5.9.3.2 Open 104

☐ 5.9.3.3 Open 401

☐ 5.9.3.4 Open PB 6 (3DW-278, DW Flush Supply to Post Accident Sample)

pH Housing

☐ 5.9.3.5 Open 102

☐ 5.9.3.6 Open 105

Sample Injection Valves

☐ 5.9.3.7 Open 107

☐ 5.9.3.8 Open 402

☐ 5.9.3.9 Flush the sample panel until the general area dose rate on the exterior of the panel is ≤ 2 mR/hr **OR** a satisfactory level is achieved per RP.

☐ 5.9.3.10 Close 402

☐ 5.9.3.11 Close 107

☐ 5.9.3.12 Close 105

☐ 5.9.3.13 Close 102

☐ 5.9.3.14 Close 101

☐ 5.9.3.15 Close 104

☐ 5.9.3.16 Close 401

☐ 5.9.3.17 Close PB 6 (3DW-278, DW Flush Supply to Post Accident Sample)

5.10 Liquid & Gas Sample Retrieval (PALSS Control Panel)

Liquid Sample Retrieval

☐ 5.10.1 Ensure open the waste route selected in Step 5.2.11 or 5.2.12:

- PB 1 (3LP-130, HAWT Return)

OR • PB 2 (3LP-121, 3B Emerg Sump Line Drn Blk).

☐ 5.10.2 Ensure closed all other PB valves (motor operated).

☐ 5.10.3 **IF** LT 1 **OR** LT 2 is illuminated, perform Step 5.9.1.

☐ 5.10.4 Select the flow path for sample collection by turning CV 612 to the desired injection valve (0.1 mL, 1 mL, or 5 mL loop).

Sample Loop(s) Selected _____

☐ 5.10.5 Slowly turn CV 613 to the "N_2" position.

☐ 5.10.6 After collecting approximately 15 mLs of liquid sample, turn CV 613 to the "VENT" position.

☐ 5.10.7 Wait ≥ 10 seconds for sample line depressurization.

☐ 5.10.8 Turn CV 612 to the "OFF" position.

☐ 5.10.9 As necessary for additional sample(s), repeat Steps 5.10.3 through 5.10.7.

Gas Sample Retrieval

☐ 5.10.10 **WHEN** possible, use the gas-tight syringe(s) to retrieve the gas sample(s) from the 30 mL gas tank keeping syringe vertical (needle down).

☐ 5.10.11 **IF** possible, place syringes in the gas locked position and store vertically (needle down).

5.11 30 mL Gas Tank and 500 mL Gas Tank Purge (PALSS Control Panel)

☐ 5.11.1 Verify Nitrogen supply still has ≥ 100 psig delivery pressure.

5.11.2 Allow all of the following valves to stay open ≥ 2 minutes except alternate the valve pairs 204/206 and 205/207 open and close within the 2 minute period:

☐ 5.11.2.1 Open 202

☐ 5.11.2.2 Open 204

☐ 5.11.2.3 Open 205

☐ 5.11.2.4 Open 206

☐ 5.11.2.5 Open 207

☐ 5.11.2.6 Open 103

☐ 5.11.2.7 Open 104

☐ 5.11.2.8 Open 401

☐ 5.11.2.9 After flushing for several seconds, close the following:

A. 204

B. 206

☐ 5.11.2.10 After additional flush for several seconds, open the following:

A. 204

B. 206

☐ 5.11.2.11 Close 205

☐ 5.11.2.12 Close 207

☐ 5.11.2.13 After several seconds, open the following:

A. 205

B. 207

☐ 5.11.2.14 **IF** the valves need further cycling (it has not been ≥ 2 minutes) return to Step 5.11.2.10.

☐ 5.11.2.15 **IF** the time is ≥ 2 minutes, proceed to Step 5.11.3.

☐ 5.11.3 Close 202

☐ 5.11.4 Close 401

☐ 5.11.5 Close 104

☐ 5.11.6 Close 103

☐ 5.11.7 Open 201

☐ 5.11.8 Open 208

5.11.9 After ≥ 10 seconds, close the following:

☐ 5.11.9.1 206

☐ 5.11.9.2 207

☐ 5.11.9.3 204

☐ 5.11.9.4 205

☐ 5.11.9.5 201

☐ 5.11.9.6 208

☐ 5.11.10 Repeat Step 5.11.2 through 5.11.9 until dose rates of 30 mL and 500 mL tank are ≤ 10 mR/hr (at contact) **OR** a satisfactory level is achieved per RP.

5.12 System Shutdown

5.12.1 Ensure closed the following motor operated valves: (PALSS Control Panel)

☐ PB 1 (3LP-130, HAWT Return)

☐ PB 2 (3LP-121, 1B Emerg Sump Line Drn Blk)

☐ PB 3 (3LP-126, DH Cooler Sample)

☐ PB 4 (3RC-179, Post Accident Sample Block)

☐ PB 5 (3LP-124, Letdown Sample Stop)

☐ PB 6 (3DW-278, DW Flush Supply to Post Accident Sample)

☐ PB 8 (3LP-129, PALS Inlet Strainer Drain)

5.12.2 Ensure closed the following solenoid valves: (PALSS Control Panel)

☐ 201

☐ 202

☐ 203

☐ 204

☐ 205

☐ 206

☐ 207

☐ 208

☐ 209

5.12.3 Ensure closed the following control valves: (PALSS Control Panel)

- ☐ 101
- ☐ 102
- ☐ 103
- ☐ 104
- ☐ 105
- ☐ 106
- ☐ 107
- ☐ 108

_____ 5.12.4 Return the valve power switch, SW 1, to the "OFF" position.

_____ 5.12.5 Return the key switch, KS 1, to the "OFF" position.

_____ 5.12.6 Close 3IA-2423 (IA to Post Accident Sample Panel) (Outside the PALSS Sample Panel)

_____ 5.12.7 Ensure N_2 cylinder discharge pressure > 600 psi.

- **IF** necessary, replace cylinder.

_____ 5.12.8 Close N_2 Supply Bottle valves (Outside the PALSS Sample Panel)

NOTE: The following cable connections are located between the PALSS Control Panel and the cable junction box.

CAUTION: Make the disconnection of connector cable 1 from the Junction Box the FIRST cable disconnection. **IF** this is not done first, the exposed pins of the other cables may become energized and become an electrical hazard.

☐ 5.12.9 **IF** directed by Chemistry Staff, disconnect the following cables in order:

Staff notified _____ Check below as directed by Staff.

☐ Leave the power cables connected.

☐ Disconnect the power cables connected.

☐ 5.12.9.1 CON-1 from the junction box (this is the first cable disconnect made), then from the PALSS Control Panel.

☐ 5.12.9.2 CON-2 cable at both ends.

☐ 5.12.9.3 CON-3 cable at both ends.

☐ 5.12.9.4 CON-4 cable at both ends.

☐ 5.12.9.5 CON-5 cable at both ends.

☐ 5.12.9.6 CON-6 cable at both ends.

☐ 5.12.10 Store the control panel in the AB 1st floor hallway/corridor within ten (10) feet from the Unit 1 electrical junction box.

☐ 5.12.11 Ensure the control panel wheels are locked to prevent panel movement.

☐ 5.12.12 Ensure CV 609 is in the "AIR" position.

☐ 5.12.13 Ensure CV 610 is in the "NITROGEN" position.

☐ 5.12.14 Inform the OSC that flushing of the PALSS Panel has been completed.

OSC Person Notified: _____

5.13 Sample Analysis

NOTE:	Steps 5.13.1 - 5.13.3 can be performed in any order. Substeps must be performed in the order written.

5.13.1 Gas (Nitrogen Stripping Method)

5.13.1.1 Analyze up to four syringes of stripped gas using LM-O-P008 (The Determination of Hydrogen in Gas Samples using the Carle Gas Chromatograph and the Spectra Physics Integrator).

5.13.1.2 Use the following formula to calculate results:

$$\% H_2 \frac{615.72 \text{ cc}}{0.50 \text{ Kg}} \times \frac{1}{100} = \text{cc/Kg } H_2$$

Where: % H_2 is determined from LM-O-P008

615.72 cc = 30 mL gas bomb + 500 mL gas bomb + tubing volume (volume occupied by sample gas).

0.50 Kg = collected sample size

$\frac{1}{100}$ = conversion of percent to decimal

5.13.1.3 Record results in cc/kg H_2 on Enclosure 7.7.

5.13.1.4 **IF** needed, reserve other stripped gas syringes for use as backups **OR** to perform a gas sample gamma spectra.

5.13.2 Liquid

5.13.2.1 Submit sample to count room for gamma spectra analysis. The sample may be counted in the rheodyne sample vial using the loop volume (preferred) or in a 50 mL bottle. **IF** a 50 mL bottle is used, refer to the following table for preparation guidelines:

PALSS Loop Size	Gamma Spectra Volume Ratio	Dilute sample from PALSS with demin. to: (mLs)	mLs of diluted sample to dilute to 50 mLs for gamma spectra analysis
5.24	5/45	50	(50/5.24)*5 or ~ 48
5.24	1/49	100	(100/5.24)*1 or ~19
1.04	1/49	50	(50/1.04)*1 or ~48
1.04	.5/49.5	100	(100/1.04)*0.5 or ~48
0.10058	.1/49.9	50	(50/0.10058)*0.1 or ~50

5.13.2.2 Record results in mCi/mL on Enclosure 7.7 and attach GeLi Spectra.

5.13.2.3 Analyze PALSS sample for boron.

- To obtain a boron concentration that will correlate directly with the normal RCS, the dilution factor must be multiplied by the analyzed sample concentration (obtained from the Boron Titration).

$$\text{ppm B} = \text{measured ppm B} \times \frac{\text{Total dilution volume (sample loop + dilution water), mLs}}{\text{sample loop volume, mLs}}$$

5.13.2.4 Record results of boron sample analysis on Enclosure 7.7.

5.13.2.5 Perform a chloride analysis of the sample.

- To obtain a Cl concentration that will correlate directly with the normal RCS, the dilution factor must be multiplied by the analyzed sample concentration.

$$\text{ppb Cl} = \text{measured ppb Cl} \times \frac{\text{Total dilution volume (sample loop + dilution water), mLs}}{\text{sample loop volume, mLs}}$$

NOTE:	**IF** the Cl results are below the Limit of detection (LOD) for the Cl analysis, multiply the LOQ by the dilution factor for reporting purposes (record as "< LOQ * dilution factor" instead of "T0").

5.13.2.6 Record results on Enclosure 7.7.

5.13.2.7 **IF** needed, reserve any remaining liquid sample for use as a backup.

5.13.3 **IF** approved by OSC & RP, prepare Panel for next use by performing the following: (PALSS Sample Panel)

- Fill buffer tanks(s) with ~ 600 mLs of buffer solution for calibrating the pH meter.
  - This solution will be pressurized with nitrogen gas to at least 60 psig using the nitrogen purge system inside the PALSS sample panel.
  - Connect tank(s) to quick connect fittings inside sample panel.

NOTE:	1. Always fill Buffer Tank A with a pH 7 buffer. Buffer Tank B should be filled with a pH 4 buffer if expected pH < 7.0 **OR** a pH 10 buffer if expected pH > 7.0. 2. Buffer tanks may be pre-prepared and stored inside of PALSS sample panel. Verify that buffer expiration dates have not been exceeded.

- Fill the 50 mL sample flush cylinder with demineralized water for flushing the liquid sample from the Rheodyne sample injection valves.
  - While holding in a vertical position, attach the matching quick disconnects and fill the cylinder from the bottom to the top using demineralized water.
  - Connect to sample shelf inside sample panel.
- Replace Gas Bomb Septa.

5.13.4 Ensure all data is recorded and Enclosure 7.7 is complete.

5.13.5 Route this procedure along with the gamma spectra(s) to the OSC.

6. References

6.1 NUREG-0737, Section II.B.3

6.2 DPC System Radiation Protection Manual

6.3 Post Accident Liquid Sampling System Manual, Production Support Department, OM-311C-0331

6.4 ASTM Volume 11.01, D-1293-84 (1990)

6.5 DPC LM/O/P008

6.6 DPC LM/O/P004

6.7 ITS 5.5.4

7. Enclosures

7.1 Valve Arrangement Diagram (Control Panel)

7.2 Valve Arrangement Diagram (General - One Line)

7.3 PALSS Inlet Filter/Strainer Back Flush Procedure

7.4 Calculation of Hydrogen Concentration Using the Ideal Gas Law (Differential Pressure)

7.5 Unit 3 PALSS Power Supply

7.6 Operations Checklist for Unit 3 PALSS Operating Procedure Valve Lineups to Route Reactor Coolant to the PALSS/Waste to the RBES

7.7 PALSS Authorization for Operation and Data Transmittal Form

7.8 Operating the Analyzer/Controller

Enclosure 7.1

Valve Arrangement Diagram
(Control Panel)

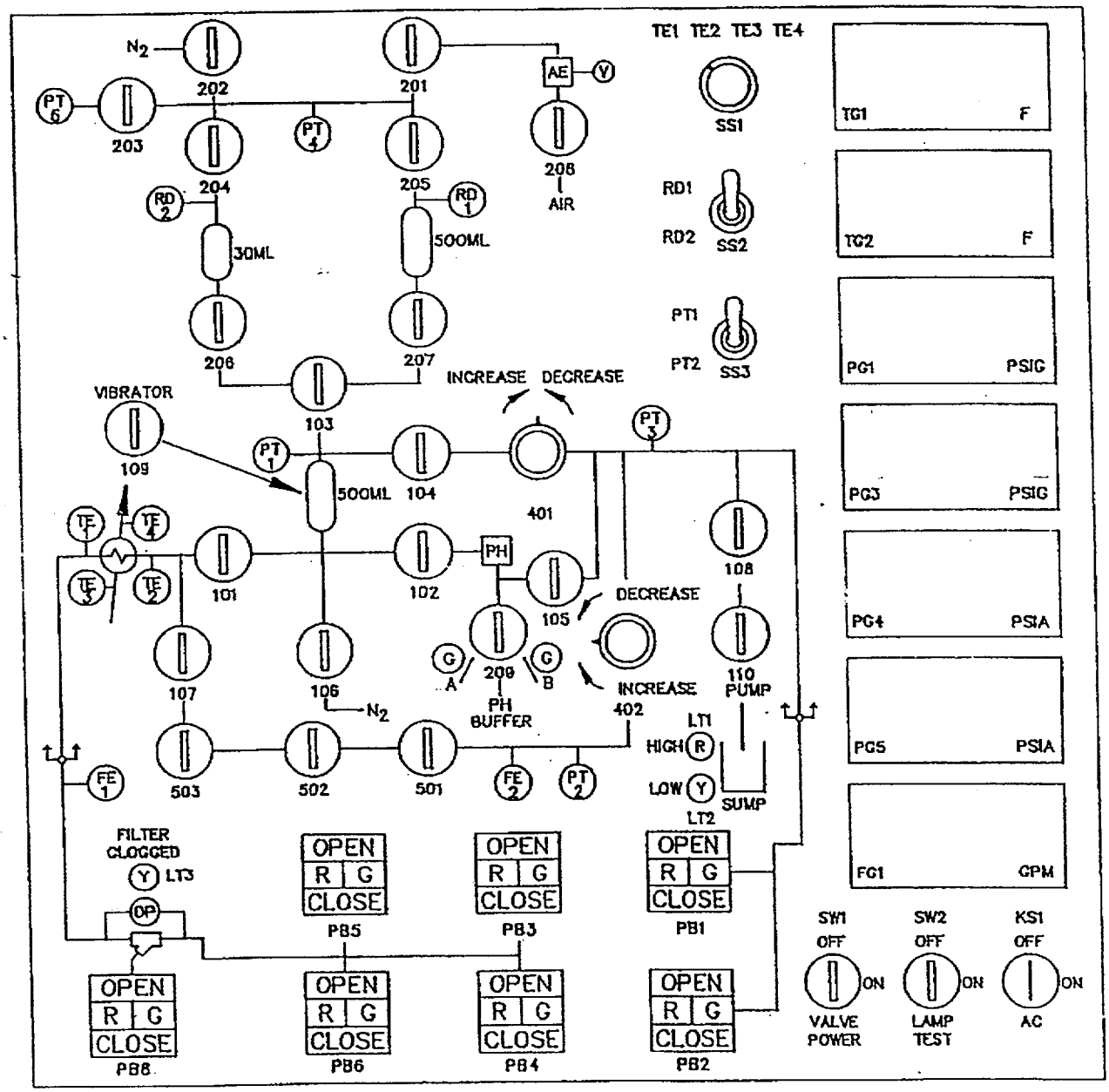

Enclosure 7.2

Valve Arrangement Diagram (General - One Line)

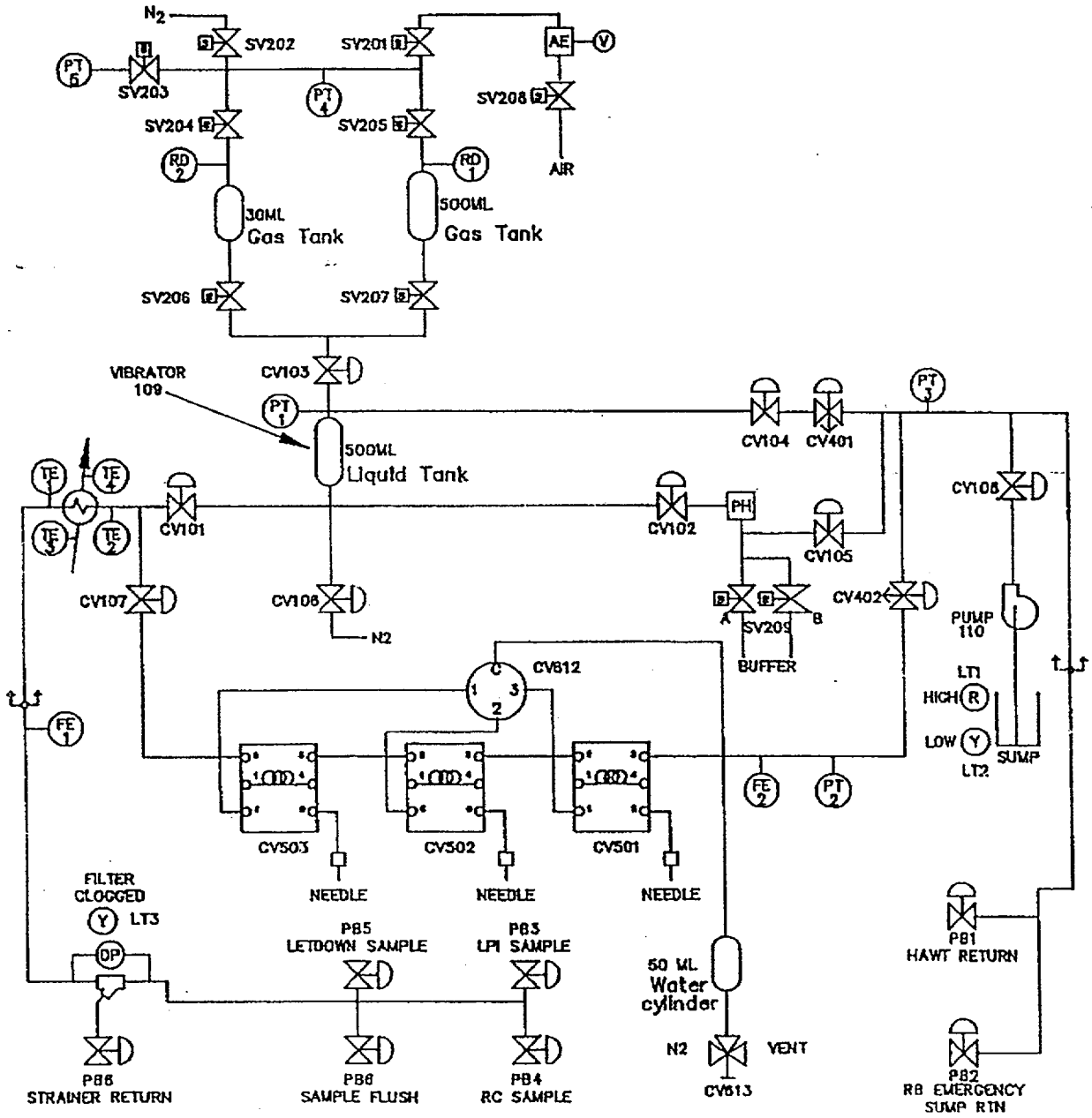

PALSS Inlet Filter/Strainer
Back Flush Procedure

1. Purpose

This enclosure gives instructions for back flushing the PALSS inlet filter/strainer.

2. Limits and Precautions

☐ The following RCS sample valves must be closed to prevent contamination of the demineralized water header with reactor coolant: (PALSS Control Panel)

- PB 5 (3LP-124, Letdown Sample Stop)
- PB 3 (3LP-126, DH Cooler Sample)
- PB4 (3RC-179, Post Accident Sample Block)

3. Procedure (PALSS Control Panel)

☐ 3.1 Ensure closed PB 5 (3LP-124, Letdown Sample Stop).

☐ 3.2 Ensure closed PB 3 (3LP-126, DH Cooler Sample).

☐ 3.3 Ensure closed PB 4 (3RC-179, Post Accident Sample Block).

☐ 3.4 After ≥ 30 seconds, close 104.

☐ 3.5 Ensure SS 3 (selector switch) is in the "PT-1" position.

☐ 3.6 Monitor pressure on PG-1 for one minute.

☐ 3.6.1 **IF** the pressure on PG-1 > 60 psi **OR** is increasing with time, immediately contact Chemistry Staff and notify the RCS may be leaking by PB 5 (3LP-124, Letdown Sample Stop), PB 3 (3LP-126, DH Cooler Sample) **OR** PB 4 (3RC-179, Post Accident Sample Block).

- Do **NOT** proceed without Staff approval.

☐ 3.7 Close 101

☐ 3.8 Open PB 8 (3LP-129, PALS Inlet Strainer Drain)

☐ 3.9 Open PB 6 (3DW-278, DW Flush Supply to Post Accident Sample)

☐ 3.10 Backflush ≥ 5 minutes, then close:

☐ 3.10.1 PB 6 (3DW-278, DW Flush Supply to Post Accident Sample)

☐ 3.10.2 PB 8 (3LP-129, PALS Inlet Strainer Drain)

☐ 3.11 **IF** the purpose is to resume sampling, open:

- PB 5 (3LP-124, Letdown Sample Stop)

OR • PB 3 (3LP-126, DH Cooler Sample)

OR • PB 4 (3RC-179, Post Accident Sample Block)

☐ 3.11.1 Open 104

☐ 3.11.2 Open 101

☐ 3.11.3 Return to procedural step allowing completion of the sampling process.

3.12 **IF** the clogged filter light is still "ON" and no flow is shown on FG 1, stop sampling.

3.13 Notify Chemistry Staff.

Staff Notified: _____

Enclosure 7.4

Calculation of Hydrogen Concentration Using the Ideal Gas Law (Differential Pressure)

1. Purpose

This enclosure provides guidance on calculations for hydrogen using Ideal Gas Laws.

2. Limits and Precautions

N/A

3. Procedure

3.1 Record the initial and final temperature and pressure readings from Steps 5.7.6.4 and 5.7.6.8.

Initial Temperature Reading _____°F

Final Temperature Reading _____°F

Initial Pressure Reading _____ PSIA

Final Pressure Reading _____ PSIA

3.2 Calculate the average gas temperature reading using the following equation:

$$T_{avg} = (T_{final} + T_{init})/2$$

where, T_{avg} = Average Gas Temperature, °C

T_{final} = Final Gas Temperature Reading, °C

T_{init} = Initial Gas Temperature Reading, °C

3.3 Calculate the differential gas pressure using the following equation:

$$P_{diff} = P_{final} - P_{init}$$

where, P_{diff} = Differential Gas Pressure, PSI

P_{final} = Final Gas Pressure Reading, PSIA

P_{init} = Initial Gas Pressure Reading, PSIA

Calculation of Hydrogen Concentration Using the Ideal Gas Law (Differential Pressure)

3.4 Calculate the hydrogen concentration of the trapped PALSS gas sample using the following equation:

$$H_2 = \frac{(3{,}719.83)(P_{diff})}{(T_{avg} + 273)} + \frac{(P_{final} - 0.69)}{0.769}$$

(H_2 in Gas Sample) (H_2 remaining in Liquid Sample)

where, H_2 = PALSS gas sample Hydrogen Concentration, cc/Kg

3.5 Record hydrogen concentration result from Step 3.4 above on Enclosure 7.7.

Enclosure 7.5

Unit 3 PALSS Power Supply

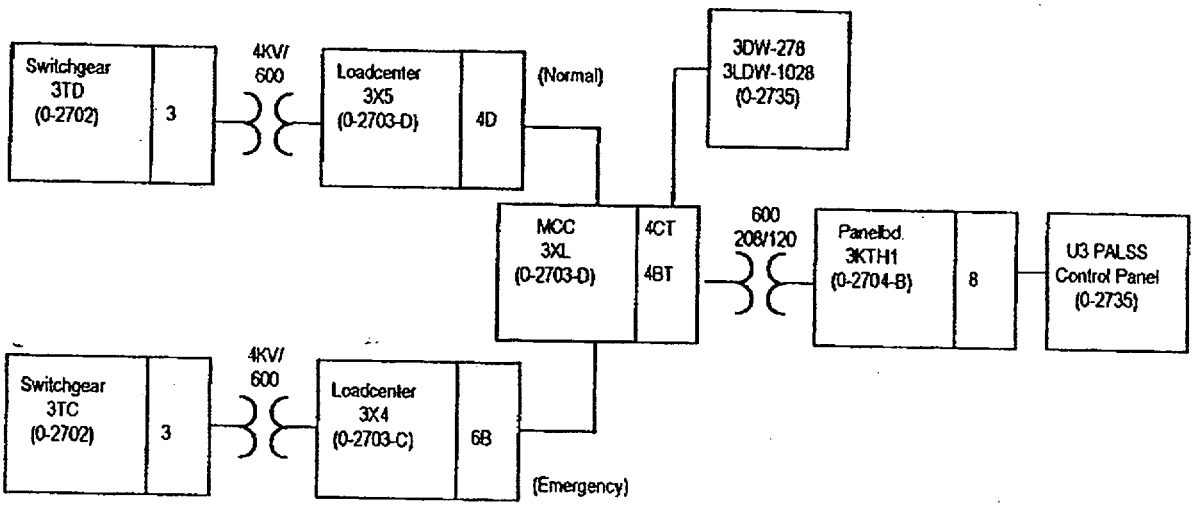

Operations Checklist for Unit 3 PALSS Operating Procedure Valve Lineups to Route Reactor Coolant to the PALSS/Waste to the RBES

1. Purpose

This enclosure gives the valve lineups needed for routing reactor coolant from the RCS "J" Leg through the PALSS to the RBES.

2. Limits and Precautions

☐ 2.1 Demineralized water header should be in service and have at least 60 psi pressure. RCW (sample cooling supply) should also be in service.

3. Procedure

3.1 Establish communications with Chemistry personnel assigned to the task.

Chemistry personnel assigned: _____

> **CAUTION:** **IF** containment integrity is required or is to be considered, station personnel in constant communication with the Control Room in the vicinity of 3LP-65 ('3B' Emer Sump Line Drain Block) to immediately close 3LP-65 **IF** ES actuation occurs.

_____ DV _____ 3.2 Open 3LP-65 ('3B' Emerg Sump Line Drn Blk) (Unit 3 LPI Room) manual valve to be operated by reach rod from LPI Hatch Room 159 (on west wall).

_____ 3.3 Record valve is open in OP/0/A/1102/020 (Shift Turnover).

3.4 Establish flow to the PALSS panel via the RCS "J" Leg as follows:

3.4.1 **IF** containment integrity is required or is being considered, assign an Operator to close 3RC-162, 3RC-163, 3RC-164, and 3RC-165 in case of an ES Actuation.

_____ DV _____ 3.4.2 Open 3RC-162 (RC Sample Vlv 3RC-162 (Solenoid Vlv)). (inside RB, operated from Control Room)

_____ DV _____ 3.4.3 Open 3RC-163 (PALS (Pene #5B) Sample Line Blk). (inside RB, operated from Control Room)

_____ DV _____ 3.4.4 Open 3RC-164 (Post Accident Liq Sample (PALS) Valve). (Unit 3 LPI Room, operated by reach rod, LPI Hatch, Rm. 159 on SW wall next to spiral stairs)

Operations Checklist for Unit 3 PALSS Operating Procedure Valve Lineups to Route Reactor Coolant to the PALSS/Waste to the RBES

_____ DV _____ 3.4.5 Open 3RC-165 (Post Accident Sample Valve). (Unit 3 LPI Room, operated by reach rod, LPI Hatch, Rm. 159 on SW wall next to spiral stairs)

_____ 3.4.6 Record 3RC-164 (Post Accident Liq Sample (PALS) Valve) and 3RC-165 (Post Accident Sample Valve) are open in OP/0/A/1102/020 (Shift Turnover).

3.5 Chemistry will notify Operations when the RCS sample has been obtained

Operations notified: _____

3.6 Chemistry will ask Operations to close the following valves.

_____ DV _____ 3.6.1 3RC-165 (Post Accident Sample Valve). (Unit 3 LPI Room, operated by reach rod, LPI Hatch, Rm. 159 on SW wall next to spiral stairs)

_____ DV _____ 3.6.2 3RC-164 (Post Accident Liq Sample (PALS) Valve). (Unit 3 LPI Room, operated by reach rod, LPI Hatch, Rm. 159 on SW wall next to spiral stairs)

_____ DV _____ 3.6.3 3RC-163 (PALS (Pene #5B) Sample Line Blk). (Reactor Building)

_____ DV _____ 3.6.4 3RC-162 (RC Sample Vlv 3RC-162 (Solenoid Vlv)). (Reactor Building)

_____ 3.6.5 Record containment isolation valves 3RC-164 (Post Accident Liq Sample (PALS) Valve) and 3RC-165 (Post Accident Sample Valve) are closed in OP/0/A/1102/020 (Shift Turnover).

_____ 3.7 Close 3LP-65 ('3B' Emerg Sump Line Drn Blk). (Unit 3 LPI Room, manual valve to be operated by reach rod from LPI Hatch, Rm. 159 (on west wall))

3.8 Record that 3LP-65 ('3B' Emerg Sump Line Drn Blk) is closed in OP/0/A/1102/020 (Shift Turnover).

3.9 Ensure completed enclosure is maintained by Chemistry.

Enclosure 7.7

PALSS Authorization for Operation and Data Transmittal Form

Date _____

_____ **1. Verbal/written direction for sampling the Reactor Coolant via the PALSS has been received from the TSC/OSC.**

Sample Point: RCS "J-Leg" _____ Waste Route: RBES _____

LPI Pump Discharge_____ HAWT _____

HPI Letdown _____

Person Authorizing Sampling _____

_____ **2. The specific post-accident analysis requested by TSC/OSC:**

____ Boron = _____ppm

____ Hydrogen = _____cc/kg

____ Chloride = _____ppm

____ pH = _____

____ Gas Gamma (attach)

____ Liquid Gamma (attach)

____ Other (specify) _____

3. Have RP determine general area dose rate at the PALS valve panel and record below.

Dose rate (general area) = _____ r/hr

_____ **4. Determine by detailed planning meeting the exact course of action and data required.**

_____ **5. Evaluate the use of portable shielding, remove handling equipment, video equipment, etc., to minimize the exposure to personnel while sampling.**

_____ **6. Have RP determine the required respiratory equipment and protective clothing to prevent or minimize internal exposure in any Planned Emergency situation. Use high range and/or extremity dosimetry if required.**

_____ **7. Determine how long to flush the PALSS sample panel, based on general area dose readings.**

_____ **8. Request RP to designate a route from PALSS to the Lab.**

Sample route designated:_____

_____

9. Evaluate the use of portable shielding, remove handling equipment, video equipment, etc., to minimize the exposure to personnel in the Lab for the required analyses.

Front panel keys used for all operator tasks

Table 1-1 Key Functions

Key	Name	Use
	DISPLAY	**When process values are on display:** Use **DISPLAY** to cycle through available real-time displays. **When the main menu (Configuration, Calibration, Maintenance, I/O Setup) is on display:** Use **DISPLAY** to return to displaying process values.
	MENU	**When process values are on display:** Use **MENU** to access the menus. If the security feature is enabled, the display will prompt for entry of the password before access to the menus is permitted. (Enter the password using the procedure for editing a parameter numeric value as described on the next page.) **When any menu or configuration screen is on display:** Use **MENU** to go up a level in the display hierarchy. Frequently this means returning to the main menu.
	UP	**When a menu or configuration screen is on display:** Use **UP** to highlight a different item. **When changing a numerical value:** Use **UP** key to increment the value of the digit at the cursor.
	DOWN	**When a menu or configuration screen is on display:** Use **DOWN** to highlight a different item. **When changing a numerical value:** Use **DOWN** to decrement the value of the digit at the cursor.
	ENTER	**When a menu item is highlighted:** Use **ENTER** to select it. **When editing a parameter:** Use **ENTER** to save the new value.
F1	F1, F2, F3 [function keys]	**When a "soft key" label is displayed below the alarm stripe:** Use the function key directly below the label to perform the action.