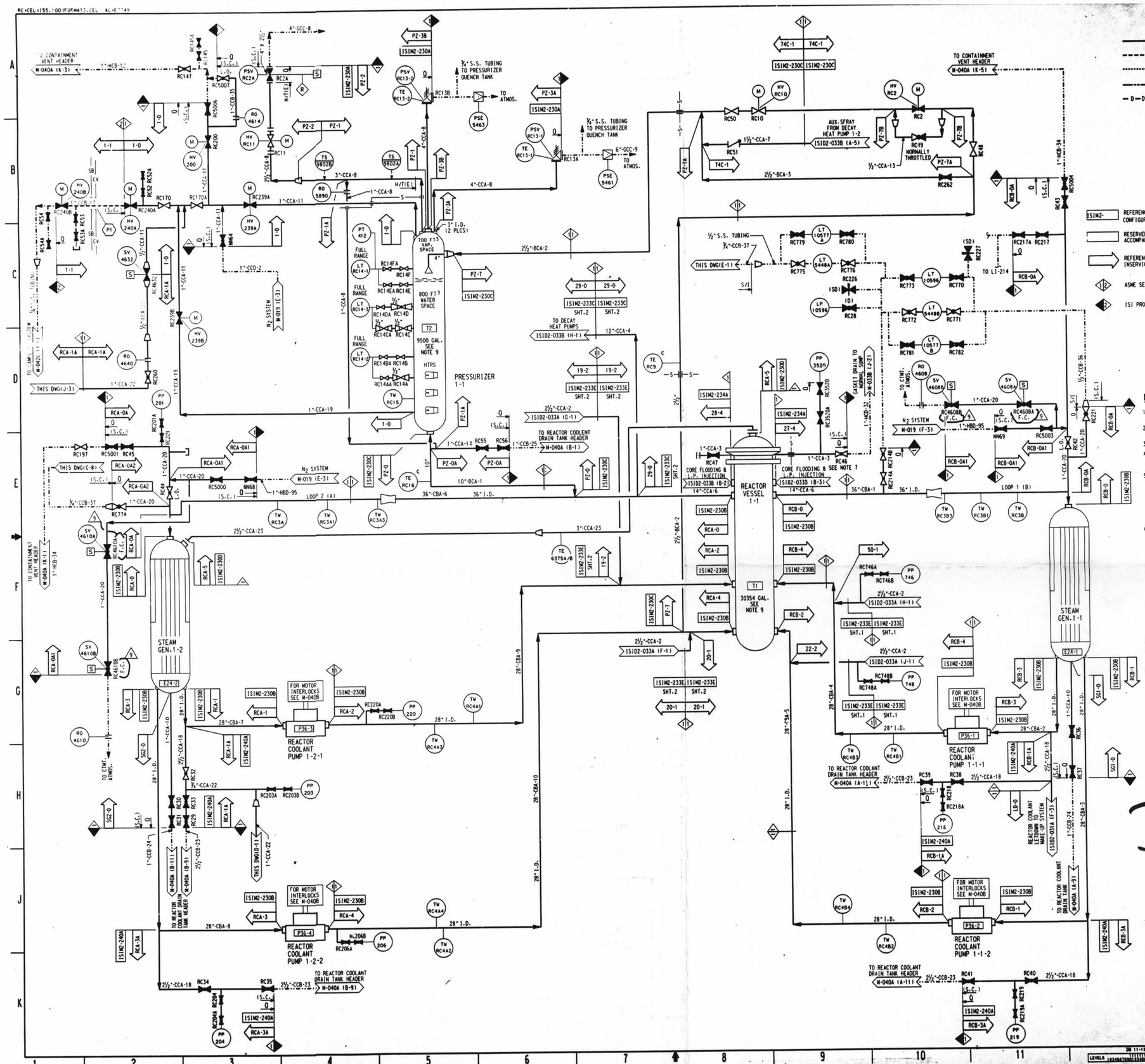

LEGEND

- ASME SECTION XI CLASS 1 PIPING (RED)
- ASME SECTION XI CLASS 2 PIPING (BLUE)
- ASME SECTION XI CLASS 3 PIPING (GREEN)
- REFERENCE 8 CONTINUITY
- —D—D— HVAC DUCT

ISIM2- REFERENCE TO THE PIPING ISOMETRIC DRAWING FOR DETAILS ON THE PIPING CONFIGURATION, AND THE LOCATION AND IDENTIFICATION OF WELDS AND SUPPORTS.

RESERVED FOR SPECIAL ISI REQUIREMENTS. (MAY BE) ACCOMPANIED BY SPECIFIC NOTES.

REFERENCE TO THE ISI ITEM NUMBER DESIGNATION USED IN THE FIRST 10 YEAR INSERVICE INSPECTION INTERVAL.

ASME SECTION XI CLASS CHANGE

ISI PROGRAM BOUNDARY

NOTES:

1. DELETED
2. FOR ISI BOUNDARY DIAGRAM INDEX SHEET AND GENERAL NOTES, SEE ISID2-001.
3. FOR PIPING SYMBOLS AND P & ID INDEX, SEE DRAWING M-001.
4. UNLESS OTHERWISE NOTED, ALL VENT CONNECTIONS ARE ¾" AND DRAIN CONNECTIONS ARE 1". LINE IDENTIFICATION IS THE SAME AS THE HEADER.
5. FOR ISI PURPOSES ONLY THE CLASS I PIPING SYSTEMS SUPPLIED BY B & W HAVE BEEN ASSIGNED THE FOLLOWING LINE DESIGNATIONS WHICH ARE SIMILAR TO BUT ARE NOT TO BE CONFUSED WITH M601/M602 DESIGNATIONS:
   36"-CBA-1,6
   28"-CBA-2 TO 5,7 TO 10
   10"-BCA-1
   2½"-BCA-2 & 3
6. THE FOLLOWING LINE NUMBERS ARE ASSOCIATED WITH THE TE-ITEM NUMBERS LISTED:

LINE NO.	TE ITEM NO.
36" CBA-1	RCB-0
28"-CBA-2	RCB-3
28"-CBA-3	RCB-1
28"-CBA-4	RCB-4
28"-CBA-5	RCB-2
36"-CBA-6	RCA-0
28"-CBA-7	RCA-1
28"-CBA-8	RCA-3
28"-CBA-9	RCA-2
28"-CBA-10	RCA-4
10"-BCA-1	PZ-0
2½"-BCA-2	PZ-7
2½"-BCA-3	PZ-7A

7. RC46 MAY BE CLOSED IF LEAKAGE EXISTS.
8. THE INSTRUMENTATION VALVES OFF THE REACTOR COOLANT SYSTEM PIPING ARE SHOWN ON P & ID M-030B. THE ISI CLASS 1 BOUNDARY EXTENDS TO THE SECOND VALVE OFF THE PIPING.
9. WHERE NOTED THE TANK CAPACITY IS NOMINAL, WHERE APPLICABLE, SEE DB-PF-06705 (TANK LEVEL CALIBRATION CURVES) FOR INDICATED LEVEL VS. VOLUME RELATIONSHIP. (REF. PCAOR 96-0976).

D-18

NO.	DATE	REVISIONS	BY	CH'K	ENGR.	ENGR. SUPV.	ENGR. MGR.
9	11/26/01	INC. DCN ISID2-30A-12 PER DDR 01-1685	SBW				
8	03/02/01	INC. DCN ISID2-30A-9 PER DDR 00-2285 (REF. RFA 00-0287)	INITIALS ON FILE				
7	08/21/00	INC. DCN ISID2-030A-8 PER DDR 00-1766	INITIALS ON FILE				
6	06/12/00	INC. DCN ISID2-030A-7 PER DCR 99-0001	INITIALS ON FILE				
5	7/14/97	INC. DCN ISID2-30A-6 PER DDR 97-0187	INITIALS ON FILE				
0	09/13/90	ISSUED FOR SECOND 10 YEAR ISI PROGRAM	JJK	TRN RJC	TWB	MGP	EEC

SCALE N.T.S. DESIGNED DRAWN CB DATE

DAVIS-BESSE NUCLEAR POWER STATION
UNIT NO. 1 Q
THE TOLEDO EDISON COMPANY

INSERVICE INSPECTION DIAGRAM
REACTOR COOLANT SYSTEM

DRAWING NO. ISID2-030A REV. 9

DB 11-13-01 DFN=I:/ISID/ISID2-030A.DGN

14 34X44 E SIZE

I CERTIFY THAT THE IMAGE CONTAINED ON THIS FRAME WAS MADE IN THE NORMAL OPERATION OF BUSINESS ON THE DATE STATED BELOW AND THAT IT IS AN ACCURATE AND PROPERLY TO SCALE IMAGE OF THE DOCUMENT OF RECORDS MANAGEMENT DAVIS-BESSE NPS

BY 11-21-01 OPERATOR: Dorly Wille

30X