Florida Power & Light Company, 6351 S. Ocean Drive, Jensen Beach, FL 34957

November 14, 2001

L-2001-257
10 CFR 50 Appendix E

U. S. Nuclear Regulatory Commission
Attn: Document Control Desk
Washington, D. C. 20555

Re: St. Lucie Units 1 and 2
Docket Nos. 50-335 and 50-389
Emergency Plan Implementing Procedure

In accordance with 10 CFR 50 Appendix E, enclosed is a copy of the revised procedure that implements the Emergency Plan as listed below.

Number	Title	Revision	Implementation Date
EPIP-03	Emergency Response Organization Notification/Staff Augmentation	8A	November 5, 2001

This revision changes President, Nuclear Division to Chief Nuclear Officer.

NRC Regulatory Issue Summary 2001-05 waived the requirements that multiple copies of documents be submitted to the NRC. Therefore, hard copies usually sent to the Regional Administrator and Senior Resident Inspector will no longer be furnished. Please contact us if there are any questions regarding this procedure.

Very truly yours,

Donald E. Jernigan
Vice President
St. Lucie Plant

DEJ/spt

Enclosure

A045

FPL	ST. LUCIE PLANT EMERGENCY PLAN IMPLEMENTING PROCEDURE SAFETY RELATED	Procedure No. **EPIP-03** Current Revision No. **8A** Effective Date **11/05/01**

Title:

EMERGENCY RESPONSE ORGANIZATION NOTIFICATION / STAFF AUGMENTATION

Responsible Department: **EMERGENCY PREPAREDNESS**

CONTROL 818 COPY
PROCEDURE PRODUCTION

REVISION SUMMARY:

Revision 8A - Changed President, Nuclear Division to Chief Nuclear Officer. (M. DiMarco, 10/22/01)

Revision 8 - Supported elimination of OSC paramedic position and made editorial and administrative changes. (G. Varnes, 08/08/00)

Revision 7 - Increased emphasis on callout process, changed callout sequence, added notes for emphasis, made administrative changes, and added autodialer checklist. (Donna Calabrese, 04/27/00)

Revision 6 - Removed reference to the rotating maintenance shift supervisor from the definition / description of the duty call supervisor and revised security title from supervisor to specialist. (J. R. Walker, 07/01/99)

Revision 5 - Transferred EP responsibilities from the Training Manager to the Protection Services Manager. Made editorial changes and added new position -regulatory affairs. (J. R. Walker, 06/17/99)

Revision 4 - Added 2 new positions to call tree to address Security org. and added editorial / administrative changes. (J. R. Walker, 2/23/99)

Revision	FRG Review Date	Approved By	Approval Date
0	12/15/97, 1/30/98	J. Scarola Plant General Manager	01/30/98
8A	08/08/00	R. G. West Plant General Manager	08/08/00
		N/A Designated Approver	
		G. A. Bird Designated Approver (Minor Correction)	10/22/01

S___OPS	
DATE	
DOCT	PROCEDURE
DOCN	EPIP-03
SYS	
COM	COMPLETED
ITM	8A

TABLE OF CONTENTS

SECTION PAGE

1.0 PURPOSE 3

2.0 REFERENCES / RECORDS REQUIRED / COMMITMENT DOCUMENTS ... 3

3.0 RESPONSIBILITIES 5

4.0 DEFINITIONS 6

5.0 INSTRUCTIONS 7

5.1 Emergency Coordinator (EC) 7
5.2 Duty Call Supervisor (DCS) 8
5.3 ERO Members with Call Tree Duties 11
5.4 ERO Members with no call-out duties 13

ATTACHMENTS

ATTACHMENT 1 EMERGENCY STAFFING CALL TREE 14

ATTACHMENT 2 FPL EMERGENCY RECALL SYSTEM (ERS) ACTIVATION CHECKLIST 25

1.0 PURPOSE

NOTE

§2 The Staff Augmentation process is an essential part of the Emergency Plan in that it puts in place the resources necessary to mitigate an accident and protect the health and safety of the public.

This procedure provides instructions to:

1.1 Activate the St. Lucie Plant Emergency Response Organization (ERO) for staff augmentation in response to an emergency declaration.

2.0 REFERENCES / RECORDS REQUIRED / COMMITMENT DOCUMENTS

NOTE

One or more of the following symbols may be used in this procedure:

§ Indicates a Regulatory commitment made by Technical Specifications, Condition of License, Audit, LER, Bulletin, Operating Experience, etc. and shall NOT be revised without Facility Review Group review and Plant General Manager approval.

¶ Indicates a management directive, vendor recommendation, plant practice or other non-regulatory commitment that should NOT be revised without consultation with the plant staff.

Ψ Indicates a step that requires a sign off on an attachment.

2.1 References

1. §1 St. Lucie Plant Radiological Emergency Plan (E-Plan)
2. E-Plan Implementing Procedures (EPIP 00 - 13)
3. HP-200, Health Physics Emergency Organization
4. AP 0010120, Conduct of Operations
5. ADM-15.04, Fitness For Duty - Call-Out and For Cause Testing
6. St. Lucie Plant Emergency Response Directory (ERD)
7. QI-17-PSL-1, Quality Assurance Records

/R8

2.2 Records Required

1. None

2.3 Commitment Documents

1. ¶1 CR 00-0544 - QA Audit QSL-EP-00-02: Discrepancies with Primary and Backup ERO Callout Processes /R8

3.0 RESPONSIBILITIES

3.1 The Emergency Coordinator (EC) has the overall responsibility for the notification and call-out of the ERO as provided for in EPIP-02, Duties and Responsibilities of the Emergency Coordinator.

3.2 The Duty Call Supervisor (DCS)

1. The Duty Call Supervisor reports to the affected Unit Control Room upon declaration of the emergency, If the unaffected Unit ANPS assumes the role of DCS, Then he / she shall fulfill the responsibilities without leaving the unaffected Control Room.

2. Complete the following as directed by the NPS / EC:

A. State Notification Form (EPIP-08).

B. Off-site notifications (EPIP-08).

C. Staff augmentation (per this procedure).

D. Operations Department Accountability Aid.

3. Conduct a turnover with the TSC OPS Coordinator (NPS Communicator in the Control Room) regarding the status of communications and other tasks underway.

3.3 Members of the Emergency Response Organization (ERO):

1. §1 Advise the Protection Services Manager when his / her duties are changed such that he / she can no longer participate in the ERO.

2. Maintain a copy of the ERD readily available 24 hours a day (individuals with call-out duties only).

3. Make notifications, as required by their position, when notified by the DCS, in accordance with the instructions contained in the ERD.

4. When notified, report to the assigned Emergency Response Facility (ERF).

/R8 /R8

3.4 Protection Services Manager

1. §1 Ensure verification of the following for ERO personnel quarterly:

A. Personnel phone / beeper numbers

B. Training qualifications in accordance with EPIP-12, Maintaining Emergency Preparedness, Radiological Emergency Plan Training.

3.5 ¶1 The Emergency Preparedness Supervisor is responsible to ensure that both primary and backup staff augmentation methodologies are adequately maintained. The requirements for maintaining the augmentation methodologies are detailed in EPIP-13, Maintaining Emergency Preparedness - Emergency Exercises, Drills, Tests and Evaluations. /R8

4.0 DEFINITIONS

4.1 Autodialer

See FPL Emergency Recall System below.

4.2 Duty Call Supervisor (DCS)

The Duty Call Supervisor is a specifically designated and trained supervisor responsible for assisting the Emergency Coordinator in making notifications and calls to the Emergency Response Organization.

4.3 Emergency Response Organization (ERO)

A trained group of personnel that are designated to perform specific duties during emergencies.

4.4 St. Lucie Plant Emergency Response Directory (ERD)

A printed directory which provides guidance for performing a call-out of the Emergency Response Organization. The ERD contains the names, positions, home phone numbers, and pager numbers for the members of the ERO.

4.5 FPL Emergency Recall System (ERS)

A computer-based automated call-out system used to activate the ERO. This system is also referred to as the "autodialer".

5.0 INSTRUCTIONS

5.1 Emergency Coordinator (EC)

1. Instructions for the EC are located in EPIP-02, Duties and Responsibilities of the Emergency Coordinator.

END OF SECTION 5.1

5.2 Duty Call Supervisor (DCS)

1. As directed by the EC, initiate call-out of ERO members using Attachment 2, FPL Emergency Recall System (ERS) Activation Checklist.

> **NOTE**
> Instructions for activation of the autodialer are located in the Duty Call Supervisor Notebook which is maintained in accordance with Appendix E to AP-0010120, Conduct of Operations.

2. If during normal working hours, Then activate autodialer only.

A. Do NOT call-out ERO members using the ERD.

3. If during off normal working hours, Then begin call-out of ERO members, as detailed in the ERD, after initiating the autodialer.

A. Notify Security Shift Specialist AND HP Shift Supervisor / On-shift Tech by plant radio or other prompt means.

B. Notify each of the following positions by cell / page / radio:

1. Emergency Coordinator

2. Recovery Manager

3. Nuclear Division Duty Officer

C. If autodialer has NOT activated, Then continue to notify the following:

1. TSC Chemistry Supervisor

2. TSC EP Coordinator

3. EP Manager

4. EOF Emergency Technical Manager

5. TSC Coordinator with OSC.

5.2 Duty Call Supervisor (DCS) (continued)

3. (continued)

NOTE

Read and review Steps 5.2.3.D.1 - 5.2.3.D.5 below and mark appropriately for an actual emergency call-out drill or phone test prior to making the first call.

D. When the responder answers, CLEARLY STATE THE FOLLOWING:

1. This is (your name), functioning as Duty Call Supervisor.

2. This is an / a (actual emergency / call-out drill / phone test) message.

3. St. Lucie Plant has declared an / a (ALERT / SITE AREA EMERGENCY / GENERAL EMERGENCY) **OR** is conducting a (call-out drill / phone test).

4. I am calling you for the position of (state position from Step 5.2.3 above).

a. Are you fit for duty and able to respond?

(If YES: record name on call-out list and continue with questions).

(If NO: Terminate the call and go to next person for the position.)

b. What is your estimated drive time to your emergency response facility?

(Record estimated arrival time under ETA on call-out list).

5. Promptly complete your call tree section if applicable and report to your emergency response facility.

OR

This is a phone test only, DO NOT report to your emergency response facility after completing your calls.

5.2 Duty Call Supervisor (DCS) (continued)

3. (continued)

E. If autodialer activation is indicated, Then NOTIFY Security Shift Specialist and HP Shift Supervisor / On-shift Tech to suspend call-out.

END OF SECTION 5.2

5.3 ERO Members with Call Tree Duties

1. Maintain a current copy of the ERD for use at all times.

2. Perform manual call-outs as instructed by the DCS and ERD.

A. Begin at the top of your call list and proceed down the list until either:

An individual is contacted to fill each position

OR

All positions have been attempted once.

NOTE

Read and review Steps 5.3.2.B.1 - 5.3.2.B.5 below and mark appropriately for an actual emergency, a call-out drill or phone test prior to making the first call.

B. When the responder answers, CLEARLY STATE THE FOLLOWING:

1. This is (your name), functioning as (ERO position title).

2. This is an / a (actual emergency / call-out drill / phone test) message.

3. St. Lucie Plant has declared an / a (ALERT / SITE AREA EMERGENCY / GENERAL EMERGENCY) **OR** is conducting a (call-out drill / phone test).

4. I am calling you for the position of (state position from ERD Call-out Phone List).

a. Are you fit for duty and able to respond?

(If YES: check name on call-out list and continue with questions).

(If NO: Terminate the call and go to next person for the position.)

5.3 ERO Members with Call Tree Duties (continued)

2. B. 4. (continued)

b. What is your estimated drive time to your emergency response facility?

(Record estimated arrival time under ETA on call-out list).

5. Promptly report to your emergency facility.

OR

This is a phone test only, DO NOT report to your emergency response facility.

C. Report to assigned emergency response facility upon completion of call-outs and furnish call-out data to facility manager.

If consumed alcohol in the past 5 hours, Then report to Security prior to entering the site or EOF.

END OF SECTION 5.3

5.4 ERO Members with no call-out duties

Report at once to your assigned emergency response facility.

If consumed alcohol in the past 5 hours, Then report to Security prior to entering the site or EOF.

END OF SECTION 5.4

ATTACHMENT 1
EMERGENCY STAFFING CALL TREE
(Page 1 of 11)

DUTY CALL SUPERVISOR

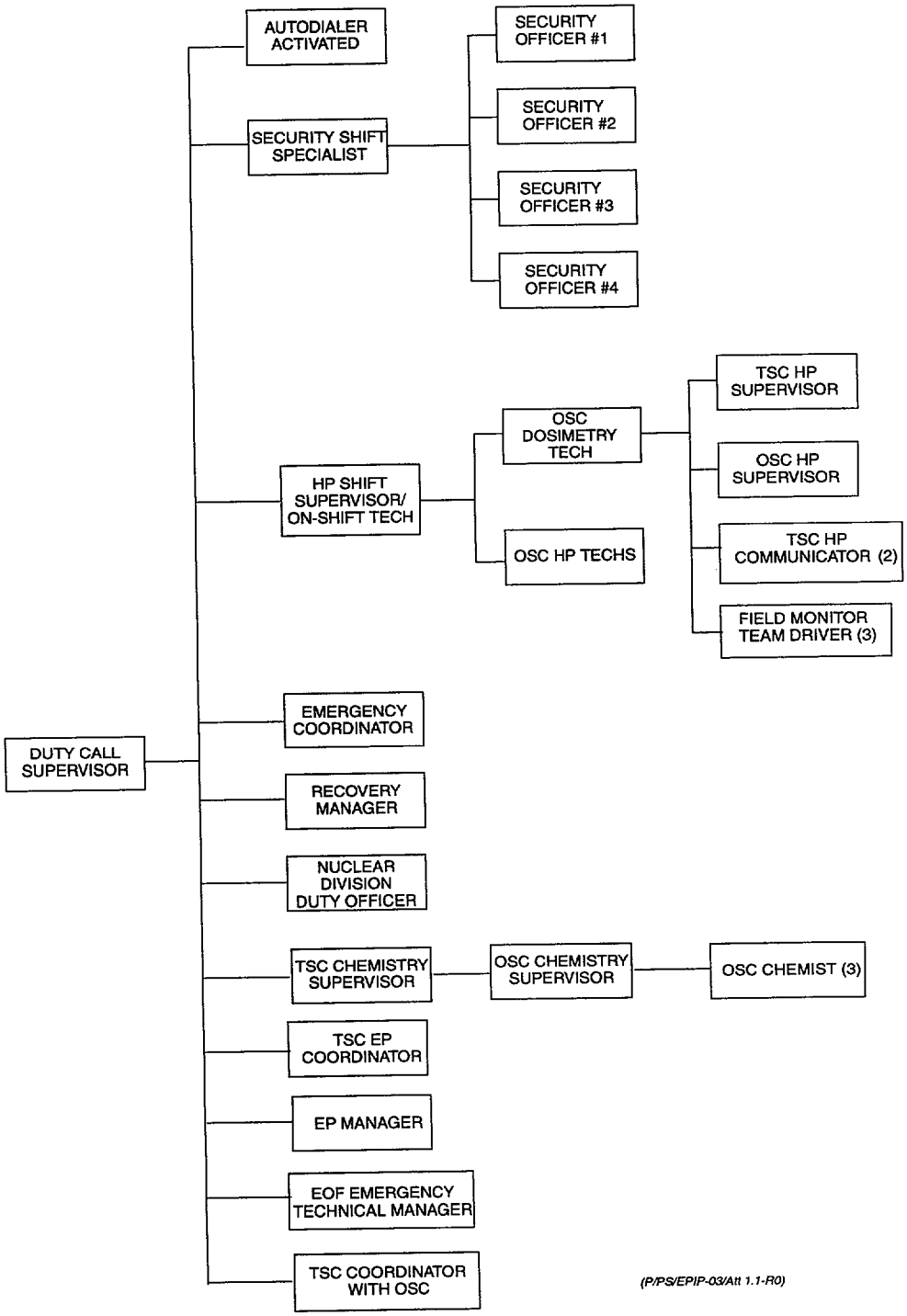

(P/PS/EPIP-03/Att 1.1-R0)

ATTACHMENT 1
EMERGENCY STAFFING CALL TREE
(Page 2 of 11)

SECURITY OFFICER #1

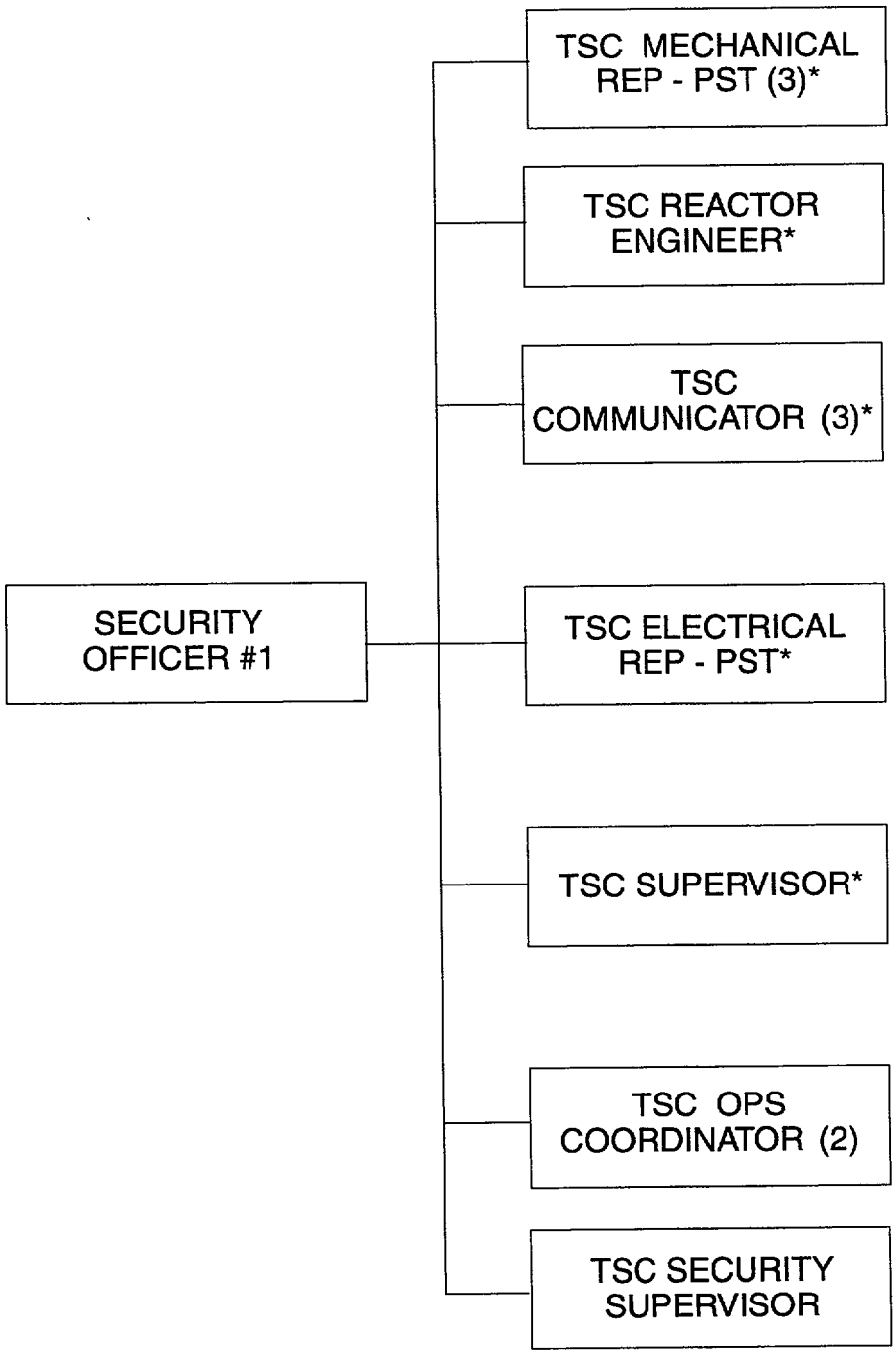

* MINIMUM STAFFING POSITION OR FIRST LINE ALTERNATE TO MINIMUM STAFFING POSITION

(P/PS/EPIP-03/Att 1.2-R0)

ATTACHMENT 1
EMERGENCY STAFFING CALL TREE
(Page 3 of 11)

SECURITY OFFICER #2

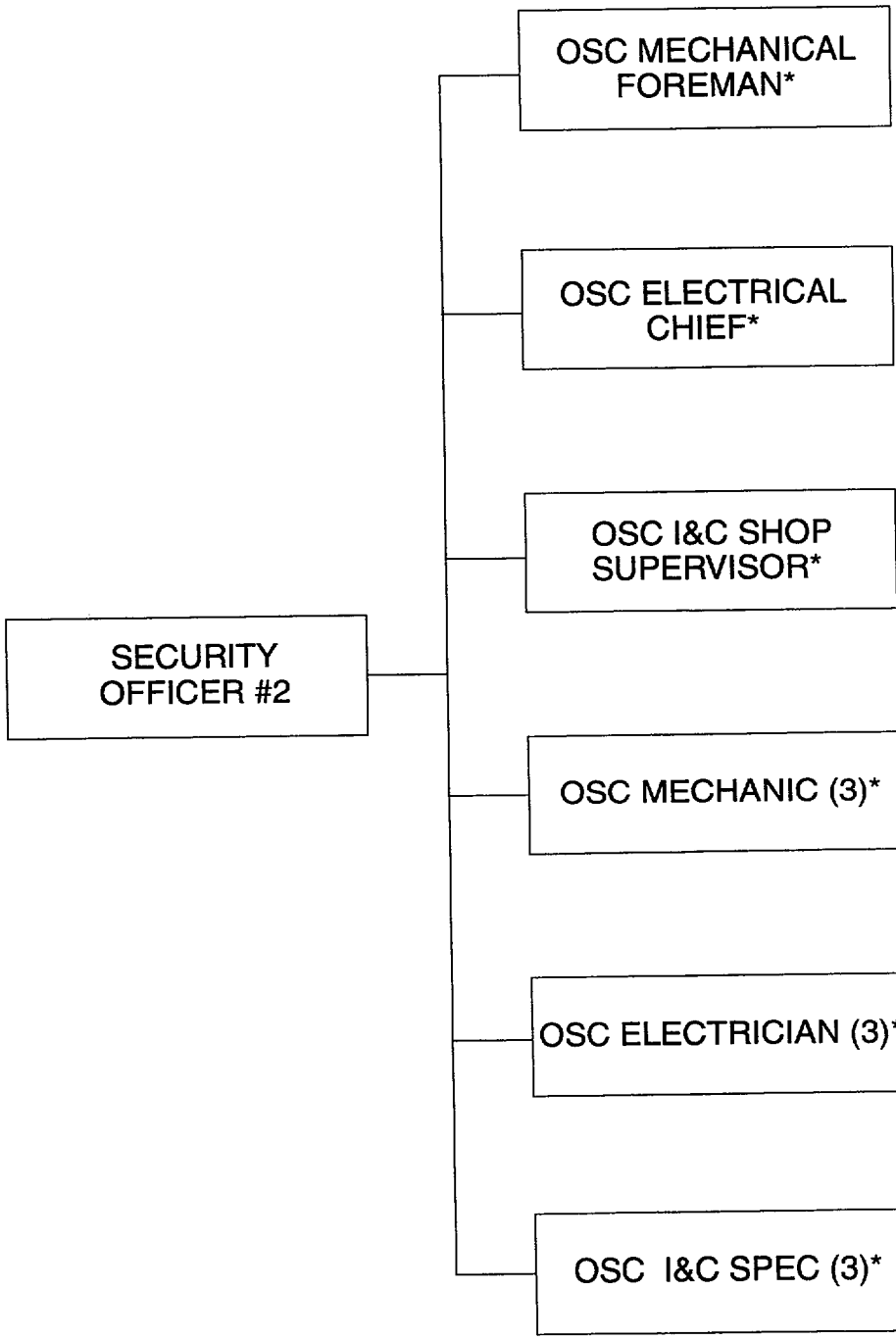

* MINIMUM STAFFING POSITION OR FIRST LINE ALTERNATE TO MINIMUM STAFFING POSITION

ATTACHMENT 1
EMERGENCY STAFFING CALL TREE
(Page 4 of 11)

SECURITY OFFICER #3

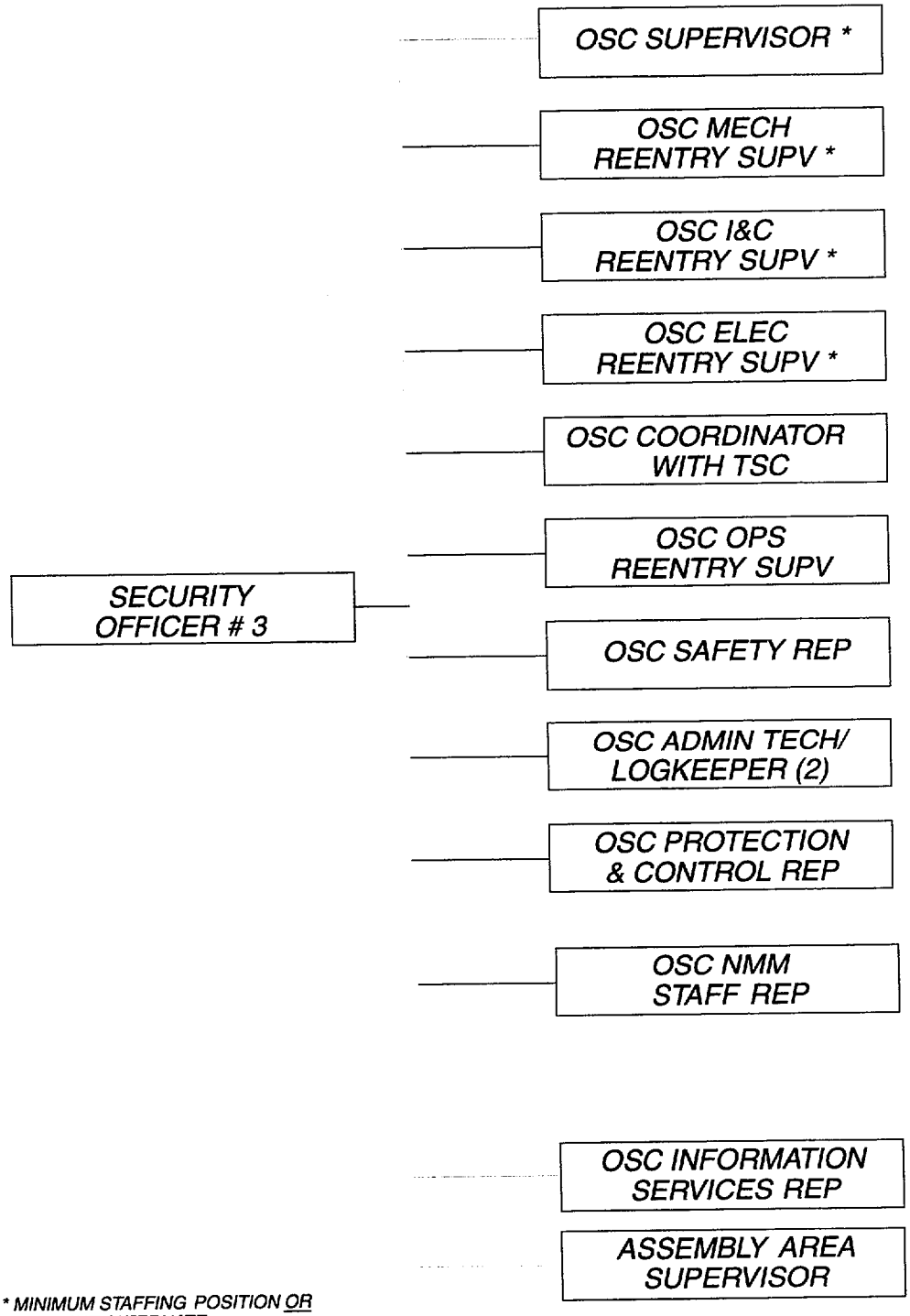

* MINIMUM STAFFING POSITION OR FIRST LINE ALTERNATE TO MINIMUM STAFFING POSITION

/R8

ATTACHMENT 1
EMERGENCY STAFFING CALL TREE
(Page 5 of 11)

SECURITY OFFICER #4

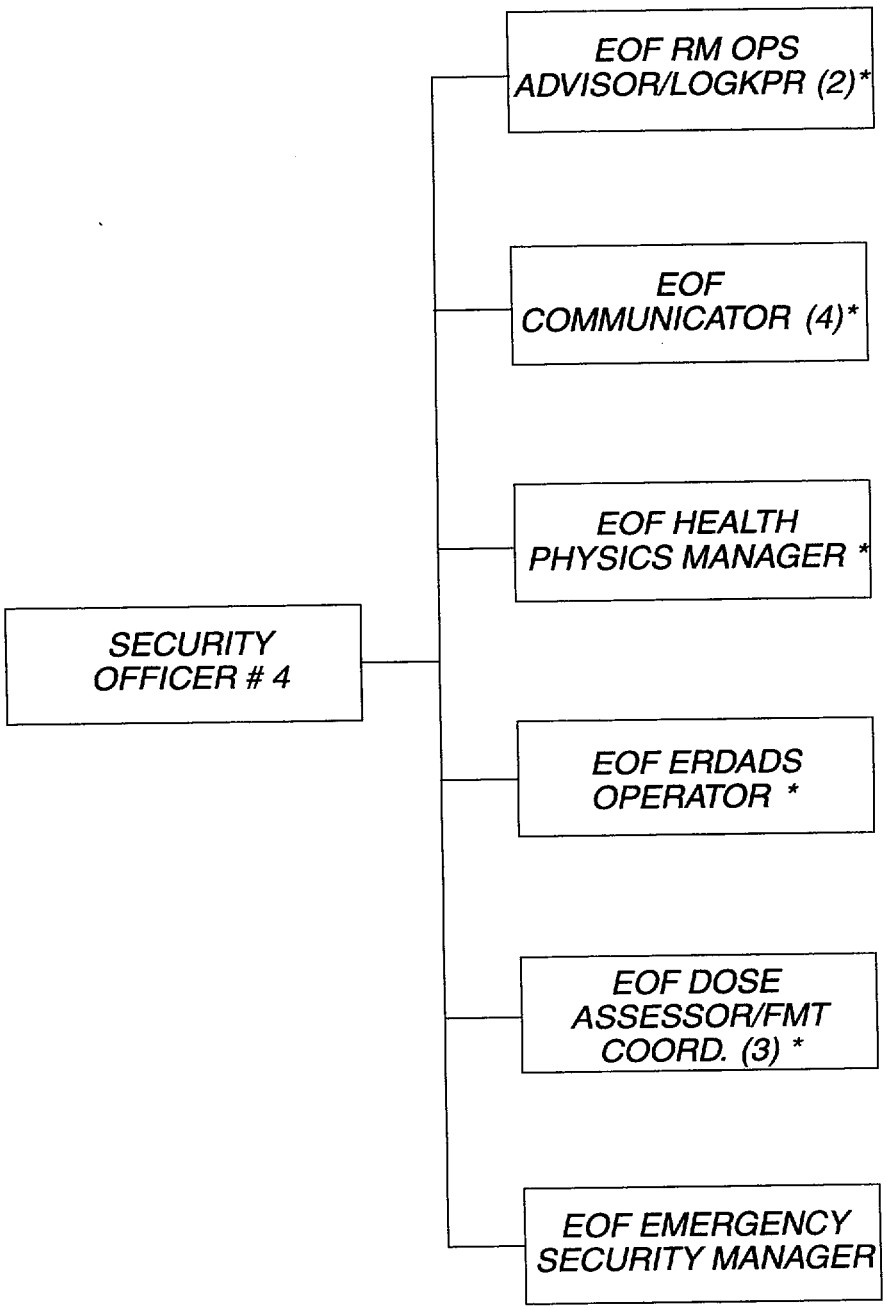

** MINIMUM STAFFING POSITION OR FIRST LINE ALTERNATE TO MINIMUM STAFFING POSITION*

ATTACHMENT 1
EMERGENCY STAFFING CALL TREE
(Page 6 of 11)

NUCLEAR DIVISION DUTY OFFICER

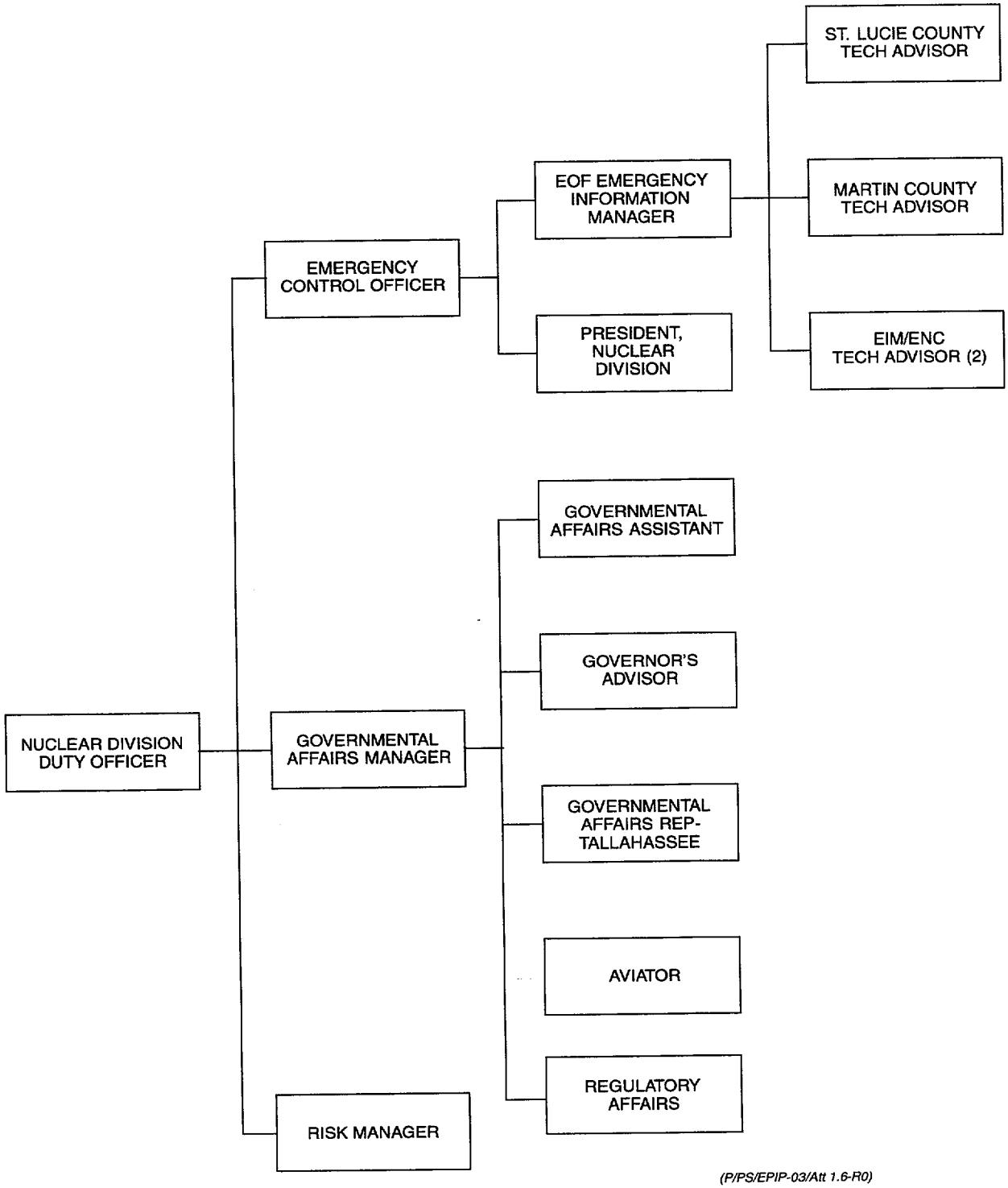

ATTACHMENT 1
EMERGENCY STAFFING CALL TREE
(Page 7 of 11)

TSC EP COORDINATOR

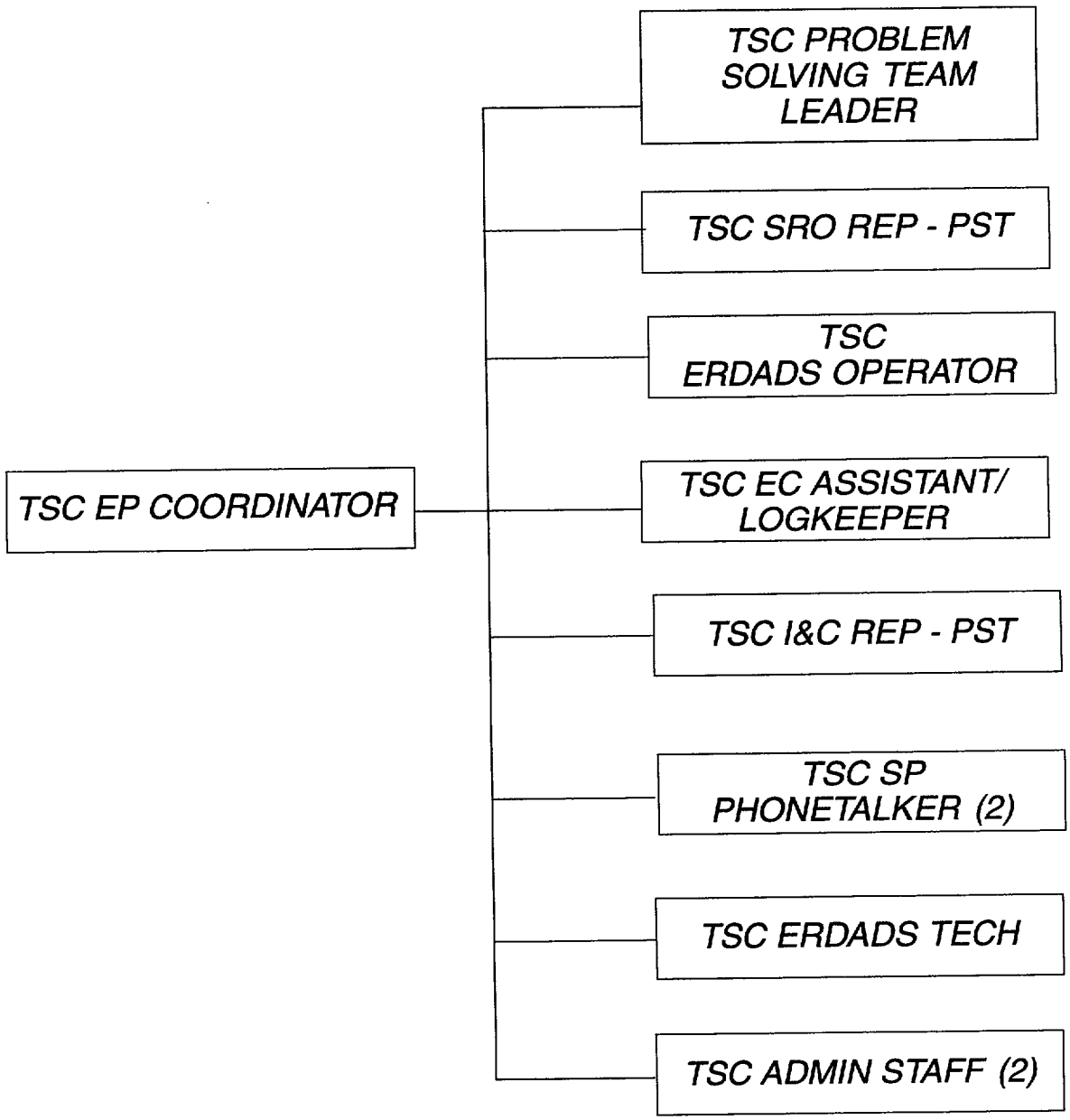

(P/PS/EPIP-03/Att 1.7-R0)

ATTACHMENT 1
EMERGENCY STAFFING CALL TREE
(Page 8 of 11)

EP MANAGER

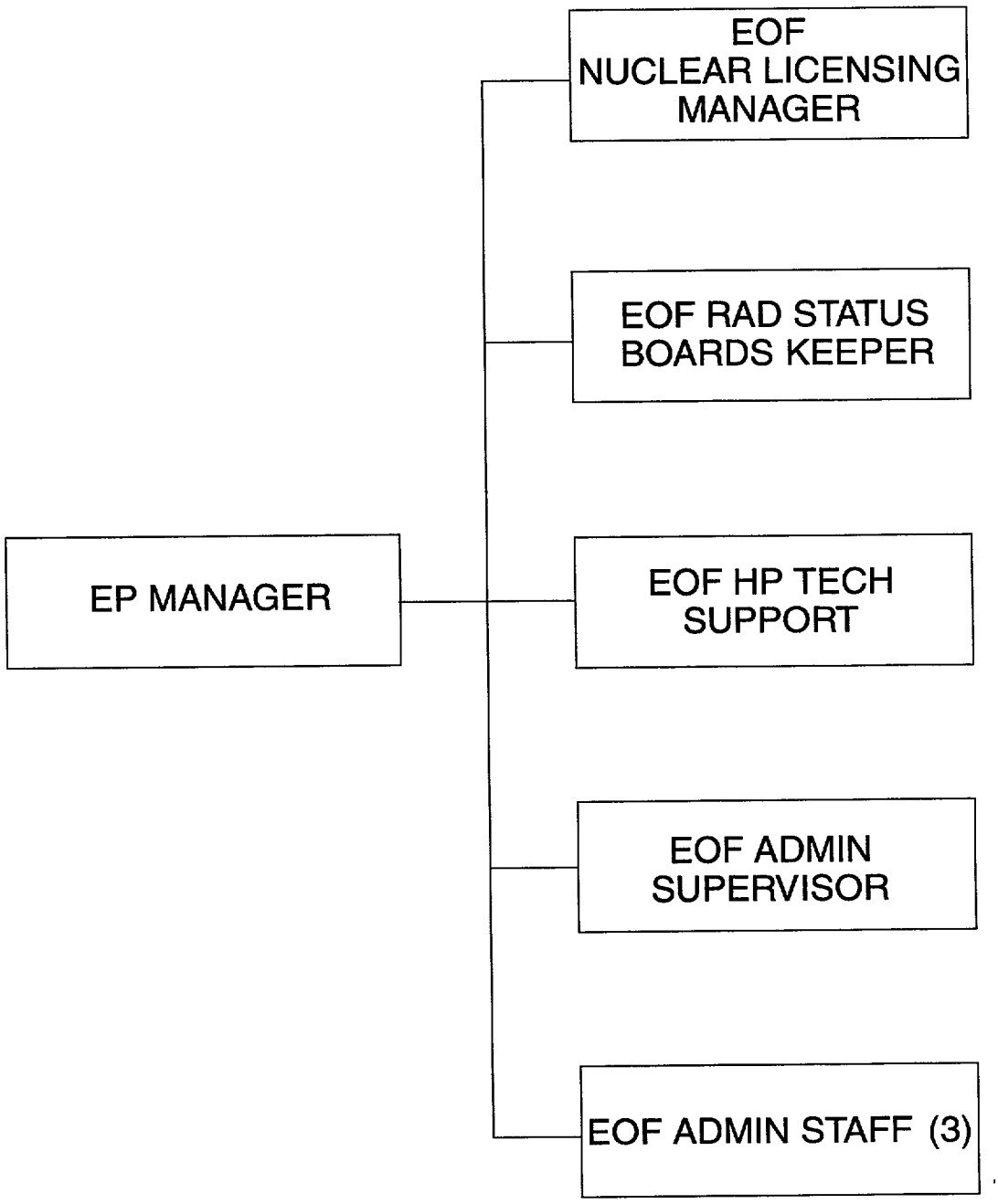

(P/PS/EPIP-03/Att 1.8-R0)

ATTACHMENT 1
EMERGENCY STAFFING CALL TREE
(Page 9 of 11)

EOF EMERGENCY TECHNICAL MANAGER

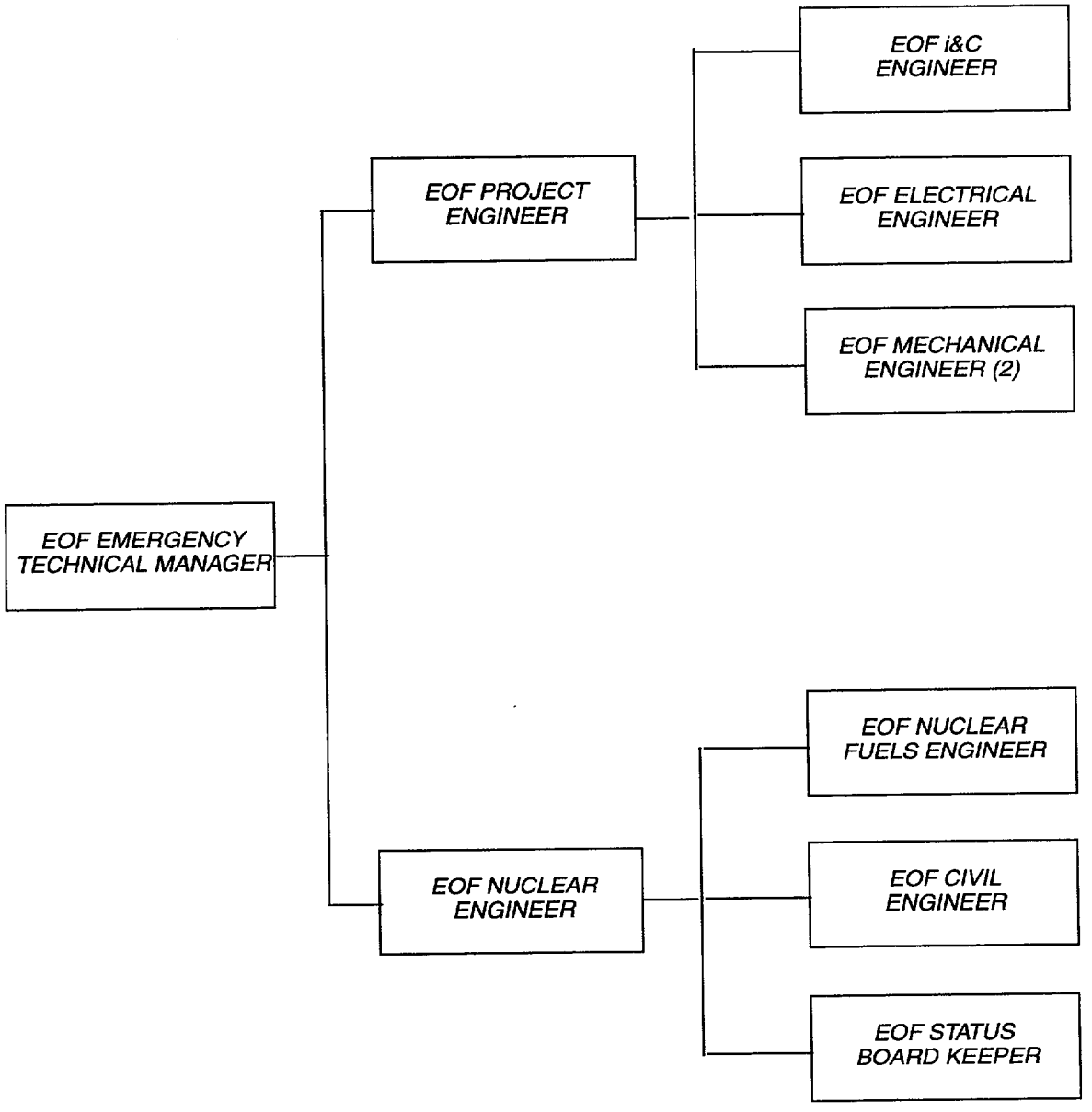

(P/PS/EPIP-03/Att 1.9-R0)

ATTACHMENT 1
EMERGENCY STAFFING CALL TREE
(Page 10 of 11)

Emergency Response Organization Positions List

Position	Title	Position	Title
100	Duty Call Supervisor	161	OSC Electrician (3)
101	Emergency Coordinator	162	OSC Mechanic (3)
102	TSC Supervisor	163	OSC I&C Specialist (3)
103	TSC HP Supervisor	166	OSC Dosimetry Technician
104	TSC Chemistry Supervisor		
105	TSC Reactor Engineer	168	OSC Mechanical Foreman
106	TSC Communicator (3)	169	OSC NMM Staff Rep
107	TSC Elec Rep - Problem Solving Tm	170	OSC Safety Rep
108	TSC Mech Rep - Problem Solving Tm (3)	171	OSC Admin Tech / Logkeeper (2)
109*	HP Shift Supervisor / On Shift Tech	172	Assembly Area Supervisor
110	TSC Ops Coordinator (2)	173	OSC Ops Reentry Supervisor
111	TSC Dose Assessor	174	OSC Protection and Control Rep
112	TSC HP Communicator (2)	175	OSC I&C Shop Supervisor
113	TSC SP Phonetalker (2)	176	Field Monitoring Team Driver (3)
114	TSC ERDADS Operator	177	OSC Information Services Rep
115	TSC Problem Solving Team Leader	180*	Security Shift Specialist
116	TSC ERDADS Tech	181*	Security Officer (4)
117	TSC I&C Rep - Problem Solving Tm	200	Recovery Manager
118	TSC SRO Rep - Problem Solving Tm	204	Risk Manager
119	TSC Security Supervisor	205	Governmental Affairs Manager
120	TSC Coordinator with OSC	209	EOF RM Ops Advisor / Logkeeper (2)
121	TSC Administrative Staff (2)	213	EOF ERDADS Operator
122	TSC EP Coordinator	216	EOF Status Board Keeper
124	TSC EC Assistant / Logkeeper	230	EOF Emergency Technical Manager
151	OSC HP Tech (ALL)	231	EOF Project Engineer
152	OSC Electrical Reentry Supervisor	232	EOF Mechanical Engineer (2)
153	OSC I&C Reentry Supervisor	233	EOF Nuclear Engineer
154	OSC Mechanical Reentry Supervisor	235	EOF Nuclear Fuels Engineer
155	OSC Chemistry Supervisor	236	EOF Civil Engineer
156	OSC Electrical Chief	237	EOF I&C Engineer
157	OSC Supervisor	238	EOF Electrical Engineer
158	OSC Coordinator with TSC	240	EOF Health Physics Manager
159	OSC HP Supervisor	245	EOF Dose Assessor / FMT Coord. (3)
160	OSC Chemist (3)	246	EOF HP Tech Support

*Not ERO positions, but are needed to ensure automated call-out logic will function properly.

/R8

ATTACHMENT 1
EMERGENCY STAFFING CALL TREE
(Page 11 of 11)

Emergency Response Organization Positions List

Position	Title	Position	Title
247	EOF Rad Status Boards Keeper	279	Regulatory Affairs
250	EOF Nuclear Licensing Manager	280	EOF Administrative Supervisor
255	EOF Communicator (4)	281	EOF Administrative Staff (3)
260	EOF Emergency Security Manager	290	EP Manager
270	EOF Emergency Information Manager	291	Governor's Advisor
271	Nuclear Division Duty Officer	294	St. Lucie County Technical Advisor
273	EIM / ENC Technical Advisor (2)	295	Martin County Technical Advisor
275	Governmental Affairs Assistant	300	Emergency Control Officer
276	Gov Affairs Rep (Tallahassee)	301	Chief Nuclear Officer
278	Aviator		

/R8A

END OF ATTACHMENT 1

ATTACHMENT 2
FPL EMERGENCY RECALL SYSTEM (ERS) ACTIVATION CHECKLIST
(Page 1 of 2)

Name:_____ Unit:_____

Date:____/____/____ Time:_____

1. Prior to making the call, determine the appropriate scenario to activate. Use scenario **30** during normal working hours, or use scenario **50** for an off-hours activation. You will be requested to enter the two digit scenario number during the call.

   Scenario to be used:_____

> **NOTE**
> When you call, enter the password (refer to the DCS Notebook) as soon as the system answers and begins talking. If you wait until the message is complete, you will not be able to connect to the system.

2. Call the Emergency Recall System at **8-694-4200** or **8-1-561-694-4200**.

3. Enter the password as soon as the system answers.

Unit 1 - **Refer to DCS Notebook** Unit 2 - **Refer to DCS Notebook**

WHEN THE SYSTEM STATES . . .	YOU SHOULD ENTER . . . Circle One
"Enter the scenario number you want to work with"	**30** - normal working hours **50** - off-hours
"That scenario is completed. Do you want to que it? Please press 9 for yes or 6 for no."	**9** - to confirm the scenario **6** - to cancel
"Enter scenario status. Press 1 for emergency, 2 for response drill, or 3 for telephone test."	**1** - for an emergency activation **2** - to run a response drill, having personnel respond to the facilities **3** - for a telephone test only, with no response to the facilities

ATTACHMENT 2
FPL EMERGENCY RECALL SYSTEM (ERS) ACTIVATION CHECKLIST
(Page 2 of 2)

WHEN THE SYSTEM STATES (cont.)	YOU SHOULD ENTER (cont.) Circle One
"To record a custom message, enter star, star (**), then record. To end recording, hit star again. If you have no information available or do not wish to record a message, enter zero, zero followed by the pound (#) symbol."	** - This is an optional message. If you choose to use it, you should make a single statement regarding the status of the emergency. Example: "Alert based on greater than 50 gallon per minute Reactor Coolant System leak." If a significant radiological release could affect site access, a message should be recorded similar to: "Enter the plant from the (north / south)." **00#** - no message
"You have entered the following emergency message . . . ____, which states _____. . . .Is that correct? Press 9 for yes or 6 for no."	**9** - to confirm **6** - to cancel
"Enter a 911 event code if it's an actual emergency, an 811 event code for a response drill, or a 711 event code for a telephone."	**911** – actual emergency activation **811** - for a response drill **711** - for a telephone test
"You entered ___. Is that correct? Press 9 for yes or 6 for no."	**9** - to confirm **6** - to cancel
"At the end of this step you have chosen to start scenario ____ as a ____. Are you certain this is what you want to do? Please press 9 for yes, 6 for no."	**9** - to activate the autodialer **6** - to cancel and hang up

4. Initiate the manual call-out process in accordance with EPIP-03, Emergency Response Organization Notification / Staff Augmentation.

5. To verify that the system has activated, use one of the following:

- report received on the telecopy machine in either Control Room, or
- report of appropriate pager activation from any Emergency Response Organization member.

6. If verification is not received within **10** minutes, Then continue the manual call-out in accordance with EPIP-03.

END OF ATTACHMENT 2