ER-262
JANUARY 2002
REV 0

CALDON, INC.
ENGINEERING REPORT: ER-262

EFFECTS OF VELOCITY PROFILE CHANGES MEASURED IN-PLANT ON FEEDWATER FLOW MEASUREMENT SYSTEMS

Prepared By: Herb Estrada
Reviewed By: Ernie Hauser

Engineering Report: ER-262

EFFECTS ON FEEDWATER FLOW MEASUREMENT SYSTEMS OF VELOCITY PROFILE CHANGES MEASURED IN-PLANT

Table of Contents

Executive Summary 3

Background 5

Conclusions 7

Bases for Conclusions, Caldon Chordal Instruments 8

Bases for Conclusions, Caldon External Instruments 11

Appendices

A. Enclosure to letter, Susquehanna Benchmark Alarm Evaluation and Recommendations, *Evaluation of Velocity Profile Change at SSES Unit 2*, dated October 16, 2001

B. Letter, H. Estrada, Caldon to Ms. Debra Echols, Tennessee Valley Authority, dated September 7, 2001,"Change in Velocity Profile Measured by the WBN LEFM [Check]"

C. Calculation: *Determination of Axial Velocity Profiles from Chordal Velocity Measurements*, dated October 31, 2001.

D. Summary Table: *Evaluation of Hydraulic Configurations and Uncertainties for Operating External LEFMs*

E. Scoping Calculation: *Errors in Flow Nozzles with Swirl Velocity of 10% Axial Velocity*

F. Plant Data, 4 and 8 Path Chordal Installations

EFFECTS OF MEASURED VELOCITY PROFILE CHANGES ON LEFM FEEDWATER FLOW MEASUREMENT SYSTEMS

Executive Summary

Caldon ultrasonic flowmeters are used to measure feedwater flow and temperature in over 40 nuclear power plants, for the calorimetric determination of reactor core thermal power. This report is submitted in accordance with Caldon's commitment to inform their customers of new information that could affect the design bases for these instruments.

Caldon chordal ultrasonic flowmeters determine fluid velocity on 4 or 8 diagonal parallel chords, by measuring the transit times of ultrasonic pulses traveling along the chords. They therefore provide a direct measurement of the velocity profiles in the pipes in which they are installed. A survey of data from 18 chordal systems operating in nuclear feedwater systems shows that fluid velocity profiles in these systems are very dynamic. In locations meeting commonly used criteria for locating flow elements, swirl can vary from 1% to over 10% of the axial velocity. Axial profiles can change from nominal "roundness" to a shape flatter than that for fully developed flow in smooth pipe.

This report includes analyses demonstrating that the effect of these variations on the calibrations of Caldon LEFM Check and LEFM CheckPlus flowmeters (used to support "Appendix K" power uprates) is very small—less than 0.1%. Parametric tests performed during the calibration of the flow elements for these systems also show that the impact on chordal instruments of changing profiles is small. An allowance covering changes due to profile uncertainties is (and has been) included in the uncertainty analyses for these instruments.

This report also analyzes the effects of the measured velocity profile changes on Caldon External LEFMs, which determine flow from the transit times of acoustic pulses traveling along diagonal diametral paths. There are 25 such systems in nuclear service. They are being used to "recover megawatts", that is, to provide an indication of feedwater flow accurate enough to conform with a plant's current licensing basis with respect to calorimetric accuracy, but not subject to the "fouling"—deposition of corrosion products --that sometimes causes flow nozzles to read conservatively. The analysis shows that the calibrations of these external instruments are sensitive to the varying profiles. The change in the calibration of an external system installed at the average location described by the chordal data would be 0.7%. In several locations, changes greater than 1% would be experienced. Furthermore, the data of this report indicate that the calibration coefficients of external meters at typical hydraulic locations are typically higher than that for fully developed flow in smooth pipe. If one installed an external instrument at a location complying with conventional criteria for the location of flow instruments, and if he assumed (without testing) a "fully developed flow" calibration coefficient for the instrument, the flow measurement would, on average, be low by (that is, non conservative) by ½ %.

Obviously, any external system in service for the determination of calorimetric power should be evaluated in light of this new data. Accordingly, a survey of the design bases and hydraulic geometries for all operating Caldon external systems was performed. Results are included herein. Fortunately, all but one external LEFM are shown to be operating within their design bases, variable velocity profiles notwithstanding. The reasons that these systems are satisfactory are:

(a) Their calibrations are based on hydraulic models of the fluid system geometry in which they are installed. As a result of this practice, the calibration coefficients (profile factors) for these instruments tend to be correct for the average conditions prevailing at typical feedwater measurement locations.
(b) The uncertainty analysis for Caldon external instruments includes an explicit allowance for changes in profile that may occur in service. An allowance of up to ± 0.5% is included for changes in pipe wall roughness; a typical overall profile factor uncertainty is ± 0.8%.

In the case of the one external LEFM whose design basis uncertainty was insufficient, the extreme profile variations appear to have occurred only twice during the 5 year period when the instrument was installed. Fortunately, neither instance led to plant operation outside its design basis. The first instance occurred during a power coastdown, when the unit was at reduced power. During the second, the external LEFM was not being used for thermal power determination; for this function, an LEFM Check had replaced it.

The measured velocity profile variations described in this report have implications with respect to the performance of the other types of feedwater flow instruments. A large and varying swirl can produce significant errors in flow nozzles. The presence of swirl will cause a nozzle based instrument to read conservatively.

Furthermore, the character and variations in the axial velocity profile can affect the calibration of externally mounted cross correlation meters, as they do the calibrations of Caldon's externally mounted transit time meters.

A detailed evaluation of the effects of the profile variations on the calibrations of instruments not designed by Caldon is beyond the scope of this report. Nevertheless, the velocity profile data included herein may be useful to others for evaluating the effects of such changes. The report includes a brief section discussing the scope and nature of such evaluations.

Background

Caldon ultrasonic flowmeters are used to measure feedwater flow and temperature in over 40 nuclear power plants, for the calorimetric determination of reactor core thermal power. This report is submitted in accordance with Caldon's commitment to inform their customers of new information that could affect the design bases for these instruments.

A subset of Caldon instruments--the LEFM Check and the LEFM CheckPlus chordal flowmeters -- support licensed power uprates of 1.4 to 1.7%. These instruments incorporate an alarm (the Benchmark Velocity alarm) that annunciates when the velocity measured on any one of the 4 chords differs from a reference value by more than a preset amount. A reference value for each path velocity is established when the instrument is commissioned. The purpose of the alarm is to alert the user of the LEFM that the velocity profile may have changed from that which prevailed when the instrument's calibration was established. Such a change might imply an unbounded calibration error.

Three separate plants have recently experienced a Benchmark Velocity alarm. In each case, the alarm occurred after months of service. Each case was characterized by a substantial change in swirl velocity, which was primarily responsible for the alarm. Potential causes for these profile changes are discussed later in this document.

This recent experience has led Caldon to perform evaluations addressing the following questions:

- Have these profile changes introduced significant errors in the flow measurements where they occurred?
- Have profile changes occurred in older installations of chordal LEFMs (i.e., plants not yet uprated) that would have caused a Benchmark Velocity alarm in an LEFM Check or CheckPlus?
- If the errors introduced by the profile changes that have occurred are acceptable, is there appropriate logic and/or settings for the Benchmark Velocity alarm that will at once avoid unnecessary alarms, and provide adequate annunciation against profile changes that would cause unacceptable uncertainties in instrument calibration?
- What are the implications of the measured changes in velocity profile for Caldon's external flow measurement systems? There are 25 such systems in nuclear service. While these systems are not used for uprates, they are being used to "recover megawatts". In this function, the systems must meet the former requirements of Appendix K; that is, they must deliver a calorimetric accuracy of better than 2.0%. The instruments have an accuracy of about ±1.0% so they provide an indication of feedwater flow accurate enough to conform with a plant's current licensing basis with respect to calorimetric accuracy, but not subject to the "fouling"—deposition of corrosion products --that sometimes causes flow nozzles to read conservatively. More specifically, would the changes in profile that have been experienced introduce errors in the calibration of these external instruments that are not bounded in their design basis uncertainty analysis? There is one datum that suggests that this could be the case: An external LEFM *and* an LEFM Check system were installed at one of the three plants wherein a significant change in profile caused a Benchmark Velocity alarm in the LEFM Check system. The external LEFM had been used for feedwater flow measurements prior to the installation of the LEFM Check and had been maintained in operating condition after its installation. Coincident with the profile change, the calibration of the external instrument changed by approximately 1.5% relative to two independent references. Later in this report, it will be shown that

the measured change in the external system calibration is exactly consistent with the change in profile "seen" by the LEFM Check.

- If profile changes are common, why have their effects not been seen, with existing instrumentation?

To address these questions Caldon has performed the following tasks:

1. A comprehensive survey has been made of the hydraulic configurations and operating data for 18 chordal LEFM systems, to determine whether the three recent profile changes are comparable to changes that have gone unnoticed elsewhere, and whether they are bounding.
2. Calibration testing and the uncertainty analyses for these chordal LEFMs have been reviewed to ensure that their design basis uncertainty analysis bounds the potential errors that the measured changes in profile might induce. Additionally, a semi-empirical analysis has been used to calculate potential errors due to changes in profile on a more general basis. The analysis provides additional assurance that potential errors induced by profile changes are bounded by the chordal LEFMs' uncertainty analyses.
3. Revised settings for the Benchmark Velocity alarm have been established, to provide assurance of protection against errors in calibration outside the design basis, without unnecessary alarms. In addition, enhanced logic is under development that will allow robust protection against excessive profile changes without requiring site specific tailoring. The revised alarm logic will remain consistent with the description of this feature in ER 80P and ER 157P. It is expected that this work will be completed by the end of the first quarter of 2002.
4. The profile variations extracted from the data for operating chordal systems have also been used to compute potential variations in the calibration coefficient (Profile Factor) of externally mounted LEFMs in hydraulic locations similar to those of the chordal systems from which the data were taken.
5. The hydraulic configurations, the calibration testing and the uncertainty analyses for all externally mounted LEFMs that are currently operational have been reviewed, to determine whether the calibration uncertainty allowances bound the potential changes implicit in the chordal data. Based on this analysis a determination has been made as to whether a change to the design basis for any externally mounted LEFM currently in operation is appropriate.

The results of this work are summarized in the Conclusions section below. Supporting analyses for chordal LEFMs and external LEFMs are described in the sections following the Conclusions, and in the Appendices.

The velocity profile variations extracted from the chordal system operating data have implications with respect to the performance of the other types of feedwater flow measurement systems. The LEFM locations in two of the three installations where the Velocity Benchmark alarms occurred comply with criteria used in many nuclear plants for the location of flow nozzles and for the location of externally mounted ultrasonic systems provided by other vendors. A detailed evaluation of the effects of the observed profile changes on the calibrations of instruments not designed by Caldon is beyond the scope of this document. Nevertheless, the velocity profile data included in this document may be useful to others for evaluating the effects of such changes. A brief section discussing the scope and nature of such evaluations is also included in this report.

Conclusions

1. An evaluation of the calibration data for LEFM Check and LEFM CheckPlus systems and an analysis of the effect of profile changes measured at 18 separate chordal installations show the following: Profile changes, particularly due to changes in swirl velocity, are not uncommon. However, the potential calibration error that the spectrum of observed profile changes might induce in a 4 or 8 path chordal system is less than 0.1% and within the design basis for these instruments. An allowance for errors due to profile changes is included in the uncertainty analysis for each of these instruments and bounds the observed changes.

2. Changes in swirl velocity have been principally responsible for the recent Benchmark Velocity alarms. These changes in swirl velocity induce changes in the axial profile (an increase in swirl tends to flatten the profile, because of the increased centrifugal force). But as noted in 1 above, the changes in axial profile are not sufficient to change chordal meter calibration significantly. A change in the alarm logic and/or threshold is necessary to prevent nuisance alarms. For the three units where the alarm has occurred, a site specific evaluation was made and revised settings were implemented. These settings will both prevent unnecessary alarms and provide assurance that profile changes outside the design basis will be annunciated. For other units, revised logic that eliminates the sensitivity of the alarm to changes in swirl velocity will be employed. This enhancement will provide robust protection without the need to tailor settings for individual units.

3. While the axial profile changes evident from the chordal data do not significantly alter the calibrations of 4 and 8 path chordal instruments, they *will* produce significant calibration changes in instruments that measure velocity along one or more diametral paths, such as external transit time instruments or cross correlation instruments. In the worst case, the differences in profile shapes in one of the loops at one installation would have produced a change of 1.8% in the calibration of a Caldon externally mounted LEFM installed at that location. For the changes in velocity profiles observed at the 18 chordal installations surveyed, the mean potential calibration change for external LEFMs would be 0.7%.

4. The calibrations of Caldon external instruments are based on hydraulic models of the fluid system geometry in which they are installed. As a result of this practice, the calibration coefficients (profile factors) for these instruments tend to be correct for the average conditions prevailing at typical feedwater measurement locations. The mean external system profile factor for the 18 chordal meter locations is about 0.96, typical of a profile factor for a Caldon external system in feedwater service. Furthermore, the uncertainty analysis for Caldon external instruments includes an explicit allowance for changes in profile that may occur in service. An allowance of up to ± 0.5% is included for changes in pipe wall roughness; a typical overall profile factor uncertainty is ± 0.8%. Because of these design practices, the potential for change in the calibration of these external instruments does not lead to the general conclusion that their design basis is invalid.

5. A review of all Caldon external LEFMs currently in operation, in light of the chordal data, has concluded that the design basis uncertainties for every external system but one are sufficient to cover potential changes. For each external system, the owner has been provided with a report documenting the installation-specific evaluation for that system, to be incorporated in the design basis for the system.

6. The case of the external LEFM whose design basis uncertainty was insufficient was made evident by data collected from a chordal LEFM Check installed downstream. (This case was touched on in the Background section above.) The excessive error in the external LEFM resulted from a combination of circumstances:

   - The hydraulic model for the fluid system, on which the calibration of the external LEFM was based, failed to include hydraulically distant non planar features that, under certain operating conditions, are capable of producing swirl.
   - An extreme change in the pipe wall roughness, brought about by an operational transient, caused the swirl in the vicinity of the external meter to increase from 2% to 10% of the axial velocity. With 2% swirl, the calibration of the external LEFM appears to have had a net bias (from all error sources) of 0.3 to 0.5%, which is within its design basis.
   - The increase in swirl, in combination with the reduction in wall roughness, flattened the axial profile. The change in axial profile was sufficient to increase the bias in this external LEFM to around 2%, obviously outside its design basis.

   To avoid errors of this magnitude in future external LEFM installations, Caldon has formulated a program of remedial actions. These actions impact the selection of hydraulic locations for the external LEFM, hydraulic modeling practices, and the selection of uncertainties.

   Fortunately, the external system where this error occurred was not being used to determine thermal power at the time the change occurred. (The chordal LEFM Check system had replaced it as the calorimetric feedwater measurement.) Based on a detailed evaluation of operating data from this external LEFM from the time it was installed (1996) to the present, the extreme change in profile that led to the excessive calibration error appears to have occurred only one other time in its operating history. When it occurred, the plant was in a "coastdown" prior to refueling, and was operating significantly below full power. Hence, the calibration error, if present, did not cause the plant to operate above its licensed thermal power. A report of this evaluation has been forwarded to the owner of this external LEFM for his records.

Bases for Conclusions, Caldon Chordal Instruments

Detailed evaluations of two recent instances where the Benchmark Velocity alarm software detected a significant change in profile are documented in Appendices A and B. In both cases, a plant transient led to a significant increase in swirl and a flattening of the profile. An increase in the tangential velocity projected onto the outside chords (i.e., an increase in swirl) caused the alarm to annunciate in each case. Although the tangential velocity increase was sufficient to trigger the Benchmark Velocity alarm—a change in the range of 5% of the tangential velocity occurred-- the change in the *axial* velocity profile was, in both cases, smaller. In installations like those at the plants of Appendix A and B, it is the axial profile that can affect the LEFM calibration.[1] The change in the axial velocity profile in each of the two cases documented in these appendices can be gauged by examining the ratio of the average outside

[1] If the swirl is centered, the tangential velocity contribution to one chordal velocity measurement is offset by an equal and opposite contribution to the similar chordal measurement on the other side of the pipe centerline. Assurance that the swirl is centered is obtained (a) by calibration testing in a model of the actual fluid system geometry, and (b) by orienting the spool, in most cases, to minimize the potential error. The orientation rules are based on experiments documented in Westinghouse Oceanic Division Report OEM 78-40, February 1979, G.P. Erickson and P.G. Spink

(short) chord velocity to the average inside (long) chord velocity—the short path/long path velocity ratio or SP/LP VR. In the unit of Appendix A, a down power transient caused the profile in one of its three LEFMs to flatten, as evidenced by its SP/LP VR increasing from 0.87 to 0.89 (the other two profiles did not change significantly). In the unit of Appendix B, a reactor trip, followed by several days of operation with the feedwater system in the "long recycle" mode, led to a more significant increase in SP/LP VR—from 0.85 to 0.89.

In both instances described in Appendices A and B, the operational transient appears to have brought about a sudden decrease in pipe wall roughness. In the case of Appendix B, the change in wall roughness was likely caused by a change in feedwater chemistry coincident with the operational transient. The decrease in wall roughness has two additive effects on the profile: (1) the decrease in losses at the wall causes the axial profile to become blunter, in and of itself, and (2) the rate of dissipation of any swirl that may be present is reduced. This in turn leads to an increase in swirl velocity that further flattens the profile.

Prior to these incidents, it was Caldon's expectation that changes in profile due to wall roughness effects would probably be uncommon and, when they did occur, would be gradual in nature. The data collected in the two units described in Appendices A and B show that this expectation was incorrect. Three months after the transient described in Appendix B, the profile in this plant abruptly returned to its pre-transient form. The return was coincident with a second downpower transient. In the case of the profile of Appendix A, the return to form occurred in a few days, but more gradual in nature.

To determine how common profile variations of the kind described in Appendices A and B are, and whether these transients are bounding, a survey of operating data was performed for a large number of Caldon chordal systems. These data are compiled in Appendix F and are summarized in Table 1. This table presents, in the third and fourth columns, the maximum and minimum Short Path/Long Path Velocity Ratios from a sample of data from 18 chordal LEFM installations in the US. The table shows that changes in SP/LP VR comparable to those described in Appendices A and B—0.02 to 0.05 or 2% to 5%-- have been seen in two other installations, and that variations in axial profile shape are common.

The evaluations of Appendices A and B demonstrate that the changes in axial profile that took place coincident with the Benchmark Velocity alarm did not result in changes in calibration outside the allowance for profile uncertainty in their design basis uncertainty analysis. To do this, the appendices rely on experimental data taken during the calibration testing of the spool pieces used in these plants. During these tests, the configuration of the hydraulic model is intentionally varied parametrically. The changes in calibration coefficient that result are used to bound the uncertainties in the model. In this process, chordal velocity data are also recorded. Typically, the parametric variations can result in large changes in the chordal velocities and, to a lesser extent, to the SP/LP VR, but changes in calibration are less than 0.1%.

To allow a more general conclusion relative to the effect of changes in axial profile on calibration, however, this evaluation has taken another approach. Symmetrical axial profiles can be described using the inverse power law, which represents the spatial axial velocity distribution in a pipe of circular cross section as follows:

$$u / U = (y / R)^{1/n}$$

Where u is local fluid velocity,
U is the fluid velocity at the centerline,

y is the distance from the pipe wall,
R is the internal radius of the pipe, and
n is an empirically determined exponent.

The inverse power law was used extensively by Nikuradse and others to fit flow profiles over a wide range of Reynolds Numbers in rough and smooth pipe, in the development of the methodology for calculating friction losses in turbulent flow[2].

Profiles having various Short Path/Long Path Velocity Ratios have been fitted by varying the exponent in this relationship. From these fits, the effect of changes in SP/LP VR on the calibration of a 4 chord LEFM has been calculated (The work also applies to the 8 chord LEFM CheckPlus). The calculation is described in Appendix C.

Figure 1 has been prepared to allow the reader to visualize some of the velocity profiles encountered in the analyses of this report. The figure shows velocity profiles along a diametral path for four exponents typifying the range of profiles encountered in the data of Table 1. The profile for n equals 9 would be produced by feedwater flowing in moderately rough pipe; the Short Path/long Path Velocity Ratio here would be about 0.85. This profile resembles that prior to the transient described in Appendix B. The n equals 10 curve corresponds to smooth pipe and would produce an SP/LP VR of about 0.87. The n equals 12 curve is flatter than that which will occur in smooth pipe, but can occur in a developing flow field whose profile has been flattened by upstream hydraulics. It resembles closely the profile after the transient described in Appendix B and would produce a SP/LP VR of 0.89. The profile for n equals 25 is representative of the flat profiles that occur close to hydraulic disturbances such as header offtakes. It would produce a SP/LP VR of 0.95.

The relationship between the Profile Factor (calibration coefficient) and SP/LP VR for 4 and 8 chord LEFMs is graphed in Figure 2. A linear fit (also shown in the figure) has been used to characterize the relationship. Using this linear equation, the Profile Factors corresponding to the maximum and minimum SP/LP VRs for each of the 18 chordal systems in Table 1 have been calculated. Results are presented in the table.

The table shows that in only two of 18 instances is a profile change sufficient to cause a calibration (profile factor) change, Δ, in excess of 0.0005, or 0.05%. The largest Δ in a specific unit is 0.0008 or 0.08% for IP 2, Loop 22. These figures are consistent with experimental results and provide high confidence that, though profiles may change, changes leading to calibration errors outside the design basis for chordal instruments are extremely unlikely. A change in SP/LP VR of more than 0.06 or 6% would be required to generate a calibration change exceeding 0.1%.

In the three LEFM Check and CheckPlus installations where Benchmark Velocity alarms have already occurred, revisions to the setting of the alarm were made. The revised settings were developed on the basis of unit specific calibration test results. These settings provide protection against axial profile changes that could cause a calibration bias exceeding 0.1% without high risk of unnecessary alarms.

For other units, revised logic that eliminates the sensitivity of the alarm to changes in swirl velocity will be employed. This enhancement will provide robust protection without the need to tailor settings for individual units.

[2] *Boundary Layer Theory*, Dr. H. Schlichting, McGraw Hill, Sixth Edition, Chapters XIX and XX.

Bases for Conclusions, Caldon External Instruments

Snell's Law of Refraction dictates that any external ultrasonic meter used in the measurement of fluid flow in circular pipes must sample the axial fluid velocity projected onto a diametral chord.[3] The profile changes implicit in the chordal velocity data of Appendix F and Table 2 raise a concern that the calibration of external ultrasonic systems may be more variable than previously thought. Accordingly, the data of Table 1 have been used to calculate the maximum and minimum Profile Factors that would have been experienced by an external ultrasonic transit time instrument at each location in the table. The methodology of the calculation is similar to that used to calculate the variations in 4 path chordal profile factors and is also described in Appendix C.

The Profile Factor of an external transit time meter relates the mean axial velocity projected onto a diametral path, which it measures, to the axial velocity averaged over the cross section of the pipe. Figure 3, whose derivation is described in Appendix C, shows the relationship between the Profile Factor of an external transit time meter and the measured SP/LP VR for a velocity profile. For comparison, the relationship from Figure 2 for the Profile Factor for the 4 chord system is also shown on Figure 3; it is the flatter curve near the top of the figure. A linear fit of the Profile Factors for external transit time instruments vs. SP/LP VR (the fit is given on the figure) has been used to calculate the maximum and minimum external system Profile Factors for the profile variations recorded in the data of Table 1. This exercise provides insight as to the variations that would have been experienced by external transit time systems had they been installed at the locations of the chordal instruments of Table 1. Numerical results are presented in Table 2.

Table 2 shows that external transit time systems in the locations of the table would have experienced significant calibration changes. The mean calibration change, Δ, of the profile factors for the locations of Table 2 is 0.007 or about 0.7%. That is, an external transit time meter experiencing the profile variations at an average location from the table will change calibration by 0.7% in service. In four installations the calibration change is significantly greater than 1%; the maximum is 1.8%.

It is clearly important to confirm that the uncertainty bounds for Caldon external LEFMs include allowances for variations of this magnitude. Optimally, if the calibration procedure for external systems leads to a profile factor selection in the middle of the range of variability, the required uncertainty bounds for the profile factor would be ½ of the ranges of variation (i.e., on average, ± 0.35%, for the worst case, ± 0.9%).

Another conclusion can be drawn for Table 2. The mean profile factor for external transit time meters in all hydraulic locations of this table is 0.964—nearly 2% above the profile factor of an external transit time meter for fully developed flow in commercial steel pipe at feedwater Reynolds numbers[4]. One of the contributors to this relatively high mean profile factor is the presence of swirl in many locations where one might assume its contribution to the shape of the axial profile would be minimal. Substantial swirl persists at locations far downstream of the closest upstream bend, and even more distant from the non planar fitting that, in combination with the second bend, produces it.

[3] Differences in sound velocity between the pipe wall and the fluid, in combination with the curvature inherent in the geometry, prevent measurements on any other acoustic path.

[4] MPR Calculation 003-101-DEM-02, *LEFM Profile Factor Variation with Reynolds Number and Pipe Roughness*, 5-21-94

The swirl measured at the first entry in Table 2 (WBN) provides an example. The measurements here were 45 diameters downstream of the closest bend, and 50 to 60 diameters from the closest non planar features. Yet a swirl having a tangential velocity of about 2% of the axial velocity was present at the short chords when the meter was installed. Months later, an operational transient, described in Appendix B, caused the swirl to increase dramatically, from 2% tangential velocity at the outside chords to nearly 10%. The result was that the axial profile became significantly flatter, increasing from 0.85 to 0.89. This increase would cause the profile factor for an external meter at this location to increase from 0.947 to 0.961, a change in calibration of 1.4%.

The WBN case also provides confirmation that the calculated changes in external transit time meter calibrations (profile factors) accurately describe the actual response of such meters. As noted in the table, an external LEFM was in service 20 diameters upstream of the chordal LEFM when the profile change shown in the "Max SP/LP VR" and "Min SP/LP VR" entries for WBN took place. The calibration of the external meter shifted, relative to the chordal LEFM and relative to the total flow as measured by nozzles in the feeds to each steam generator, by 1.6%. At the external LEFM location, the swirl velocity is greater and the impact of wall roughness on rounding the developing profile is reduced, since it is only 25 diameters downstream of the bend. The profile is likely to be flatter at this location. Hence, the calculated change in calibration of 1.4% at 45 diameters is entirely consistent with the observed change of 1.6% at 25 diameters.

The results of Table 2 led Caldon to conduct a survey of the following information for each of their operating external systems:

(a) The actual hydraulic geometry for each system,
(b) The hydraulic geometry of the model used to establish the profile factor for that system[5], and
(c) The uncertainty analysis for the system.

The objectives of the survey were to provide, for each operating system, definitive answers to two questions:

- Does the actual hydraulic geometry include non planar features that were not included in the modeling that Caldon employed to determine the profile factor for the system?
- Does the allowance for the uncertainty of the Profile Factor carried in the Uncertainty Analysis for the system bound changes that might plausibly occur in the actual hydraulic geometry, based on the data and calculations of Table 2?

The results of this review are tabulated in Appendix D. Every external LEFM installation meets the above requirements, with one exception. That exception is the WBN system previously described. The hydraulic modeling for this system did not include the non planar bends that create the swirl—they are more 10 diameters upstream of the bend which is in turn 25 diameters upstream of the external meter. Consequently, the profile factor selected for this instrument was probably low by 0.3 to 0.5%, and the uncertainty in profile factor did not bound the calculated maximum and minimum profile factors, as evidenced by the calibration error of the operating external meter.

[5] For external LEFMs in nuclear feedwater systems, Caldon establishes the Profile Factor by model tests in a certified hydraulic test facility.

To address the question of whether operational transients of the kind described in Appendix B occurred previously, when the external LEFM was used in the determination of plant power at WBN, Caldon performed a separate analysis of the operating data for the external instrument. The evaluation covered the period from the time the instrument was installed (1996) to the present. Based on this evaluation, the extreme change in profile that led to the excessive calibration error appears to have occurred only one other time in its operating history. When it occurred, the plant was in a "coastdown" prior to refueling, and operating significantly below full power. Hence, the calibration error, if present, did not cause the plant to operate above its licensed thermal power. A report of this evaluation has been forwarded to the owner of this external LEFM for his records.

As noted above, all other operating Caldon LEFMs are bounded by their existing uncertainty analyses. The reasons are summarized below:

- Some meters are installed downstream of flow conditioners[6], which prevent the compounding effect of swirl on axial profile. In these installations the uncertainty allowances for profile changes with wall roughness and the uncertainties included for the extrapolation of calibration results to plant conditions adequately bound potential profile factor changes.
- For some meter installations where non planar bends may produce swirling flow, the hydraulic model used for calibration incorporated the non planar feature (the exception here is the WBN application described above).
- For some meter installations, there is no reasonable basis to posit significant swirl. An example: the hydraulic configuration upstream of the external LEFM consists of one or more planar bends preceded by a feedwater heater in the same plane. The heater tubes in combination with the outlet waterbox act as an effective flow straightener, eliminating any disturbances due to the hydraulic configuration upstream of the heater.
- In several cases, the basic hydraulic model did not include the swirl-producing feature, but the parametric variations included in the model testing adequately describe the potential variations that swirl might bring about. For these cases, the procedure for selecting the profile factor conservatively included the biases introduced by the parametric variations, in a way that covers the potential contribution of swirl.

Summing up, the calibration testing used to select the profile factor itself was conservative, leading to a number in the middle of the likely range of variation for an application. And, for all of these installations, the uncertainty analyses included allowances for potential calibration changes due to wall roughness and other factors that are adequate to cover the range of changes implicit in the data of Table 2.

Cross Correlation Meters and Flow Nozzles

An analysis of the effects of the measured profile changes on cross correlation meters is beyond the scope of this report. As with externally mounted transit time meters, however, the axial velocity profile projected onto the diametral paths of a cross correlation meter is necessarily a determinant in its calibration. The developers of the cross correlation meter indicate that the sensitivity of a cross correlation meter to the axial velocity profile may be somewhat greater than that of an externally

[6] In these installations, the conditioners are installed upstream of the flow nozzles and are for the purpose of reducing swirl in the nozzles. The LEFM is usually located a few diameters upstream of the nozzle

mounted transit time meter[7]. The variability of the calibrations of external transit time flowmeters shown in Table 2 would therefore be expected to apply to cross correlation instruments, and may be understated in this regard.

It may reasonably be asked: If, in fact, the calibrations of external meters vary significantly in time, why have not these errors been detected in service? The answer to this question is that a small error---1 or 2% *is* a small error—is difficult to detect in an instrument when there is no standard of the requisite accuracy against which to compare it.

Typically, the indication of the external meter is compared with that of a flow nozzle. A nozzle is a very imperfect standard. The same water chemistry changes that produce the variations in wall roughness and swirl, which may bring about a noticeable change in the calibration of an external meter, can likewise affect the calibration of a nozzle. The tendency of flow nozzles to foul and, as a result, to read conservatively has been well publicized. But the unexpected presence of dynamic swirl can also alter the calibration of a nozzle. Swirls of 10 % often occur in the installations of Tables 1 and 2. Appendix E is a scoping calculation that computes the error in flow nozzles due to a 10% swirl, as a function of their beta ratios[8]. The appendix estimates that a swirl of 10% will produce a flow error of about 2% for a nozzle with a beta ratio of 0.5 and a flow error of about 0.6% for a nozzle with a beta ratio of 0.7. The beta ratios for most feedwater flow nozzles lie in this range. Because the swirl increases the differential pressure produced by a specific flow rate, the error due to it is conservative. It is entirely possible that some of the errors in flow nozzles that have been ascribed to fouling are in fact due to transient variations in swirl.

To quantify errors or correct biases in external ultrasonic instruments, whose accuracies are in the order of ± 1%, an instrument having significantly better accuracy is required. A nozzle does not meet this standard. If the calibration of an external instrument is established *in situ* using a nozzle or another external meter as a standard, the result is uncertain within the root sum square of the potential uncertainties of each of the two instruments and is probably in the order of ± 1.4%.

[7] In *Feedwater Flow Measurement Using a Cross Correlation Flowmeter*, Sherin and Zobin note that "the sensitivity to flow velocity is...less for the transit time meter" [than it is for the cross correlation meter].
[8] The beta ratio of a nozzle is the ratio of the throat diameter to the diameter of the upstream pipe.

Figure 1

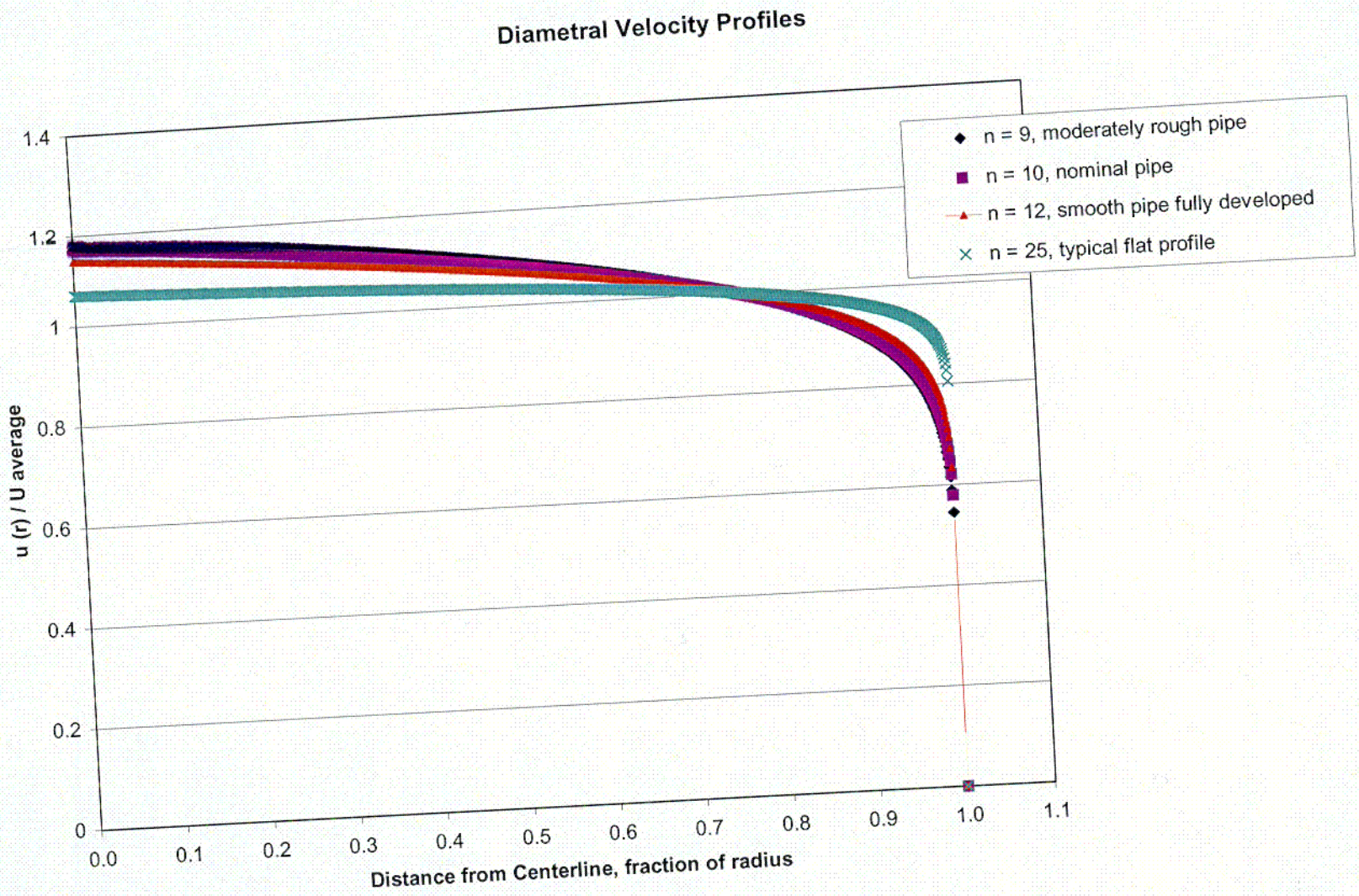
Diametral Velocity Profiles
n = 9, moderately rough pipe
n = 10, nominal pipe
n = 12, smooth pipe fully developed
n = 25, typical flat profile
u (r) / U average
1.4
1.2
1
0.8
0.6
0.4
0.2
0
0.0
0.1
0.2
0.3
0.4
0.5
0.6
0.7
0.8
0.9
1.0
1.1
Distance from Centerline, fraction of radius

C01

Figure 2

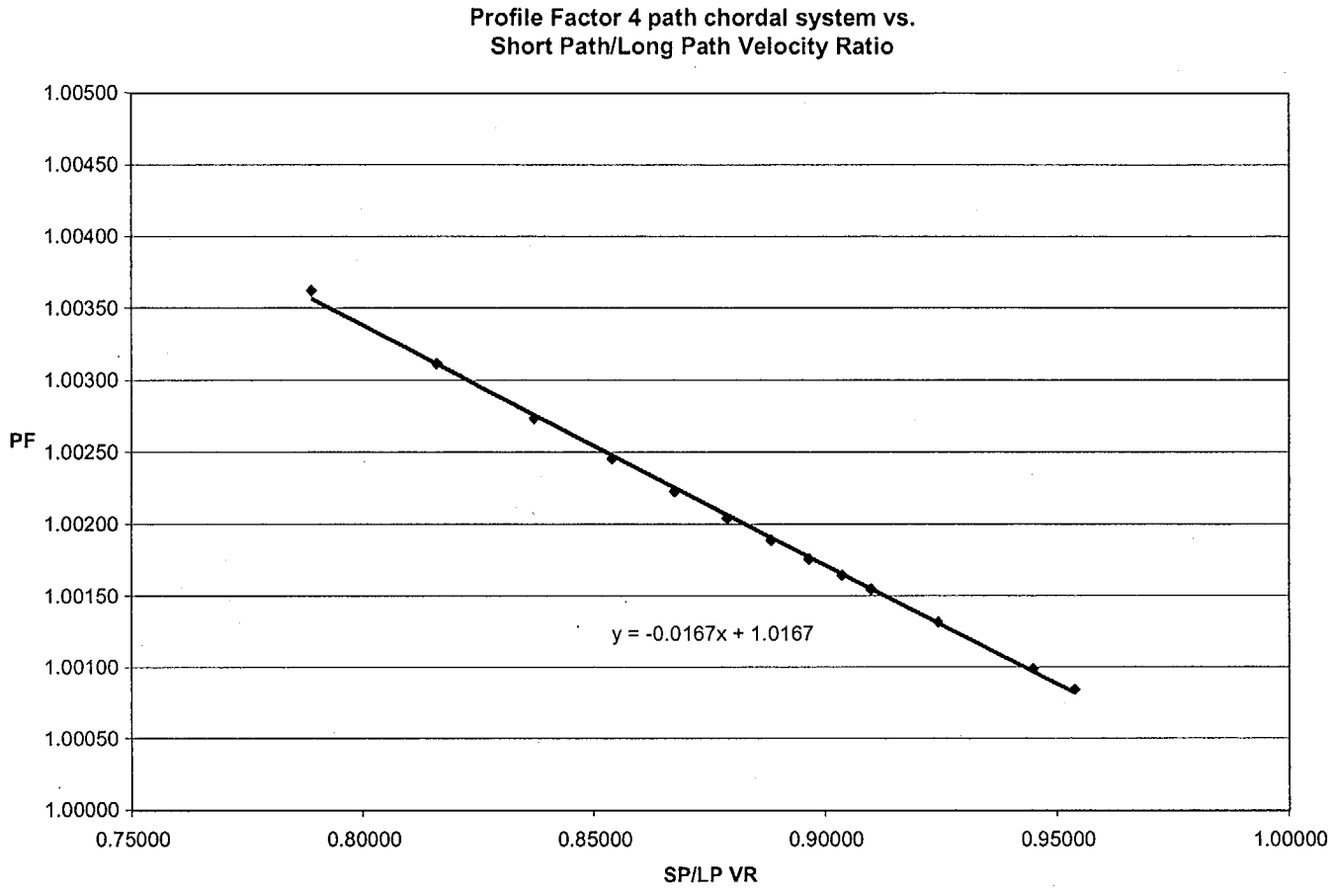
Profile Factor 4 path chordal system vs.
Short Path/Long Path Velocity Ratio
PF
1.00500
1.00450
1.00400
1.00350
1.00300
1.00250
1.00200
1.00150
1.00100
1.00050
1.00000
0.75000
0.80000
0.85000
0.90000
0.95000
1.00000
SP/LP VR
y = -0.0167x + 1.0167

Table 1
Calculated 4Path Profile Factors* versus Measured Chordal Velocity Ratios
Based on a random sample of logged data over periods of operation ranging from 2 months to several years

Plant/Unit		Hydraulic Geometry	Max SP/LP VR+	Min SP/LP VR+	4Path Chordal PF		
					Max	Min	Δ
WBN 1		LEFM Check 45D downstream of single 90 ^{0} bend. 3 HP heater feeds upstream of bend include non planar reverse bend	0.892	0.854	1.0024	1.0018	0.0006
SSES 2	Loop A	Three loops similar.	0.894	0.864	1.0023	1.0018	0.0005
	Loop B	LEFM Check ~13D	0.837	0.827	1.0029	1.0027	0.0002
	Loop C	downstream of single 90 ^{0} bend. Non planar 90 ^{0} bend 11 to 12 diameters upstream.	0.830	0.822	1.0030	1.0028	0.0002
IP 2	Loop 21	LEFM in each loop	0.894	0.884	1.0019	1.0018	0.0001
	Loop 22	between 10 and 15D	0.931	0.883	1.0020	1.0012	0.0008
	Loop 23	downstream of 90 ^{0} bend	0.916	0.874	1.0021	1.0014	0.0007
	Loop 24	with nonplanar 90 ^{0} bend 10D upstream	0.939	0.917	1.0014	1.0010	0.0004
IP 3	Loop 31	LEFM in each loop 6D	0.940	0.921	1.0013	1.0010	0.0003
	Loop 32	downstream of 90 ^{0} bend	0.925	0.916	1.0014	1.0012	0.0002
	Loop 33	with nonplanar 90 ^{0} bend	0.952	0.932	1.0011	1.0008	0.0003
	Loop 34	10D upstream	0.976	0.952	1.0008	1.0004	0.0004
CP 1		LEFM in each unit 11 D	0.918	0.914	1.0014	1.0014	0.0000
CP2		downstream of 90 ^{0} bend Non planar feed ~ 18 diameters upstream.	0.909	0.908	1.0015	1.0015	0.0000

Continued next page

Table 1 continued

Plant/Unit	Hydraulic Geometry	Max SP/LP VR	Min SP/LP VR	4Path Chordal PF		
				Max	Min	Δ
PI 2 Loop 21 Loop 22	LEFM in each loop~20D downstream of 90 ^{0} bend. Each loop is fed from the branches of a non planar symmetrical lateral ~ 4 diameters upstream of bends	0.881 0.880	0.864 0.868	1.0023 1.0022	1.0020 1.0020	0.0003 0.0002
BV 1 BV 2	U1 LEFM ~6 D downstream of header, 2 non planar feeds upstream (U1) U2 LEFM ~10 D downstream of header, 2 non planar feeds upstream (U1)	0.926 0.920	0.922 0.915	1.0013 1.0014	1.0012 1.0013	0.0001 0.0001

Mean Profile Factor Variation (Δ) **0.0003**
± 1 Standard Deviation **± 0.0002**

Notes

*A Profile Factor is the calibration coefficient for an ultrasonic meter. It is sometimes referred to as a "velocity profile correction factor" and is equivalent to the discharge coefficient of a flow nozzle.
+ SP/LP VR is the ratio of the average velocity projected onto the short chords (or paths) to the average velocity projected onto the long chords.

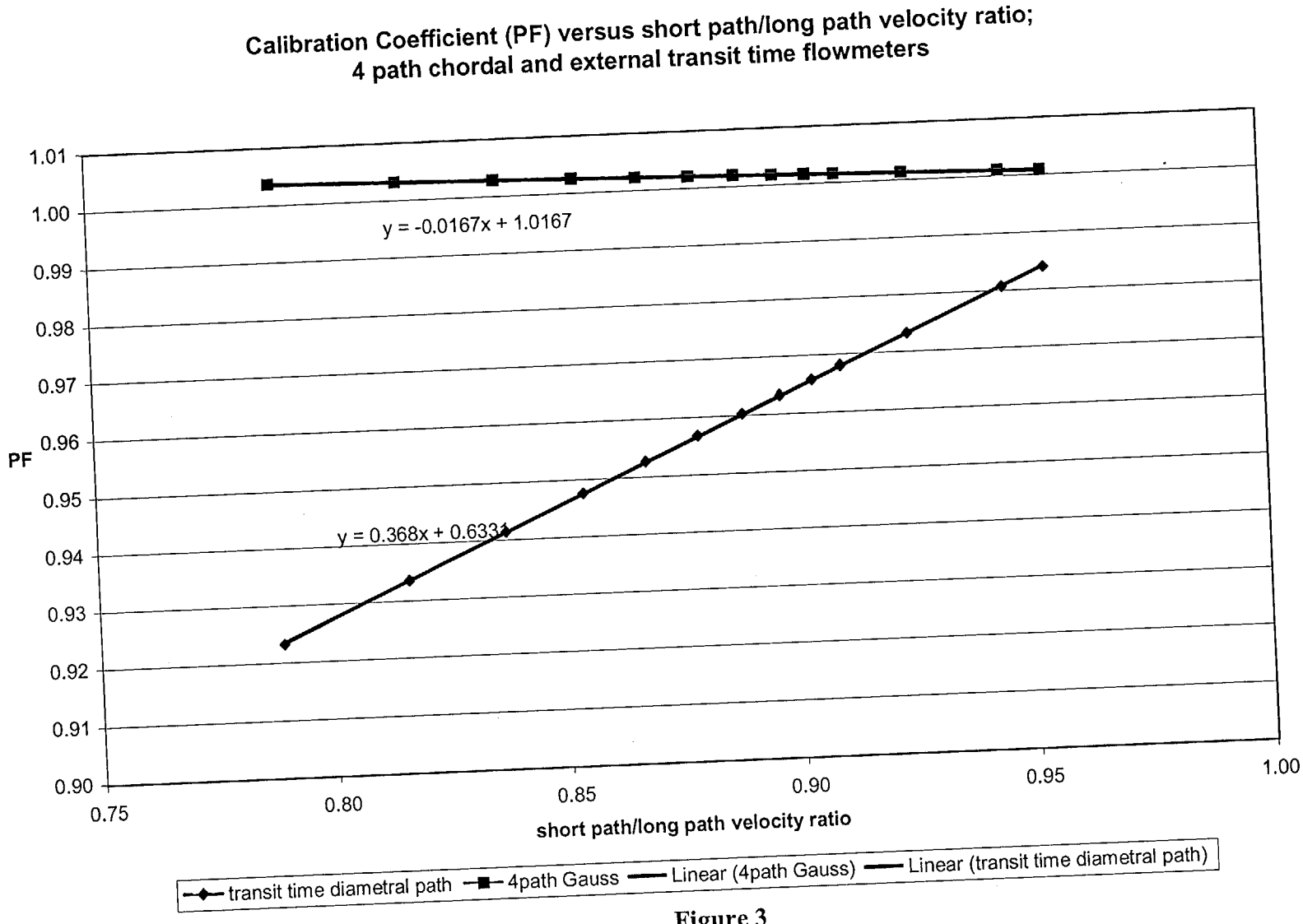
Calibration Coefficient (PF) versus short path/long path velocity ratio;
4 path chordal and external transit time flowmeters
1.01
1.00
0.99
0.98
0.97
0.96
0.95
0.94
0.93
0.92
0.91
0.90
PF
y = -0.0167x + 1.0167
y = 0.368x + 0.6331
0.75
0.80
0.85
0.90
0.95
1.00
short path/long path velocity ratio
transit time diametral path
4path Gauss
Linear (4path Gauss)
Linear (transit time diametral path)

Figure 3

Table 2
Calculated Single Path Profile Factors* versus Measured Chordal Velocity Ratios
Based on a random sample of logged data over periods of operation ranging from 2 months to several years

Plant/Unit		Hydraulic Geometry	Max SP/LP VR+	Min SP/LP VR+	Diametral Path PF		
					Max	Min	Δ
WBN 1		LEFM Check 45D downstream of single 90 ^{0} bend. 3 HP heater feeds upstream of bend include non planar reverse bend	0.892	0.854	0.961	0.947 **	0.014 ***
SSES 2	Loop A Loop B Loop C	Three loops similar. LEFM Check ~13D downstream of single 90 ^{0} bend. Non planar 90 ^{0} bend 11 to 12 diameters upstream.	0.894 0.837 0.830	0.864 0.827 0.822	0.962 0.941 0.939	0.951 0.937 0.936	0.011 0.004 0.003
IP 2	Loop 21 Loop 22 Loop 23 Loop 24	LEFM in each loop between 10 and 15D downstream of 90 ^{0} bend with nonplanar 90 ^{0} bend 10D upstream	0.894 0.931 0.916 0.939	0.884 0.883 0.874 0.917	0.962 0.976 0.970 0.979	0.958 0.958 0.955 0.971	0.004 0.018 0.015 0.008
IP 3	Loop 31 Loop 32 Loop 33 Loop 34	LEFM in each loop 6D downstream of 90 ^{0} bend with nonplanar 90 ^{0} bend 10D upstream	0.940 0.925 0.952 0.976	0.921 0.916 0.932 0.952	0.979 0.974 0.983 0.992	0.972 0.970 0.976 0.983	0.007 0.004 0.007 0.009
CP 1 CP2		~LEFM in each unit 11 D downstream of 90 ^{0} bend Non planar feed ~ 6 diameters upstream.	0.918 0.909	0.914 0.908	0.971 0.967	0.969 0.967	0.002 0.000

Continued, next page

Table 2, continued

Plant/Unit	Hydraulic Geometry	Max SP/LP VR	Min SP/LP VR	Diametral Path PF		
				Max	Min	Δ
PI 2 Loop 21 Loop 22	LEFM in each loop~20D downstream of 90 ^{0} bend. Each loop is fed from the branches of a non planar symmetrical lateral ~ 4 diameters upstream of bends.	0.881 0.880	0.864 0.868	0.957 0.957	0.951 0.953	0.006 0.004
BV 1 BV 2	U1 LEFM ~6 D downstream of header, 2 non planar feeds upstream (U1) U2 LEFM ~10 D downstream of header, 2 non planar feeds upstream (U1)	0.926 0.920	0.922 0.915	0.974 0.972	0.972 0.970	0.002 0.002

Mean Profile Factor **0.964**
Mean Profile Factor Variation (Δ) **0.007**
± 1 standard deviation **± 0.005**

Notes

* A Profile Factor is the calibration coefficient for an ultrasonic meter. It is sometimes referred to as a "velocity profile correction factor" and is equivalent to the discharge coefficient of a flow nozzle.
+ SP/LP VR is the ratio of the average velocity projected onto the short chords (or paths) to the average velocity projected onto the long chords.
** A Profile Factor of 0.953 was employed on an external (Diametral Path) ultrasonic meter installed 20D upstream of the LEFM Check (i.e., 25D downstream of the bend).
*** The indication of the external meter installed at 25 diameters downstream of the bend shifted about 1.6% relative to the indication of the 4 path chordal instrument during an operational sequence when the chordal velocity ratio changed from its minimum to its maximum value. Allowing for a change in the calibration of the 4 path meter of 0.06%, the net calibration change measured for the external meter at 25D was about 1.5%, a figure entirely consistent with the 1.4% calculated from the change in the measured chordal velocities.

A. Enclosure to letter, Susquehanna Benchmark Alarm Evaluation and Recommendations, *Evaluation of Velocity Profile Change at SSES Unit 2*, dated October 16, 2001

CALDON

Evaluation of Velocity Profile Change at SSES Unit 2

Summary

On October 6, 2001, a Profile Test (Benchmark Velocity) alarm occurred for the Loop A subsystem of the LEFM Check installed at Susquehanna Unit 2. This alarm occurs when the velocity measured on any one of the 4 paths, normalized to the average velocity and weighted according to its contribution to the total flow result, differs from a reference value by more than a preset amount (± 0.5% was the allowable deviation in weighted path velocity at the time of the alarm). A reference value for the velocity in each path was established at commissioning. The purpose of the alarm is to alert the user of the LEFM that the velocity profile may have changed from that which prevailed when the instrument's calibration was established.

When the alarm occurred, there was concern that the meter may have been malfunctioning. A review of the data shows, however, that the meter was performing exactly in accordance with its specifications and that, in fact, a significant profile change had occurred in Loop A. An evaluation of the profile data shows:

(1) The profile change was transient in nature, and
(2) The (temporary) potential calibration error introduced by the profile change was no greater than about 0.1% and was in fact conservative. That is, the true flow was probably slightly lower than the indicated flow (by no more than 0.1% of reading) during the period when the profile was altered. [It should be noted that, because of the alarm, the plant was not using the LEFM to determine power, but, in accordance with its procedures, was using the venturi nozzles.]

In summary, this evaluation shows that the LEFM was operating within its design basis during the period when the Loop A profile differed from the reference. Because it appears possible that similar profile changes may occur again (see the discussion below), revised alarm settings will be implemented, to prevent these anticipated profile changes from causing the alarm in the future. The revised settings will still ensure that profile changes that could cause calibration errors larger than the design basis will be alerted.

Discussion

The change in the velocity profile seen by the LEFM in the A Loop at SSES was probably produced by a decrease in the relative roughness of the upstream piping system. This decrease in roughness resulted in an increase in the swirl velocity seen by the Loop A LEFM. Swirl is typically produced by non planar changes in flow direction. The hydraulic geometries of loops A, B, and C in Susquehanna Unit 2 are very similar, but a swirl is present at the Loop A LEFM location, while none is present in Loop B or C. When the Loop A LEFM was commissioned, the tangential velocity of the swirl was modest—a tangential velocity of about ± 4% of the axial velocity at the outside (short) paths (an 8% difference in path velocities) and less than ± 1% at the inside (long) paths. This pattern persisted for the months following commissioning.

The change in profile that initiated the velocity alarm occurred on October 6, 2001. On this date, a reduction in power to about 75% power appears to have brought about plant chemistry and/or flow changes that reduced the roughness in the feedwater piping upstream of the loop A LEFM. A reduction in roughness causes a flattening of the profile in and of itself, but for a plausible roughness change—say, a factor of 2—the amount of flattening would not be as great as the data show[+]. However, a reduction in roughness also increases the velocity of the swirl at the LEFM location (because the rate of dissipation of the swirl in the straight pipe upstream of the LEFM is diminished). The centripetal force produced by the high tangential velocity causes fluid traveling at high axial velocity to migrate to the outside of the pipe, further flattening the profile.

These changes can be seen in Figures 1A, 1B, and 1C. The change in axial velocity profile is characterized by the data plotted in Figure 1A. The figure shows the ratio of the average short (outside) path velocity to the average long (inside) path velocity. A swirling (tangential) velocity component tends to add to the axial velocity component on paths on one side of the pipe centerline and subtract from the axial component on the other side. Hence the ratio of the *average* short path velocity to the *average* long path velocity measures what the axial profile would have been in the absence of swirl. It will be seen in Figure 1A that the axial profile flattens abruptly between 132 and 133 hours[*] --the ratio increases from roughly 0.87 to 0.89. This change is coincident with a reduction in power and feedwater flow to about 75% of rating (the velocity profile alarm occurred somewhat later, because of the long term averaging used in its implementation).

Simultaneously with the flattening of the profile, the swirl velocities on the short and long paths increase abruptly, as seen in Figures 1B and 1C. These figures look at the normalized *difference* in the velocities measured by the outside paths and the inside paths. They indicate that the angular velocity of the swirl roughly doubled coincident with the down power. The swirl velocity is one half of the difference; Figure 1B indicates a swirl of about ± 4% increasing to over ± 7% in the outside paths

The velocity profiles seen by the LEFMs in loops B and C show little or no change with the reduction in flow and power at 133 hours. This can be seen from the data of Figures 2A and 3A. These profiles are more "round shouldered" than the profiles of loop A—their short-to-long path velocity ratios are about 0.83 versus 0.87 on loop A before the down power. This is probably because there is very little swirl present at these locations, as can be seen in Figures 2B and 3B. It is therefore not surprising that there is little change evident on these figures with the down power. [The velocity differences of the inside paths for loops B and C have not been plotted; they show smaller transverse velocity components than do the outside paths.]

Figures 1A, 1B and 1C show the change in A loop profile brought about by the down power gradually disappearing in the hours following the return to full flow. This response suggests that the change in profile was caused by a change in wall roughness brought about by a water chemistry transient coincident with the down power. A change in feedwater chemistry is inherent with the

[+] A reduction in relative roughness from 0.0002 to 0.0001 would cause about half as much flattening as occurred on October 6.

[*] 132 hours corresponds to 11:37 AM on October 6. The down power appears to begin an hour earlier.

change in final feed temperature that accompanies a power reduction[#]. Additionally, heater drains, which can alter the dissolved and undissolved content of the feed, may be redirected during such transients[**]. Changes in profile of the kind observed at Susquehanna have been seen in several other plants, and will be the subject of a Caldon Bulletin, to be issued in the near future.

It may be demonstrated that the (temporary) and limited flattening of the profile, as occurred during the transient of Figure 1, causes a 4 path LEFM to read conservatively by about 0.1%[***] The uncertainty analysis for the LEFM includes an allowance for profile factor (calibration) uncertainty that encompasses changes of this kind. Hence, the LEFM in Loop A at SSES was at all times operating within its design basis.

Changes to the velocity profile alarm settings for loop A should be implemented to prevent unnecessary alarms should such profile changes occur in the future. To select a revised profile test setpoint while retaining assurance that path velocity changes which could represent a profile outside the LEFM design basis would be alarmed, path velocities measured during calibration testing of the SSES spool pieces at Alden Research Labs were examined. These tests encompassed a several hydraulic geometries, including several orientations of the spools with respect to the upstream bend, and straight pipe. For each hydraulic geometry, the profile factor (calibration coefficient) for the spool was measured, as well as the path velocities, over a range of flows. The data for the Loop A spool show that, over all hydraulic geometries, the span in the calibration coefficient was about 0.2% (i.e., ±0.1%). Although the calibration remained nearly constant, the changes in geometry caused path velocity changes of as much as 3% on the inside (long) paths and 9 to 10% on the outside (short) paths. In computing the velocity change needed to initiate a profile alarm path velocities are weighted according to their contribution to the flow calculation. The weighting factors are, approximately, 0.11 for the short paths and 0.39 for the long paths. When the weighting factors are applied to the changes measured during calibration testing, a Profile Test alarm setting of at least 1.2% (more than twice the setting on October 6) is justified. This setting for the Profile Test alarm will provide the necessary protection without false actuations (the maximum weighted path velocity change seen in the transient of October 6 was only slightly above the setting at the time, 0.5%). To ensure that the profile protection is effective at or near plant rating, a setting for the profile alarm-enabling threshold of 90% full flow is recommended. At lower flows, the LEFM will deliver a flow measurement accuracy of ± 0.4% of rating or better, even if weighted velocity changes greater than 1.2% occur. SSES calibration data, as well as other spool calibration data show that even extreme changes in profile are

---

[#] Examination of the LEFM data through October 12 (beyond the range of the Figures) shows the gradual return continuing until a down power on October 12. When this occurred, the Loop A profile, which was still slightly flatter than originally, abruptly returned to its original shape. The response shows that down powers can lead to both smoothing and roughening of the loop A piping.

[**] Plant personnel have suggested the following, plausible explanation: Reactor water level at SSES is controlled by changing the speed of the feed pumps in Loops A, B, and C. Different settings are employed for each of the feed pump governors—Loop A pump is the "lead" pump, while the pumps for Loops B and C are "followers". All small adjustments to flow are made by the A pump. This response was seen in the data of the October 6 transient; the change in flow in the A Loop was larger and more "busy" than either of the other loops. This control arrangement has prevailed since startup. The constantly changing flow in A loop may be responsible for a corrosion layer having a different and smoother character than the other loops.

[***] Calculation and experimental verification on file at Caldon. The theoretical maximum change for a fully developed profile at a Reynolds number of 3×10^7 is about 0.2%. That is, if the full developed profile suddenly became flat, the LEFM would read high by 0.2%.

unlikely to cause calibration changes of more than 0.3 to 0.4% *of reading*. Hence, calorimetrics can be performed at all power levels below 90% with excellent accuracy, without the profile alarm.

Figure 1A

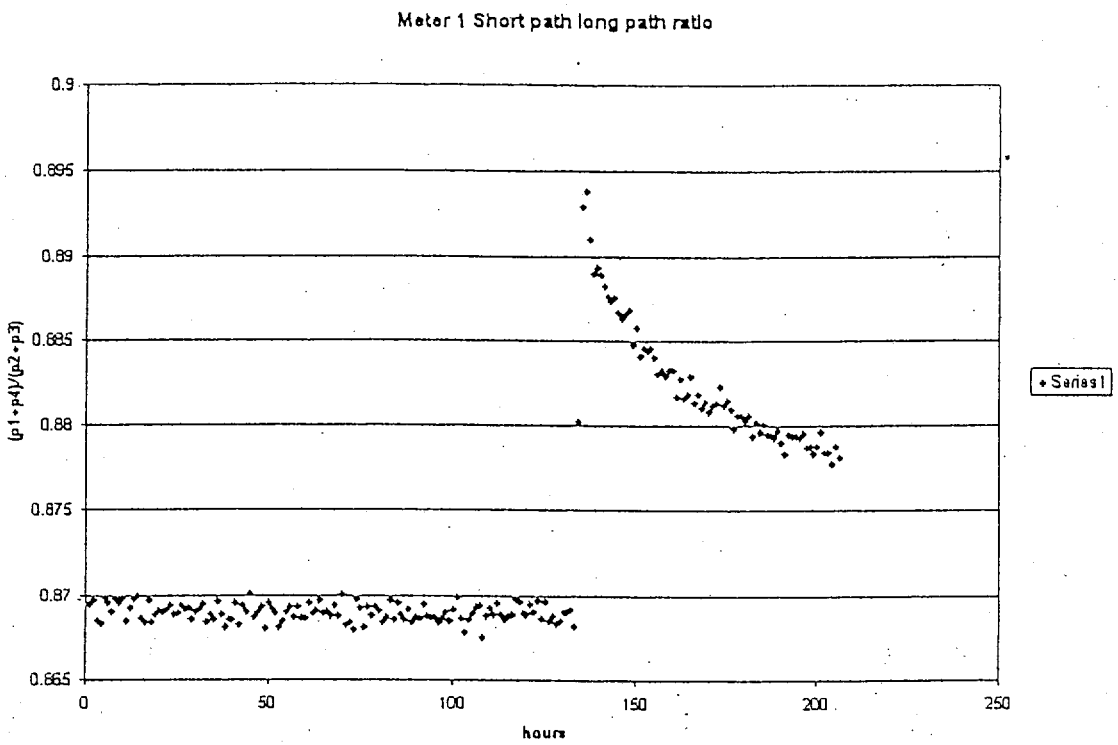

Figure 1B

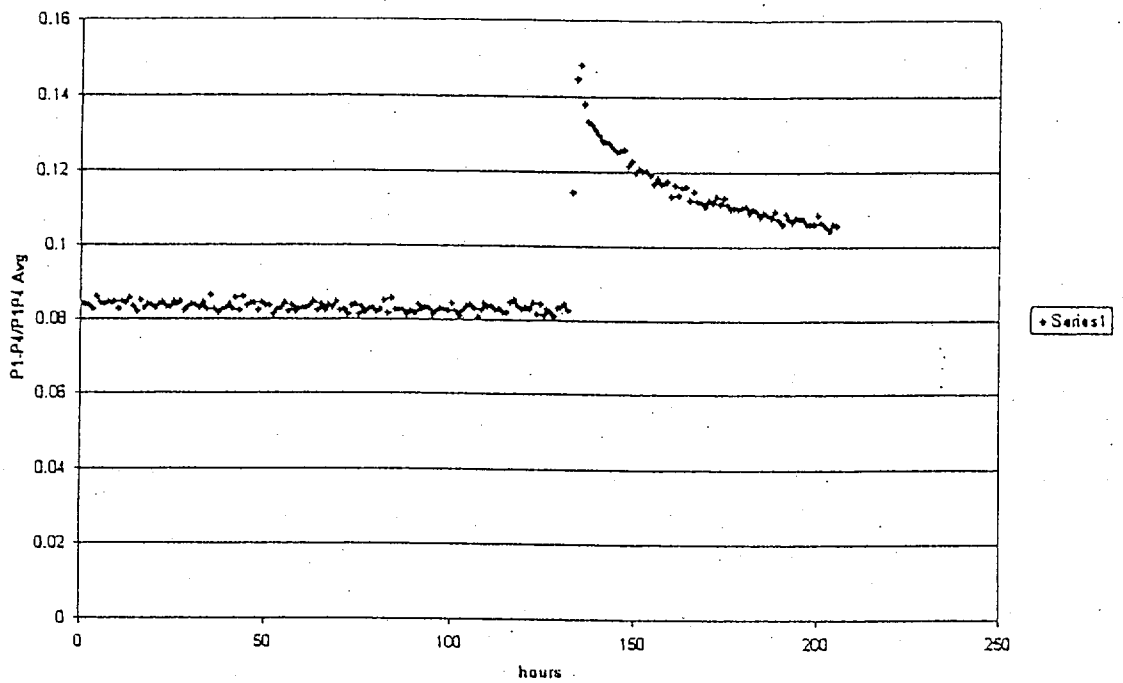

Figure 1C

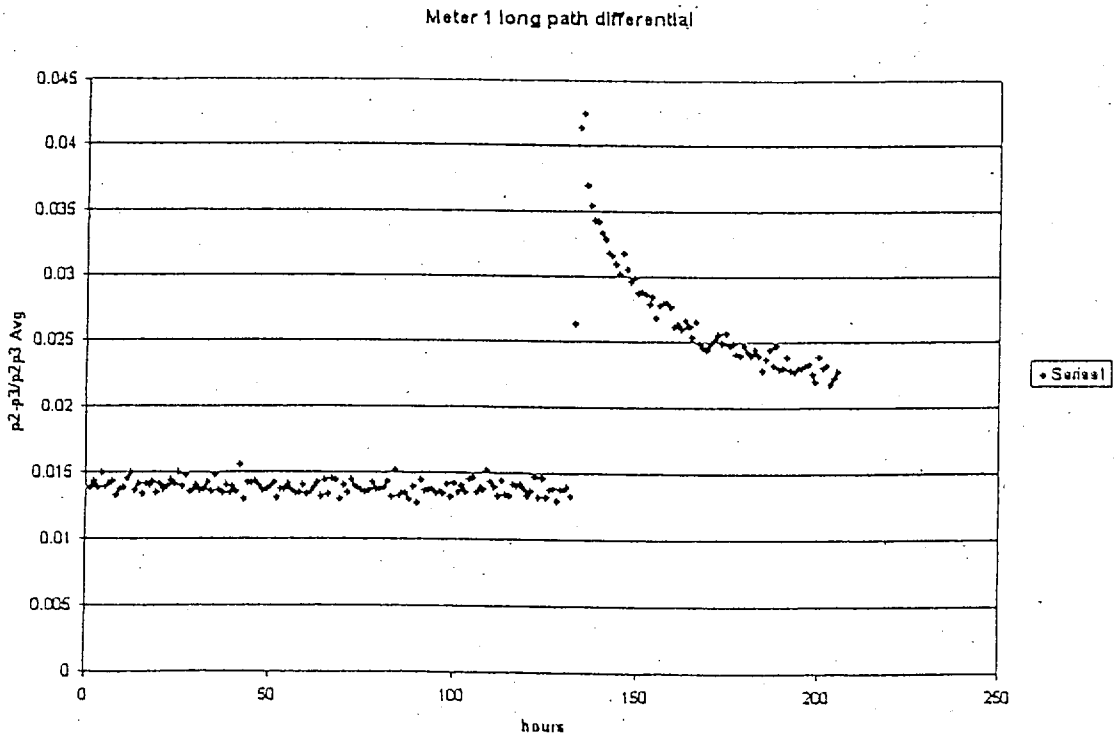

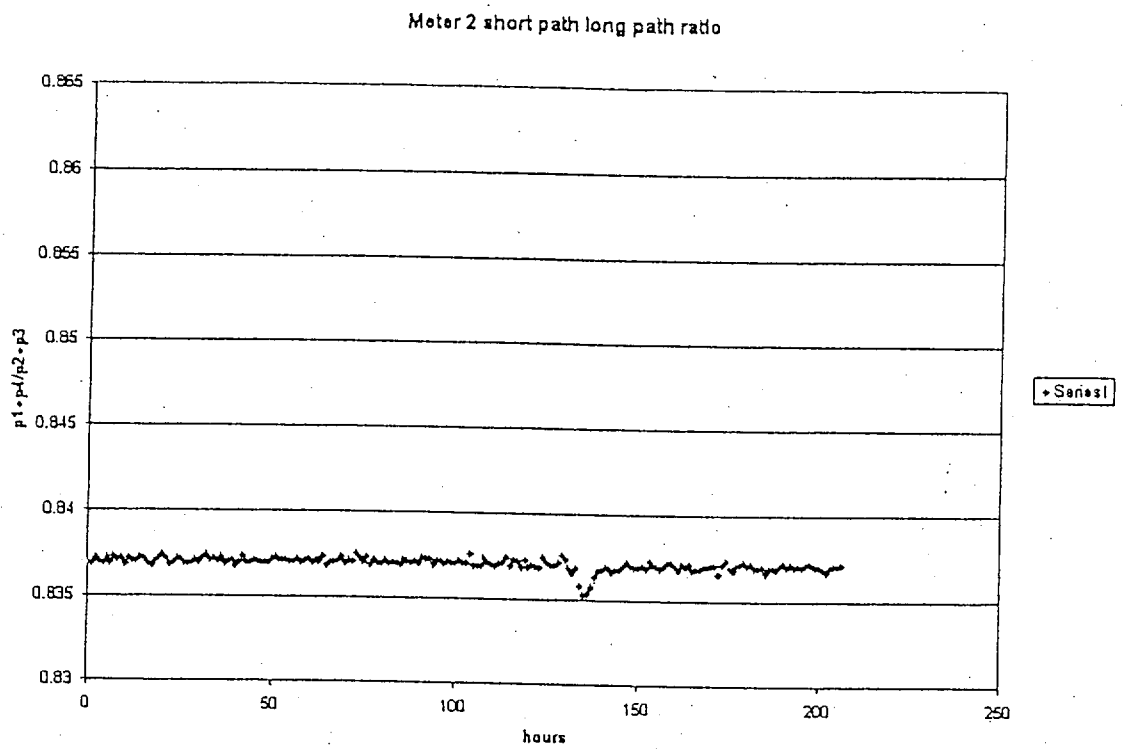

Figures 2A and 2B

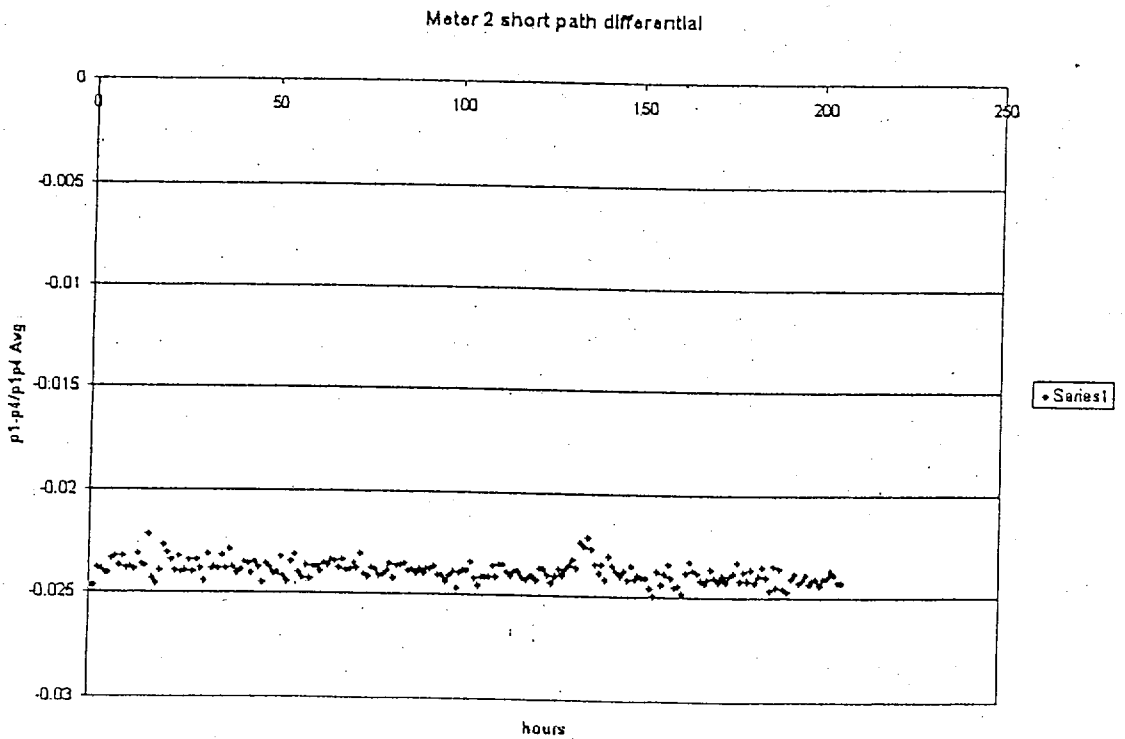

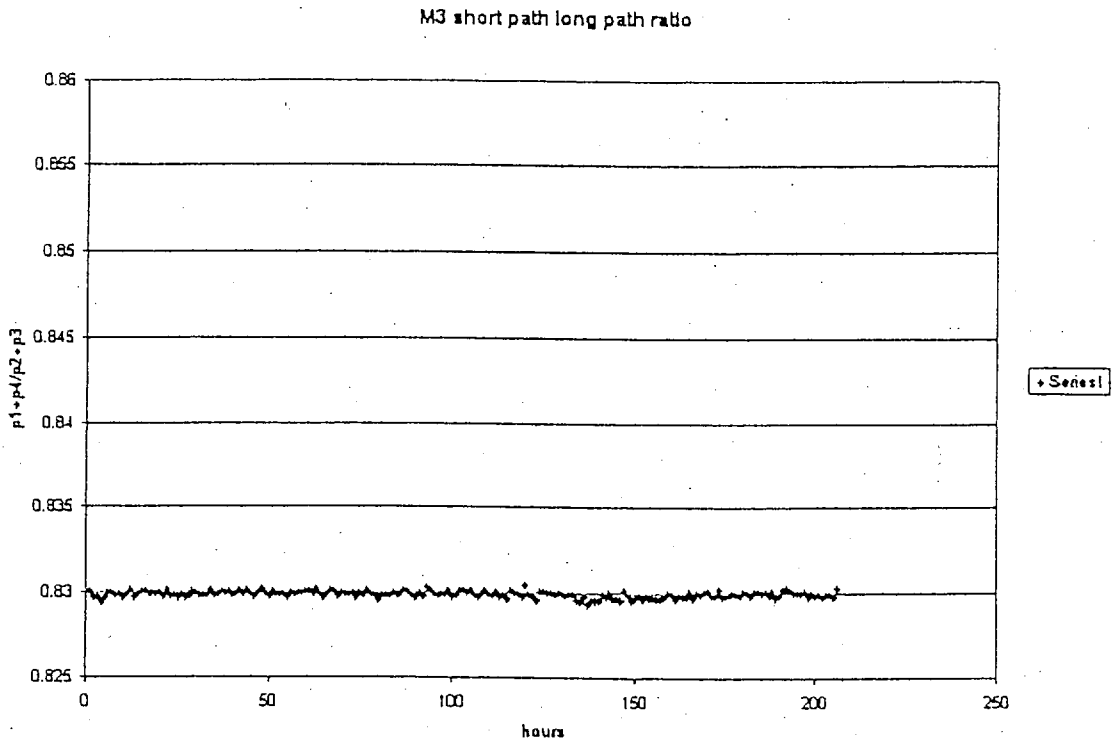

Figures 3A and 3B

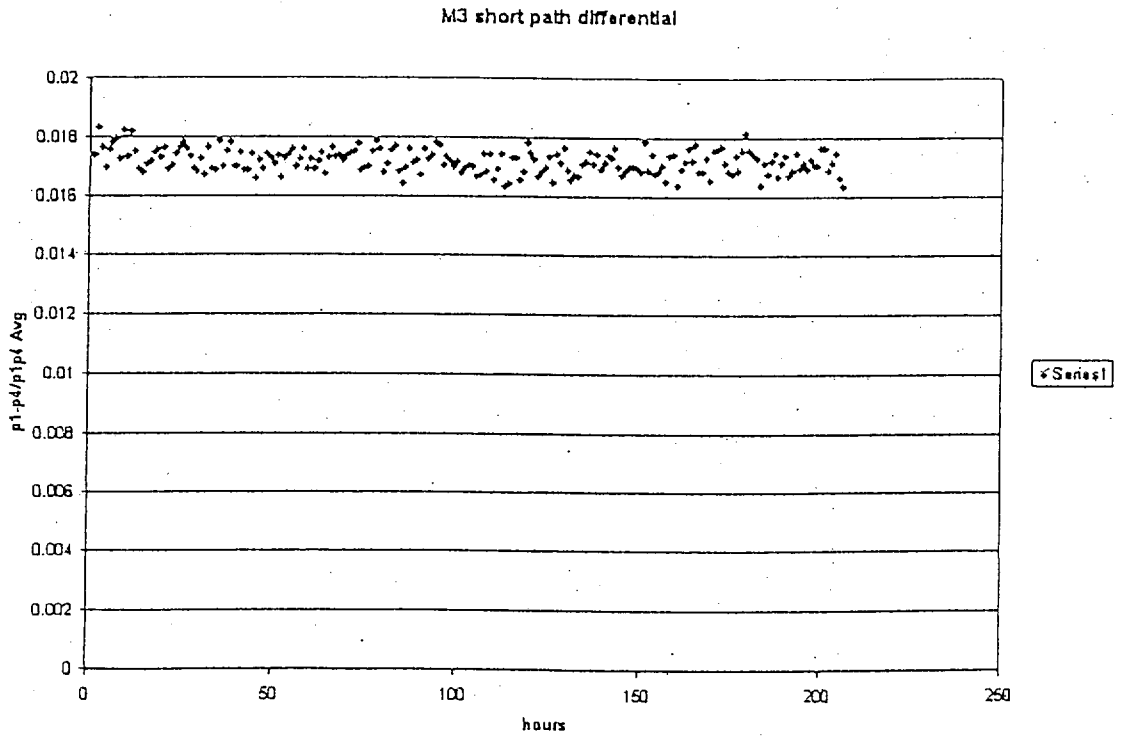

B. Letter, H. Estrada, Caldon to Ms. Debra Echols, Tennessee Valley Authority, dated September 7, 2001,"Change in Velocity Profile Measured by the WBN LEFM [Check]"

Caldon, Inc.

September 7, 2001

Ms. Debra Echols (for distribution)
Tennessee Valley Authority
Watts Bar Nuclear Power Station

Subject: Change in Velocity Profile Measured by the WBN LEFM Check

Dear Ms. Echols:

This letter provides Caldon's evaluation of the effect, on the accuracy of the LEFM Check, due to the change in the fluid velocity profile recently seen by this instrument. The change in profile was observed following restart after a plant trip, and was sufficient to trigger the LEFM Check velocity profile alarm. The alarm is intended to alert users of the LEFM Check that the velocity profile has changed significantly from that measured at the instrument's commissioning. The profile measured at commissioning is, in turn, compared with that measured during calibration testing of the LEFM Check, to ensure applicability of the calibration in the field. It is Caldon's practice, when a user reports a profile alarm, to evaluate the specifics of the change, to ensure that the calibration for the meter still applies and that its uncertainty is within its design basis. It should be noted that profile alarms are unusual, but have occurred in 2 or 3 chordal systems currently in service.

The LEFM Check at Watts Bar is installed in a 32 inch header about 45 diameters downstream of a single 90 ^{0} bend. High pressure feedwater heaters feed the header upstream of the bend. The velocity profile data for Watts Bar, recorded before the plant trip and following the profile alarm are given in the table below. Velocities are normalized to the velocity averaged over the pipe cross section. V1 and V4 are the velocities measured along the two outside (short) chords of the LEFM Check; V2 and V3 are measured along the two inside (long) chords.

	V1	V2	V3	V4	V_{SHORT}/ V_{LONG} (average)
Profile before plant trip	0.86	1.03	1.04	0.90	0.85
Profile with alarm	0.82	1.00	1.05	1.01	0.89

The profile before the trip is typical of developed flow in a straight pipe. The slight asymmetry in the profile before the trip (V3 and V4 are slightly larger than V2 and V1) is believed to be due to a very small swirl residual from the interaction of the velocity profile distortion produced by the heater discharge lines and the bend upstream of the LEFM Check.

1070 Banksville Avenue • Pittsburgh, PA 15216
Tel: 412-341-9920 • Fax: 412-341-9951 • Web: www.caldon.net

The swirl has increased following the trip, based on the increased asymmetry of V3 and V4 versus V1 and V2, though it is still small (about 9% of the axial velocity near the outer pipe wall). The swirl is centered in both cases and produces no error in the LEFM Check reading.

The overall shape of the profile following the trip is flatter than it was before the trip. This is the reason that the ratio of the average short path velocities to the average long path velocities increases from 0.85 to 0.89. A profile of this short path/long path ratio is not unusual, but is characteristic of developed flow at high Reynolds Number in *very smooth pipe.* It appears that the trip, and the subsequent operation of the feedwater system removed some or most of the rough corrosion film from the 45 diameters of pipe upstream of the LEFM Check, thereby producing a flatter profile and reducing the rate at which the swirl produced by the bend is dissipated. It is understood that condenser vacuum was maintained during the shutdown and the feedwater system was operated in a "long recycle" configuration throughout the period. This operating history, coupled by the sudden temperature change inherent in the shutdown, is consistent with the scale removal hypothesis.

The flatter profile does not significantly change the calibration of the LEFM Check, nor does it change the uncertainties associated with the calibration. In fact, the present meter factor is likely to be slightly conservative (less than 0.1%). Accordingly, we recommend that operation using the LEFM Check for thermal power computations be resumed. Because the change in profile is likely to persist for a long period—the rough film will likely take months or years to reform, if it reforms at all—we recommend that the settings of the velocity profile alarm be revised. Data for these revised settings will be provided under separate cover.

Sincerely

Herb Estrada
Chief Engineer

Cc: Ernie Hauser
Cal Hastings
Don Augenstein
Ed Madera
Ryan Hannas

C. Calculation: ***Determination of Axial Velocity Profiles from Chordal Velocity Measurements*****, dated October 31, 2001.**

CALDON, INC.
ENGINEERING REPORT: ER-262
APPENDIX C

CALCULATION
DETERMINATION OF AXIAL VELOCITY PROFILES FROM CHORDAL VELOCITY MEASUREMENTS

Prepared By: Herb Estrada
Reviewed By: Ernie Hauser

PROPRIETARY
This document contains information proprietary to Caldon, Inc. It may not be reproduced, transmitted, disclosed or used by any recipient without express written authorization of Caldon, Inc.

Calculation
Determination of Axial Velocity Profiles from Chordal Velocity Measurements

A. Purpose

The purpose of this calculation is to describe the methodology whereby the velocity measurements of 4 path chordal transit time flowmeters in a specific hydraulic geometry can be used to determine the mean velocity along a diametral path in that same hydraulic geometry. The calculation also describes how these data can be used to compute calibration coefficients for 4 path chordal systems and for external (diametral path) systems.

B. Assumptions

1. Any swirl that may be present is centered. The 4 paths of a chordal system (two long, inside paths and two short, outside paths) are parallel to each other and are symmetrical with respect to the pipe centerline. When the swirl is centered, the swirl (tangential) velocity projections on each of the two acoustic paths on one side of the centerline are equal and opposite to the components projected onto the two acoustic paths on the other side of the centerline. The contribution to the path velocity readings can be determined from the difference in path velocities, and the axial profile shape can be determined by averaging the velocities measured on inner chords and the velocities measured on outer chords. Experimental data indicate that the centripetal forces associated with swirling flow tend to center the swirl in about 15 diameters of straight pipe.[1] Furthermore, Caldon practice is to orient the acoustic paths normal to the plane of the last bend, which orientation leads to a symmetrical profile in even shorter lengths (about 5 diameters).[2]
2. Axial velocity profiles at chordal flowmeter locations can be characterized by the ratio of the measured axial short path (outside chord) velocity to the average long path (inside chord) velocity (i.e., the swirl contribution has been removed). From these data the velocity as a function of local radius over the pipe cross section can be fitted using the inverse power law by varying the exponent. The justification for this procedure is based on the work of Nikuradse and others on flow in smooth and rough pipe[3].

C. Summary

Figure 1 presents the relationship between the profile factor for a 4 chord (4 path) ultrasonic transit time system, calculated using an inverse power law fit of short and long path velocities, and the ratio of average short path velocity to average long path velocity (SP/LP VR).

Figure 2 presents the relationship between the profile factor for a single (diametral) path ultrasonic system, also calculated using an inverse power law fit of short and long path velocities, and the ratio of average short path velocity to average long path velocity (SP/LP VR).

---

[1] Murakami et al, *Studies on Fluid Flow in Three Dimensional Bend Conduits,* JSME Bulletin, Vol. 12, No. 54, December 1969

[2] Westinghouse Oceanic Division Report OEM 78-40, February 1979, G.P. Erickson and P.G. Spink

[3] *Boundary Layer Theory*, Dr. H. Schlichting, McGraw Hill, Sixth Edition, Chapters XIX and XX

Table 1 provides average short path velocity to average long path velocity ratios (SP/LP VRs) characterizing the variations in chordal path data measured at 18 chordal installations. The Table also includes the calculated variations in calibration (Profile Factor) for 4 chord systems and diametral path systems experiencing the profile variations tabulated. The calculated calibration variations are based on linear fits of the curves of Figures 1 and 2.

D. Calculation

1. Symmetrical axial profiles can be described using the so called inverse power law which represents the spatial axial velocity distribution in a pipe of circular cross section as follows:

$$u / U = (y / R)^{1/n}$$

Where u is local fluid velocity,
U is the fluid velocity at the centerline,
y is the distance from the pipe wall,
R is the internal radius of the pipe, and
n is an empirically determined exponent.

The inverse power law was used extensively by Nikuradse and others to fit flow profiles over a wide range of Reynolds Numbers in rough and smooth pipe, in the development of the methodology for calculating friction losses in turbulent flow[4].

2. The mean axial velocity through the pipe (i.e., the local axial velocity averaged over the pipe cross section) is given by:

$$u_{AVG} = \int u(r)\, dA / \int dA$$

Here the local radius, $r = R - y$, and
The incremental area, $dA = 2\pi r\, dr$

Using the relationship of paragraph 1 and writing the integral in terms of y

$$u_{AVG} = -(U/\pi R^2) \int (y/R)^{1/n} \times 2\pi (R - y)\, dy$$

Where the integration is performed from R to zero.

This integration yields the following relationship between the mean axial velocity u_{AVG} and the centerline velocity U:

$$U = u_{AVG} [1 + 1.5 / n + 0.5 / n^2]$$

For a given n, then, the centerline velocity can be computed from the expression above.

[4] *Boundary Layer Theory*, op. cit.

A selection of n also allows the computation of the mean velocity along any chordal path within the pipe. Rectilinear coordinates will be employed. The x axis will be defined as parallel to the chord and passing through the pipe centerline. The y axis will be defined as perpendicular to the chord and passing through the pipe centerline. [NOTE: The coordinate y does not correspond to the variable of integration in paragraphs 1 and 2.] The y coordinate defines the specific chordal location relative to a centerplane defined by the x axis and the axial centerline of the pipe. Three specific y coordinates are of interest:

- For the short (outside) chords in Gaussian quadrature integration using Legendre spacing, $y_1 = 0.861R$
- For the long (inside) chords in Gaussian quadrature integration using Legendre spacing, $y_2 = 0.340R$
- For the diametral chord inherent in any externally mounted ultrasonic meter, $y_3 = 0.000R$

At any location, x, along the chord at y_i a local radius, r can be computed:

$$r = [\, x^2 + y_i^2 \,]^{1/2}$$

For the selected n, the local velocity u (r) at this location can then be computed using the relation of paragraph 1

$$u(r) = U\,(1 - r / R)^{1/n}$$

The mean velocity measured at any chord is:

$$u_{CHORD} = \int u\,(x, y_i)\,dx \,/ \int dx$$

This integration is performed numerically by dividing the chord length into increments Δx. Increments of 0.001 of the chord length X were used. Here

$$X = [\, R^2 - y_i^2 \,]^{1/2}$$

Note that the integration process is carried out over only half of the total chordal length. That is, it is performed from 0 to X; the chord extends from –X to + X. However, because the profile is symmetrical about 0, the integration as performed gets the correct result.

3. The calculation described in the preceding paragraph has been performed using an Excel spreadsheet[5]. The process is as follows:

- An exponent n is assumed. (Profiles for values of n ranging from 6 to 30 were calculated).
- The centerline velocity is computed relative to a mean velocity of 1.00.
- For chords located at each of the three y coordinates of interest, the mean axial velocity for the chord is calculated. In each case the procedure is:

[5] The spreadsheet is on file at Caldon.

- Starting at $x = 0$, $u(x, y_i)$ is calculated.
- x is incremented by an amount $\Delta x = X_i / 1000$)
- The value of $u(x, y_i)\,\Delta x$ is computed
- The cumulative sum of $u(x, y_i)\,\Delta x$ is computed.
- The process is continued until $x = X$.
- The mean velocity along the chord is obtained by dividing the cumulative sum of $u(x, y_i)\,\Delta x$ by X

- The ratio of the mean long path to mean short path velocity that would be measured by a 4 path chordal system, with a profile as defined by the assumed exponent n, is calculated.
- The theoretical profile factors (calibration coefficients) for a 4 path chordal system and a diametral (external) system, operating in the velocity profile characterized by the exponent n, are computed. The procedures for these calculations are described below.

4. A Profile Factor (PF) as used in Caldon instruments is defined as the quotient of the true flow to the flow as measured by the instrument prior to any correction. Hence,

$$PF = (u_{TRUE}\, A_{TRUE}) / (u_{MEAS}\, A_{MEAS})$$

Here u_{TRUE} is the true mean axial velocity over the pipe cross section,
A_{TRUE} is the exact area of the pipe cross section,
u_{MEAS} is the axial velocity measured by the instrument, and
A_{MEAS} is the cross sectional area embedded in the measurement of the instrument.

This analysis will assume no errors in the area measurements.

5. Accordingly, the Profile Factor, PF_1 for a diametral path (external) system is given by

$$PF_1 = (u_{TRUE}) / (u_{MEAS}) = 1 / u_{MEAS} = 1 / [\int u(x, 0.0)\, dx / R]$$

Where the integration is performed from 0 to R

6. For a 4 path chordal system, the measured mean short chord velocity, u_{SHORT}, is multiplied by a factor k_{SHORT} that reflects the weighting specified for this chord by the quadrature integration method and the chord length. Likewise the mean long chord velocity u_{LONG} is weighted by a factor k_{LONG} that reflects the weighting specified for this chord by the quadrature integration method and the chord length. Thus, the Profile Factor for a 4 path chordal system, PF_4, is given by

$$PF_4 = 1 / [2 \times k_{SHORT}\, u_{SHORT} + 2 \times k_{LONG}\, u_{LONG}]$$

Where $k_{SHORT} = 0.112$,
$k_{LONG} = 0.388$,
$u_{SHORT} = \int u(x, 0.86R)\, dx / X_{SHORT}$, and
$u_{LONG} = \int u(x, 0.34R)\, dx / X_{LONG}$

7. As previously noted, mean velocities for the short chords, the long chords, and the diameter were calculated for profiles whose inverse exponent n ranged from 6 to 30. Profile factors for the 4 chord and diametral systems were also calculated. For each selected exponent, the profile factors for both systems were then plotted against the ratio of the short path velocity to the long path velocity (SP/LP VR) for that exponent. The Profile Factor (calibration coefficient) for a 4 chord system is graphed against SP/LP VR in Figure 1. A linear fit (shown in the figure) has been used to characterize the relationship. The Profile Factor (calibration coefficient) for a diametral (external) system is graphed against SP/LP VR in Figure 2. Again, a linear fit (shown in the figure) has been used to characterize this relationship. For comparative purposes Figure 2 also shows the 4 chord system Profile Factor (the flatter curve near the top).

   The linear fits of the Profile Factor relations are as follows:

   - $PF_1 = 0.368\ (SP/LP\ VR) + 0.6331$
   - $PF_4 = -\ 0.0167\ (SP/LP\ VR) + 1.0167$

   These relations have been used to calculate the calibration changes that variations in the short and long path velocities measured in 18 Caldon chordal systems would produce in diametral and 4 chord systems. Results are tabulated in Table 1.

Figure 1

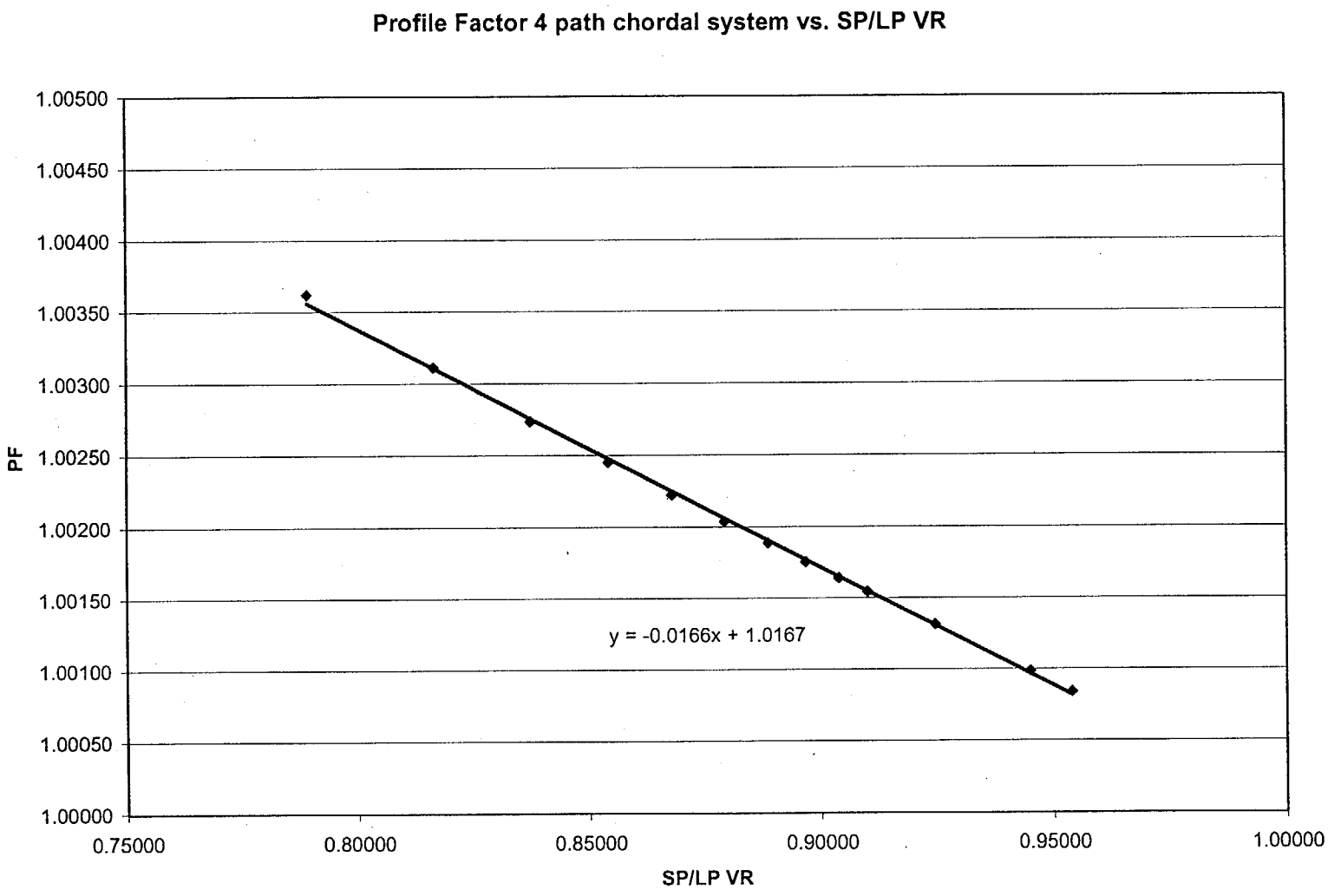
Profile Factor 4 path chordal system vs. SP/LP VR
1.00500
1.00450
1.00400
1.00350
1.00300
1.00250
1.00200
1.00150
1.00100
1.00050
1.00000
PF
y = -0.0166x + 1.0167
0.75000
0.80000
0.85000
0.90000
0.95000
1.00000
SP/LP VR

Figure 2

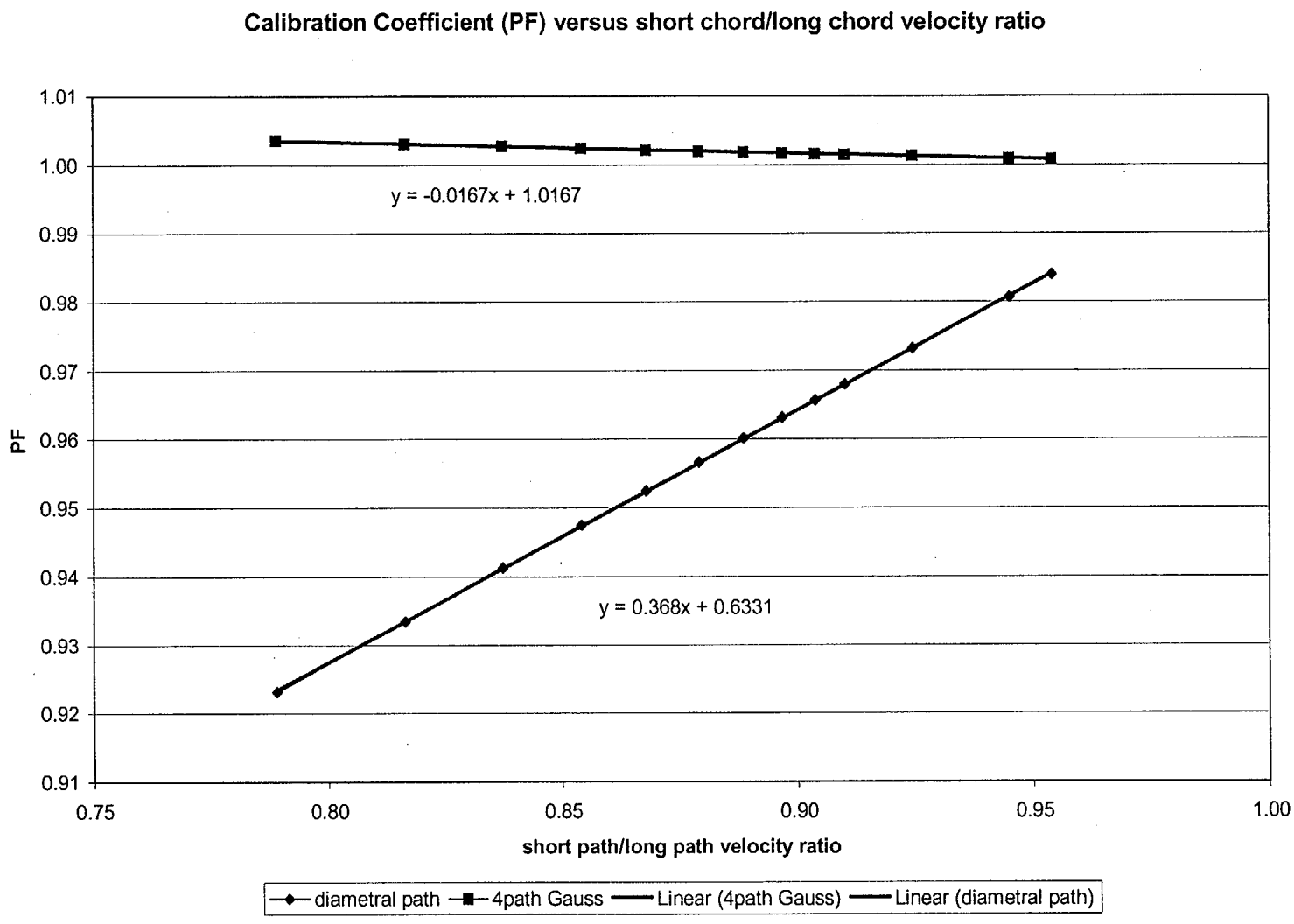
Calibration Coefficient (PF) versus short chord/long chord velocity ratio
1.01
1.00
0.99
0.98
0.97
0.96
0.95
0.94
0.93
0.92
0.91
PF
y = -0.0167x + 1.0167
y = 0.368x + 0.6331
0.75
0.80
0.85
0.90
0.95
1.00
short path/long path velocity ratio
diametral path
4path Gauss
Linear (4path Gauss)
Linear (diametral path)

Table 1
Calculated 4 Path and Single Path Profile Factors* versus Measured Chordal Velocity Ratios
Based on a random sample of logged data over periods of operation ranging from 2 months to several years

Plant/Unit		Hydraulic Geometry	Max SP/LP VR+	Min SP/LP VR+	4Path Chordal PF			Diametral Path PF		
					Max	Min	Δ	Max	Min	Δ
WBN 1		LEFM Check 45D downstream of single 90 ^{0} bend. 3 HP heater feeds upstream of bend include non planar reverse bend	0.892	0.854	1.0024	1.0018	0.0006	0.961	0.947 **	0.014 ***
SSES 2	Loop A	Three loops similar. LEFM Check ~13D downstream of single 90 ^{0} bend. Non planar 90 ^{0} bend 11 to 12 diameters upstream.	0.894	0.864	1.0023	1.0018	0.0005	0.962	0.951	0.011
	Loop B		0.837	0.827	1.0029	1.0027	0.0002	0.941	0.937	0.004
	Loop C		0.830	0.822	1.0030	1.0028	0.0001	0.939	0.936	0.003
IP 2	Loop 21	LEFM in each loop between 10 and 15D downstream of 90 ^{0} bend with nonplanar 90 ^{0} bend 10D upstream	0.894	0.884	1.0019	1.0018	0.0002	0.962	0.958	0.004
	Loop 22		0.931	0.883	1.0020	1.0012	0.0008	0.976	0.958	0.018
	Loop 23		0.916	0.874	1.0021	1.0014	0.0007	0.970	0.955	0.015
	Loop 24		0.939	0.917	1.0014	1.0010	0.0004	0.979	0.971	0.008
IP 3	Loop 31	LEFM in each loop 6D downstream of 90 ^{0} bend with nonplanar 90 ^{0} bend 10D upstream	0.940	0.921	1.0013	1.0010	0.0003	0.979	0.972	0.007
	Loop 32		0.925	0.916	1.0014	1.0012	0.0002	0.974	0.970	0.004
	Loop 33		0.952.	0.932	1.0011	1.0008	0.0003	0.983	0.976	0.007
	Loop 34		0.976	0.952	1.0008	1.0004	0.0004	0.992	0.983	0.009
CP 1		~LEFM in each unit 11 D downstream of 90 ^{0} bend Non planar feed ~ 18 diameters upstream.	0.918	0.914	1.0014	1.0014	0.0000	0.971	0.969	0.002
CP2			0.909	0.908	1.0015	1.0015	0.0000	0.967	0.967	0.000

Continued, next page

Table 1, continued

Plant/Unit		Hydraulic Geometry	Max SP/LP VR	Min SP/LP VR	4Path Chordal PF			Diametral Path PF		
					Max	Min	Δ	Max	Min	Δ
PI 2	Loop 31 Loop 32	LEFM in each loop~20D downstream of 90 ^{0} bend. Each loop is fed from the branches of a non planar symmetrical lateral ~ 4 diameters upstream of bends.	0.867 0.881	0.851 0.868	1.0023 1.0022	1.0020 1.0020	0.0003 0.0002	0.957 0.957	0.951 0.953	0.006 0.004
BV 1 BV 2		U1 LEFM ~6 D downstream of header, 2 non planar feeds upstream (U1) U2 LEFM ~10 D downstream of header, 2 non planar feeds upstream (U1)	0.922 0.920	0.913 0.915	1.0015 1.0014	1.0013 1.0013	0.0002 0.0001	0.972 0.972	0.969 0.970	0.003 0.002
Mean High – Low PF (Δ), ± 1 σ (standard deviation)							**0.0003 ±0.0002**			**0.007 ±0.005**

Average Diametral Path PF: 0.964

Notes

* A Profile Factor is the calibration coefficient for an ultrasonic meter. It is sometimes referred to as a "velocity profile correction factor" and is equivalent to the discharge coefficient of a flow nozzle.
+ SP/LP VR is the ratio of the average velocity projected onto the short chords (or paths) to the average velocity projected onto the long chords.
** A Profile Factor of 0.953, based on model tests, was employed on an external (Diametral Path) ultrasonic meter installed 20D upstream of the LEFM Check (i.e., 25D downstream of the bend).
*** The indication of the external meter installed at 25 diameters downstream of the bend shifted about 1.6% relative to the indication of the 4 path chordal instrument during an operational sequence when the chordal velocity ratio changed from its minimum to its maximum value. Allowing for a change in the calibration of the 4 path meter of 0.06%, the net calibration change measured for the external meter at 25D was about 1.5%, a figure entirely consistent with the 1.4% calculated from the change in the measured chordal velocities.

D. Summary Table: *Evaluation of Hydraulic Configurations and Uncertainties for Operating External LEFMs*

ER-262 APPENDIX D:

SUMMARY TABLE:
EVALUATION OF HYDRAULIC CONFIGURATIONS AND UNCERTAINTIES FOR OPERATING EXTERNAL LEFMS

Summary Table: Evaluation of Hydraulic Configurations and Uncertainties for Operating External LEFMs

Results of Caldon's analysis indicate that current external meter applications in the industry fall into one of four categories:

A. **No measurable effect.** The LEFM 8300 external meter is installed downstream of and in close proximity to a flow straightener designed to dominate the local velocity profile. This effectively isolates the LEFM from effects of changing upstream velocity profiles.

B. **Possible effect modeled and bounded.** Potential velocity profile changes at the installation location were modeled and are bounded by calibration testing.

C. **Possible effect bounded.** The calibration testing did not specifically address the profile changes that have since been observed. However, their effect on meter accuracy is bounded by the existing uncertainty allowance.

D. **Uncertainty bounds affected.** The calibration testing did not specifically address the profile changes since observed. Furthermore, their effect on meter accuracy is not bounded by the existing uncertainty allowance.

No action is necessary for any of these categories except category D.

All LEFM 8300 installations were evaluated. As shown by the following table, only one of the 55 feedwater pipes with LEFM 8300 external meters falls in category D.

Plant	Category	Report
Cofrentes	A	ER-236
Fitz Patrick	A	ER-238
Kashiwazaki Unit 1	A	ER-239
Kashiwazaki Unit 5	A	ER-241
Perry	A	ER-242
River Bend	A	ER-244
Doel Units 3 and 4	B	ER-228
Grand Gulf	B	ER-229
Millstone Unit 3	B	ER-230
Nine Mile Point 1	B	ER-231
Nine Mile Point 2	B	ER-232
Palo Verde Units 1, 2, and 3	B	ER-233
Trillo Unit 1	B	ER-234
Vandellos Unit 2	B	ER-235
Doel Units 1 and 2	B	ER-237
Kashiwazaki Unit 4	B	ER-240
VC Summer	B	ER-247
St. Lucie Unit 2	Loop A = B Loop B = C	ER-246
Quad Cities Units 1 and 2	C	ER-243
Sequoyah Units 1 and 2	C	ER-245
Watts Bar	D	ER-250

E. Scoping Calculation: *Errors in Flow Nozzles with Swirl Velocity of 10% Axial Velocity*

ER-262 APPENDIX E:

SCOPING CALCULATION:
ERRORS IN FLOW NOZZLES WITH SWIRL VELOCITY OF 10% AXIAL VELOCITY

Scoping Calculation:
Errors in Flow Nozzles with Swirl Velocity of 10% Axial Velocity

Purpose:

The purpose of this calculation is to provide an approximate estimate of the error in the flow measurement of a nozzle, produced by swirl having a tangential velocity of 10% of the axial velocity. Errors will be calculated for nozzles having beta (diameter) ratios of 0.5 and 0.7.

Assumptions:

1. The hydraulic losses between the upstream (pipe) tap of the nozzle based flow measurement and the throat tap are negligible. That is, the total pressure at these two stations is the same.
2. The flow is incompressible. That is, the product of the mean axial velocity and the cross sectional area at the upstream tap location equals the product of the mean axial velocity and the cross sectional area at the throat tap location.
3. The swirl can be characterized as a rotating disk of fluid, having a tangential velocity at the pipe wall equal to the product of the radius and the angular velocity.
4. Rotational momentum is conserved between the upstream pipe tap and the throat tap. That is, the products of the rotational moment of inertia and the angular velocity of the fluid at each of these stations are equal.

Summary:

With a tangential velocity due to swirl of 10% of the axial velocity, a flow nozzle with a beta ratio of 0.5 will read in error by 2%. The actual flow will be less than the indicated flow.

This same tangential velocity will produce an error of 0.65% in a flow nozzle having a beta ratio of 0.7. Again the actual flow will be less than the indicated flow.

Calculation:

1. The nozzle configuration and nomenclature are shown in the sketch below

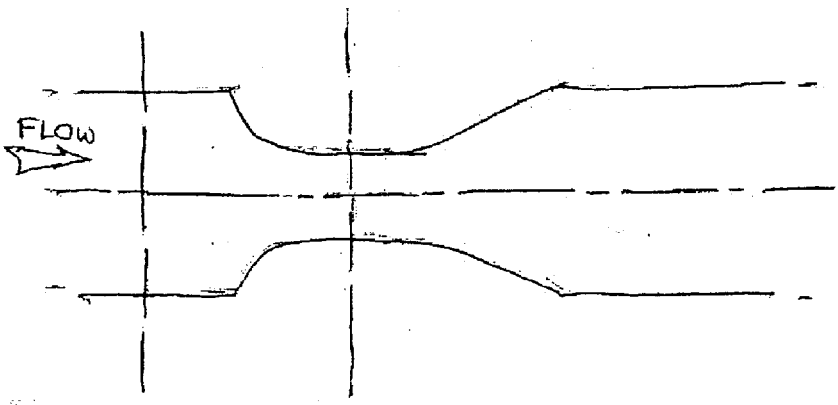

Station	1	2
Total pressure	p_{T1}	p_{T2}
Static pressure	p_{S1}	p_{S2}
Axial Velocity	V_1	V_2
Area	A_1	A_2
Internal Radius	R_1	R_2
Moment of Inertia	I_1	I_2
Angular Velocity	ω_1	ω_2

2. The fluid energy per unit volume at each station is given by the total pressure. In accordance with Assumption 1:

   p_{T1} = (potential energy/ unit volume + kinetic energy/ unit volume)$_1$ =
   p_{T2} = (potential energy/ unit volume + kinetic energy/ unit volume)$_2$

3. The static pressure defines the potential energy/ unit volume at each station. Rearranging terms in the above equations and noting the difference in total pressure is zero, the difference in static pressures is given by

   $p_{S1} - p_{S2}$ = (kinetic energy/ unit volume)$_2$ – (kinetic energy/ unit volume)$_1$

4. In the base case no swirl is present. In this case, the difference in kinetic energy per unit volume is given by:

   $$p_{S1} - p_{S2} = \tfrac{1}{2} \rho V_2^2 / g - \tfrac{1}{2} \rho V_1^2 / g$$

   where g is the gravitational constant.

5. The velocity at station 2 is determined in terms of the velocity at station 1 using Assumption 2.

   $$V_1 A_1 = V_2 A_2$$

   $$V_2 = V_1 A_1 / A_2 = V_1 R_1^2 / R_2^2 = V_1 / \beta^2$$

The term β is defined as the ratio of the throat diameter to the pipe diameter. Hence β equals the ratio of the throat radius to the pipe radius.

6. Substituting for V_2 in the equation of paragraph 4, the differential pressure for the nozzle is given by

$$p_{S1} - p_{S2} = \Delta p = \tfrac{1}{2} (\rho / g) (V_1 / \beta^2)^2 - \tfrac{1}{2} (\rho / g) V_1^2 = \tfrac{1}{2} (\rho / g) V_1^2 [(1/ \beta^4) - 1]$$

7. For the case where swirl is present, rotational kinetic energy per unit volume must be added to the kinetic energy per unit volume term. Using Assumption 3, the rotational kinetic energy per unit volume, KER/V at any station is given by

$$KER/V = \tfrac{1}{2} (I \omega^2)/ A\Delta L$$

Where ΔL is a unit of axial length

The rotational moment of inertia of a rotating disc of thickness ΔL is given by[1]

$$I = (\rho / g) (\pi R^4/ 4) \Delta L$$

The term $A\Delta L$ is given by

$$A\Delta L = \pi R^2 \Delta L$$

Hence

$$KER/V = \tfrac{1}{2} (\rho / g) (R^2 \omega^2 / 4)$$

8. Assumption 4 implies that

$$(I \omega)_1 = (I \omega)_2$$

Using the equation for moment of inertia from paragraph 7 in this equation, and canceling common terms

$$R_1^4 \omega_1 = R_2^4 \omega_2$$

Thus

$$\omega_2 = \omega_1 (R_1 / R_2)^4 = \omega_1 (1/ \beta^4)$$

9. At each station, the rotational kinetic energy per unit volume adds to the kinetic energy due to the axial velocity. It therefore increases the difference in static pressures by an amount equal to the difference between the rotational kinetic energy per unit volume terms at stations 1 and 2. The net error in the pressure differential $\delta\Delta p$ is

$$\delta\Delta p = (KER/V)_2 - (KER/V)_1 = \tfrac{1}{2} (\rho / g) (R_1^2 \omega_1^2 / 4)[(1/ \beta^8) - 1]$$

[1] Eshbach, Handbook of Engineering Fundamentals First Edition Chapter 4

In the absence of swirl, the differential pressure for the nozzle was derived in paragraph 6:

$$\Delta p = \tfrac{1}{2} (\rho / g) V_1^2 [(1/ \beta^4) - 1]$$

Hence the per unit error in differential pressure, $E_{\Delta p}$ is the quotient of these expressions.

$$E_{\Delta p} = \{(R_1^2 \omega_1^2 / 4) [(1/ \beta^8) - 1]\} / \{V_1^2 [(1/ \beta^4) - 1]\}$$

Noting that $R_1 \omega_1$ is the tangential velocity at station 1, V_{T1}, the per unit pressure error is

$$E_{\Delta p} = \tfrac{1}{4} (V_{T1} / V_1)^2 [(1/ \beta^8) - 1]\} / [(1/ \beta^4) - 1]$$

10. Since volumetric flow is proportional to velocity, and differential pressure is proportional to the square of velocity, the per unit error in flow, $\delta Q/Q$ is one-half the per unit error in pressure. Accordingly, for a tangential velocity of 10% of the mean axial velocity

$$\delta Q/Q = \tfrac{1}{2} E_{\Delta p} = 1/8 (0.1)^2 [(1/ \beta^8) - 1]\} / [(1/ \beta^4) - 1]$$

For $\beta = 0.5$,

$\delta Q/Q = 2.0\%$

For $\beta = 0.7$,

$\delta Q/Q = 0.65\%$

Note that in both cases the swirl causes the nozzle's flow indication to be high, since the rotational kinetic energy increases the differential pressure for a given axial velocity.

F. Plant Data, 4 and 8 Path Chordal Installations

TABLE OF CONTENTS

1. Plant Data Watts Bar Unit 1
2. Plant Data Susquehanna Unit 2 Loops A, B, and C
3. Plant Data Indian Point Unit 2 Loops 21, 22, 23, and 24
4. Plant Data Indian Point Unit 3 Loops 31, 32, 33, and 34
5. Plant Data Comanche Peak Unit 1 and Comanche Peak Unit 2
6. Plant Data Prairie Island Unit 2 Loop A and B
7. Plant Data Beaver Valley Unit 1 and Beaver Valley Unit 2

1

Plant Name: Watts Bar Unit 1

Feedwater Measurement System: LEFM✓

Installation Geometry: 45 L/D Downstream of Single 90° Elbow

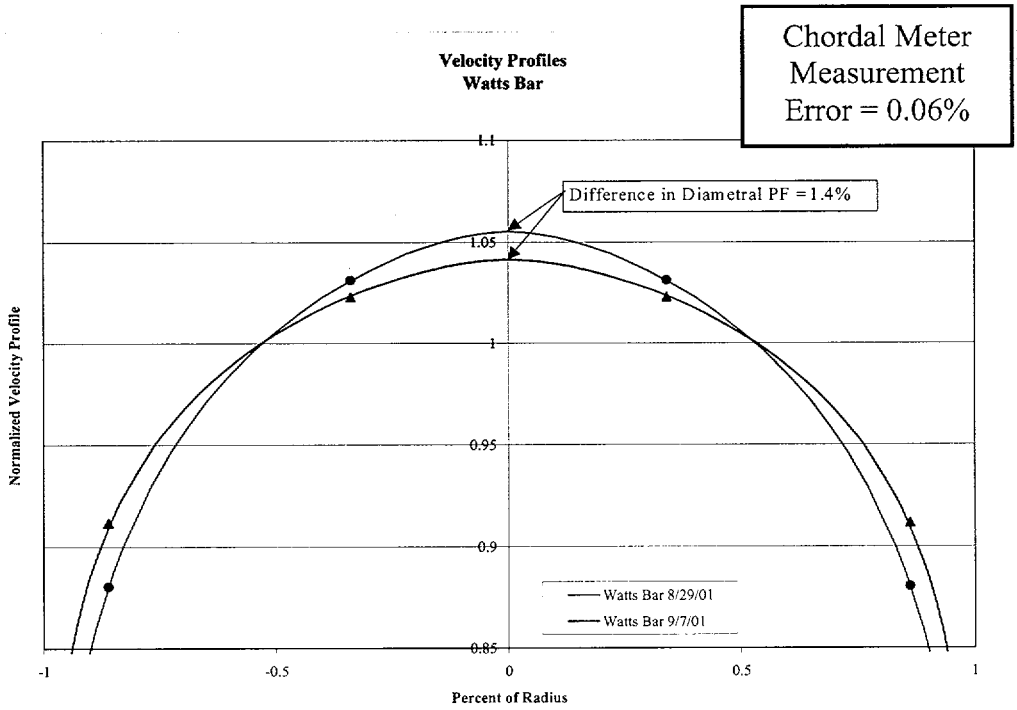

2

CALDON

SKETCH SKRSH-03.DWG

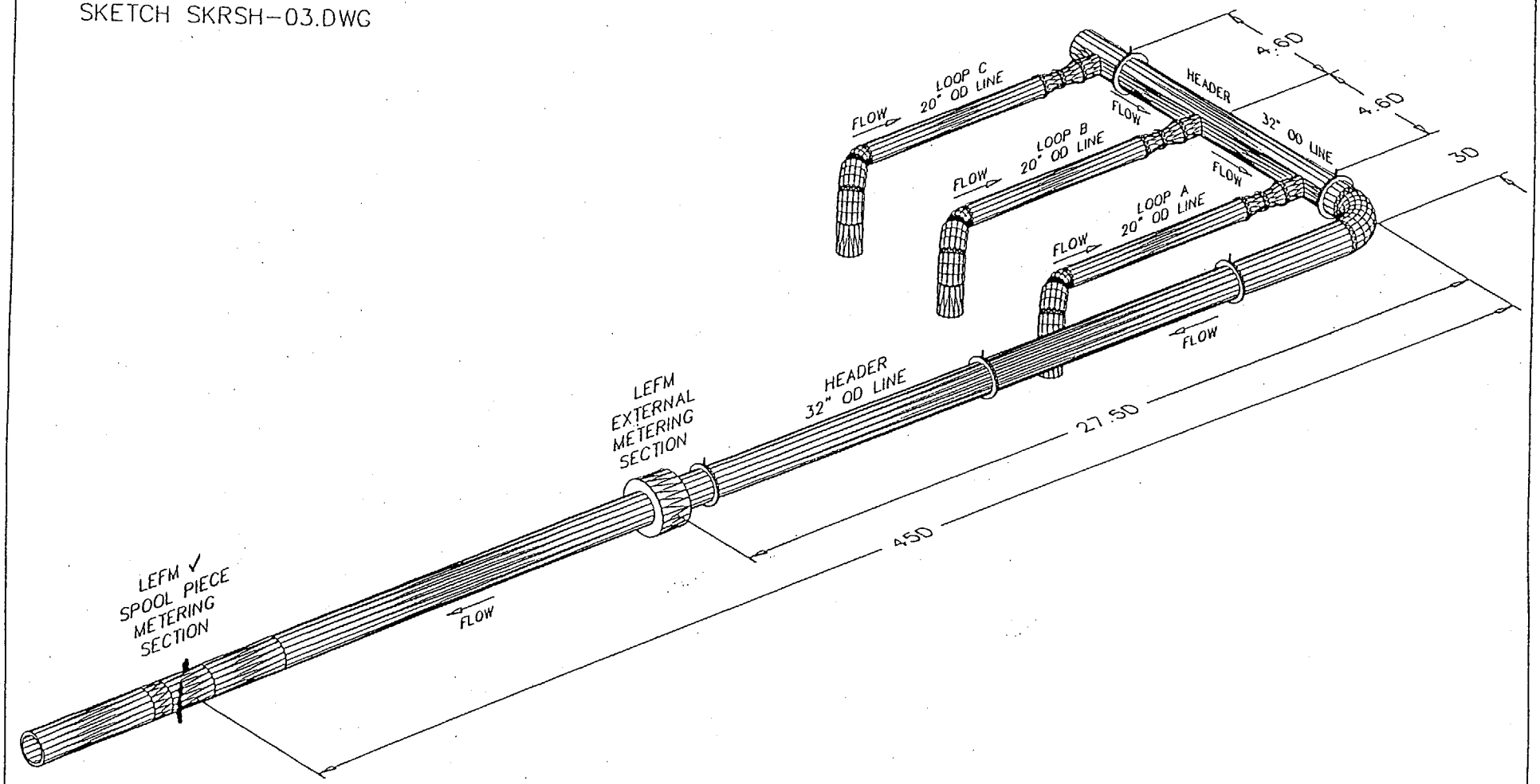

TYPICAL PIPING CONFIGURATION
AND LEFM LOCATION
WATTS BAR

Unit 1 02:46:21 2001/08/29

Configuration Files

ALARM.INI	2000/12/12	18:15:40	FFFED282
FAT.INI	2000/12/12	18:15:40	FFFFEB2F
HYDRAULI.INI	2000/12/12	18:15:40	FFFF4541
METER.INI	2000/12/12	18:15:40	FFFD66BF
PARAMETR.INI	2000/12/12	18:15:40	FFFB8AE0
P_CONFIG.INI	2000/12/12	18:15:40	FFFF82DC
PROPERTY.INI	2000/12/12	18:15:40	FFFF6C54
SETUP.INI	2000/12/12	18:15:40	FFFF9D29

Setup Files

Setapu1.txt	2000/12/12	18:15:40	FFF89717
Setapu2.txt	2000/12/12	18:15:40	FFF899D5
Setapu3.txt	2000/12/12	18:15:40	FFF899D5
Setapu4.txt	2000/12/12	18:15:40	FFF899D5
Setapu5.txt	2000/12/12	18:15:40	FFF899D5
Setapu6.txt	2000/12/12	18:15:40	FFF899D5
Setapu7.txt	2000/12/12	18:15:40	FFF899D5
Setapu8.txt	2000/12/12	18:15:40	FFF899D5

Unit 1 Current Flow:	82.50
Unit 1 Average Flow:	82.39
Unit 1 Maximum Flow:	82.88
Unit 1 Minimum Flow:	81.91
Unit 1 Deviation Flow:	0.18
Unit 1 Current Temp:	443.7
Unit 1 Average Temp:	443.7
Unit 1 Maximum Temp:	443.9
Unit 1 Minimum Temp:	443.6
Unit 1 Deviation Temp:	0.0
Unit 1 Current System Status:	ALERT
Unit 1 Minimum System Status:	ALERT
Unit 1 Current Mass Flow:	15463.292
Unit 1 Average Mass Flow:	15442.563
Unit 1 Maximum Mass Flow:	15532.904
Unit 1 Minimum Mass Flow:	15350.739
Unit 1 Deviation Mass Flow:	34.223
Unit 1 Uncertainty:	0.11
Meter 1 Current Flow:	82.50
Meter 1 Average Flow:	82.39
Meter 1 Maximum Flow:	82.88
Meter 1 Minimum Flow:	81.91
Meter 1 Deviation Flow:	0.18
Meter 1 Current Temp:	443.7
Meter 1 Average Temp:	443.7
Meter 1 Maximum Temp:	443.9
Meter 1 Minimum Temp:	443.6
Meter 1 Deviation Temp:	0.0

Meter 1 Current Press:	1159.77
Meter 1 Average Press:	1158.10
Meter 1 Maximum Press:	1160.50
Meter 1 Minimum Press:	1155.75
Meter 1 Deviation Press:	0.04
Meter 1 Current Meter Status:	ALERT
Meter 1 Minimum Meter Status:	ALERT
Meter 1 Current Mass Flow:	15463.292
Meter 1 Average Mass Flow:	15442.563
Meter 1 Maximum Mass Flow:	15532.904
Meter 1 Minimum Mass Flow:	15350.739
Meter 1 Deviation Mass Flow:	34.223
Meter 1 Uncertainty:	0.11

	Path 1	Path 2	Path 3	Path 4
Meter 1 Current Variance:	10167.92	19972.27	14771.31	8568.18
Meter 1 Average Vnorm:	0.8648	1.0277	1.0402	0.8996
Meter 1 Current Vnorm:	0.8679	1.0281	1.0408	0.8933
Meter 1 Maximum Vnorm:	0.8831	1.0395	1.0528	0.9166
Meter 1 Minimum Vnorm:	0.8484	1.0151	1.0288	0.8772
Meter 1 Deviation Vnorm:	0.006	0.004	0.004	0.006
Meter 1 Benchmark Vnorm:	0.8648	1.0277	1.0402	0.8995
Meter 1 Limit % Vnorm:	0.50	0.50	0.50	0.50
Meter 1 Average Gain:	66.01	70.39	76.07	66.04
Meter 1 Current Gain:	66.01	70.41	76.13	65.97
Meter 1 Maximum Gain:	66.33	70.68	76.37	66.25
Meter 1 Minimum Gain:	65.66	70.17	75.78	65.82
Meter 1 Deviation Gain:	0.09	0.08	0.09	0.07
Meter 1 Limit Gain:	76.00	76.00	76.00	76.00
Meter 1 Current Gain Up:	65.54	70.09	76.21	65.39
Meter 1 Current Gain Down:	66.33	70.56	75.90	66.48
Meter 1 Current TPGain Up:	70.72	70.72	70.56	70.56
Meter 1 Current TPGain Down:	70.56	70.56	70.56	70.56
Meter 1 Average S/N Ratio:	38.50	26.71	15.31	38.33
Meter 1 Current S/N Ratio:	39.73	27.35	15.27	39.49
Meter 1 Maximum S/N Ratio:	40.66	29.16	17.02	40.97
Meter 1 Minimum S/N Ratio:	35.50	23.83	13.54	35.28
Meter 1 Deviation S/N Ratio:	1.47	1.28	0.70	1.60
Meter 1 Average TDown:	478419	823170	823193	478446
Meter 1 Current TDown:	478373	823095	823121	478413
Meter 1 Maximum TDown:	478533	823378	823398	478567
Meter 1 Minimum TDown:	478325	823008	823010	478339
Meter 1 Deviation TDown:	35	60	61	36
Meter 1 Current TPTDown:	4000747	4000748	4000746	4000747
Meter 1 Average DeltaT:	2158.4	4812.0	4861.4	2209.0
Meter 1 Current DeltaT:	2168.5	4819.0	4869.7	2196.0
Meter 1 Maximum DeltaT:	2207.3	4876.3	4919.1	2254.9
Meter 1 Minimum DeltaT:	2107.8	4746.0	4794.5	2160.4
Meter 1 Deviation DeltaT:	15.7	22.8	23.5	15.4

Meter 1 Current TPDeltaT:	-2.3	-0.6	-0.6	-1.4
Meter 1 Current Path Status:	NORMAL	NORMAL	ALERT	NORMAL
Meter 1 Minimum Path Status:	NORMAL	NORMAL	ALERT	NORMAL
Meter 1 Average Reject %:	0.1	0.1	2.0	0.0
Meter 1 Current Reject %:	0.0	0.0	3.5	0.0
Meter 1 Maximum Reject %:	2.8	1.2	6.5	1.5
Meter 1 Minimum Reject %:	0.0	0.0	0.0	0.0
Meter 1 Deviation Reject %:	0.3	0.2	1.0	0.2
Meter 1 Incoming Samples:	719	719	719	719
Meter 1 Number Failed Rejects:	0	0	0	0

Alarm Log Events

2001/08/29 01:46:18 Meter 1 ALERT
2001/08/29 01:46:18 Unit 1 ALERT
2001/08/29 01:46:19 Meter 1 Path 3 Alert -- Gain
2001/08/29 01:46:19 Meter 1 Path 3 ALERT
2001/08/29 01:46:33 Meter 1 NORMAL
2001/08/29 01:46:33 Unit 1 NORMAL
2001/08/29 01:46:34 Meter 1 Path 3 Pass -- Gain
2001/08/29 01:46:34 Meter 1 Path 3 NORMAL
2001/08/29 01:47:08 Meter 1 ALERT
2001/08/29 01:47:08 Unit 1 ALERT
2001/08/29 01:47:09 Meter 1 Path 3 Alert -- Gain
2001/08/29 01:47:09 Meter 1 Path 3 ALERT
2001/08/29 01:47:28 Meter 1 NORMAL
2001/08/29 01:47:28 Unit 1 NORMAL
2001/08/29 01:47:29 Meter 1 Path 3 Pass -- Gain
2001/08/29 01:47:29 Meter 1 Path 3 NORMAL
2001/08/29 01:47:48 Meter 1 ALERT
2001/08/29 01:47:48 Unit 1 ALERT
2001/08/29 01:47:49 Meter 1 Path 3 Alert -- Gain
2001/08/29 01:47:49 Meter 1 Path 3 ALERT
2001/08/29 01:47:53 Meter 1 NORMAL
2001/08/29 01:47:53 Unit 1 NORMAL
2001/08/29 01:47:54 Meter 1 Path 3 Pass -- Gain
2001/08/29 01:47:54 Meter 1 Path 3 NORMAL
2001/08/29 01:48:03 Meter 1 ALERT
2001/08/29 01:48:03 Unit 1 ALERT
2001/08/29 01:48:04 Meter 1 Path 3 Alert -- Gain
2001/08/29 01:48:04 Meter 1 Path 3 ALERT
2001/08/29 01:48:08 Meter 1 NORMAL
2001/08/29 01:48:08 Unit 1 NORMAL
2001/08/29 01:48:09 Meter 1 Path 3 Pass -- Gain
2001/08/29 01:48:09 Meter 1 Path 3 NORMAL
2001/08/29 01:48:13 Meter 1 ALERT
2001/08/29 01:48:13 Unit 1 ALERT
2001/08/29 01:48:14 Meter 1 Path 3 Alert -- Gain
2001/08/29 01:48:14 Meter 1 Path 3 ALERT
2001/08/29 01:48:23 Meter 1 NORMAL
2001/08/29 01:48:23 Unit 1 NORMAL
2001/08/29 01:48:24 Meter 1 Path 3 Pass -- Gain
2001/08/29 01:48:24 Meter 1 Path 3 NORMAL
2001/08/29 01:48:28 Meter 1 ALERT
2001/08/29 01:48:28 Unit 1 ALERT

Unit 1 19:01:03 2001/09/07

Configuration Files

ALARM.INI	2000/12/12	18:15:40	FFFED282
FAT.INI	2000/12/12	18:15:40	FFFFEB2F
HYDRAULI.INI	2001/09/07	17:41:40	FFFF453B
METER.INI	2000/12/12	18:15:40	FFFD66BF
PARAMETR.INI	2000/12/12	18:15:40	FFFB8AE0
P_CONFIG.INI	2000/12/12	18:15:40	FFFF82DC
PROPERTY.INI	2000/12/12	18:15:40	FFFF6C54
SETUP.INI	2000/12/12	18:15:40	FFFF9D29

Setup Files

Setapu1.txt	2000/12/12	18:15:40	FFF89717
Setapu2.txt	2000/12/12	18:15:40	FFF899D5
Setapu3.txt	2000/12/12	18:15:40	FFF899D5
Setapu4.txt	2000/12/12	18:15:40	FFF899D5
Setapu5.txt	2000/12/12	18:15:40	FFF899D5
Setapu6.txt	2000/12/12	18:15:40	FFF899D5
Setapu7.txt	2000/12/12	18:15:40	FFF899D5
Setapu8.txt	2000/12/12	18:15:40	FFF899D5

Unit 1 Current Flow:	81.49
Unit 1 Average Flow:	81.59
Unit 1 Maximum Flow:	82.37
Unit 1 Minimum Flow:	80.99
Unit 1 Deviation Flow:	0.22
Unit 1 Current Temp:	442.5
Unit 1 Average Temp:	442.7
Unit 1 Maximum Temp:	442.9
Unit 1 Minimum Temp:	435.7
Unit 1 Deviation Temp:	0.3
Unit 1 Current System Status:	NORMAL
Unit 1 Minimum System Status:	FAIL
Unit 1 Current Mass Flow:	15290.738
Unit 1 Average Mass Flow:	15307.514
Unit 1 Maximum Mass Flow:	15454.595
Unit 1 Minimum Mass Flow:	15194.176
Unit 1 Deviation Mass Flow:	41.940
Unit 1 Uncertainty:	0.12
Meter 1 Current Flow:	81.49
Meter 1 Average Flow:	81.59
Meter 1 Maximum Flow:	82.37
Meter 1 Minimum Flow:	80.99
Meter 1 Deviation Flow:	0.22
Meter 1 Current Temp:	442.5
Meter 1 Average Temp:	442.7
Meter 1 Maximum Temp:	442.9
Meter 1 Minimum Temp:	435.7
Meter 1 Deviation Temp:	0.3

Meter 1 Current Press:	1161.97
Meter 1 Average Press:	1155.12
Meter 1 Maximum Press:	1170.75
Meter 1 Minimum Press:	200.00
Meter 1 Deviation Press:	0.33
Meter 1 Current Meter Status:	NORMAL
Meter 1 Minimum Meter Status:	FAIL
Meter 1 Current Mass Flow:	15290.738
Meter 1 Average Mass Flow:	15307.514
Meter 1 Maximum Mass Flow:	15454.595
Meter 1 Minimum Mass Flow:	15194.176
Meter 1 Deviation Mass Flow:	41.940
Meter 1 Uncertainty:	0.12

	Path 1	Path 2	Path 3	Path 4
Meter 1 Current Variance:	11232.52	15020.36	27588.72	16844.19
Meter 1 Average Vnorm:	0.8186	0.9972	1.0523	1.0098
Meter 1 Current Vnorm:	0.8302	1.0023	1.0448	1.0064
Meter 1 Maximum Vnorm:	0.8439	1.0134	1.0768	1.0456
Meter 1 Minimum Vnorm:	0.7865	0.9806	1.0323	0.9736
Meter 1 Deviation Vnorm:	0.009	0.005	0.008	0.012
Meter 1 Benchmark Vnorm:	0.8187	0.9971	1.0519	1.0109
Meter 1 Limit % Vnorm:	0.50	0.50	0.50	0.50
Meter 1 Average Gain:	54.60	60.57	68.16	56.02
Meter 1 Current Gain:	54.68	60.60	68.17	55.97
Meter 1 Maximum Gain:	54.80	60.88	68.44	56.21
Meter 1 Minimum Gain:	54.33	60.25	67.74	55.82
Meter 1 Deviation Gain:	0.08	0.11	0.11	0.08
Meter 1 Limit Gain:	76.00	76.00	76.00	76.00
Meter 1 Current Gain Up:	54.09	60.37	67.90	55.35
Meter 1 Current Gain Down:	55.03	60.68	68.37	56.44
Meter 1 Current TPGain Up:	58.95	58.95	58.80	58.64
Meter 1 Current TPGain Down:	58.64	58.64	58.80	58.80
Meter 1 Average S/N Ratio:	36.63	21.75	11.16	31.41
Meter 1 Current S/N Ratio:	37.58	22.46	11.24	33.03
Meter 1 Maximum S/N Ratio:	38.83	24.15	12.71	33.55
Meter 1 Minimum S/N Ratio:	32.71	18.72	9.49	28.04
Meter 1 Deviation S/N Ratio:	0.72	0.57	0.56	0.61
Meter 1 Average TDown:	477614	821752	821689	477469
Meter 1 Current TDown:	477447	821476	821445	477324
Meter 1 Maximum TDown:	477801	822098	822059	477663
Meter 1 Minimum TDown:	477432	821443	821364	477289
Meter 1 Deviation TDown:	71	122	124	71
Meter 1 Current TPTDown:	4000754	4000755	4000754	4000756
Meter 1 Average DeltaT:	2015.9	4606.8	4852.1	2446.8
Meter 1 Current DeltaT:	2040.5	4621.4	4808.8	2433.8
Meter 1 Maximum DeltaT:	2082.0	4677.9	4974.6	2541.1
Meter 1 Minimum DeltaT:	1940.4	4532.2	4740.5	2353.5
Meter 1 Deviation DeltaT:	21.3	24.8	40.5	30.8

Meter 1 Current TPDeltaT:	0.6	-1.2	-0.4	-2.0
Meter 1 Current Path Status:	NORMAL	NORMAL	NORMAL	NORMAL
Meter 1 Minimum Path Status:	FAIL	FAIL	FAIL	FAIL
Meter 1 Average Reject %:	0.4	0.5	8.0	0.8
Meter 1 Current Reject %:	1.0	0.8	8.5	0.0
Meter 1 Maximum Reject %:	25.0	25.5	31.5	26.0
Meter 1 Minimum Reject %:	0.0	0.0	0.0	0.0
Meter 1 Deviation Reject %:	1.9	1.8	2.5	1.9
Meter 1 Incoming Samples:	599	599	599	599
Meter 1 Number Failed Rejects:	0	0	0	0

Alarm Log Events

2001/09/07 18:11:11	Meter 1 Fail -- Path Failure
2001/09/07 18:11:11	Unit 1 FAIL
2001/09/07 18:11:27	Meter 1 Path 1 Fail (APU) -- Not Responding
2001/09/07 18:11:27	Meter 1 Path 1 Pass -- Transit Time
2001/09/07 18:11:27	Meter 1 Path 2 Fail (APU) -- Not Responding
2001/09/07 18:11:27	Meter 1 Path 2 Pass -- Transit Time
2001/09/07 18:11:27	Meter 1 Path 3 Fail (APU) -- Not Responding
2001/09/07 18:11:27	Meter 1 Path 3 Pass -- Transit Time
2001/09/07 18:11:27	Meter 1 Path 4 Fail (APU) -- Not Responding
2001/09/07 18:11:27	Meter 1 Path 4 Pass -- Transit Time
2001/09/07 18:11:32	Meter 1 NORMAL
2001/09/07 18:11:32	Unit 1 NORMAL
2001/09/07 18:11:32	Meter 1 Path 1 Pass (APU) -- Responding
2001/09/07 18:11:32	Meter 1 Path 1 NORMAL
2001/09/07 18:11:32	Meter 1 Path 2 Pass (APU) -- Responding
2001/09/07 18:11:32	Meter 1 Path 2 NORMAL
2001/09/07 18:11:32	Meter 1 Path 3 Pass (APU) -- Responding
2001/09/07 18:11:32	Meter 1 Path 3 NORMAL
2001/09/07 18:11:32	Meter 1 Path 4 Pass (APU) -- Responding
2001/09/07 18:11:32	Meter 1 Path 4 NORMAL
2001/09/07 18:21:16	Verification Test Performed

Watts Bar

Data taken from commissioning and from plant personnel during the velocity profile alarm

Unit 1

	8/29/01	9/7/01
-0.861136	0.8648	0.8186
-0.339981	1.0277	0.9972
0.33998	1.0402	1.0523
0.86114	0.8996	1.0098
S/L	0.853	0.892

Plant Name: Susquehanna Unit 2 Loop A

Feedwater Measurement System: LEFM✓

Installation Geometry: 10 Diameters Downstream from a 90° Bend

Non-planar bend 21 Diameters Upstream

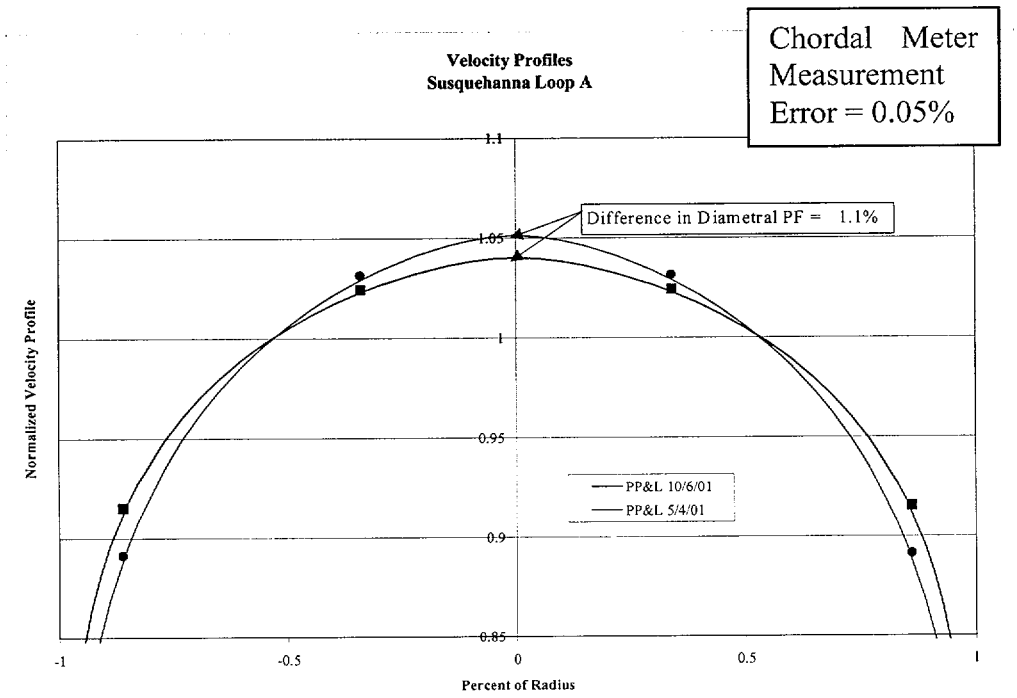

CALDON

SKETCH SKRSH-.35A.DWG

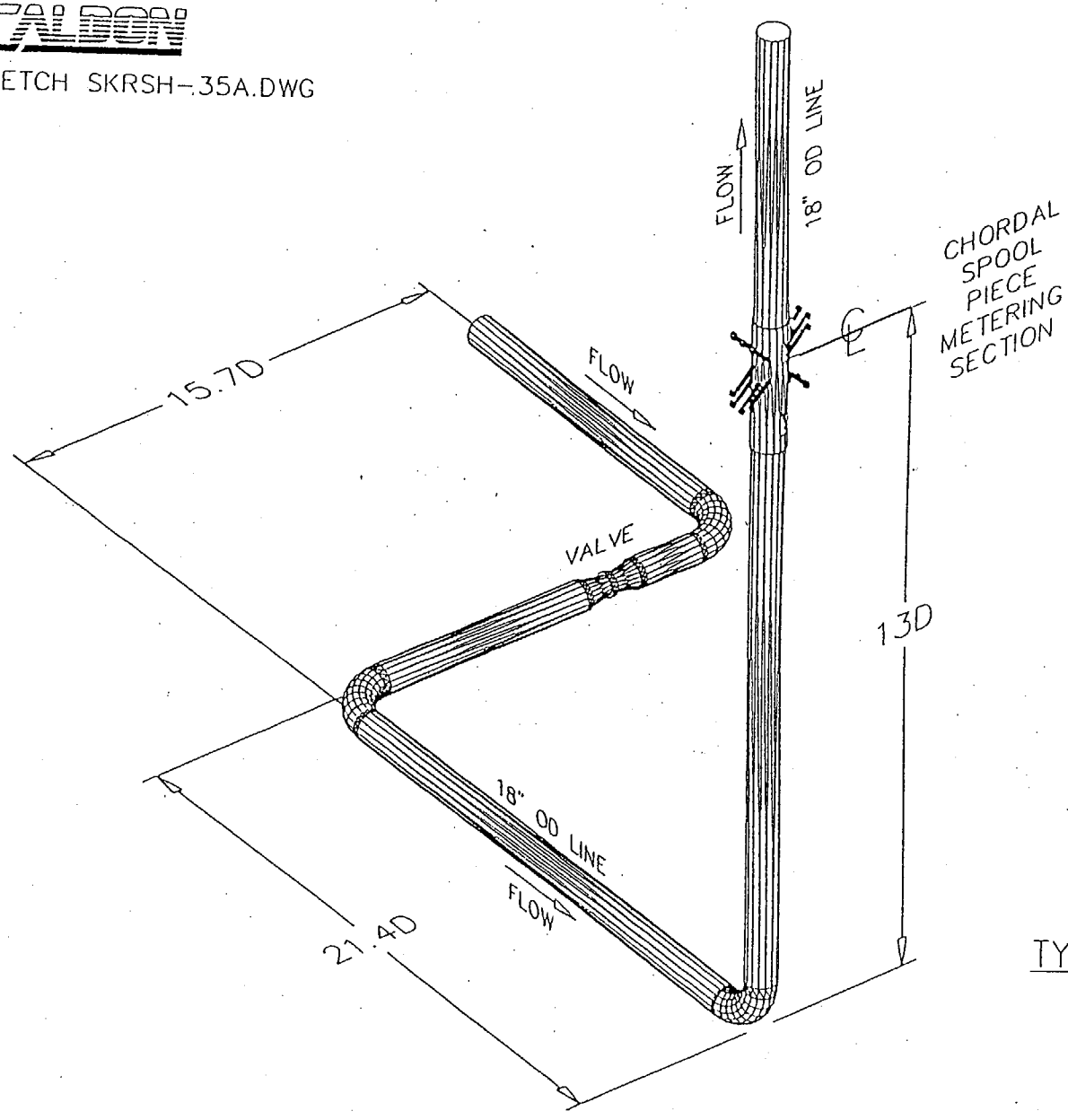

TYPICAL PIPING CONFIGURATION
AND LEFM LOCATION
PP&L SUSQUEHANNA
LOOP A

Data Received by Plant Personnel

	DATE	TIME	VNORM M1, P1	VNORM M1, P2	VNORM M1, P3	VNORM M1, P4	Short Avg.	Long Avg.	S/L
133	10/6/01	12:37:04	0.931569	1.037217	1.023558	0.857652	0.894611	1.030387	0.868
134	10/6/01	13:37:09	0.95617	1.041084	1.014009	0.85275	0.90446	1.027547	0.880
135	10/6/01	14:37:14	0.981016	1.04572	1.003372	0.848733	0.914874	1.024546	0.893
136	10/6/01	15:37:19	0.983483	1.046115	1.002563	0.847688	0.915586	1.024339	0.894
137	10/6/01	16:37:24	0.976356	1.043928	1.006061	0.850263	0.91331	1.024995	0.891
138	10/6/01	17:37:30	0.972266	1.043657	1.007316	0.85096	0.911613	1.025486	0.889
139	10/6/01	19:05:03	0.939903	1.008246	0.974203	0.823093	0.881498	0.991224	0.889
140	10/6/01	20:05:09	0.971267	1.04306	1.00795	0.851826	0.911546	1.025505	0.889
141	10/6/01	21:05:14	0.970075	1.042778	1.008554	0.851899	0.910987	1.025666	0.888
142	10/6/01	22:05:19	0.968781	1.042657	1.008944	0.852263	0.910522	1.0258	0.888
143	10/6/01	23:05:24	0.968545	1.042203	1.009547	0.85198	0.910263	1.025875	0.887
144	10/7/01	0:05:29	0.968619	1.042056	1.009591	0.852257	0.910438	1.025824	0.888
145	10/7/01	1:05:35	0.967196	1.041938	1.010146	0.85217	0.909683	1.026042	0.887
146	10/7/01	2:05:40	0.966325	1.041626	1.010619	0.852474	0.9094	1.026123	0.886
147	10/7/01	3:05:45	0.966818	1.042383	1.009713	0.852497	0.909657	1.026048	0.887
148	10/7/01	4:05:50	0.967062	1.041676	1.010334	0.852551	0.909806	1.026005	0.887
149	10/7/01	5:05:55	0.963437	1.041647	1.011288	0.852982	0.908209	1.026468	0.885

Plant Name: Susquehanna Unit 2 Loop B

Feedwater Measurement System: LEFM✓

Installation Geometry: 10 Diameters Downstream from a 90° Bend

Non-planar bend 17 Diameters Upstream

Chordal Meter Measurement Error = 0.01%

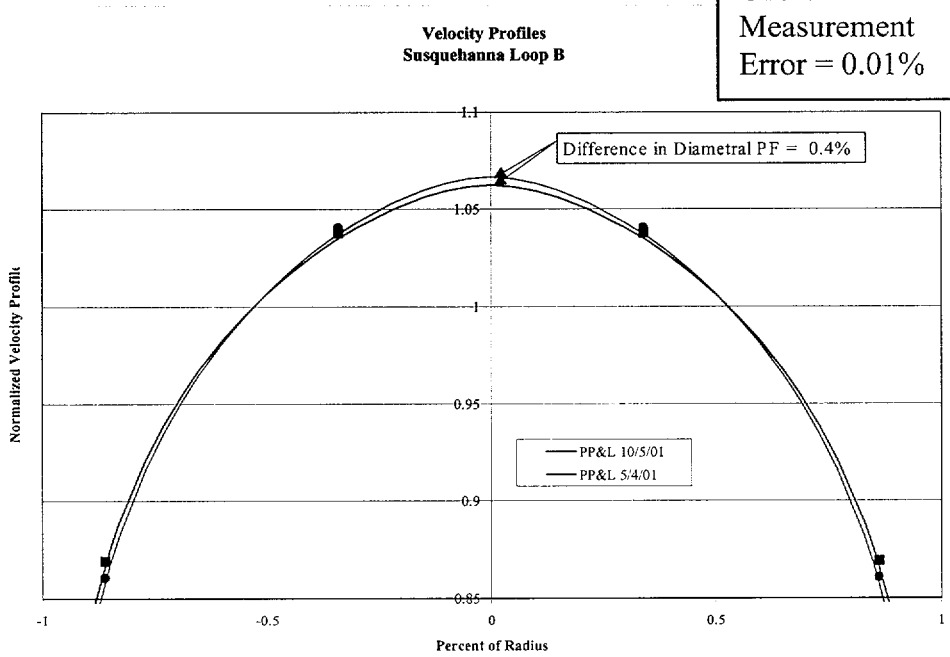

TYPICAL PIPING CONFIGURATION
AND LEFM LOCATION
PP&L SUSQUEHANNA
LOOP B

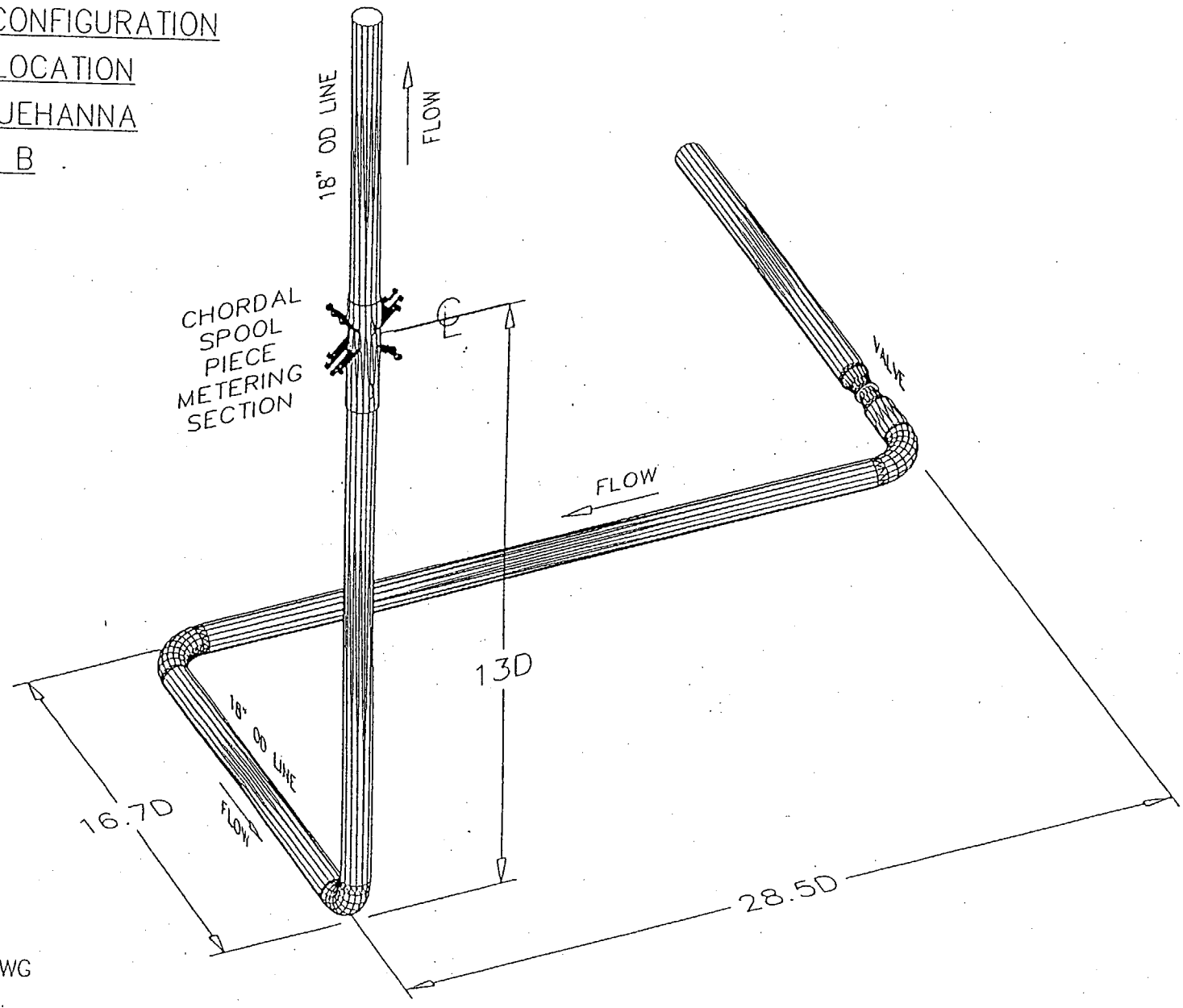

CALDON

SKETCH SKRSH-35B.DWG

Data Received by Plant Personnel

	DATE	TIME	VNORM M2, P1	VNORM M2, P2	VNORM M2, P3	VNORM M2, P4	Short Avg.	Long Avg.	S/L
95	10/4/01	22:34:47	0.8584	1.029299	1.046331	0.87931	0.868855	1.037815	0.837
96	10/4/01	23:34:52	0.858327	1.029064	1.046604	0.879243	0.868785	1.037834	0.837
97	10/5/01	0:34:57	0.858075	1.029354	1.046389	0.879237	0.868656	1.037872	0.837
98	10/5/01	1:35:02	0.858352	1.029276	1.046372	0.879282	0.868817	1.037824	0.837
99	10/5/01	2:35:07	0.85833	1.029248	1.046464	0.879096	0.868713	1.037856	0.837
100	10/5/01	3:35:13	0.857994	1.02937	1.046337	0.879438	0.868716	1.037854	0.837
101	10/5/01	4:35:18	0.858446	1.029274	1.046358	0.879252	0.868849	1.037816	0.837
102	10/5/01	5:35:23	0.858421	1.029451	1.046229	0.879113	0.868767	1.03784	0.837
103	10/5/01	6:35:28	0.858379	1.029293	1.046403	0.879103	0.868741	1.037848	0.837
104	10/5/01	7:35:33	0.858999	1.029274	1.046164	0.879361	0.86918	1.037719	0.838
105	10/5/01	8:35:38	0.858118	1.029351	1.046412	0.879134	0.868626	1.037881	0.837
106	10/5/01	9:34:44	0.857948	1.029428	1.046339	0.879293	0.868621	1.037883	0.837
107	10/5/01	10:34:49	0.858131	1.029239	1.046535	0.87908	0.868606	1.037887	0.837
108	10/5/01	11:34:54	0.858522	1.029101	1.046441	0.879489	0.869005	1.037771	0.837
109	10/5/01	12:34:59	0.85829	1.029324	1.04635	0.879256	0.868773	1.037837	0.837
110	10/5/01	13:35:04	0.858456	1.029479	1.046244	0.878926	0.868691	1.037861	0.837

Plant Name: Susquehanna Unit 2 Loop C

Feedwater Measurement System: LEFM✓

Installation Geometry: 10 Diameters Downstream from a 90° Bend

Non-planar bend 17 Diameters Upstream

Chordal Meter Measurement Error = 0.01%

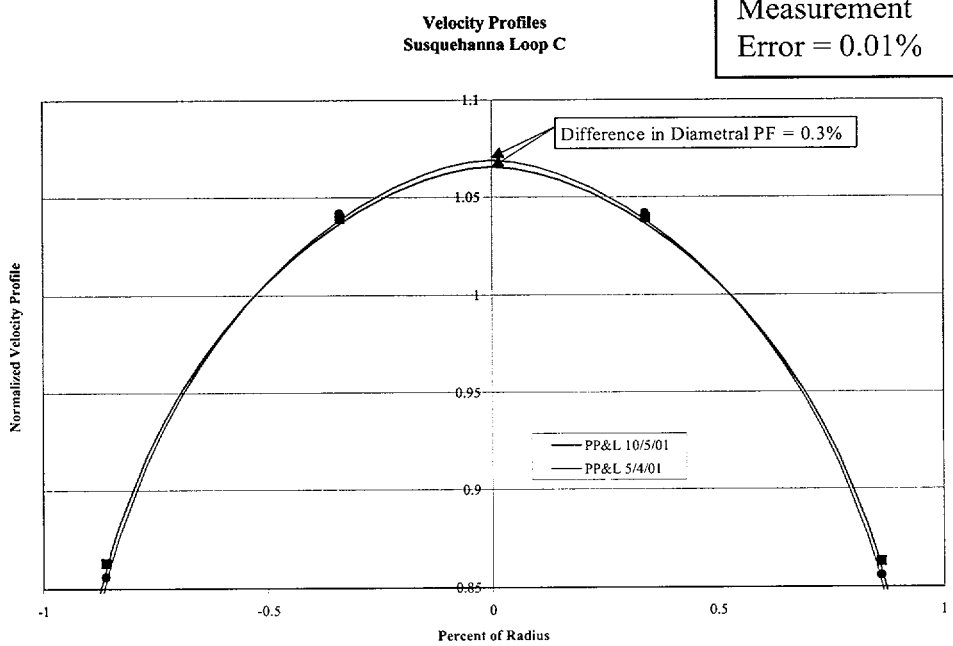

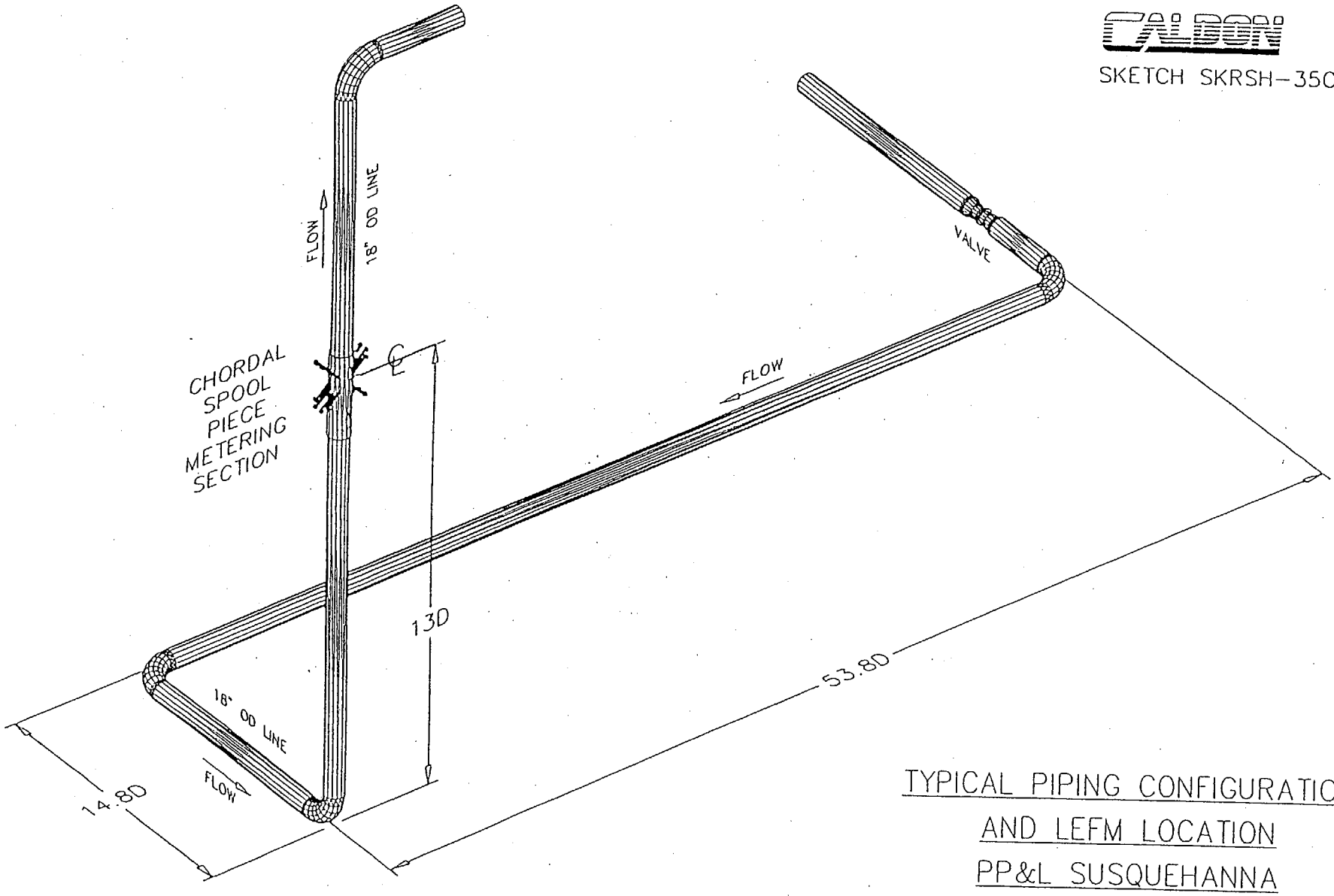

TYPICAL PIPING CONFIGURATION
AND LEFM LOCATION
PP&L SUSQUEHANNA
LOOP C

Data Received by Plant Personnel

	DATE	TIME	VNORM M3, P1	VNORM M3, P2	VNORM M3, P3	VNORM M3, P4	Short Avg.	Long Avg.	S/L
109	10/5/01	12:34:59	0.870465	1.030248	1.0488	0.855393	0.862929	1.039524	0.830
110	10/5/01	13:35:04	0.869863	1.030256	1.048903	0.855594	0.862729	1.039579	0.830
111	10/5/01	14:35:10	0.869964	1.030384	1.048817	0.855356	0.86266	1.039601	0.830
112	10/5/01	15:35:15	0.870409	1.030193	1.048877	0.855363	0.862886	1.039535	0.830
113	10/5/01	16:35:20	0.869652	1.030225	1.049009	0.855552	0.862602	1.039617	0.830
114	10/5/01	17:35:25	0.86979	1.030176	1.048998	0.855629	0.86271	1.039587	0.830
115	10/5/01	18:35:30	0.869946	1.03033	1.048979	0.855002	0.862474	1.039654	0.830
116	10/5/01	19:35:35	0.870376	1.030603	1.048459	0.855435	0.862905	1.039531	0.830
117	10/5/01	20:35:41	0.869924	1.030366	1.048768	0.855638	0.862781	1.039567	0.830
118	10/5/01	21:35:46	0.870015	1.030551	1.048605	0.855456	0.862735	1.039578	0.830
119	10/5/01	22:35:51	0.870349	1.03016	1.049047	0.854947	0.862648	1.039603	0.830
120	10/5/01	23:35:56	0.87075	1.030298	1.048586	0.855666	0.863208	1.039442	0.830
121	10/6/01	0:36:01	0.870223	1.030536	1.0486	0.855323	0.862773	1.039568	0.830
122	10/6/01	1:36:07	0.869851	1.030667	1.048538	0.855451	0.862651	1.039603	0.830
123	10/6/01	2:36:12	0.869714	1.030353	1.048966	0.855188	0.862451	1.039659	0.830
124	10/6/01	3:36:17	0.870174	1.030264	1.048833	0.85551	0.862842	1.039548	0.830
125	10/6/01	4:36:22	0.870365	1.030263	1.048813	0.855385	0.862875	1.039538	0.830

Susquehanna Unit 2 12:09:22 2001/05/04

Configuration Files

ALARM.INI	2001/05/04	11:46:46	FFFF5F6D
FAT.INI	2001/04/16	20:54:32	FFFFD4A7
HYDRAULI.INI	2001/05/04	11:45:52	FFFF94D7
METER.INI	2001/05/03	16:47:26	FFFD2091
PARAMETR.INI	2001/04/24	15:06:08	FFFC6D3D
P_CONFIG.INI	2001/05/03	16:01:44	FFFEA975
PROPERTY.INI	2001/04/16	21:17:40	FFFFEC75
SETUP.INI	2001/05/04	11:41:54	FFFEE167

Setup Files

Setapu1.txt	2001/05/03	08:40:10	FFFE17FD
Setapu2.txt	2001/05/03	10:13:30	FFFE17FD
Setapu3.txt	2001/05/03	08:40:48	FFFE17F7
Setapu4.txt	2001/04/16	21:46:14	FFFE18E7

Susquehanna Unit 2 Current Flow:	71.18
Susquehanna Unit 2 Average Flow:	71.17
Susquehanna Unit 2 Maximum Flow:	71.24
Susquehanna Unit 2 Minimum Flow:	71.08
Susquehanna Unit 2 Deviation Flow:	0.04
Susquehanna Unit 2 Current Temp:	385.8
Susquehanna Unit 2 Average Temp:	385.7
Susquehanna Unit 2 Maximum Temp:	385.8
Susquehanna Unit 2 Minimum Temp:	370.0
Susquehanna Unit 2 Deviation Temp:	1.0
Susquehanna Unit 2 Current System Status:	NORMAL
Susquehanna Unit 2 Minimum System Status:	FAIL
Susquehanna Unit 2 Current Mass Flow:	13.970
Susquehanna Unit 2 Average Mass Flow:	13.968
Susquehanna Unit 2 Maximum Mass Flow:	14.111
Susquehanna Unit 2 Minimum Mass Flow:	13.950
Susquehanna Unit 2 Deviation Mass Flow:	0.012
Susquehanna Unit 2 Uncertainty:	0.03

Meter 1 Current Flow:	23.66
Meter 1 Average Flow:	23.68
Meter 1 Maximum Flow:	23.77
Meter 1 Minimum Flow:	23.61
Meter 1 Deviation Flow:	0.04
Meter 2 Current Flow:	23.81
Meter 2 Average Flow:	23.84
Meter 2 Maximum Flow:	23.94
Meter 2 Minimum Flow:	23.75
Meter 2 Deviation Flow:	0.05
Meter 3 Current Flow:	23.71
Meter 3 Average Flow:	23.65
Meter 3 Maximum Flow:	23.82
Meter 3 Minimum Flow:	23.47

Meter 3 Deviation Flow:	0.09
Meter 1 Current Temp:	387.1
Meter 1 Average Temp:	387.0
Meter 1 Maximum Temp:	387.1
Meter 1 Minimum Temp:	371.3
Meter 1 Deviation Temp:	1.0
Meter 2 Current Temp:	385.4
Meter 2 Average Temp:	385.4
Meter 2 Maximum Temp:	385.5
Meter 2 Minimum Temp:	369.6
Meter 2 Deviation Temp:	1.0
Meter 3 Current Temp:	384.8
Meter 3 Average Temp:	384.8
Meter 3 Maximum Temp:	384.9
Meter 3 Minimum Temp:	369.0
Meter 3 Deviation Temp:	1.0
Meter 1 Current Press:	1105.00
Meter 1 Average Press:	1002.21
Meter 1 Maximum Press:	1105.00
Meter 1 Minimum Press:	0.00
Meter 1 Deviation Press:	1.03
Meter 2 Current Press:	1106.10
Meter 2 Average Press:	1003.21
Meter 2 Maximum Press:	1106.10
Meter 2 Minimum Press:	0.00
Meter 2 Deviation Press:	1.03
Meter 3 Current Press:	1104.40
Meter 3 Average Press:	1001.67
Meter 3 Maximum Press:	1104.40
Meter 3 Minimum Press:	0.00
Meter 3 Deviation Press:	1.03
Meter 1 Current Meter Status:	NORMAL
Meter 1 Minimum Meter Status:	FAIL
Meter 2 Current Meter Status:	NORMAL
Meter 2 Minimum Meter Status:	FAIL
Meter 3 Current Meter Status:	NORMAL
Meter 3 Minimum Meter Status:	FAIL
Meter 1 Current Mass Flow:	4.639
Meter 1 Average Mass Flow:	4.643
Meter 1 Maximum Mass Flow:	4.693
Meter 1 Minimum Mass Flow:	4.629
Meter 1 Deviation Mass Flow:	0.009
Meter 2 Current Mass Flow:	4.675
Meter 2 Average Mass Flow:	4.679
Meter 2 Maximum Mass Flow:	4.729
Meter 2 Minimum Mass Flow:	4.662

Meter 2 Deviation Mass Flow:	0.010
Meter 3 Current Mass Flow:	4.656
Meter 3 Average Mass Flow:	4.645
Meter 3 Maximum Mass Flow:	4.689
Meter 3 Minimum Mass Flow:	4.609
Meter 3 Deviation Mass Flow:	0.018
Meter 1 Uncertainty:	0.06
Meter 2 Uncertainty:	0.04
Meter 3 Uncertainty:	0.04

	Path 1	Path 2	Path 3	Path 4
Meter 1 Current Variance:	10611.80	9480.00	6556.76	2452.37
Meter 2 Current Variance:	2306.92	3502.04	3445.44	2121.49
Meter 3 Current Variance:	2339.39	3411.16	3430.44	2677.44
Meter 1 Average Vnorm:	0.9309	1.0403	1.0224	0.8519
Meter 1 Current Vnorm:	0.9300	1.0380	1.0243	0.8541
Meter 1 Maximum Vnorm:	0.9395	1.0425	1.0251	0.8547
Meter 1 Minimum Vnorm:	0.9220	1.0380	1.0197	0.8487
Meter 1 Deviation Vnorm:	0.003	0.001	0.001	0.002
Meter 1 Benchmark Vnorm:	0.9301	1.0399	1.0229	0.8520
Meter 1 Limit % Vnorm:	0.50	0.50	0.50	0.50
Meter 2 Average Vnorm:	0.8524	1.0315	1.0490	0.8685
Meter 2 Current Vnorm:	0.8543	1.0315	1.0479	0.8703
Meter 2 Maximum Vnorm:	0.8551	1.0328	1.0500	0.8712
Meter 2 Minimum Vnorm:	0.8503	1.0300	1.0477	0.8663
Meter 2 Deviation Vnorm:	0.001	0.001	0.000	0.001
Meter 2 Benchmark Vnorm:	0.8522	1.0316	1.0490	0.8684
Meter 2 Limit % Vnorm:	0.50	0.50	0.50	0.50
Meter 3 Average Vnorm:	0.8616	1.0324	1.0507	0.8500
Meter 3 Current Vnorm:	0.8602	1.0330	1.0505	0.8504
Meter 3 Maximum Vnorm:	0.8651	1.0342	1.0520	0.8533
Meter 3 Minimum Vnorm:	0.8580	1.0311	1.0495	0.8468
Meter 3 Deviation Vnorm:	0.002	0.001	0.001	0.002
Meter 3 Benchmark Vnorm:	0.8616	1.0326	1.0506	0.8500
Meter 3 Limit % Vnorm:	0.50	0.50	0.50	0.50
Meter 1 Average Gain:	46.85	50.73	51.38	46.50
Meter 1 Current Gain:	46.89	50.72	51.34	46.61
Meter 1 Maximum Gain:	46.94	50.79	51.46	46.62
Meter 1 Minimum Gain:	46.77	50.67	51.32	46.43
Meter 1 Deviation Gain:	0.04	0.03	0.03	0.03
Meter 1 Limit Gain:	76.00	76.00	76.00	76.00
Meter 1 Current Gain Up:	45.85	50.70	51.49	45.69
Meter 1 Current Gain Down:	47.79	50.55	51.02	47.48
Meter 1 Current TPGain Up:	64.13	63.82	63.97	64.13
Meter 1 Current TPGain Down:	63.82	63.82	63.82	63.97
Meter 2 Average Gain:	44.93	48.41	47.81	48.25

Meter 2 Current Gain:	44.93	48.43	47.79	48.29
Meter 2 Maximum Gain:	44.98	48.46	47.86	48.32
Meter 2 Minimum Gain:	44.88	48.37	47.77	48.19
Meter 2 Deviation Gain:	0.02	0.02	0.02	0.03
Meter 2 Limit Gain:	76.00	76.00	76.00	76.00
Meter 2 Current Gain Up:	44.28	48.58	48.10	47.95
Meter 2 Current Gain Down:	45.38	48.10	47.32	48.42
Meter 2 Current TPGain Up:	63.97	63.97	63.82	63.97
Meter 2 Current TPGain Down:	63.82	63.82	63.66	63.66
Meter 3 Average Gain:	44.20	48.55	47.08	43.29
Meter 3 Current Gain:	44.28	48.56	47.09	43.23
Meter 3 Maximum Gain:	44.28	48.63	47.16	43.40
Meter 3 Minimum Gain:	44.08	48.46	46.93	43.21
Meter 3 Deviation Gain:	0.04	0.03	0.06	0.05
Meter 3 Limit Gain:	76.00	76.00	76.00	76.00
Meter 3 Current Gain Up:	43.50	48.73	47.48	42.87
Meter 3 Current Gain Down:	44.91	48.26	46.54	43.50
Meter 3 Current TPGain Up:	63.66	63.82	63.50	63.66
Meter 3 Current TPGain Down:	63.66	63.66	63.50	63.82
Meter 1 Average S/N Ratio:	97.20	97.09	96.51	96.22
Meter 1 Current S/N Ratio:	97.52	97.26	96.48	95.99
Meter 1 Maximum S/N Ratio:	97.70	97.38	96.84	96.75
Meter 1 Minimum S/N Ratio:	95.13	94.84	94.47	94.85
Meter 1 Deviation S/N Ratio:	0.33	0.32	0.30	0.28
Meter 2 Average S/N Ratio:	87.80	90.28	88.97	86.87
Meter 2 Current S/N Ratio:	87.98	88.75	87.07	86.46
Meter 2 Maximum S/N Ratio:	92.00	95.06	93.49	92.23
Meter 2 Minimum S/N Ratio:	84.45	88.25	86.37	84.25
Meter 2 Deviation S/N Ratio:	1.44	1.48	1.30	1.41
Meter 3 Average S/N Ratio:	18.97	56.05	41.71	15.81
Meter 3 Current S/N Ratio:	19.28	57.13	43.11	15.80
Meter 3 Maximum S/N Ratio:	19.69	57.34	43.59	16.24
Meter 3 Minimum S/N Ratio:	18.18	53.56	39.98	15.39
Meter 3 Deviation S/N Ratio:	0.30	0.63	0.88	0.16
Meter 1 Average TDown:	244697	395163	395068	244698
Meter 1 Current TDown:	244696	395164	395064	244696
Meter 1 Maximum TDown:	244713	395189	395094	244713
Meter 1 Minimum TDown:	244683	395142	395049	244687
Meter 1 Deviation TDown:	6	10	10	5
Meter 1 Current TPTDown:	4500555	4500554	4500554	4500556
Meter 2 Average TDown:	244412	394581	394223	244057
Meter 2 Current TDown:	244411	394583	394227	244057
Meter 2 Maximum TDown:	244427	394605	394247	244071
Meter 2 Minimum TDown:	244398	394556	394201	244044
Meter 2 Deviation TDown:	7	11	11	6
Meter 2 Current TPTDown:	4500594	4500596	4500599	4500595
Meter 3 Average TDown:	243956	393939	394092	243980
Meter 3 Current TDown:	243952	393929	394083	243975
Meter 3 Maximum TDown:	243967	393962	394113	243993
Meter 3 Minimum TDown:	243944	393920	394074	243968

Meter 3 Deviation TDown:	7	12	11	7
Meter 3 Current TPTDown:	4500464	4500468	4500464	4500462
Meter 1 Average DeltaT:	1135.4	2346.7	2307.8	1043.4
Meter 1 Current DeltaT:	1133.2	2339.3	2310.0	1045.0
Meter 1 Maximum DeltaT:	1146.3	2355.9	2321.6	1049.8
Meter 1 Minimum DeltaT:	1126.9	2338.6	2299.8	1039.2
Meter 1 Deviation DeltaT:	4.3	5.0	4.7	2.7
Meter 1 Current TPDeltaT:	-0.6	2.2	2.2	-0.6
Meter 2 Average DeltaT:	1043.2	2315.6	2352.7	1047.8
Meter 2 Current DeltaT:	1044.5	2313.6	2348.0	1048.9
Meter 2 Maximum DeltaT:	1048.5	2324.6	2363.7	1053.5
Meter 2 Minimum DeltaT:	1038.3	2308.0	2343.4	1043.6
Meter 2 Deviation DeltaT:	2.2	4.4	5.2	2.5
Meter 2 Current TPDeltaT:	-2.9	-0.9	-3.8	-1.1
Meter 3 Average DeltaT:	1041.0	2306.7	2349.4	1031.1
Meter 3 Current DeltaT:	1041.8	2313.5	2354.8	1034.1
Meter 3 Maximum DeltaT:	1052.6	2322.7	2367.0	1039.6
Meter 3 Minimum DeltaT:	1034.5	2287.3	2332.7	1021.2
Meter 3 Deviation DeltaT:	4.2	9.4	8.7	4.9
Meter 3 Current TPDeltaT:	0.4	-4.2	2.2	-2.2
Meter 1 Current Path Status:	NORMAL	NORMAL	NORMAL	NORMAL
Meter 1 Minimum Path Status:	FAIL	FAIL	FAIL	FAIL
Meter 2 Current Path Status:	NORMAL	NORMAL	NORMAL	NORMAL
Meter 2 Minimum Path Status:	FAIL	FAIL	FAIL	FAIL
Meter 3 Current Path Status:	NORMAL	NORMAL	NORMAL	NORMAL
Meter 3 Minimum Path Status:	FAIL	FAIL	FAIL	FAIL
Meter 1 Average Reject %:	0.1	0.1	0.1	0.1
Meter 1 Current Reject %:	0.0	0.0	0.0	0.0
Meter 1 Maximum Reject %:	4.2	4.2	4.2	4.2
Meter 1 Minimum Reject %:	0.0	0.0	0.0	0.0
Meter 1 Deviation Reject %:	0.5	0.5	0.5	0.5
Meter 1 Incoming Samples:	258	258	258	258
Meter 1 Number Failed Rejects:	0	0	0	0
Meter 2 Average Reject %:	0.0	0.0	0.0	0.0
Meter 2 Current Reject %:	0.0	0.0	0.0	0.0
Meter 2 Maximum Reject %:	0.0	0.0	0.0	0.0
Meter 2 Minimum Reject %:	0.0	0.0	0.0	0.0
Meter 2 Deviation Reject %:	0.0	0.0	0.0	0.0
Meter 2 Incoming Samples:	258	258	258	258
Meter 2 Number Failed Rejects:	0	0	0	0
Meter 3 Average Reject %:	0.0	0.0	0.0	0.1
Meter 3 Current Reject %:	0.0	0.0	0.0	0.0
Meter 3 Maximum Reject %:	0.0	0.0	0.0	0.3
Meter 3 Minimum Reject %:	0.0	0.0	0.0	0.0
Meter 3 Deviation Reject %:	0.0	0.0	0.0	0.1
Meter 3 Incoming Samples:	258	258	258	258
Meter 3 Number Failed Rejects:	0	0	0	0

```
DEFAULTCFRATIO1:,1.0000,0.9999,1.0003,0.9998
DEFAULTCFRATIO2:,1.0003,1.0000,0.9999,0.9999
DEFAULTCFRATIO3:,1.0002,1.0000,1.0000,0.9999

DEFAULTVELOCITY1:,0.9328,1.0400,1.0217,0.8531
DEFAULTVELOCITY2:,0.8533,1.0311,1.0489,0.8690
DEFAULTVELOCITY3:,0.8632,1.0323,1.0502,0.8507

SOUNDVELOCITYNOM1:,50300
SOUNDVELOCITYNOM2:,50300
SOUNDVELOCITYNOM3:,50300

PROFILEFACTORCOEFA01:,1.0038E+000
PROFILEFACTORCOEFA02:,1.0101E+000
PROFILEFACTORCOEFA03:,1.0068E+000

MAXN:,720
```

PP&L Unit 2

Data taken from commissioning and from plant personnel during the velocity profile alarm

Meter 1	5/4/01	10/9/01	10/12/01
-0.861136	0.9310	0.9510	0.9319
-0.339981	1.0403	1.0391	1.0374
0.33998	1.0223	1.0167	1.0232
0.86114	0.8519	0.8555	0.8580
S/L	0.864	0.879	0.869

Meter 2	5/4/01	10/9/01	10/12/01
-0.861136	0.8524	0.8581	0.8567
-0.339981	1.0315	1.0295	1.0283
0.33998	1.0490	1.0463	1.0480
0.86114	0.8685	0.8793	0.8789
S/L	0.827	0.837	0.836

Meter 3	5/4/01	10/9/01	10/12/01
-0.861136	0.8617	0.8703	0.8699
-0.339981	1.0324	1.0304	1.0306
0.33998	1.0507	1.0488	1.0488
0.86114	0.8500	0.8551	0.8550
S/L	0.822	0.830	0.830

3

Plant Name: Indian Point Unit 2 Loop 21

Feedwater Measurement System: LEFM✓

Installation Geometry: 10 Diameters Downstream from a 90° Elbow

Non-planar bend 10 Diameters Upstream

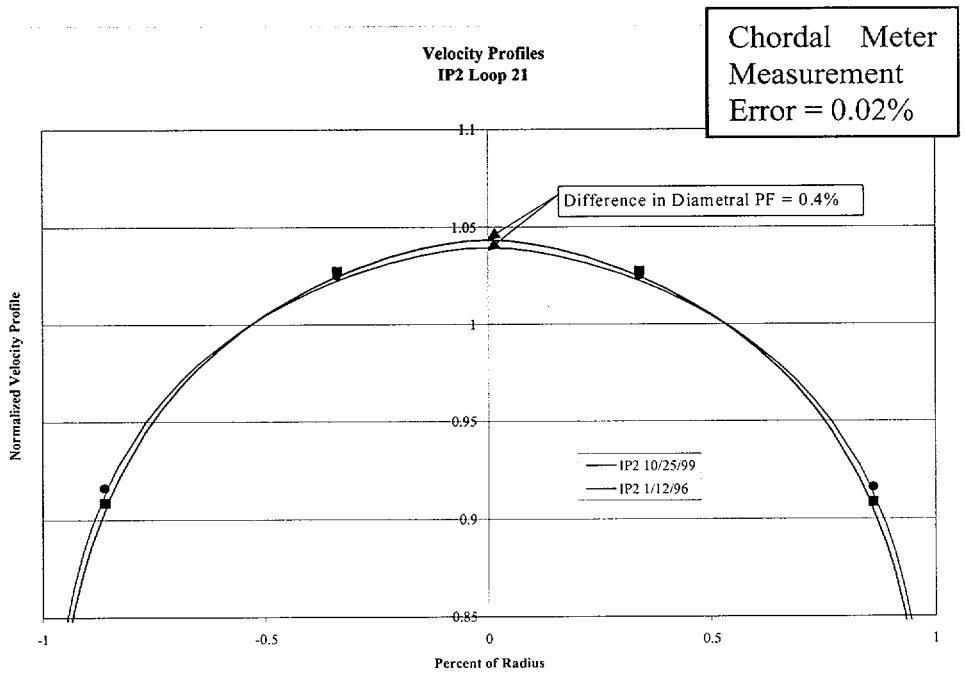

Plant Name: Indian Point Unit 2 Loop 22

Feedwater Measurement System: LEFM✓

Installation Geometry: 12 Diameters Downstream from a 90° Elbow

Non-planar bend 10 Diameters Upstream

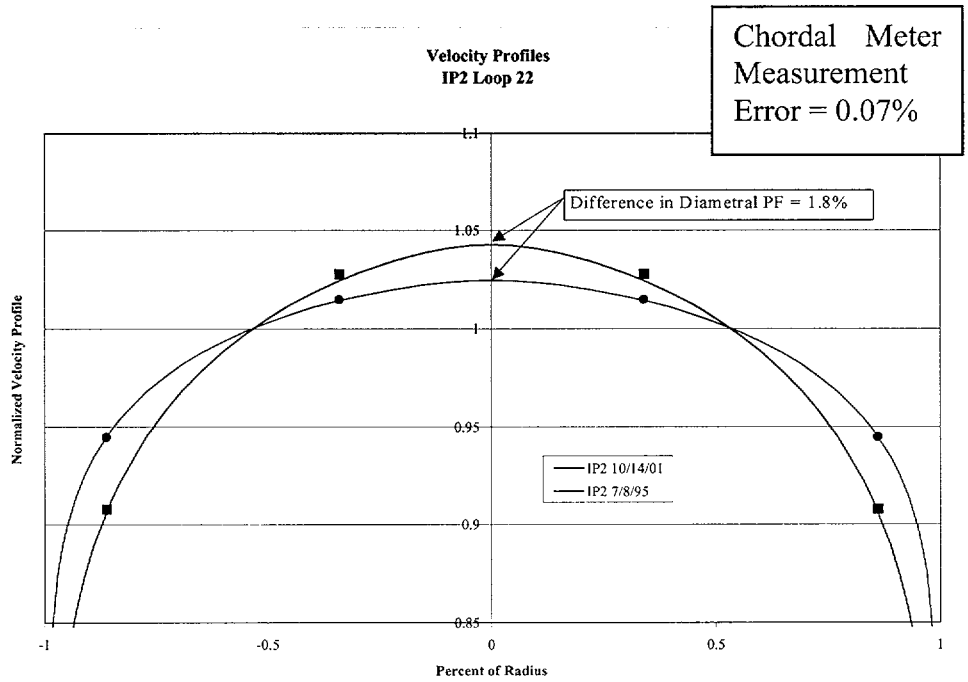

Plant Name: Indian Point Unit 2 Loop 23

Feedwater Measurement System: LEFM✓

Installation Geometry: 15 Diameters Downstream from a 90° Elbow

Non-planar bend 10 Diameters Upstream

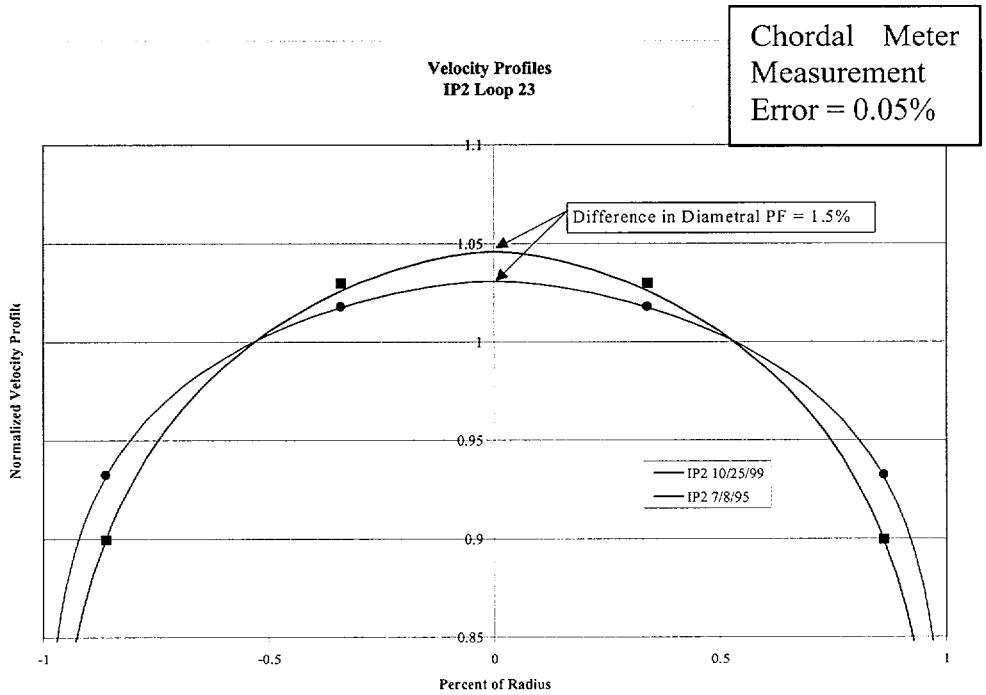

Plant Name: Indian Point Unit 2 Loop 24

Feedwater Measurement System: LEFM✓

Installation Geometry: 13 Diameters Downstream from a 90° Elbow

Non-planar bend 10 Diameters Upstream

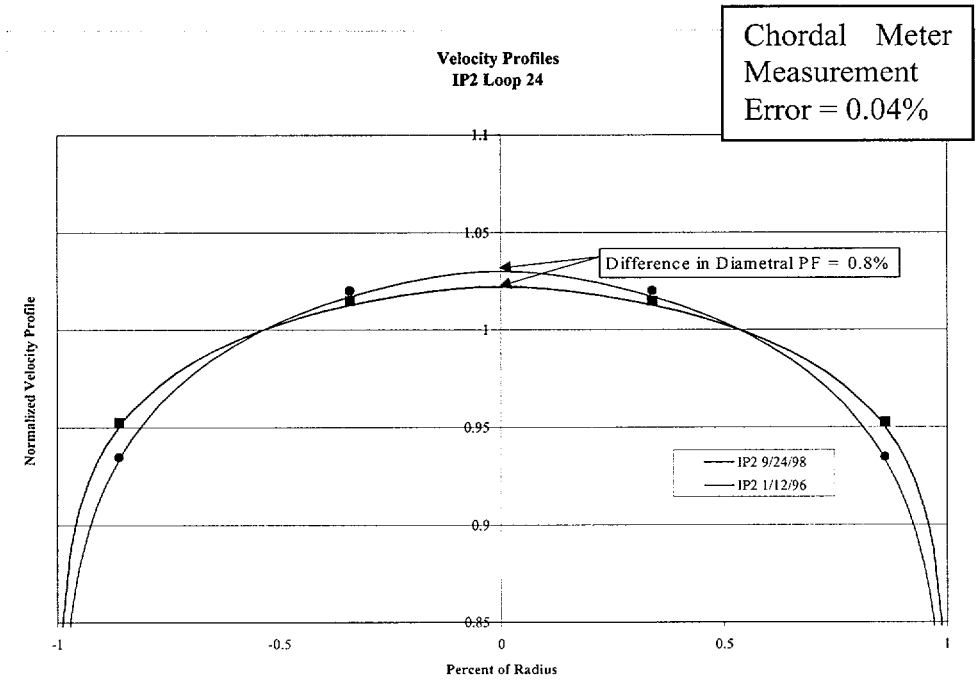

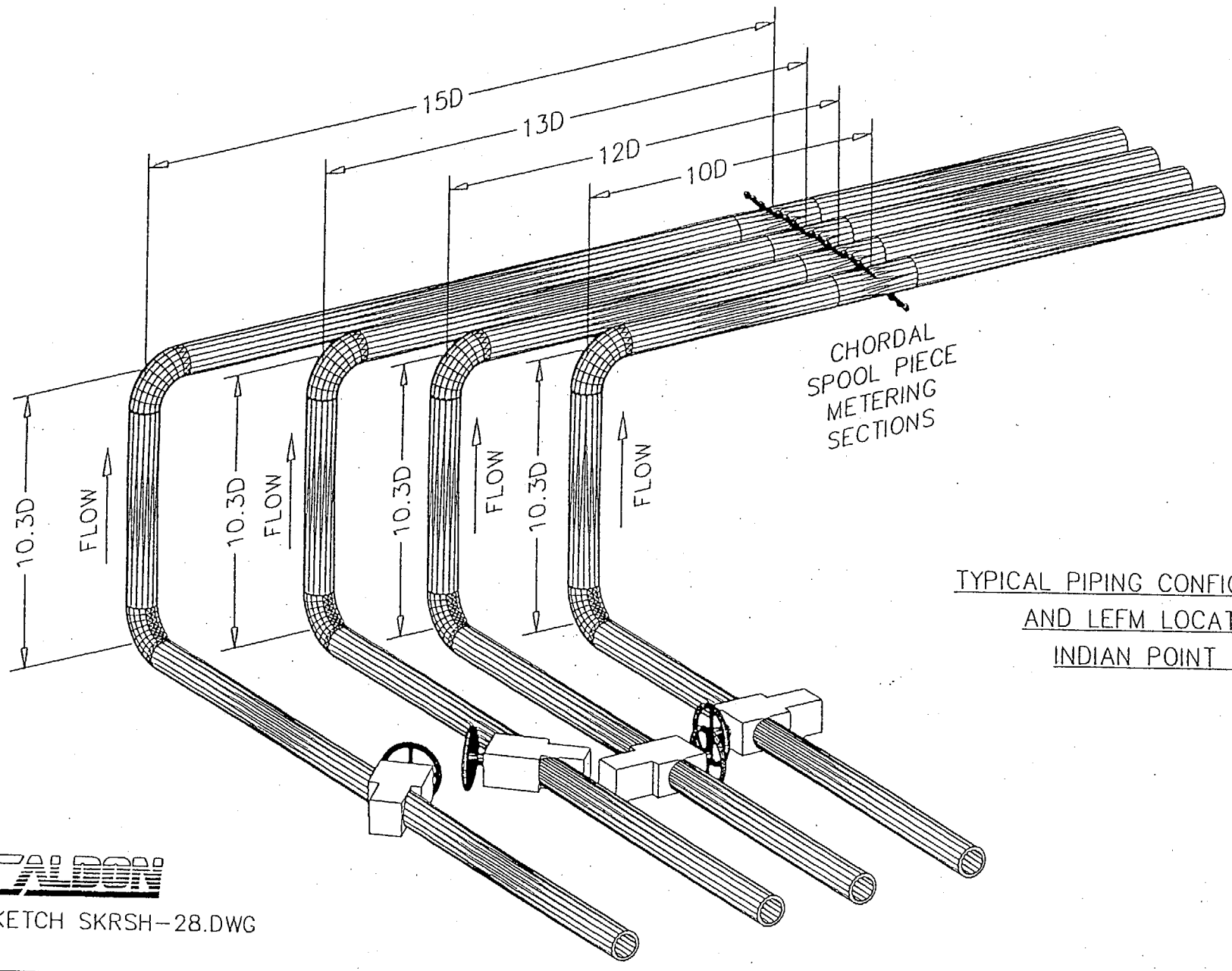

TYPICAL PIPING CONFIGURATION
AND LEFM LOCATION
INDIAN POINT 2

CALDON

SKETCH SKRSH-28.DWG

Indian Point 2 Data taken from trip reports and commissioning data

Loop 21	7/8/95	1/12/96	9/24/98	10/25/99	10/14/01
-0.861136	0.9834	1.0372	0.9099	0.8412	0.8763
-0.339981	1.0534	1.0837	1.0229	0.9868	1.0070
0.33998	0.9937	0.9671	1.0323	1.0684	1.0503
0.86114	0.8445	0.7954	0.9077	0.9762	0.9468
S/L	0.893	0.894	0.884	0.884	0.886

Loop 22	7/8/95	1/12/96	9/24/98	10/25/99	10/14/01
-0.861136	0.8920	0.8805	0.8943	0.8822	0.8744
-0.339981	0.9978	0.9933	1.0065	1.0053	1.0144
0.33998	1.0315	1.0535	1.0359	1.0460	1.0411
0.86114	0.9974	0.9661	0.9675	0.9489	0.9411
S/L	0.931	0.902	0.912	0.893	0.883

Loop 23	7/8/95	1/12/96	9/24/98	10/25/99	10/14/01
-0.861136	0.8783	0.8845	0.8122	0.7453	0.7813
-0.339981	1.0019	1.0058	0.9925	0.9696	0.9711
0.33998	1.0345	1.0379	1.0496	1.0907	1.0847
0.86114	0.9865	0.9727	1.0508	1.0543	1.0328
S/L	0.916	0.909	0.912	0.873	0.882

Loop 24	7/8/95	1/12/96	9/24/98	10/25/99	10/14/01
-0.861136	0.8257	0.8087	0.8679	0.8840	0.8822
-0.339981	0.9733	0.9726	0.9801	0.9972	1.0042
0.33998	1.0594	1.0675	1.0498	1.0390	1.0285
0.86114	1.0520	1.0611	1.0375	0.9997	0.9964
S/L	0.924	0.917	0.939	0.925	0.924

4

Plant Name: Indian Point Unit 3 Loop 33

Feedwater Measurement System: LEFM✓

Installation Geometry: 5.8 Diameters Downstream from a 90° Elbow

Non-planar bend 10 Diameters Upstream

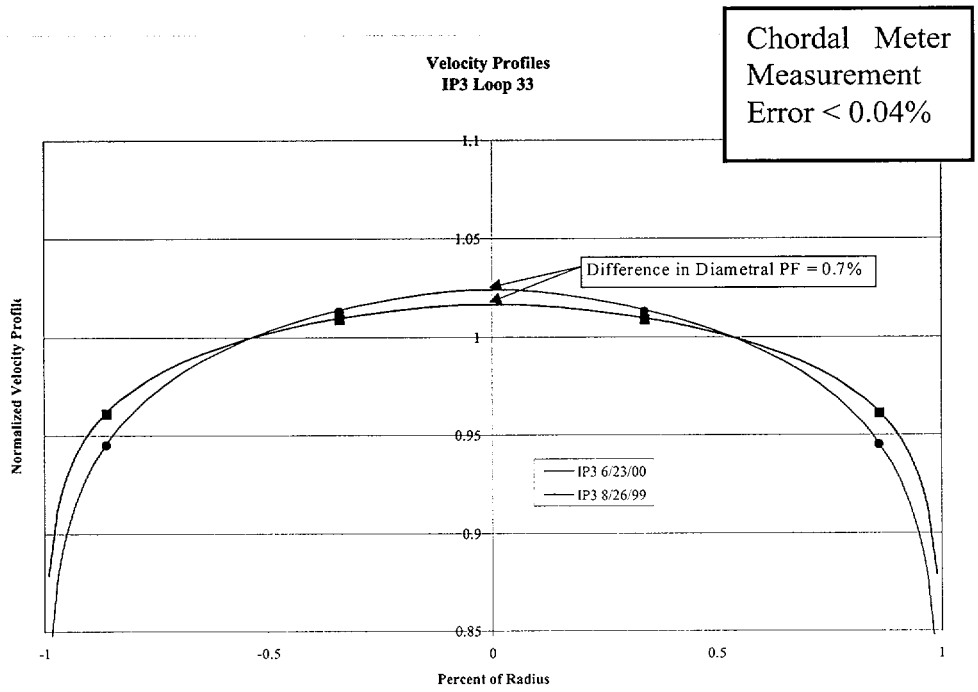

Plant Name: Indian Point Unit 3 Loop 34

Feedwater Measurement System: LEFM✓

Installation Geometry: 5.8 Diameters Downstream from a 90° Elbow

Non-planar bend 10 Diameters Upstream

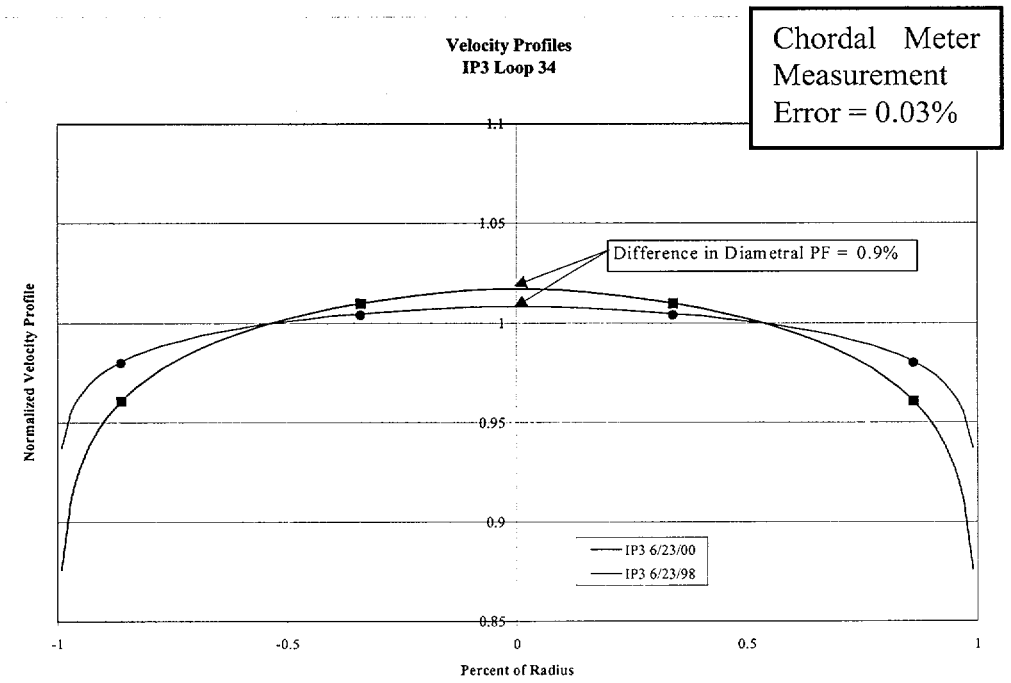

Plant Name: Indian Point Unit 3 Loop 32

Feedwater Measurement System: LEFM✓

Installation Geometry: 5.8 Diameters Downstream from a 90° Elbow

Non-planar bend 10 Diameters Upstream

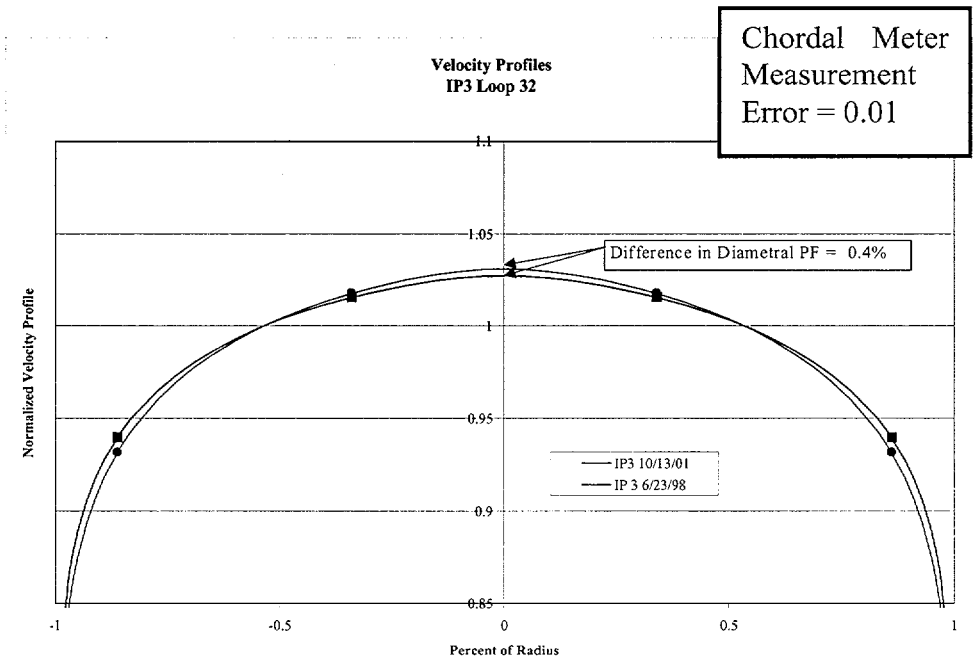

Plant Name: Indian Point Unit 3 Loop 31

Feedwater Measurement System: LEFM✓

Installation Geometry: 5.8 Diameters Downstream from a 90° Elbow

Non-planar bend 10 Diameters Upstream

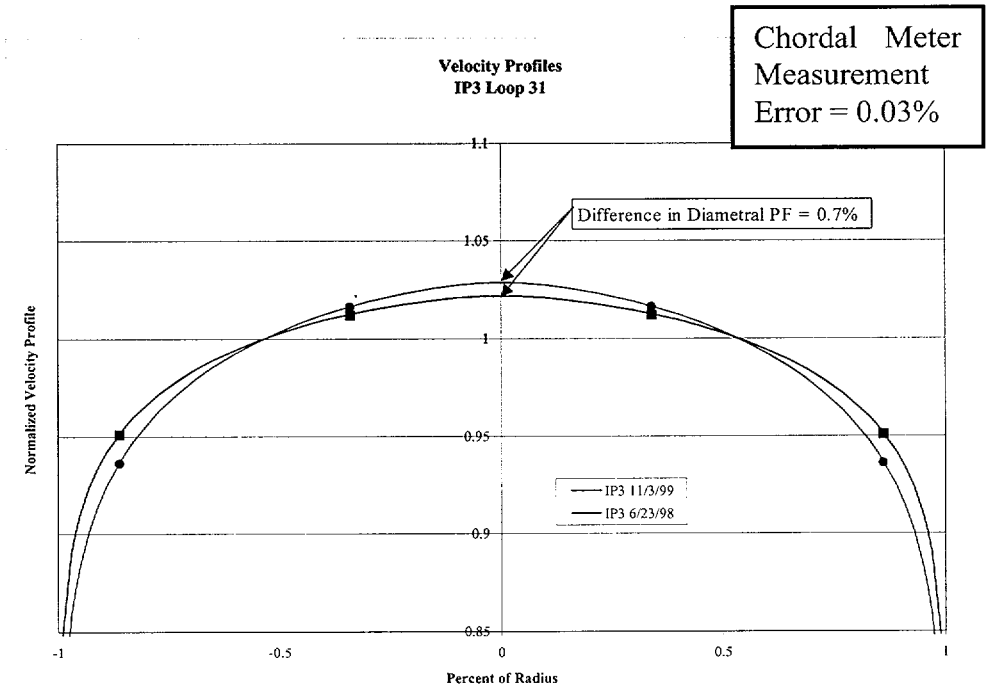

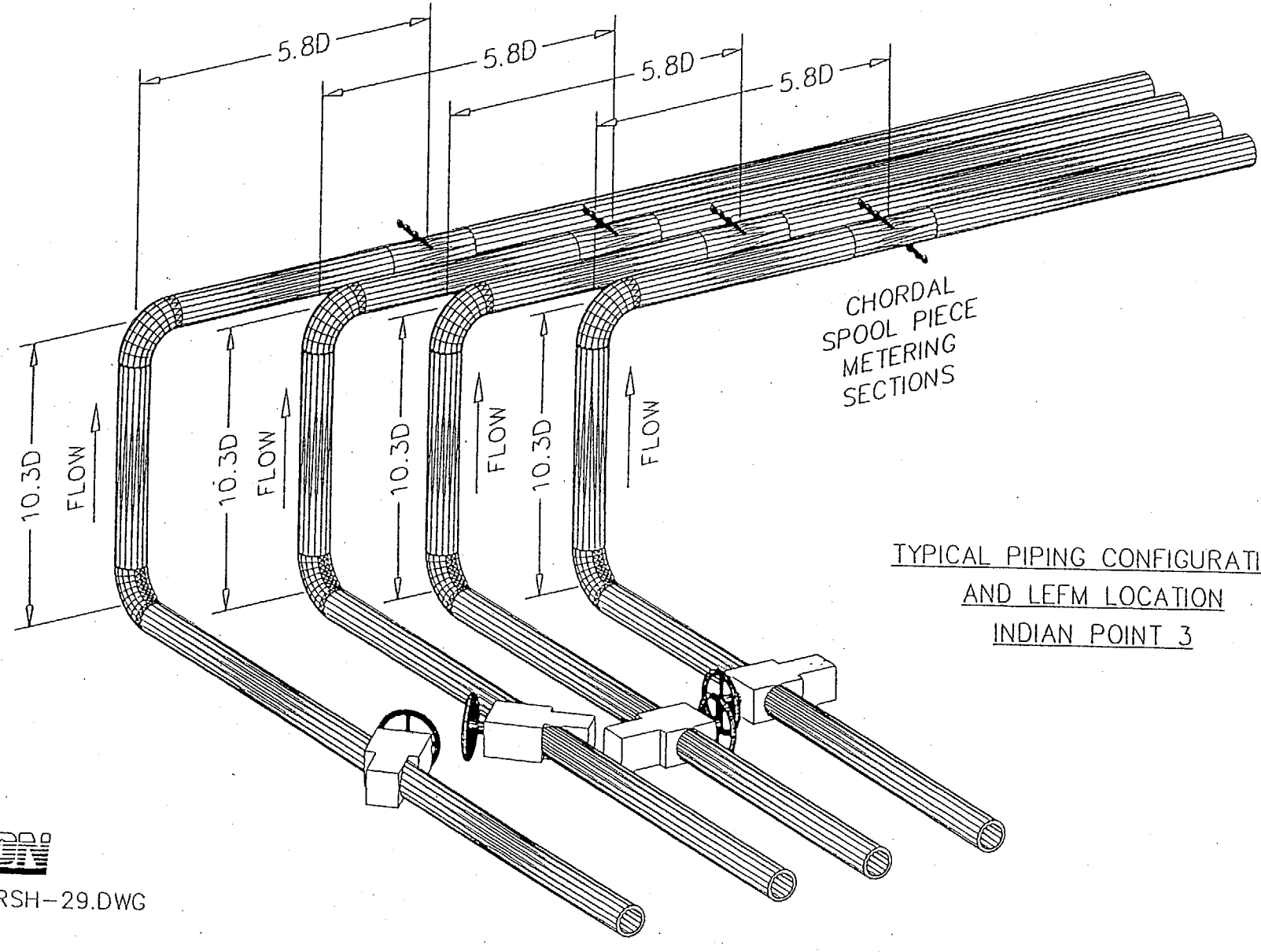

TYPICAL PIPING CONFIGURATION
AND LEFM LOCATION
INDIAN POINT 3

CALDON

SKETCH SKRSH-29.DWG

Indian Point 3 Data from remote monitoring program - found under LEFMLOGS

Loop 31	6/23/98	8/26/99	11/3/99	6/23/00	12/10/00	6/21/01	10/13/01
-0.861136	0.906	0.898	0.942	0.895	0.898	0.894	0.891
-0.339981	0.999	0.991	0.990	0.995	0.988	1.003	0.999
0.33998	1.034	1.037	1.034	1.032	1.039	1.030	1.034
0.86114	0.966	0.990	0.960	0.990	0.993	0.979	0.981
S/L	0.921	0.931	0.940	0.930	0.933	0.921	0.921

Loop 32	6/23/98	8/26/99	11/3/99	6/23/00	12/10/00	6/21/01	10/13/01
-0.861136	0.846	0.849	0.845	0.838	0.847	0.845	0.851
-0.339981	0.978	0.979	0.983	0.976	0.978	0.980	0.982
0.33998	1.057	1.054	1.050	1.058	1.055	1.053	1.049
0.86114	1.018	1.028	1.028	1.031	1.023	1.025	1.028
S/L	0.916	0.923	0.921	0.919	0.920	0.920	0.925

Loop 33	6/23/98	8/26/99	11/3/99	6/23/00	12/10/00	6/21/01	10/13/01
-0.861136	0.992	0.982	1.024	0.996	0.981	0.968	1.000
-0.339981	1.028	1.030	1.049	1.018	1.012	1.019	1.036
0.33998	0.998	0.996	0.979	1.000	1.009	1.006	0.991
0.86114	0.902	0.907	0.868	0.925	0.931	0.932	0.891
S/L	0.935	0.932	0.933	0.952	0.946	0.938	0.933

Loop 34	6/23/98	8/26/99	11/3/99	6/23/00	12/10/00	6/21/01	10/13/01
-0.861136	0.996	0.961	0.953	0.964	0.950	0.967	0.956
-0.339981	1.000	0.993	0.995	1.000	0.994	1.002	1.001
0.33998	1.008	1.019	1.018	1.019	1.020	1.013	1.015
0.86114	0.963	0.984	0.991	0.957	0.988	0.969	0.974
S/L	0.976	0.967	0.966	0.951	0.962	0.961	0.957

5

Plant Name: Comanche Peak Unit 1

Feedwater Measurement System: LEFM✓

Installation Geometry: 11.2 Diameters Downstream of a 90° Elbow

Non-planar feeds 18 Diameters Upstream

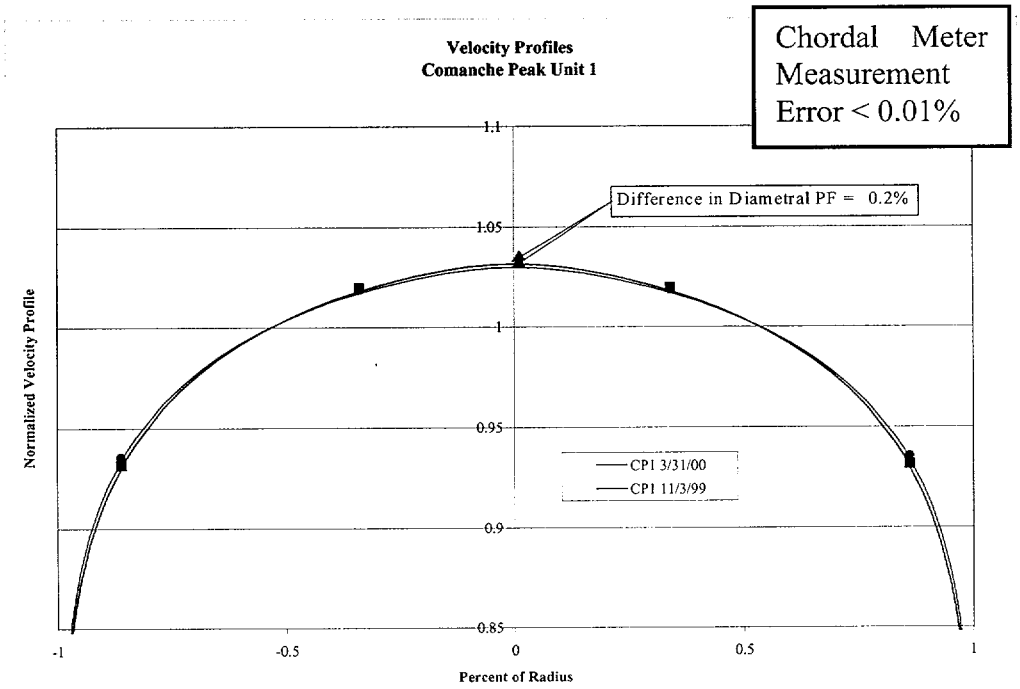

CALDON

SKETCH SKRSH-30.DWG

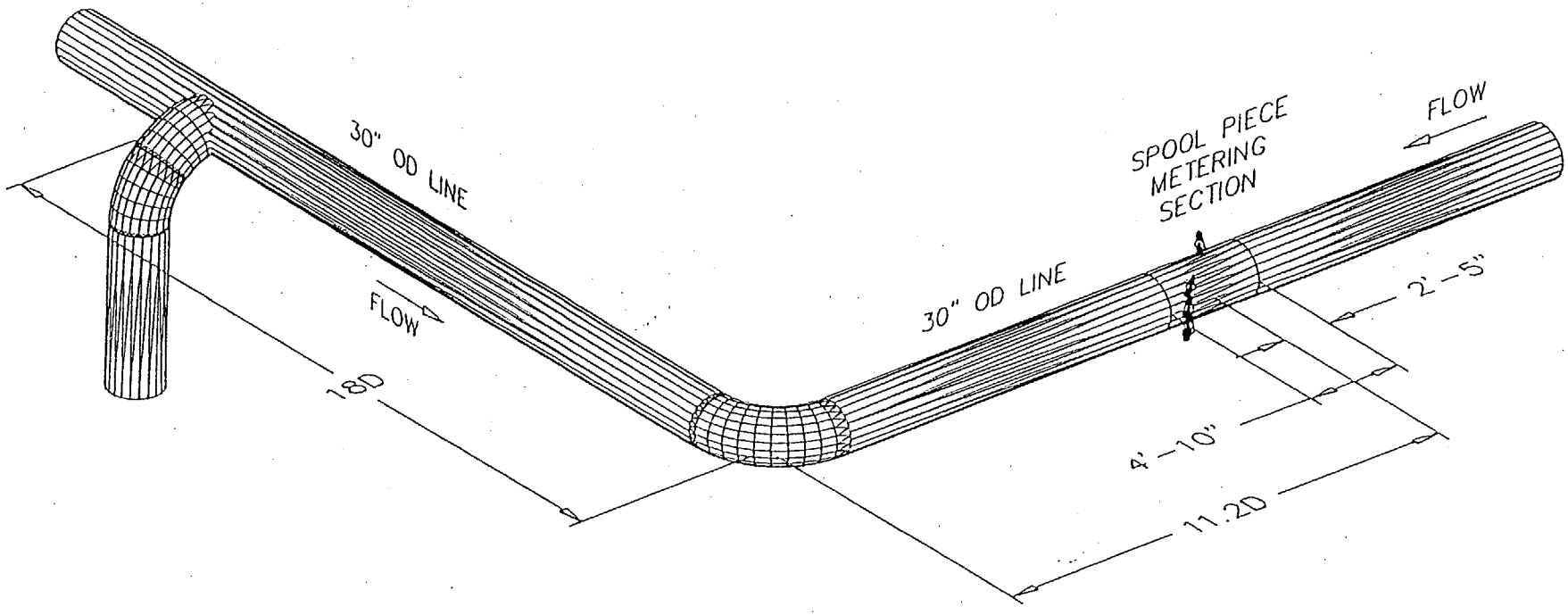

TYPICAL PIPING CONFIGURATION
AND LEFM LOCATION
COMMANCHE PEAK 1

Plant Name: Comanche Peak Unit 2

Feedwater Measurement System: LEFM✓

Installation Geometry: 11.2 Diameters Downstream of a 90° Elbow

Non-planar feeds 18 Diameters Upstream

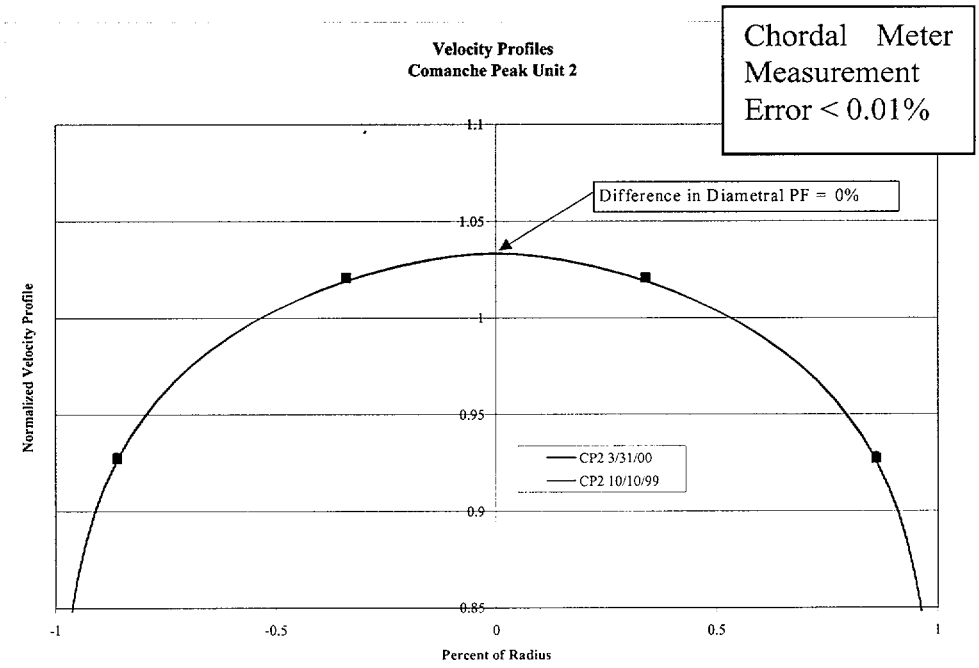

CALDON

SKETCH SKRSH-31.DWG

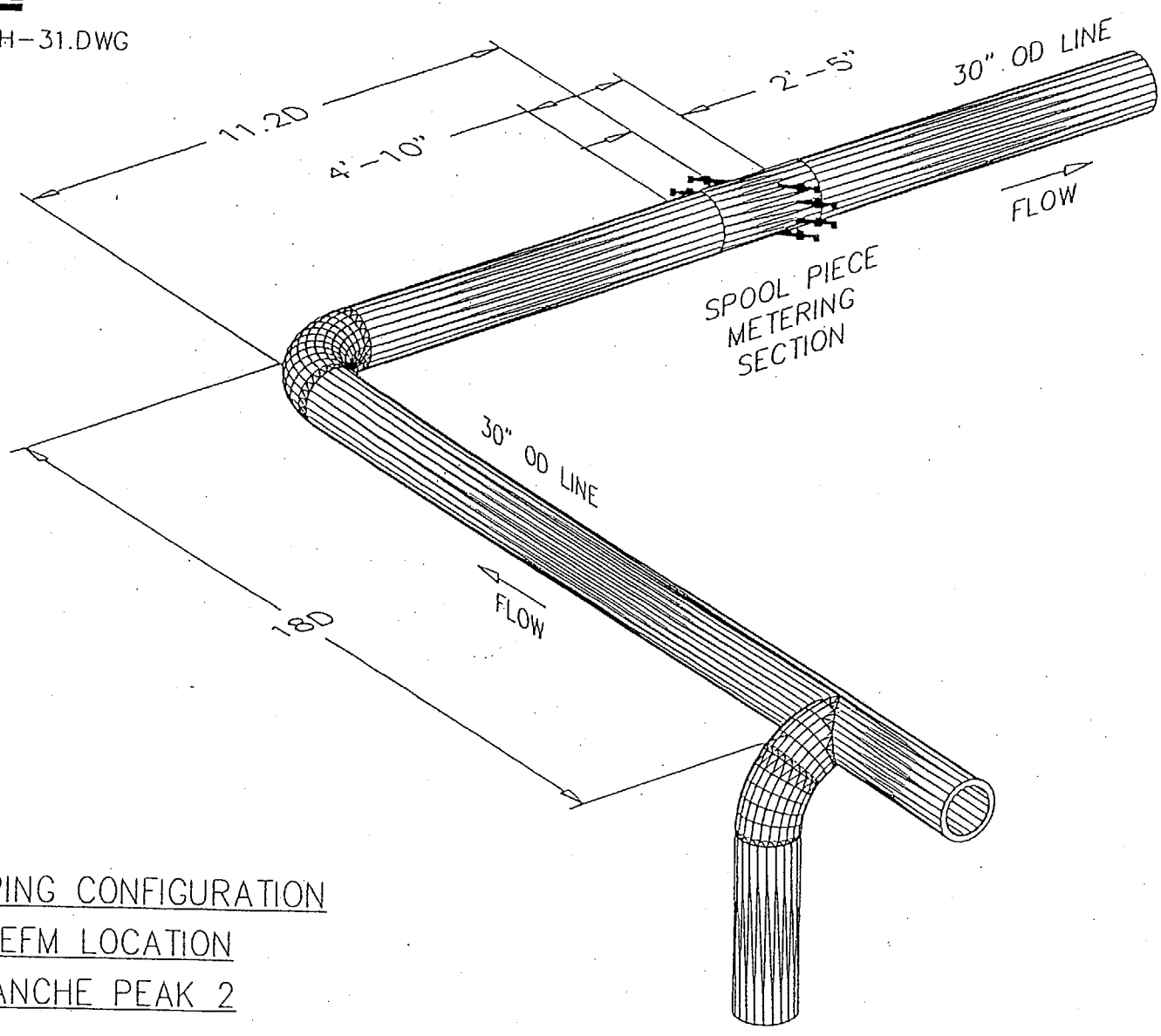

TYPICAL PIPING CONFIGURATION
AND LEFM LOCATION
COMMANCHE PEAK 2

Comanche Peak Data taken from commissioning and from plant personnel

Unit 1	11/3/99	3/31/00
-0.861136	1.0071	1.0069
-0.339981	1.0515	1.0513
0.33998	0.9858	0.9882
0.86114	0.8635	0.8565
S/L	0.918	0.914

Unit 2	10/10/99	3/31/00
-0.861136	0.9262	0.9265
-0.339981	1.0177	1.0173
0.33998	1.0237	1.0245
0.86114	0.9304	0.9283
S/L	0.909	0.908

6

Plant Name: Prairie Island Unit 2 Loop A

Feedwater Measurement System: LEFM✓

Installation Geometry: 20 Diameters Downstream from a 90° Bend

Non-planar bend 4 Diameters Upstream

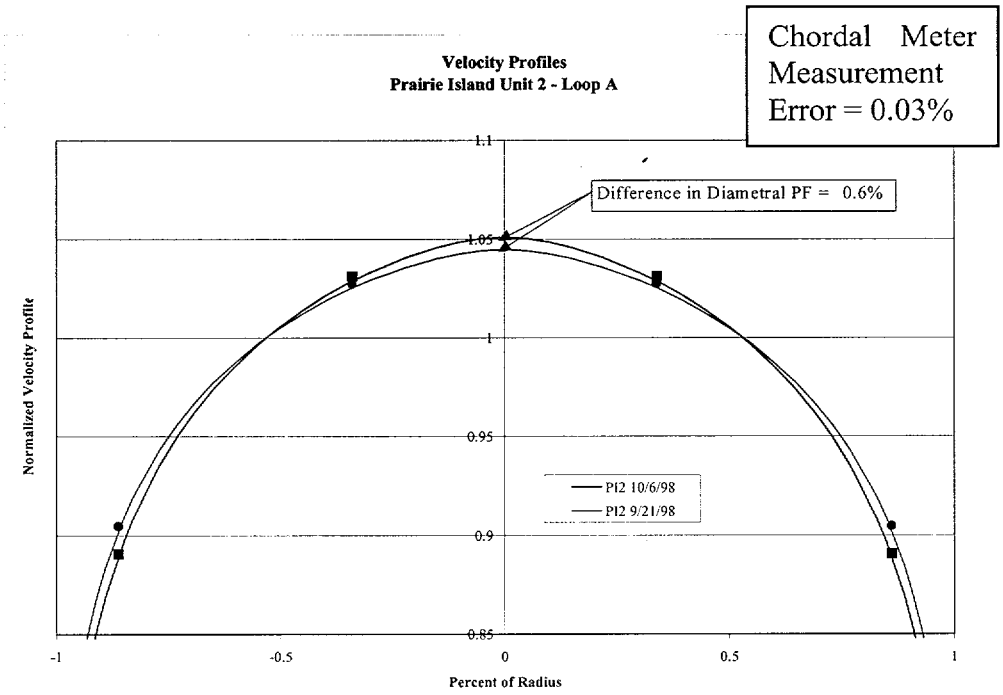

Plant Name: Prairie Island Unit 2 Loop B

Feedwater Measurement System: LEFM✓

Installation Geometry: 20 Diameters Downstream from a 90° Bend

Non-planar bend 4 Diameters Upstream

Chordal Meter Measurement Error = 0.02%

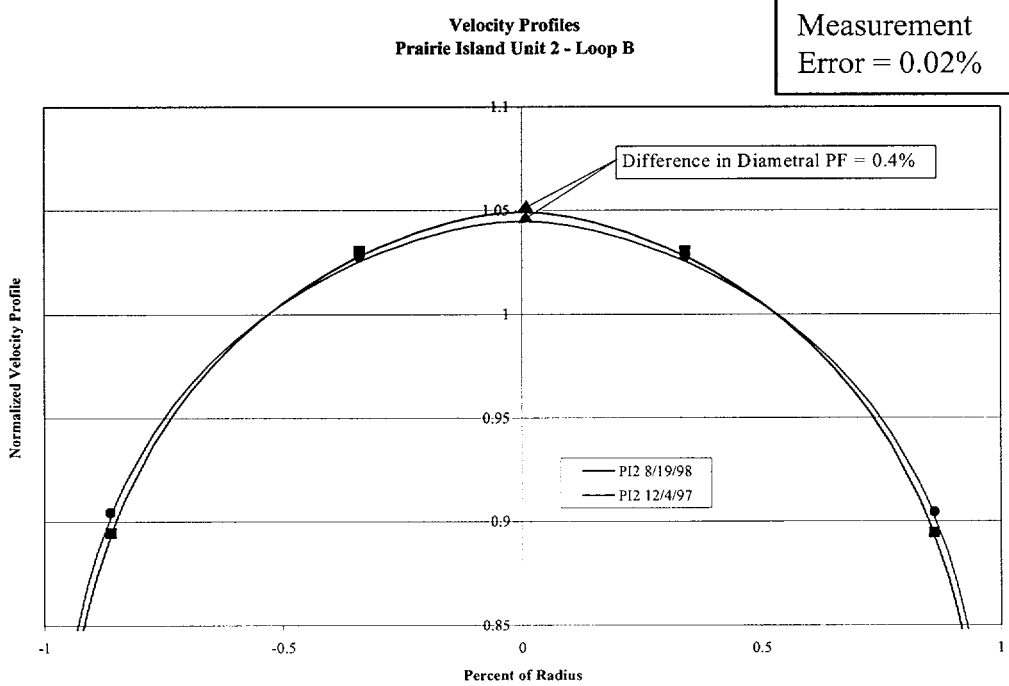

CALDON

SKETCH SKRSH-32.DWG

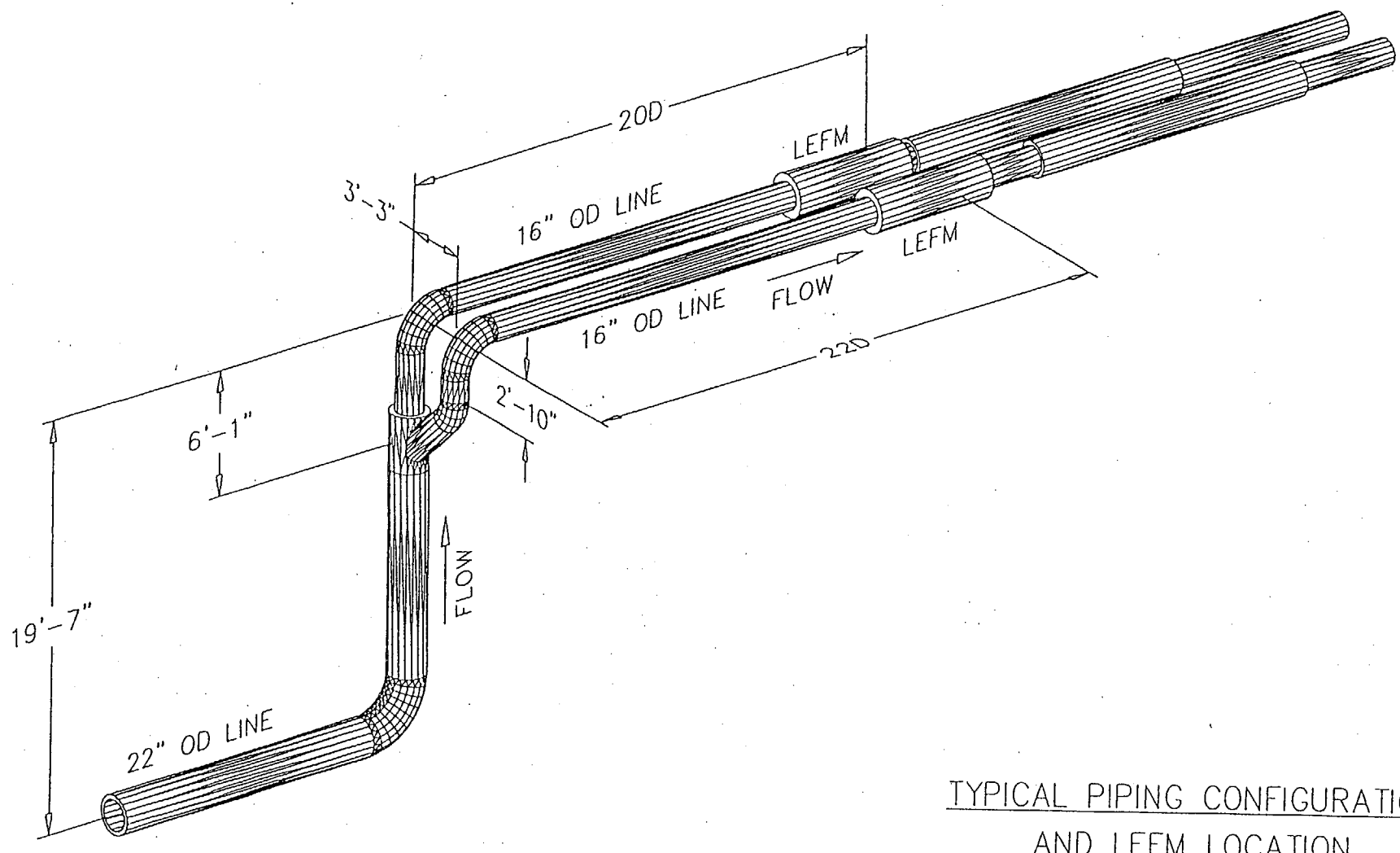

TYPICAL PIPING CONFIGURATION
AND LEFM LOCATION
PRAIRIE ISLAND

5/17/98	0.870755	1.015193	1.043678	0.925072	0.897914	1.029436	0.872
5/22/98	0.871222	1.014476	1.042591	0.930922	0.901072	1.028534	0.876
5/26/98	0.871755	1.015432	1.042008	0.929041	0.900398	1.02872	0.875
5/29/98	0.870902	1.015041	1.042119	0.930853	0.900877	1.02858	0.876
6/1/98	0.87008	1.014307	1.043693	0.928702	0.899391	1.029	0.874
6/4/98	0.872683	1.016676	1.039385	0.932975	0.902829	1.028031	0.878
6/6/98	0.869605	1.014675	1.042761	0.931202	0.900404	1.028718	0.875
6/9/98	0.872216	1.015321	1.043119	0.925113	0.898665	1.02922	0.873
6/12/98	0.870692	1.014145	1.043359	0.929805	0.900249	1.028752	0.875
6/15/98	0.871853	1.015781	1.041277	0.930322	0.901087	1.028529	0.876
6/18/98	0.8715	1.015434	1.043109	0.925388	0.898444	1.029272	0.873
6/24/98	0.873052	1.016014	1.042197	0.925216	0.899134	1.029106	0.874
6/27/98	0.871426	1.012633	1.043414	0.934219	0.902822	1.028024	0.878
6/30/98	0.870716	1.016565	1.04245	0.924561	0.897638	1.029508	0.872
7/3/98	0.869836	1.014878	1.042936	0.929472	0.899654	1.028907	0.874
7/7/98	0.870063	1.014531	1.042797	0.931189	0.900626	1.028664	0.876
7/10/98	0.872366	1.016237	1.042103	0.925272	0.898819	1.02917	0.873
7/14/98	0.8711	1.015548	1.041975	0.929519	0.90031	1.028762	0.875
7/17/98	0.871768	1.016207	1.043938	0.919757	0.895763	1.030073	0.870
7/18/98	0.87218	1.015789	1.042993	0.923961	0.89807	1.029391	0.872
7/20/98	0.870761	1.014915	1.043325	0.927327	0.899044	1.02912	0.874
7/23/98	0.870269	1.014806	1.04286	0.929668	0.899969	1.028833	0.875
7/30/98	0.870636	1.01571	1.042882	0.926208	0.898422	1.029296	0.873
8/2/98	0.871142	1.014613	1.042983	0.928955	0.900049	1.028798	0.875
8/4/98	0.87158	1.015787	1.0444	0.919716	0.895648	1.030094	0.869
8/7/98	0.871319	1.01559	1.043088	0.92525	0.898285	1.029339	0.873
8/7/98	0.871319	1.01559	1.043088	0.92525	0.898285	1.029339	0.873
8/10/98	0.871261	1.015809	1.042036	0.928128	0.899695	1.028923	0.874
8/13/98	0.871016	1.014967	1.042444	0.929883	0.90045	1.028706	0.875
8/16/98	0.87071	1.015656	1.0437	0.923476	0.897093	1.029678	0.871
8/19/98	0.871419	1.0159	1.042314	0.926708	0.899064	1.029107	0.874
8/25/98	0.871231	1.01602	1.043287	0.923017	0.897124	1.029654	0.871
8/27/98	0.872619	1.015624	1.041902	0.927836	0.900227	1.028763	0.875
8/30/98	0.872191	1.017478	1.039844	0.929028	0.90061	1.028661	0.876
9/2/98	0.87168	1.015657	1.043692	0.922428	0.897054	1.029675	0.871
9/5/98	0.870872	1.014593	1.043703	0.92696	0.898916	1.029148	0.873
9/8/98	0.870322	1.015253	1.042978	0.927705	0.899013	1.029116	0.874
9/12/98	0.869388	1.016051	1.044317	0.921317	0.895353	1.030184	0.869
9/15/98	0.870605	1.015736	1.043186	0.925086	0.897846	1.029461	0.872
9/18/98	0.86963	1.015043	1.043667	0.926674	0.898152	1.029355	0.873
9/21/98	0.879767	1.018073	1.036881	0.929628	0.904697	1.027477	0.881
9/24/98	0.872419	1.017812	1.0422	0.919366	0.895893	1.030006	0.870
9/27/98	0.869978	1.015507	1.043576	0.925059	0.897518	1.029542	0.872
9/30/98	0.870497	1.015837	1.043162	0.924942	0.897719	1.0295	0.872
10/3/98	0.87028	1.015459	1.043248	0.92613	0.898205	1.029354	0.873
10/6/98	0.870836	1.016599	1.046326	0.910981	0.890908	1.031463	0.864
10/9/98	0.870322	1.015834	1.044506	0.920366	0.895344	1.03017	0.869
10/12/98	0.871669	1.015933	1.043209	0.923216	0.897443	1.029571	0.872
10/15/98	0.872225	1.016998	1.043822	0.91683	0.894528	1.03041	0.868

10/18/98	0.873035	1.017446	1.042911	0.917664	0.89535	1.030179	0.869
10/21/98	0.870439	1.015696	1.043728	0.923475	0.896957	1.029712	0.871
10/24/98	0.870113	1.015195	1.043844	0.925127	0.89762	1.02952	0.872
10/27/98	0.870246	1.015832	1.043589	0.923603	0.896925	1.029711	0.871
10/30/98	0.87015	1.015226	1.043695	0.925691	0.897921	1.029461	0.872
11/2/98	0.870786	1.015424	1.042805	0.927208	0.898997	1.029115	0.874
11/5/98	0.871564	1.015532	1.042504	0.927166	0.899365	1.029018	0.874
11/8/98	0.871828	1.017437	1.044747	0.912569	0.892199	1.031092	0.865

Loop 31

Min	0.864
Max	0.881

10/20/97	0.911422	1.030964	1.0258	0.891634	0.901528	1.028382	0.877
10/23/97	0.911288	1.030804	1.026233	0.890882	0.901085	1.028519	0.876
10/26/97	0.910823	1.031504	1.026489	0.888056	0.899439	1.028997	0.874
10/29/97	0.91067	1.03072	1.025297	0.895056	0.902863	1.028009	0.878
11/1/97	0.911033	1.030843	1.025133	0.894803	0.902918	1.027988	0.878
11/4/97	0.910283	1.031318	1.0246	0.895811	0.903047	1.027959	0.878
11/7/97	0.911725	1.030979	1.025017	0.894061	0.902893	1.027998	0.878
11/12/97	0.911467	1.031886	1.027275	0.883359	0.897413	1.029581	0.872
11/15/97	0.909684	1.030567	1.025617	0.895483	0.902583	1.028092	0.878
11/18/97	0.90965	1.031071	1.024977	0.89582	0.902735	1.028024	0.878
11/21/97	0.911011	1.031691	1.026167	0.888367	0.899689	1.028929	0.874
11/22/97	0.911955	1.030923	1.025257	0.893318	0.902637	1.02809	0.878
11/25/97	0.910925	1.030846	1.025175	0.894706	0.902815	1.028011	0.878
12/1/97	0.911709	1.030873	1.024621	0.89573	0.90372	1.027747	0.879
12/4/97	0.911567	1.030754	1.024402	0.897075	0.904321	1.027578	0.880
12/7/97	0.912488	1.032515	1.025866	0.884905	0.898697	1.029191	0.873
12/11/97	0.910597	1.030948	1.02488	0.895936	0.903266	1.027914	0.879
12/13/97	0.9117	1.03124	1.024343	0.895503	0.903602	1.027792	0.879
12/17/97	0.910822	1.031321	1.024885	0.894197	0.90251	1.028103	0.878
12/22/97	0.910759	1.031114	1.024749	0.89547	0.903114	1.027932	0.879
12/25/97	0.910494	1.031079	1.025811	0.892239	0.901367	1.028445	0.876
12/30/97	0.912247	1.031204	1.024402	0.894903	0.903575	1.027803	0.879
1/3/98	0.910127	1.030744	1.025146	0.896021	0.903074	1.027945	0.879
1/4/98	0.910641	1.031027	1.024928	0.895336	0.902989	1.027978	0.878
1/5/98	0.912216	1.031251	1.026291	0.888186	0.900201	1.028771	0.875
1/8/98	0.909723	1.030582	1.025653	0.895203	0.902463	1.028118	0.878
1/11/98	0.911636	1.031042	1.024733	0.894914	0.903275	1.027888	0.879
1/14/98	0.912836	1.031876	1.025988	0.886628	0.899732	1.028932	0.874
3/10/98	0.91232	1.030635	1.026682	0.888901	0.90061	1.028659	0.876
3/13/98	0.911975	1.030465	1.02719	0.887959	0.899967	1.028828	0.875
3/16/98	0.913333	1.030545	1.02697	0.887136	0.900235	1.028758	0.875
3/19/98	0.912547	1.031612	1.02756	0.882411	0.897479	1.029586	0.872
3/23/98	0.913395	1.030638	1.027459	0.885189	0.899292	1.029049	0.874
3/26/98	0.912127	1.030668	1.027582	0.885984	0.899055	1.029125	0.874
3/29/98	0.912964	1.031743	1.026811	0.88395	0.898457	1.029277	0.873
4/1/98	0.912778	1.030843	1.027709	0.884239	0.898508	1.029276	0.873
4/5/98	0.91228	1.030837	1.02802	0.88365	0.897965	1.029429	0.872
4/10/98	0.911908	1.030738	1.027673	0.885594	0.898751	1.029206	0.873
4/13/98	0.912256	1.031035	1.026883	0.886837	0.899546	1.028959	0.874
4/16/98	0.912156	1.031139	1.027283	0.885285	0.89872	1.029211	0.873
4/19/98	0.911492	1.031101	1.028304	0.882511	0.897001	1.029703	0.871
4/22/98	0.91145	1.03124	1.027254	0.885683	0.898566	1.029247	0.873
4/25/98	0.910739	1.031131	1.027384	0.886211	0.898475	1.029258	0.873
4/29/98	0.911322	1.03117	1.027112	0.886475	0.898899	1.029141	0.873
5/3/98	0.911391	1.031085	1.027426	0.885647	0.898519	1.029256	0.873
5/7/98	0.910847	1.030593	1.028301	0.884961	0.897904	1.029447	0.872
5/10/98	0.91009	1.030934	1.026926	0.889184	0.899637	1.02893	0.874
5/11/98	0.910342	1.030826	1.027685	0.886653	0.898498	1.029256	0.873
5/14/98	0.910952	1.031115	1.028837	0.881017	0.895985	1.029976	0.870

5/17/98	0.910364	1.030179	1.027799	0.888651	0.899507	1.028989	0.874
5/22/98	0.910347	1.030757	1.026973	0.889342	0.899845	1.028865	0.875
5/26/98	0.91137	1.03147	1.027937	0.882531	0.89695	1.029704	0.871
5/29/98	0.910369	1.030909	1.026817	0.889384	0.899876	1.028863	0.875
6/1/98	0.909453	1.03012	1.026942	0.892609	0.901031	1.028531	0.876
6/4/98	0.909902	1.030756	1.027982	0.886519	0.898211	1.029369	0.873
6/6/98	0.90989	1.029693	1.02796	0.890151	0.90002	1.028827	0.875
6/9/98	0.910039	1.030587	1.028685	0.884417	0.897228	1.029636	0.871
6/12/98	0.910494	1.030035	1.027076	0.891387	0.900941	1.028556	0.876
6/15/98	0.910162	1.03138	1.028188	0.883086	0.896624	1.029784	0.871
6/18/98	0.909025	1.029335	1.027693	0.893209	0.901117	1.028514	0.876
6/24/98	0.909612	1.029654	1.027488	0.892298	0.900955	1.028571	0.876
6/27/98	0.907627	1.028976	1.027696	0.895759	0.901693	1.028336	0.877
6/30/98	0.91223	1.03034	1.027903	0.885675	0.898952	1.029122	0.874
7/3/98	0.910986	1.029965	1.027286	0.890401	0.900693	1.028626	0.876
7/7/98	0.909958	1.030337	1.026929	0.891442	0.9007	1.028633	0.876
7/10/98	0.910928	1.0305	1.027306	0.888453	0.89969	1.028903	0.874
7/14/98	0.909859	1.030626	1.026899	0.890714	0.900287	1.028763	0.875
7/17/98	0.911722	1.031477	1.027491	0.883862	0.897792	1.029484	0.872
7/18/98	0.910188	1.030573	1.028039	0.886537	0.898362	1.029306	0.873
7/20/98	0.910138	1.030657	1.027247	0.889126	0.899632	1.028952	0.874
7/23/98	0.909694	1.02988	1.027618	0.890872	0.900283	1.028749	0.875
7/30/98	0.910609	1.030209	1.02726	0.890093	0.900351	1.028735	0.875
8/2/98	0.910362	1.030421	1.027226	0.889794	0.900078	1.028823	0.875
8/4/98	0.908998	1.030784	1.028193	0.88642	0.897709	1.029489	0.872
8/7/98	0.908611	1.030201	1.027824	0.890059	0.899335	1.029013	0.874
8/7/98	0.908611	1.030201	1.027824	0.890059	0.899335	1.029013	0.874
8/10/98	0.908501	1.030065	1.027945	0.890342	0.899421	1.029005	0.874
8/13/98	0.910428	1.030512	1.027503	0.888361	0.899394	1.029008	0.874
8/16/98	0.908901	1.029982	1.027667	0.891162	0.900031	1.028825	0.875
8/19/98	0.91012	1.032095	1.028763	0.878812	0.894466	1.030429	0.868
8/25/98	0.910642	1.029834	1.026611	0.893428	0.902035	1.028223	0.877
8/27/98	0.909814	1.029745	1.027177	0.89287	0.901342	1.028461	0.876
8/30/98	0.911269	1.029857	1.027198	0.890812	0.90104	1.028528	0.876
9/2/98	0.909108	1.029626	1.0272	0.893678	0.901393	1.028413	0.876
9/5/98	0.910936	1.030629	1.028486	0.884064	0.8975	1.029558	0.872
9/8/98	0.910035	1.030021	1.027304	0.89099	0.900513	1.028663	0.875
9/12/98	0.909498	1.030026	1.027056	0.892428	0.900963	1.028541	0.876
9/15/98	0.910383	1.031121	1.026021	0.891484	0.900933	1.028571	0.876
9/18/98	0.910642	1.032304	1.027159	0.882942	0.896792	1.029732	0.871
9/21/98	0.907328	1.030548	1.02774	0.890578	0.898953	1.029144	0.873
9/24/98	0.910292	1.030834	1.026976	0.889101	0.899696	1.028905	0.874
9/27/98	0.909814	1.03012	1.026514	0.893595	0.901705	1.028317	0.877
9/30/98	0.909489	1.030057	1.026447	0.894559	0.902024	1.028252	0.877
10/3/98	0.909553	1.030168	1.026399	0.894256	0.901904	1.028284	0.877
10/6/98	0.910625	1.030907	1.027518	0.886734	0.898679	1.029213	0.873
10/9/98	0.909117	1.030115	1.027228	0.892079	0.900598	1.028672	0.875
10/12/98	0.909706	1.030192	1.026512	0.89352	0.901613	1.028352	0.877
10/15/98	0.909517	1.030408	1.026452	0.893342	0.90143	1.02843	0.877

10/18/98	0.909917	1.030926	1.027442	0.887539	0.898728	1.029184	0.873
10/21/98	0.910431	1.030917	1.026481	0.890514	0.900472	1.028699	0.875
10/24/98	0.909686	1.030992	1.026521	0.8909	0.900293	1.028757	0.875
10/27/98	0.909844	1.031127	1.026245	0.891103	0.900474	1.028686	0.875
10/30/98	0.909936	1.030813	1.02803	0.885908	0.897922	1.029422	0.872
11/2/98	0.91047	1.030654	1.026923	0.889753	0.900111	1.028789	0.875
11/5/98	0.909503	1.030226	1.027067	0.891864	0.900684	1.028647	0.876
11/8/98	0.908368	1.029756	1.027234	0.89397	0.901169	1.028495	0.876

Loop 32

Min	0.868
Max	0.880

Prairie Island 2 Data from remote monitoring program - found under LEFMLOGS

Loop A

				S	L	S/L
9/21/98	0.8798	1.0181	1.0369	0.9296	0.9047	1.0275	0.881
10/6/98	0.8708	1.0166	1.0463	0.9110	0.8909	1.0315	0.864

Loop B

				S	L	S/L
12/4/97	0.9116	1.0308	1.0244	0.8971	0.9043	1.0276	0.880
8/19/98	0.9101	1.0321	1.0288	0.8788	0.8945	1.0304	0.868

7

Plant Name: Beaver Valley Unit 1

Feedwater Measurement System: LEFM✓

Installation Geometry: 10 Diameters Downstream from a Header

Non-planar bend 4 Diameters Upstream

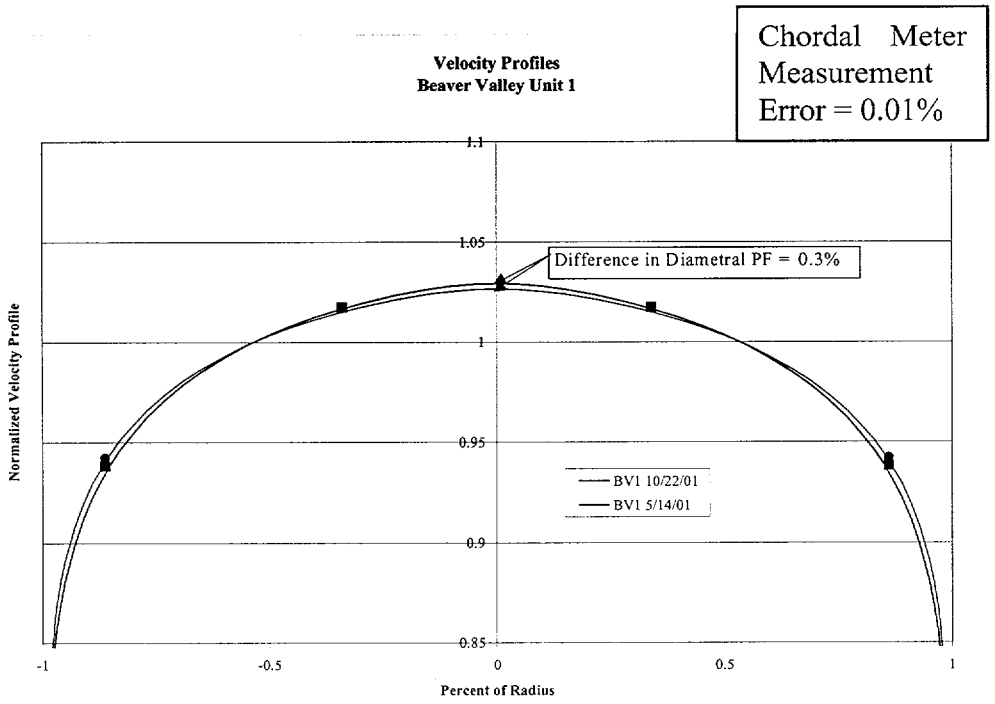

TYPICAL PIPING CONFIGURATION
AND LEFM LOCATION
BEAVER VALLEY UNIT 1

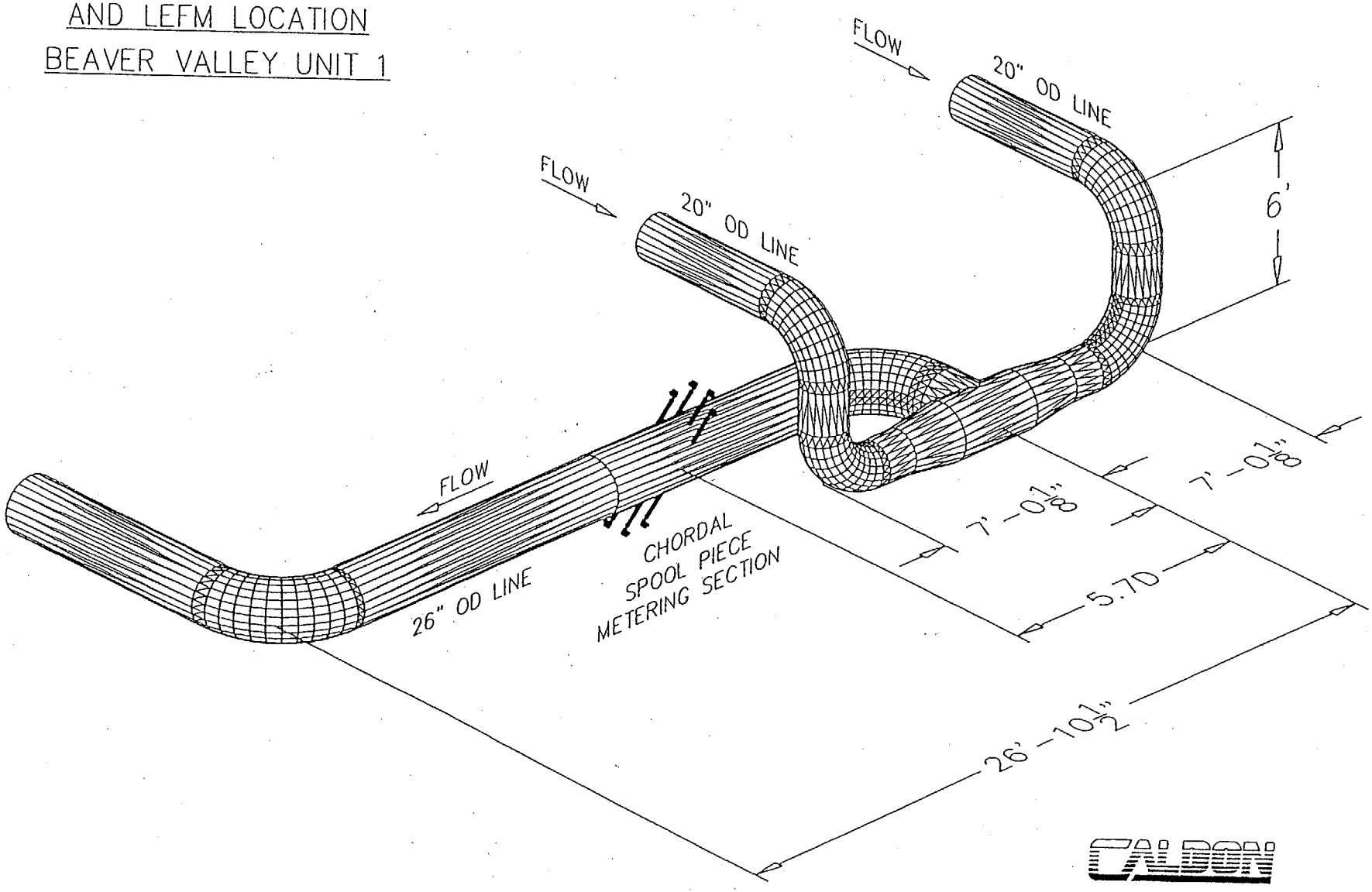

CALDON

SKETCH SKRSH-02A.DWG

Beaver Valley 1 09:49:40 2001/10/22

Configuration Files

ALARM.INI	2001/10/12	19:31:40	FFFF909D
FAT.INI	2001/03/22	15:07:12	FFFFF185
HYDRAULI.INI	2001/05/08	06:40:22	FFFF820A
METER.INI	2001/07/13	17:35:22	FFFF0EFF
PARAMETR.INI	2001/05/08	17:26:30	FFFC946F
P_CONFIG.INI	2001/04/17	13:30:02	FFFF6881
PROPERTY.INI	2001/03/22	15:20:40	FFFFF97A
SETUP.INI	2001/05/08	06:19:42	FFFFAA6B

Setup Files

Setapu1.txt	2001/04/17	16:21:00	FFFE0F61
Setapu2.txt	2001/02/21	13:44:14	FFF89974

Beaver Valley 1 Current Flow:	62.30
Beaver Valley 1 Average Flow:	62.36
Beaver Valley 1 Maximum Flow:	62.52
Beaver Valley 1 Minimum Flow:	62.16
Beaver Valley 1 Deviation Flow:	0.07
Beaver Valley 1 Current Temp:	434.0
Beaver Valley 1 Average Temp:	434.0
Beaver Valley 1 Maximum Temp:	434.0
Beaver Valley 1 Minimum Temp:	433.9
Beaver Valley 1 Deviation Temp:	0.0
Beaver Valley 1 Current System Status:	NORMAL
Beaver Valley 1 Minimum System Status:	NORMAL
Beaver Valley 1 Current Mass Flow:	11.771
Beaver Valley 1 Average Mass Flow:	11.782
Beaver Valley 1 Maximum Mass Flow:	11.814
Beaver Valley 1 Minimum Mass Flow:	11.744
Beaver Valley 1 Deviation Mass Flow:	0.013
Beaver Valley 1 Uncertainty:	0.12

Meter 1 Current Flow:	62.30
Meter 1 Average Flow:	62.36
Meter 1 Maximum Flow:	62.52
Meter 1 Minimum Flow:	62.16
Meter 1 Deviation Flow:	0.07
Meter 1 Current Temp:	434.0
Meter 1 Average Temp:	434.0
Meter 1 Maximum Temp:	434.0
Meter 1 Minimum Temp:	433.9
Meter 1 Deviation Temp:	0.0
Meter 1 Current Press:	1090.60
Meter 1 Average Press:	1091.02
Meter 1 Maximum Press:	1093.03
Meter 1 Minimum Press:	1089.55
Meter 1 Deviation Press:	0.02

Meter 1 Current Meter Status:	NORMAL
Meter 1 Minimum Meter Status:	NORMAL
Meter 1 Current Mass Flow:	11.771
Meter 1 Average Mass Flow:	11.782
Meter 1 Maximum Mass Flow:	11.814
Meter 1 Minimum Mass Flow:	11.744
Meter 1 Deviation Mass Flow:	0.013
Meter 1 Uncertainty:	0.12

	Path 1	Path 2	Path 3	Path 4
Meter 1 Current Variance:	122656.34	86921.20	101972.74	77350.00
Meter 1 Average Vnorm:	1.0594	1.0682	0.9673	0.8175
Meter 1 Current Vnorm:	1.0569	1.0638	0.9704	0.8246
Meter 1 Maximum Vnorm:	1.1004	1.0852	0.9852	0.8428
Meter 1 Minimum Vnorm:	1.0179	1.0547	0.9483	0.7852
Meter 1 Deviation Vnorm:	0.015	0.005	0.006	0.011
Meter 1 Benchmark Vnorm:	1.0585	1.0679	0.9678	0.8179
Meter 1 Limit % Vnorm:	3.00	3.00	3.00	3.00
Meter 1 Average Gain:	63.08	62.65	64.56	66.38
Meter 1 Current Gain:	63.07	62.59	64.68	66.56
Meter 1 Maximum Gain:	63.42	63.09	64.73	66.76
Meter 1 Minimum Gain:	62.68	62.33	64.38	65.99
Meter 1 Deviation Gain:	0.12	0.12	0.06	0.13
Meter 1 Limit Gain:	75.00	75.00	75.00	75.00
Meter 1 Current Gain Up:	60.99	62.41	63.97	65.07
Meter 1 Current Gain Down:	65.07	62.88	65.23	68.05
Meter 1 Current TPGain Up:	63.97	64.13	64.13	64.13
Meter 1 Current TPGain Down:	64.13	64.29	63.97	64.29
Meter 1 Average S/N Ratio:	48.94	50.00	34.90	30.33
Meter 1 Current S/N Ratio:	49.13	50.02	34.75	29.80
Meter 1 Maximum S/N Ratio:	49.85	50.82	35.37	30.85
Meter 1 Minimum S/N Ratio:	48.25	49.06	34.52	29.66
Meter 1 Deviation S/N Ratio:	0.29	0.33	0.14	0.25
Meter 1 Average TDown:	417993	661915	662417	419235
Meter 1 Current TDown:	418011	661957	662429	419240
Meter 1 Maximum TDown:	418066	661993	662487	419294
Meter 1 Minimum TDown:	417930	661823	662339	419177
Meter 1 Deviation TDown:	22	26	26	18
Meter 1 Current TPTDown:	4000452	4000454	4000452	4000449
Meter 1 Average DeltaT:	2542.9	4760.7	4311.6	1962.6
Meter 1 Current DeltaT:	2534.9	4737.2	4321.8	1978.1
Meter 1 Maximum DeltaT:	2643.3	4839.5	4384.9	2019.7
Meter 1 Minimum DeltaT:	2444.8	4691.2	4230.4	1883.9
Meter 1 Deviation DeltaT:	36.3	24.3	27.8	27.0
Meter 1 Current TPDeltaT:	2.0	-2.9	1.7	4.4
Meter 1 Current Path Status:	NORMAL	NORMAL	NORMAL	NORMAL
Meter 1 Minimum Path Status:	NORMAL	NORMAL	NORMAL	NORMAL
Meter 1 Average Reject %:	0.9	0.3	0.3	0.6

Meter 1 Current Reject %:	1.2	0.0	0.1	0.4
Meter 1 Maximum Reject %:	2.2	1.2	1.2	1.8
Meter 1 Minimum Reject %:	0.0	0.0	0.0	0.0
Meter 1 Deviation Reject %:	0.5	0.2	0.2	0.4
Meter 1 Incoming Samples:	719	719	719	719
Meter 1 Number Failed Rejects:	0	0	0	0

Alarm Log Events

```
REM Sound Velocity Ratio to Nominal
DEFAULTCFRATIO1:,0.9998,1.0002,1.0004,1.0000

REM Nominal Sound Velocity for the Speed of Sound Tests
SOUNDVELOCITYNOM1:,50300

REM Averaging period for the Velocity Profile Benchmark Calculation
*
MAXN:,720

REM Velocity Profiles used to evaluate the profile test
DEFAULTVELOCITY1:,1.1080,1.0894,0.9448,0.7765

REM Profile Factor Coefficients
PROFILEFACTORCOEFA01:,1.0039E+000
```

Plant Name: Beaver Valley Unit 2

Feedwater Measurement System: LEFM✓

Installation Geometry: 6 Diameters Downstream from a Header

Two Non-planar Feeds Upstream

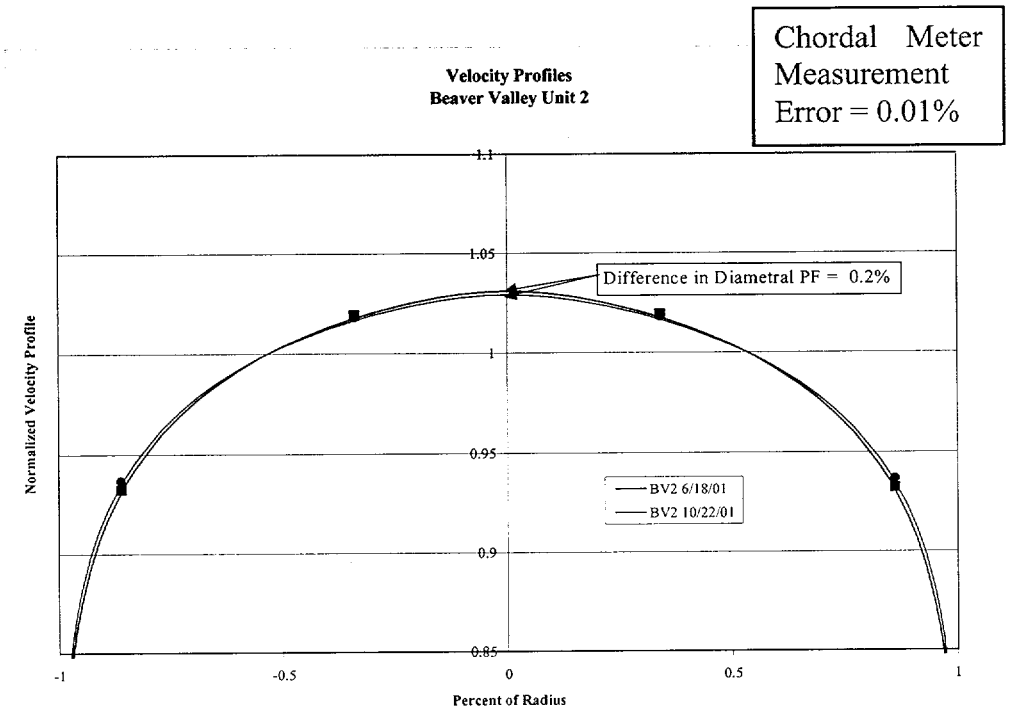

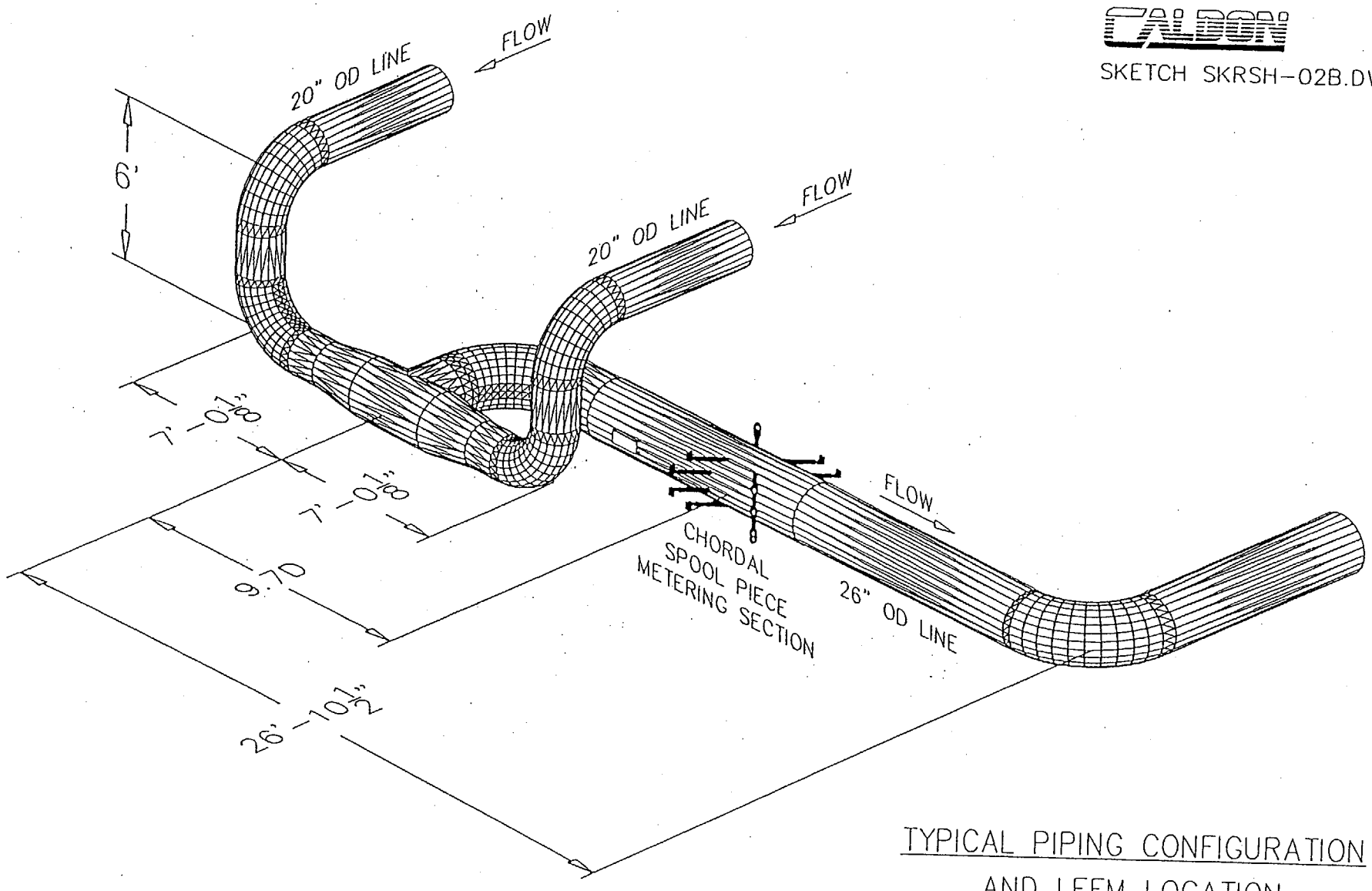

TYPICAL PIPING CONFIGURATION
AND LEFM LOCATION
BEAVER VALLEY UNIT 2

Beaver Valley Unit 2 09:37:29 2001/10/22

Configuration Files

ALARM.INI	2001/06/18	09:52:56	FFFF04DE
FAT.INI	2001/03/23	15:40:46	FFFFAA26
HYDRAULI.INI	2001/06/18	12:13:02	FFFF49AE
METER.INI	2001/07/13	17:35:50	FFFC458F
PARAMETR.INI	2001/06/18	12:15:56	FFFC7630
P_CONFIG.INI	2001/05/02	10:02:04	FFFD81CB
PROPERTY.INI	2001/03/23	15:55:34	FFFFD6AC
SETUP.INI	2001/07/05	15:21:36	FFFE7200

Setup Files

Setapu1.txt	2001/06/18	15:00:40	FFFDFB04
Setapu2.txt	2001/05/08	13:56:36	FFFE1903
Setapu3.txt	2001/03/23	15:25:32	FFFE1904
Setapu4.txt	2001/03/23	15:25:32	FFFE1904
Setapu5.txt	2001/06/18	15:01:34	FFFDFAE5
Setapu6.txt	2001/03/23	15:25:32	FFFE1904
Setapu7.txt	2001/03/23	15:25:32	FFFE1904
Setapu8.txt	2001/03/23	15:25:32	FFFE1904

Beaver Valley Unit 2 Current Flow:	61.31
Beaver Valley Unit 2 Average Flow:	61.33
Beaver Valley Unit 2 Maximum Flow:	61.40
Beaver Valley Unit 2 Minimum Flow:	61.23
Beaver Valley Unit 2 Deviation Flow:	0.03
Beaver Valley Unit 2 Current Temp:	432.9
Beaver Valley Unit 2 Average Temp:	432.9
Beaver Valley Unit 2 Maximum Temp:	432.9
Beaver Valley Unit 2 Minimum Temp:	432.9
Beaver Valley Unit 2 Deviation Temp:	0.0
Beaver Valley Unit 2 Current System Status:	NORMAL
Beaver Valley Unit 2 Minimum System Status:	NORMAL
Beaver Valley Unit 2 Current Mass Flow:	11.593
Beaver Valley Unit 2 Average Mass Flow:	11.597
Beaver Valley Unit 2 Maximum Mass Flow:	11.610
Beaver Valley Unit 2 Minimum Mass Flow:	11.578
Beaver Valley Unit 2 Deviation Mass Flow:	0.006
Beaver Valley Unit 2 Uncertainty:	0.10

Meter 1 Current Flow:	61.31
Meter 1 Average Flow:	61.33
Meter 1 Maximum Flow:	61.40
Meter 1 Minimum Flow:	61.23
Meter 1 Deviation Flow:	0.03
Meter 1 Current Temp:	432.9
Meter 1 Average Temp:	432.9
Meter 1 Maximum Temp:	432.9
Meter 1 Minimum Temp:	432.9
Meter 1 Deviation Temp:	0.0

Meter 1 Current Press:	1087.95
Meter 1 Average Press:	1087.57
Meter 1 Maximum Press:	1088.36
Meter 1 Minimum Press:	1086.85
Meter 1 Deviation Press:	0.01
Meter 1 Current Meter Status:	NORMAL
Meter 1 Minimum Meter Status:	NORMAL
Meter 1 Current Mass Flow:	11.593
Meter 1 Average Mass Flow:	11.597
Meter 1 Maximum Mass Flow:	11.610
Meter 1 Minimum Mass Flow:	11.578
Meter 1 Deviation Mass Flow:	0.006
Meter 1 Uncertainty:	0.10

	Path 1	Path 2	Path 3	Path 4	Path 5	Path 6	Path 7	Path 8
Meter 1 Current Variance:	109352.58	119133.39	125851.56	102142.39	112477.57	135183.91	125798.45	128769.61
Meter 1 Average Vnorm:	0.7408	0.9327	1.0980	1.1240	1.1506	1.1063	0.9360	0.7313
Meter 1 Current Vnorm:	0.7395	0.9335	1.0987	1.1161	1.1490	1.1014	0.9410	0.7369
Meter 1 Maximum Vnorm:	0.7828	0.9511	1.1167	1.1549	1.1839	1.1236	0.9588	0.7808
Meter 1 Minimum Vnorm:	0.7124	0.9191	1.0813	1.0757	1.0892	1.0869	0.9177	0.6994
Meter 1 Deviation Vnorm:	0.012	0.006	0.006	0.014	0.014	0.007	0.007	0.014
Meter 1 Benchmark Vnorm:	0.7404	0.9322	1.0983	1.1246	1.1522	1.1068	0.9353	0.7307
Meter 1 Limit % Vnorm:	0.50	0.50	0.50	0.50	0.50	0.50	0.50	0.50
Meter 1 Average Gain:	69.89	63.03	61.14	66.59	60.13	59.16	69.79	56.50
Meter 1 Current Gain:	69.95	63.10	61.11	66.56	60.25	59.22	69.73	56.52
Meter 1 Maximum Gain:	70.12	63.20	61.25	66.80	60.30	59.31	69.96	56.64
Meter 1 Minimum Gain:	69.75	62.89	60.99	66.39	59.93	58.99	69.67	56.38
Meter 1 Deviation Gain:	0.06	0.05	0.06	0.07	0.07	0.06	0.06	0.05
Meter 1 Limit Gain:	76.00	76.00	76.00	76.00	76.00	76.00	76.00	76.00
Meter 1 Current Gain Up:	69.62	63.03	61.46	65.86	60.37	59.42	69.78	55.66
Meter 1 Current Gain Down:	70.09	63.03	60.68	67.11	60.05	58.95	69.62	57.23
Meter 1 Current TPGain Up:	64.60	64.76	64.76	64.60	64.60	64.60	64.76	64.44
Meter 1 Current TPGain Down:	64.44	64.44	64.44	64.60	64.76	64.44	64.60	64.92

Meter 1 Average S/N Ratio:	25.63	55.07	57.63	31.86	75.85	82.27	22.36	92.80
Meter 1 Current S/N Ratio:	25.66	55.15	58.06	31.97	75.77	82.67	22.38	92.72
Meter 1 Maximum S/N Ratio:	25.86	55.53	58.26	32.25	77.14	83.15	22.54	93.74
Meter 1 Minimum S/N Ratio:	25.44	54.69	57.13	31.56	74.80	81.50	22.17	91.74
Meter 1 Deviation S/N Ratio:	0.07	0.15	0.23	0.13	0.35	0.33	0.06	0.31
Meter 1 Average TDown:	378926	635665	634623	378186	383409	634129	634513	378401
Meter 1 Current TDown:	378930	635663	634624	378194	383410	634138	634499	378394
Meter 1 Maximum TDown:	378970	635710	634670	378237	383479	634184	634563	378450
Meter 1 Minimum TDown:	378874	635618	634573	378147	383366	634081	634459	378343
Meter 1 Deviation TDown:	17	19	17	16	18	19	19	18
Meter 1 Current TPTDown:	4500402	4500402	4500402	4500402	4500508	4500507	4500508	4500507
Meter 1 Average DeltaT:	1733.5	4044.1	4761.3	2634.8	2689.9	4790.6	4052.9	1713.3
Meter 1 Current DeltaT:	1729.9	4046.1	4762.8	2615.4	2685.5	4767.7	4073.1	1725.8
Meter 1 Maximum DeltaT:	1832.5	4125.9	4840.1	2709.1	2768.7	4867.7	4153.0	1829.6
Meter 1 Minimum DeltaT:	1666.1	3986.5	4690.9	2522.6	2547.1	4707.4	3975.7	1638.9
Meter 1 Deviation DeltaT:	28.2	27.1	26.6	32.8	32.7	32.2	29.2	33.2
Meter 1 Current TPDeltaT:	0.1	0.7	-0.0	-0.1	2.2	-0.2	0.2	4.5
Meter 1 Current Path Status:	NORMAL	NORMAL	NORMAL	NORMAL	NORMAL	NORMAL	NORMAL	NORMAL
Meter 1 Minimum Path Status:	NORMAL	NORMAL	NORMAL	NORMAL	NORMAL	NORMAL	NORMAL	NORMAL
Meter 1 Average Reject %:	0.1	0.1	0.1	0.2	0.1	0.1	0.2	0.1
Meter 1 Current Reject %:	0.0	0.0	0.0	0.0	0.2	0.0	0.0	0.0
Meter 1 Maximum Reject %:	1.2	0.7	0.8	1.0	1.2	0.8	0.8	1.1
Meter 1 Minimum Reject %:	0.0	0.0	0.0	0.0	0.0	0.0	0.0	0.0
Meter 1 Deviation Reject %:	0.2	0.1	0.2	0.2	0.2	0.1	0.2	0.2
Meter 1 Incoming Samples:	719	719	719	719	719	719	719	719
Meter 1 Number Failed Rejects:	0	0	0	0	0	0	0	0

6/18/07

Meter 1 Deviation Flow:	0.03
Meter 1 Current Temp:	434.2
Meter 1 Average Temp:	434.2
Meter 1 Maximum Temp:	434.3
Meter 1 Minimum Temp:	434.2
Meter 1 Deviation Temp:	0.0
Meter 1 Current Press:	1075.01
Meter 1 Average Press:	1074.61
Meter 1 Maximum Press:	1075.73
Meter 1 Minimum Press:	1073.57
Meter 1 Deviation Press:	0.01
Meter 1 Current Meter Status:	NORMAL
Meter 1 Minimum Meter Status:	NORMAL
Meter 1 Current Mass Flow:	11.760
Meter 1 Average Mass Flow:	11.779
Meter 1 Maximum Mass Flow:	11.794
Meter 1 Minimum Mass Flow:	11.760
Meter 1 Deviation Mass Flow:	0.005
Meter 1 Uncertainty:	0.10

	Path 1	Path 2	Path 3	Path 4	Path 5	Path 6	Path 7	Path 8
Meter 1 Current Variance:	101724.19	128352.17	119280.98	120135.55	127986.56	159406.06	142563.78	137988.53
Meter 1 Average Vnorm:	0.7338	0.9276	1.1020	1.1252	1.1518	1.1157	0.9326	0.7188
Meter 1 Current Vnorm:	0.7440	0.9336	1.0970	1.1115	1.1473	1.1037	0.9414	0.7349
Meter 1 Maximum Vnorm:	0.7734	0.9514	1.1208	1.1620	1.1909	1.1363	0.9505	0.7563
Meter 1 Minimum Vnorm:	0.6977	0.9080	1.0792	1.0767	1.1162	1.0987	0.9136	0.6771
Meter 1 Deviation Vnorm:	0.012	0.007	0.007	0.015	0.014	0.007	0.007	0.015
Meter 1 Benchmark Vnorm:	0.7348	0.9282	1.1014	1.1244	1.1507	1.1154	0.9330	0.7200
Meter 1 Limit % Vnorm:	0.50	0.50	0.50	0.50	0.50	0.50	0.50	0.50
Meter 1 Average Gain:	66.98	64.51	62.39	64.05	62.38	60.25	67.51	57.07
Meter 1 Current Gain:	67.02	64.41	62.47	64.03	62.48	60.24	67.52	57.01
Meter 1 Maximum Gain:	67.14	64.68	62.52	64.22	62.63	60.39	67.70	57.22
Meter 1 Minimum Gain:	66.81	64.38	62.24	63.83	62.14	60.01	67.31	56.93
Meter 1 Deviation Gain:	0.06	0.05	0.05	0.06	0.08	0.07	0.06	0.05
Meter 1 Limit Gain:	76.00	76.00	76.00	76.00	76.00	76.00	76.00	76.00
Meter 1 Current Gain Up:	66.48	63.97	62.72	62.88	63.50	60.21	67.90	56.13
Meter 1 Current Gain Down:	67.42	64.60	62.09	65.07	61.31	60.05	66.95	57.86
Meter 1 Current TPGain Up:	64.60	64.76	64.76	64.76	64.44	64.44	64.60	64.44
Meter 1 Current TPGain Down:	64.60	64.60	64.60	64.60	64.60	64.44	64.60	64.76
Meter 1 Average S/N Ratio:	37.21	48.21	50.49	41.69	54.93	74.50	28.73	85.88
Meter 1 Current S/N Ratio:	37.33	48.04	50.44	41.75	54.91	75.05	28.81	84.86

Beaver Valley

Data taken from commissioning and from plant personnel during the velocity profile alarm

Unit 1

	5/14/01	10/22/01
-0.861136	1.1080	1.0594
-0.339981	1.0894	1.0682
0.33998	0.9448	0.9673
0.86114	0.7765	0.8175
S/L	0.926	0.922

Unit 2

	6/18/01	10/22/01
-0.861136	0.7263	0.7361
-0.339981	0.9301	0.9344
0.33998	1.1089	1.1022
0.86114	1.1385	1.1373
S/L	0.915	0.920

	6/18/01	10/22/01
Path 1	0.7338	0.7408
Path 2	0.9276	0.9327
Path 3	1.1020	1.0980
Path 4	1.1252	1.1240
Path 5	1.1518	1.1506
Path 6	1.1157	1.1063
Path 7	0.9326	0.9360
Path 8	0.7188	0.7313