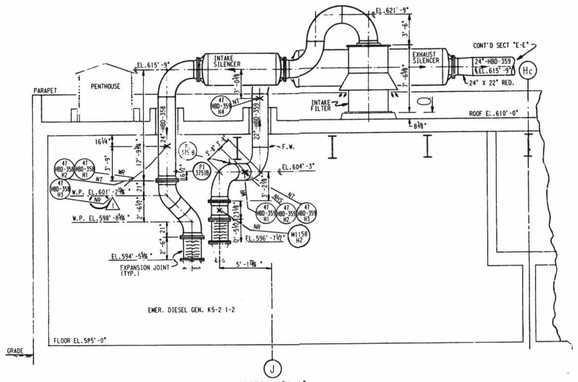

SECTION "A-A"

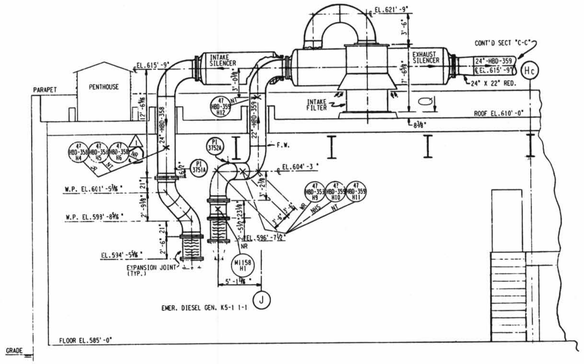

SECTION "B-B"

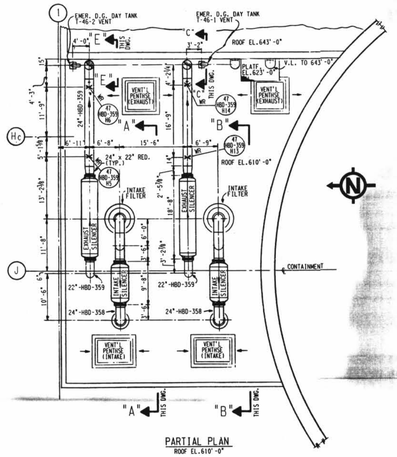

PARTIAL PLAN
ROOF EL.610'-0"

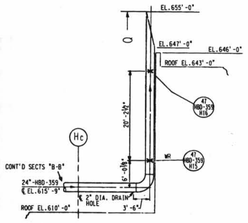

SECTION "C-C"
THIS DWG.

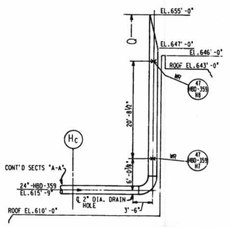

SECTION "E-E"
THIS DWG.

LEGEND

A	ANCHOR
CS	CONSTANT SPRING HANGER
VS	VARIABLE SPRING HANGER
HS	HYDRAULIC SNUBBER
MS	MECHANICAL SNUBBER
N	NON-WELDED SUPPORT ATTACHMENT
W	WELDED INTEGRAL SUPPORT ATTACHMENT
R	RIGID SUPPORT
T	SWAY STRUT

NOTES:

1. MULTIPLE SWAY STRUTS, SPRING SUPPORTS OR SNUBBERS IN A SINGLE PIPING SUPPORT ARE SHOWN BY A NUMBER BEFORE THE SUPPORT TYPE. (EXAMPLE: 2MHS - TWO HYDRAULIC TYPE SNUBBERS THAT ARE NOT WELDED INTEGRAL TO THE PIPE).
2. ALL PIPING AND SUPPORTS ON THIS DRAWING ARE ASME, SECTION XI, CLASS 3.

GENERAL NOTE

DIMENSIONS SHOWN ON THIS DRAWING ARE TO BE USED FOR APPROXIMATE LOCATION ONLY. USE DESIGN DRAWINGS FOR DIMENSIONAL VERIFICATION.

REFERENCE DRAWINGS:

ISID2-017B "DIESEL GENERATORS AIR START"

D-149

NO.	DATE	REVISIONS	BY	CK'D	ENGR.	DSGN. SUPV.	QCN. SUPV.
1	6/6/94	INC. DCN'S ISIM2-268D-1 AND 2 PER MOD 95-0029 SUP. 0	SBW	DVK			
0	10/21/94	ISSUED FOR USE	INITIALS ON FILE				

SCALE NONE | DESIGNED C.DAFT | DRAWN D.KUNTZ | DATE 10-21-93

DAVIS-BESSE NUCLEAR POWER STATION
UNIT NO. 1
THE TOLEDO EDISON COMPANY

INSERVICE INSPECTION ISOMETRIC
EMERGENCY DIESEL GENERATOR
AIR INTAKE & EXHAUST

DRAWING NO. ISIM2-268D | REV. 1

DB 07-18-96

DFN:/DBNPS2/ISIM/2IM268D .DGN/TG4