NMC
Committed to Nuclear Excellence

Monticello Nuclear Generating Plant
Operated by Nuclear Management Company, LLC

M2001152

November 28, 2001

10 CFR Part 50
Section 50.55a(g)

US Nuclear Regulatory Commission
Attn: Document Control Desk
Washington, DC 20555

MONTICELLO NUCLEAR GENERATING PLANT
Docket No. 50-263 License No. DPR-22

Revision No. 4 to the Monticello Inservice Inspection Plan

Pursuant to the American Society of Mechanical Engineers (ASME) Boiler and Pressure Vessel Code, Section XI, IWA-1400(c), attached for your filing is the most recent revision of our document titled, "Inservice Inspection Examination Plan, Revision 4, Third Interval, June 1, 1992 through May 31, 2002". The Inservice Inspection (ISI) Plan is based on Section XI of the 1986 edition of the ASME Code with approved Requests for Relief. This revision will govern the conduct of the ISI program over the remainder of the Third Ten Year Interval of operation of the Monticello Nuclear Generating Plant from June 1, 1992 through May 31, 2002.

A Summary of Revisions is included in the attached Plan on page iii. The major changes to the Plan include the incorporation of additional Appendix VIII Requirements, the correction and updating of references and the inclusion of approved Relief Request. Additionally, this revision adds and clarifies several Code Cases, adds required pressure tests, updates scheduled items to completed status and adds additional schedule examinations for ASME Category C-F-1 Examinations.

The ISI Plan has been provided in its entirety. All pages of the previous version of the ISI Plan that you have on file may be discarded.

This letter contains no new NRC commitments, nor does it modify any prior commitments.

A047

2807 West County Road 75 • Monticello, Minnesota 55362-9637
Telephone: 763.295.5151 • Fax: 763.295.1454

If you have any question related to our revised Inservice Inspection Plan or the Requests for Relief included in the plan please contact Doug Neve, Licensing Project Manager (Interim), at (763) 295-1353.

Jeffrey S. Forbes
Vice President
Monticello Nuclear Generating Plant

Attachment: Inservice Inspection Examination Plan, Revision 4, Third Interval, June 1, 1992 through May 31, 2002

cc: Regional Administrator - III, NRC
NRR Project Manager, NRC
Sr. Resident Inspector, NRC
State of Minnesota Boiler Inspector
Hartford Insurance
J Silberg (w/o attachments)

Northern States Power Company
Monticello Nuclear Generating Plant
Document Control Distribution System

Document Distribution Manifest
Controlled Documents - Current

Name: US NRC
Title: ATTN: DOCUMENT CONTROL DESK
Company: MONTI LICENSING
Location: ATTN: MARC VOTH
MNGP-SAB/2ND FLOOR
11 COPIES OF USAR

Manifest Number: 2001-830
Distribution Type: I
Holder Number: 195
ID Number: YYYY09

Date Mailed: _____

Distribution Type: INSERVICE INSPECTION

Document Type	Document Number	Revision	Title
NOTE: The documents listed below are new or revised			
1991	ISI	4	INSERVICE INSPECTION EXAMINATION PLAN

Summary of Revisions-Rev 4

Page 1.2-1	Added Appendix VIII Supplemental Examination Requirements
Page 1.2-2	Corrected Relief Request No. 7 Rev 1. Added Appendix VIII Supplemental Training Requirements for NDE technicians. Added Code Case 491 for hanger inspections-clarification.
Page 1.3-1	added 10CFR50.55a (66FR16391) Reference Source. added 1995 BPV Code Section XI Addenda 1996 Reference Source.
Page 1.3-2 and 1.3-3	added and Clarified Code Case use
Page 1.3-4	added NRC Ltr reference for approved Relief Requests.
Page 1.3-5	added NRC Ltr reference for approved Relief Requests
Page 1.4-1	added Relief Requests 10,11,12,and 13 to Plan.
Page 1.5-1	revised various drawings for minor discrepancies .
Page 1.6-1	added clarification to Note 2, and added Note 4 to reflect key for Sonics Iddeal Schedule works schedules.
Schedules	added all required B-P and C-H pressure tests and updated scheduled items to completed status. added additional schedule examinations for ASME Category C-F-1 Examinations. Corrected minor discrepancy in schedules by adding Code Case 498-1,491, and Code Case 522 to note sections.

Northern States Power Company
Monticello Nuclear Generating Plant
Document Control Distribution System

Document Distribution Manifest
Controlled Documents - Current

Name: US NRC
Title: ATTN: DOCUMENT CONTROL DESK
Company: MONTI LICENSING
Location: ATTN: MARC VOTH
MNGP-SAB/2ND FLOOR
11 COPIES OF USAR

Manifest Number: 2001-803
Distribution Type: I
Holder Number: 195
ID Number: YYYY09

Date Mailed: _____

Distribution Type: INSERVICE INSPECTION

Document Type	Document Number	Revision	Title
NOTE: The documents listed below are new or revised			
1991	ISI	4	INSERVICE INSPECTION EXAMINATION PLAN

NORTHERN STATES POWER COMPANY
414 NICOLLET MALL
MINNEAPOLIS, MN 55401

MONTICELLO NUCLEAR GENERATING PLANT
2807 WEST HIGHWAY 75
MONTICELLO, MINNESOTA 55362

INSERVICE INSPECTION EXAMINATION PLAN REVISION 4

THIRD INTERVAL
JUNE 1, 1992 THROUGH MAY 31, 2002

Prepared By: Daniel S. Whitcomb 10-23-2001
Daniel S. Whitcomb, ISI Program Engineer

Reviewed and Approved

By: Lee Khosla 10-29-2001
Lee Khosla, ISI Program Coordinator

RECORD OF REVISIONS

Page	Rev.
Review and Approval	4
i- iii	4
1.1-1	4
1.2-1 through 1.2-3	4
1.3-1 and 1.3-5	4
1.4-1 through 1.4-59	4
1.5-1 and 1.5-4	4
1.6-1 through 1.6-4	4
Inspection Schedule (Page 1 to 298)	4

Summary of Revisions-Rev 4

Page 1.2-1	Added Appendix VIII Supplemental Examination Requirements
Page 1.2-2	Corrected Relief Request No. 7 Rev 1. Added Appendix VIII Supplemental Training Requirements for NDE technicians. Added Code Case 491 for hanger inspections-clarification.
Page 1.3-1	added 10CFR50.55a (66FR16391) Reference Source. added 1995 BPV Code Section XI Addenda 1996 Reference Source.
Page 1.3-2 and 1.3-3	added and Clarified Code Case use
Page 1.3-4	added NRC Ltr reference for approved Relief Requests.
Page 1.3-5	added NRC Ltr reference for approved Relief Requests
Page 1.4-1	added Relief Requests 10,11,12,and 13 to Plan.
Page 1.5-1	revised various drawings for minor discrepancies .
Page 1.6-1	added clarification to Note 2, and added Note 3 to reflect key for Sonics Iddeal Scheduleworks schedules.
Schedules	added all required B-P and C-H pressure tests and updated scheduled items to completed status. added additional schedule examinations for ASME Category C-F-1 Examinations. Corrected minor discrepancy in schedules by adding Code Case 498-1,491, and Code Case 522 to note sections.

TABLE OF CONTENTS

	Page
Record of Revisions	i
Table of Contents	1.1-1
Introduction	1.2-1
Source Documents	1.3-1
Requests for Relief	1.4-1
ISI Boundary/Isometric Drawings	1.5-1
Inspection Plan and Schedule Tables (Pages 1-298)	1.6-1

INTRODUCTION

The ASME Code Section XI Inservice Inspection (ISI) Program is prepared and maintained by the Metal and Material Resources of Xcel Technical Services and Nuclear Management Company LLC.. The ASME Codes Section XI Inservice Testing (IST) and Repair and Replacement Program is prepared and maintained by the Monticello Plant Staff; the IST and Repair Replacement program has been submitted under separate cover.

The Monticello Third Ten Year Inservice Inspection Interval is from June 1, 1992 to May 31, 2002. Six refueling and maintenance outages are scheduled in this time frame. Components within the examination plan (Program Schedule B) have been selected using criteria in the 1986 Edition of the ASME Code, Section XI. The 1974 Edition, Summer 1975 Addenda to the Code is used to determine the extent of examination of Class I welds as allowed by 10CFR50.55a(b)(2)(ii). The 10CFR50.55a(g)(6)(ii)(A), Augmented Examination of Reactor Vessel have been identified.

The code editions implemented can be summarized as follows:

Class 1 (Quality Group A)	86 Section XI (extent of exam - 74S75 Section XI) 89 Section XI as required by 10CFR50.55a(g)(6)(ii)(A) 89 Section XI Addenda 1990 as required by Relief Request No. 7 "Leakage at Bolted CRD Housing Connections".
Class 2 (Quality Group B)	86 Section XI
Class 3 (Quality Group C)	86 Section X
NF (Hangers)	86 Section XI (Code Case 491.)
MC (Metal Containment)	92 Section XI & 92 Addenda, IWE
Appendix VIII--- Supplements	95 Section XI , 96 Addenda 10CFR50.55a(g)(6)(ii)(C) effective 11/22/1999.

Supplements 1,2,3 and 8	Implement May 22,2000
Supplements 4 and 6	Implement Nov. 22,2000
Supplements 11	Implement Nov. 22, 2001
Supplements 5,7,10,12,and 13	Implement Nov. 22, 2002

The examination plan and schedule was developed from ASME Code requirements, individual component examination history and plant scheduling needs such as optimizing insulation removal and scaffolding needs. During the second interval, a substantial number of component replacements and alterations were made (e.g. the recirculation piping replacement). The intent of the third interval scheduling was to be consistent with the second interval, subject to allowing meaningful accumulation of service time for new components.

Examination of Class 1 and Class 2 components will be in accordance with requirements listed in Table IWB-2500-1 and Table IWC-2500-1, respectively, of the Code, 1986 Edition, and 10CFR50.55a(g)(6)(ii)(A)(57FR34666), except where relief has been requested. Relief Request No. 7 Rev. 1, approved by NRC Ltr. dated 10/18/94, states that CRD Bolting will be inspected in accordance with 1989 Section XI Addenda 1990.

Containment inspection will be in accordance with requirements listed in table IWE 2500-1 respectively of the Section XI Code, 1992 Edition with 92 Addenda, except where relief has been requested. The containment in-service inspection program is not submitted as part of this ISI plan as allowed by 10CFR55a(g)(6)(ii)(B)(5). The containment inspection program will be maintained and available for audit after 9 September 2001at the plant site.

Class 1, Class 2 and Class 3 hangers have been identified in accordance with IWB, IWC and IWD, respectively. Hanger examination will be completed in accordance with ASME Section XI, Subsection IWF and Code Case 491. Integral attachments will be examined in accordance with the appropriate section of the Code .

Inservice inspection examinations are performed by personnel qualified and certified by written practice to the 1986 Edition of the Code, SNT-TC-1A and PDI (Performance Demonstrated Initiative) to perform Appendix VIII—Supplements, referenced in ASME Section XI, 1995 Edition , 1996 addenda. Additional training for UT examination person shall also include the requirements of 10CFR50.55a(b)(xiv).

The Section XI Repair and Replacement Program, System Pressure Tests and Snubber Functional Tests are administered by the Monticello Plant Staff. Activities under the Repair and Replacement Program, System Pressure Tests and Snubber Functional Tests are reported in the "Inservice Inspection Summary Report" following each refueling outage.

The ASME Section XI Inservice Inspection Program is in six parts: Introduction, Source Documents, Requests for Relief, ISI Boundary Drawings, ISI Isometric

Drawings, and a table containing the Inservice Inspection Examination Plan and Schedule. The ISI Boundary Drawings outline Quality Group Classifications, (A, B and C). The ISI Isometric Drawings delineate ASME Section XI components or items that are included in the program.

The Inservice Inspection Examination Plan and Schedule lists the ASME Section XI components by isometric drawing number, system, item and item description. The examination plan and schedule identify the ASME Section XI Item Number listed in Tables IWB-2500-1, IWC-2500-1,IWD-2500-1 and Subsection IWF, thus identifying the examination method. The examination schedule lists the anticipated year for the examination of a given component. The examination schedule is intended to be flexible to allow for deviations in outage length and outage work scope. Therefore, the schedule may be changed, as allowable by the Code, without further notification

The examination plan and schedule contains certain non-code items to be examined or examinations beyond Section XI Code requirements. These augmented items include licensee initiated examinations on NC-7879-6/Tank and NC-ISI-37/W-1, W-2, W-3, W-4, W-12, W-12A shown in the plan and schedule. These items will be examined in accordance with the Section XI Code to the extent practical. Relief requests will not be submitted for these non-code exams if Section XI Code requirements can not be met. Non-code exams are also subject to change without prior notification to the NRC.

Monticello was built prior to the implementation of Section XI Access Requirements. As a result, some components that require examination may not be completely accessible.

SOURCE DOCUMENTS

The following referenced source documents described and listed below are basis document use and applicable to the Monticello Third Interval ISI plan.

10CFR50.55a (53FR16051) & (66FR16391)

1974 Summer 75 B&PV Code Section XI

1986 B&PV Code Section XI

1989 B&PV Code Section XI addenda 1990.

1992 B&PV Code Section XI, addenda 1992 Subsection IWE

1995, B&PV Code Section XI, addenda 1996.

Monticello Technical Specification 3.15/4.15

10CFR-50.55a(g)(6)(ii)(A)(57FR34666) "Augmented Examination of Reactor Vessel IN-96-36." (M96024A).

10CFR-50.55a(g)(6)(ii)(A)(64FR51370) ASME Section XI,1995 Edition with 1996 addenda, Appendix VIII Supplements.

10CFR-50.55a(g)(6)(ii)(A)(66FR16391) Appendix VIII Supplement 4 Length sizing correction.

NUREG 0619 (BWR FW and CRDRL Nozzle Cracking NRC commitments(M810223A, M81024A, M81025A M81026A, M89116A, M89117A, M89118A, M89119A, M900095A, M90096A)

USIA-10	NSP Letter 11/3/81	VT Feedwater Sparger
	NSP Letter 5/9/83	CRD Return Line

NUREG/CR 3052 (Jet Pump Beam UT (M89114A))

Generic Letter 88-01 & NUREG 0313, Rev 2 (IGSCC (M88080A, M88082A)
Note: All Monticello welds meet NUREG-0313, Rev. 2. Category A.

Regulatory Guide 1.150, Rev. 1 & Generic Letter 83-15

Regulatory Guide 1.147, Rev. 12 dated May.1999
Note: All Code Cases accepted by the Nuclear Regulation Commission for use as described in Regulatory Guide 1.147 are allowed to be used at Monticello without specifically referencing the Code Case in this plan. When Code case is selected for use further revision of the ISI plan will list the code cases used.

Code Cases

The following listed code cases have been used at Monticello and are allowed for continue use during the Third Interval, although some Code Cases listed here are no longer reference in Regulatory guide 1.147 due to superceded revision.

Code Case N-307-1	Revised Ultrasonic Examination Volume for Class I Bolting, Table IWB-2500-1, Examination Category B-G-1, When the Examinations are Conducted from the Center Drilled Hole
Code Case N-416-1	Alternate Rules for Hydrostatic Testing of Repair or Replacement of Class 2 Piping, Section XI, Division 1 (Note: This revision of N-416 does not conflict with Code Case N-498)

Condition of Use for N-416-1, Additional surface examination should be performed on the root (pass) layer of the butt and socket welds of the pressure retaining boundary of Class 3 components when the surface examination method is used iaw Section III.

Code Case N-435-1	Alternative Examination Requirements for Vessels With Wall Thickness 2 in. or Less, Section XI, Division 1
Code Case N-460	Alternative Examination Coverage for Class I and Class 2 Welds, Section XI, Division I

Code Case N-461	Alternative Rules for Piping Calibration Block Thickness, Section XI, Division I, with additional requirements
Condition of Use N-461	Thickness measurements and weld joints contour of the pipe and component must be known and used b the inspector who conducts UT examinations.
Code Case N-491	Alternative Rules for Examination of Class 1, 2, 3, and MC Component Supports of Light-Water Cooled Power Plants. Section XI, Division 1
Code Case N-498	Alternate Rules for 10-Year System Hydrostatic Testing for Class 1 and 2 Systems, Section XI, Division 1
Code Case N-498-1	Alternative Rules for 10 Year System Hydrostatic Testing for Class 1,2, and 3 Systems.
Code Case N-522	Pressure Testing of Containment Penetration Piping.
Condition of Use N-522	The test should be conducted at peak calculated containment pressure and the test procedure should permit the detection and location of through wall leakage in containment isolation (CIV) and pipe segment between the CIVs.
Code Case N-524	"Alternative Examination Requirements for Longitudinal Welds in Class 1 and 2, Piping"

LER 89-021 "Crack on Jet Pump Riser Brace Due to fatigue." (M94031A).

LER 97-010 "Failure to Include Supports on Reactor Head Vent" (M97054A)

LER 97-004 "Failure to Submit Relief Request for Limited Inservice Inspection Examination" (M97024A, M97025A).

NUTECH Report - NSP-56-121-6, Rev. 0

IEB 80-13 Cracking in Core Spray Spargers

NRC Generic Letter 87-11 "Relaxation in Arbitrary Intermediate Pipe Rupture Requirements."

NRC Generic Letter 94-003 "Inter-granular Stress Corrosion Cracking of Core Shrouds in BWR's."

NRC Bulletin 79-14 "Seismic Analysis for As-Build Safety Related Piping Systems".

NRC IR263/89022-01 "Notice of Violation" (M89147A, M89148A, M89149A, M89150A)

NRC IR 263/96006 "Notice of Violation" (M96025A)

NRC Ltr. 10/18/93 "Request for Additional Information on MNGP 3rd 10 Year Interval ISI Program Plan (TAC M82545)

NRC Ltr. 7/01/94 "MNGP Request for Relief from ASME BPV Code Section XI, Reactor Coolant Pressure Boundary, Post Repair Hydrostatic Test(TAC M89501).

NRC Ltr. 10/24/94 "Evaluation of 3rd 10 Year ISI Plan and Associated Reliefs. (TAC M82545).

NRC Ltr. 11/2/94 "MNGP –Approval of Code Case N-416-1 as alternative to required Hydrostatic Pressure Test: (TAC M90561).

NRC Ltr. 11-19-97 "Request for Relief No.8 of 3rd 10 year ISI Plan.(TAC No. 96255). (M97030A).

NRC Ltr. 12-28-98 "MNGP –Evaluation of Relief Request No.9 (for the 3rd 10 Year ISI Program Plan. (TAC No. 97488).

NRC Ltr. 8-4-99 " MNGP-Evaluation of Relief Request No. 10 (for the 3rd 10 Year ISI Program Plan(TAC No, MA3397).

NRC Ltr. 10-25-2000 " MNGP-Evaluation of Relief Request No. 11 (for the 3rd 10 Year ISI Program Plan (TAC No, MA9114).

NRC Ltr. 8-1-2001 "MNGP-Evaluation of Relief Request No. 12 (for the 3rd 10 Year ISI Program Plan (TAC No. MB0261).

NRC Ltr. 8-27-2001 "MNGP-Evaluation ofRelief Request N. 13 (for the 3rd 10 Year ISI program Plan (TAC No. MB1833).

NSP Ltr. 12/20/93 "Response to Request for Additional information Concerning the MNGP 3rd 10 Year ISI Program (TAC M82545)

NSP Ltr. 10/02/94 "Request for authorization to utilize ASME BPV Code Case N-416-1."

NSP Ltr. 9/19/96 "Reply to Notice of Violation contained in NRC Inspection Report No. 50-263/96006."

MNGP Condition Report 96002217 "Assurance of Equipment operability and containment integrity during DBA conditions-IN96-49."

Requests for Relief

Relief Request No.	Description	Rev.
2	Reactor Vessel Stabilizer Brackets	1
3	Reactor Recirc. Pump	1
4	Valve Internal Surfaces	1
5	Reactor Vessel Nozzles N-13 & N-14	1
7	Leakage at Bolted Connections	1
8	Use of Existing Calibration Blocks	0
9	Use of High Alloy/High Nickel Calibration Block for Dissimilar metal Weld	0
10	Limited Examinations	0
11	Limited Examinations	0
12	Reactor Vessel Circumferential Welds	0
13	Appendix VIII Supplement 4 3.2 (c) .	0

ISI Relief Request No. 2 (Rev. 1)

Reactor Vessel Stabilizer Brackets

SYSTEM: Reactor Vessel

Class: 1

Category: B-H

Item: B 8.10

Impractical Examination Requirements:

Perform a volumetric or surface examination of 100% of the vessel stabilizer bracket to vessel welds.

Basis for Relief:

The vessel stabilizer brackets are surrounded by non-removable insulation, ventilation ductwork and electrical installations.

The stabilizer brackets do not provide support during normal operation. The brackets stabilize the vessel against local and seismic loads.

Alternate Examination:

The stabilizer brackets will be examined, if local or seismic loads are experienced.

Reference: Relief Request No. 51 - Second Ten Year Interval dated June 30, 1981; NRC SER dated November 29, 1990.

Approval Status:

Approved 10/18/94. Submitted with Examination Plan, Rev. 0.

ISI Relief Request No. 3 (Rev. 1)

Reactor Recirculation Pump

SYSTEM: Reactor Recirculation

Class: 1

Category: B-L-2

Item: B 12.20

Impractical Examination Requirements:

Perform a visual examination of the internal surfaces of one reactor recirculation pump.

Basis for Relief:

Inspection of a reactor recirculation pump internal surface requires disassembly of the pump. Disassembly of a pump results in a large amount of personal radiation exposure. Disassembly of the pump may result in damage to the pump.

Alternate Examination:

The internal surface of a reactor recirculation pump will be visually examined if a pump is disassembled for maintenance.

If a recirculation pump is not disassembled for maintenance in the third ten year interval, this will be reported at the end of the interval.

Reference: Relief Request No. 41 - Second Ten Year Interval dated June 30, 1981; NRC SERs dated November 29, 1990 and June 15, 1992.

Approval Status:

Approved 10/18/94. Submitted with Examination Plan, Rev 0.

ISI Relief Request No. 4 (Rev. 1)

Valve Internal Surfaces

SYSTEM: Various

Class: 1

Category: B-M-2

Item: B 12.50

Impractical Examination Requirements:

Perform a visual examination of the internal surfaces of Class 1 valves.

Basis for Relief:

Inspection of the internal surfaces of Class 1 valves requires disassembly of the valves. Disassembly of these valves results in a large amount of personal radiation exposure. Disassembly of the valves may result in damage to the valves.

Alternate Examination:

The Class 1 valve internal surfaces will be visually examined if the valve is disassembled for maintenance.

If the valves are not disassembled for maintenance in the third ten year interval, this will be reported at the end of the interval.

Reference: Relief Request No. 42 - Second Ten Year Interval dated June 30, 1981; NRC SERs dated November 29, 1990 and June 15, 1992.

Approval Status:

Approved 10/18/94. Submitted with Examination Plan, Rev 0.

ISI Relief Request No. 5 (Rev. 1)

Reactor Vessel Nozzles N-13 & N-14

SYSTEM: Reactor Vessel

Class: 1

Category: B-E

Item: B 4.12

Impractical Examination Requirements:

Perform a visual examination of the external surface to the reactor pressure vessel partial penetration nozzle welds for Nozzle N-13 and N-14 (Closure head flange leakage sensor).

Basis for Relief:

These nozzles do not see pressure during the vessel pressure test; unless the vessel flange o-ring leaks. Leakage past the o-ring is detected by the reactor vessel head-seal leak detection system. Therefore, a visual examination for leaks during the vessel pressure test will not detect leaks because the nozzles are not pressurized.

Pressurizing the nozzle in the wrong direction to perform a leak test will damage the vessel flange o-ring.

The nozzles are not accessible without damaging area insulation.

Alternate Examination:

No examination are proposed unless the insulation is removed for maintenance or other activities.

References: Relief Request No. 18 - Second Ten Year Interval, dated June 30, 1981; NRC SER dated November 29, 1990.

Approval Status:

Approved 10/18/94. Submitted with Examination Plan, Rev. 0.

ISI Relief Request No. 7 (Rev. 1)
(Page 1 of 4)

Leakage at Bolted CRD Housing Connections

SYSTEM: Bolted CRD Housing Bolted Joint Class: 1

Category: N/A Item: N/A

Impractical Examination Requirements:

IWA-5250(a)(2): If leakage occurs at a bolted connection, the bolting shall be removed and VT-3 examined.

Basis for Relief:
10 CFR Part 50, Section 50.55a(a)(3), which states,(in part);

"Proposed alternatives to the requirements of paragraphs (c), (d),(e),(f),(g), and (h) of this section or portions thereof may be used when...

(ii) Compliance with the specified requirements of this section would result in hardship or unusual difficulty with out a compensating increase in the level of quality and safety."

The CRD (Control Rod Drive) housings are flanged connections beneath the reactor vessel that are used to secure the 121 CRD mechanisms in position below the vessel. Each of the 121 CRD to CRD housing bolted joints utilizes eight bolts, washers, and nuts to hold the CRD mechanism in position. The joint also utilizes three hollow metal O-rings to provide a water tight seal capable of withstanding full reactor pressure at normal operating temperatures.

The CRD housing joints are VT-2 examined as part of the periodic reactor pressure vessel Leakage and Hydrostatic pressure tests. These tests are conducted with the vessel temperature much less than the design operating temperature. For a typical test, the vessel temperature would be <212°F, as compared to a normal operating temperature of about 540^{0}F. It is not unusual for these bolted joints to leak slightly during periodic reactor vessel pressure tests conducted at test temperatures below normal operating temperature. This is a condition identified in the original design of the connection by the Architect/Engineer, General Electric (GE). GE developed guidance to permit

ISI Relief Request No. 7 (Rev. 1)
(Page 2 of 4)

evaluation of a leaking CRD housing bolted connection over a period of time, while at test pressure, to determine whether the leak will stop once the vessel heats up to normal operating pressure. This leakage evaluation criteria is incorporated into the VT-2 tests for these joints.

Compliance with Code Requirement IWA-5250(a)(2) represents a hardship (burden) in the case of the CRD housing bolted joints because:

1) Examining the bolting would involve the accumulation of considerable personnel radiation exposure, since the work must be performed in a relatively high dose rate area inside the drywell, immediately below the reactor vessel. Typical shutdown dose rates in the vicinity of the bolting flanges would be on the order of 50 to 100 mr/hr.
2) Since the reactor pressure vessel test is critical path item, the additional time needed to depressurize the vessel, remove the bolting, perform the exam, and then re-pressurize the vessel to retest the joint would delay plant startup from an outage by an equivalent amount of time . The cost of such delays is significant, since it is estimated that the cost of extending the duration of an outage is $379,000 per day (including replacement power costs).

Compliance with Code requirement IWA-5250(a)(2) would not result in a compensating increase in quality or safety because:

1) CRD Housing joint leakage during (relatively) low temperature testing is not unexpected due to the design of the bolted joint. This joint is unusual in that it has hollow metal o-rings that require the CRD housing bolts to be tightened within a specific torque range in order to function properly at normal operating temperature. Thus, the bolts cannot simply be tightened to stop leakage as might be done for a conventional gasketed joint.
2) As noted previously, GE developed guidance to evaluate any CRD housing leakage to determine if the leakage will persist at normal operating temperature/pressure and should therefore be corrected. Leakage that is found to be acceptable per the guidance is not considered adverse to quality or safety and need not be corrected before startup. This type of analysis is consistent with Section XI

ISI Relief Request No. 7 (Rev. 1)
(Page 3 of 4)

3) Code paragraph IWB-3142, which allows analysis of the leakage for acceptability Performance of the VT-3 bolting examination does not represent a corrective action for the joint leakage and will not reduce the likelihood of joint leakage upon retest. Therefore, the VT-3 bolting examination does not contribute to increased quality or safety.

4) The bolts in the CRD housing connection are periodically examined when the joint is disassembled, per table IWB-2500-1, Item B7.80. Four of the eight bolts on each housing joint were replaced with new bolts in 1991. It was also reported in General Electric SIL 483 that only three uniformly distributed housing bolts are required to support the CRD mechanism. These factors provide a high degree of confidence in the long term safety and integrity of the CRD housing joints.

Earlier Section XI code editions invoked by Monticello's first and second ten year inspection interval programs did not include the subject examination requirement. A subsequent code revision which has been approved for use by the NRC, the 1990 Addenda to the 1989 Edition, limits the exam required to one bolt nearest the leak. Current Code committee activities include an effort to write a code case that limits this examination even further to specific joints and materials. All of these changes support the conclusion that this code requirement, as written, is overly restrictive and represents a hardship without a compensating increase in the level of quality or safety.

ISI Relief Request No. 7 (Rev. 1)
(Page 4 of 4)

Leakage at bolted Connections

Alternate Examination:
Any leakage found at a CRD housing bolted joint during a periodic pressure test performed at a temperature much less than operating temperature will be evaluated to determine whether it will stop leaking at operating temperature. If this evaluation shows the leak will stop as temperature increases to normal operating temperature, no further action will be taken. The acceptance criteria will be based on guidance provided by General Electric and will be included in the VT-2 tests for the joint (Note: This criteria has been submitted for NRC review). If the leak is determined to be unacceptable and the joint is disassembled to correct the leak, one of the bolts will be VT-3 examined in accordance with the 1990 Addenda requirement.

Approval Status:

Approved 10/18/94. NRC LTR: Evaluation of Third 10 Year Interval ISI Plan.

ISI Relief Request No. 8 (Rev. 0)
(Page 1 of 3)

Use of Existing Calibration Blocks

SYSTEM: Various

Class: 1 and 2

Category:	Item:
B-A	B 1.21, B 1.22, B 1.30, B 1.40
B-D	B 3.90, B 3.100
B-F	B 5.10, B 5.130
B-J	B 9.11, B 9.12, B 9.31
C-A	C 1.10, C 1.20
C-F-1	C 5.11, C 5.12
C-F-2	C 5.51, C 5.52

Examination Requirements:

IWA-2232(a) of ASME Section XI states that:

> "Ultrasonic examination of vessel welds greater than 2 inches thick shall be conducted in accordance with Article 4 of Section V, amended as follows."

Section V, Article 4, T-441.1.2 outlines the material specification requirements for calibration blocks. T-441.1.2.1 requires calibration blocks to be fabricated from one of the following: (a) nozzle drop out from the component; (b) a component prolongation, or; (c) material from the same material specification, product form, and heat treatment as one of the materials being joined.

IWA-2231(b) states that:

> "Ultrasonic examination of piping systems shall be conducted in accordance with ASME Section XI, Appendix III."

Appendix III, III-3411 which outlines the material specification requirements for calibration blocks requires that:

"(a) The calibration blocks for similar metal welds shall be fabricated from one of the same materials specified for the piping being joined by the weld; (b) Calibration blocks for dissimilar metal welds to be fabricated from the material specified for the side of the weld from which the examination will be conducted.

ISI Relief Request No. 8 (Rev. 0)
(Page 2 of 3)

Use of Existing Calibration Blocks

If the examination will be conducted from both sides, calibration reflectors shall be provided in both materials; (c) Where the examination is to be performed from only one side of the joint, the calibration block material shall be of the same specification as the material on that side of the joint. (d) If material of the same specification is not available, material of similar chemical analysis, tensile properties, and metallurgical structure may be used.

IWA-2232(d) states that:

> If the requirements of (a), (b), or (c) above are not applicable, the ultrasonic examination shall be conducted in accordance with the applicable requirements of Article 5 of Section V, amended as follows."

IWA-2232(d)(4)(a) states that:

> "The material from which the blocks are fabricated shall be: (1) a nozzle drop out from the component; (2) a component prolongation; or (3) material from the same material specification, product form, and heat treatment as one of the materials being joined. (b) For calibration blocks for dissimilar metal welds, the material selection shall be based on the material on the side of the weld from which the examination will be conducted. If the examination will be conducted from both sides, calibration reflectors shall be provided in both materials."

<u>Examination Requirement Not Met</u>

Several of the calibration blocks currently being used lack the documentation necessary to demonstrate compliance with the material specification requirements of Article 4 of Section V, Appendix III.

Several of the calibration blocks currently being used on pipe to fitting, or fitting to fitting joints where examination is performed from both sides of the joint, are fabricated to pipe material specifications.

ISI Relief Request No. 8 (Rev. 0)
(Page 3 of 3)

Use of Existing Calibration Blocks

Basis for Relief:

Documentation requirements existing at the time of fabrication did not require traceability to the material's chemical or physical certifications. Existing calibration blocks certification is verified through appropriate P-number grouping. The P-number grouping provides adequate assurance that the blocks will establish the proper ultrasonic calibration and sensitivity.

Proposed Alternative

Existing calibration blocks will be used as is. Any calibration blocks obtained in the future will be obtained with documentation to demonstrate compliance with the material specification requirements of ASME Code Section V Article 4 or Section XI, Appendix III, as applicable.

Justification for Granting Relief

It would be impractical to fabricate a new set of calibration blocks in order to satisfy the documentation requirements of the current Code. Existing records, indicate the appropriate P-number grouping, thereby providing adequate assurance that the blocks will establish the proper ultrasonic calibration and sensitivity.

Any new calibration block will be obtained with the documentation necessary to demonstrate compliance with the material specification requirements.

Time Period Relief is Requested For

Relief is requested for the Third Ten Year Interval.

Approval Status:

Approved 11/19/97. NRC Ltr. :Monticello Nuclear Generating Plant-Approval of Relief Request Number 8 of the third 10 Year Inservice Inspection Program (Tac. M96255).

ISI Relief Request No. 9 (Rev. 0)

Use of High Alloy/High Nickel Calibration Block for Dissimilar Metal Welds

SYSTEM: Various

Class: 1 & 2

Category: See Table 1

Item: See Table 1

Examination Requirements:

III-3411 (b) of ASME Section XI 1986 edition, Appendix III states:

> "Calibration blocks for dissimilar metal welds shall be fabricated from the material specified for the side of the weld from which the examination will be conducted. If the examination will be conducted from both sides, calibration reflectors shall be provided in both materials."

Proposed Alternative:

For examination of dissimilar metal welds conducted from both sides, the proposed calibration is to be based on a single block fabricated from the material specified for the high alloy/high nickel side of the weld. If indications other than geometry are noted on the carbon steel side, the scans will be repeated utilizing a calibration block of the same or of similar material (material of similar chemical analysis, tensile properties, and metallurgical structure).

Basis for Relief:

10 CFR 50, Section 50.55a(a)(3) states (in part):

"*Proposed alternatives to the requirements of paragraphs ... may be used when ...*
(i) The proposed alternatives would provide an acceptable level of quality and safety, ..."

Prior to the Winter 1985 revision of the code, paragraph III-3411 stated the following;

(a) The calibration blocks shall be fabricated from one of the materials specified for the piping being joined by the weld.

(b) Where the examination is to be performed from only one side of the joint, the calibration block material shall be of the same specification as the material on that side of the joint.

(c) If material of the same specification is not available, material of similar chemical analysis, tensile properties, and metallurgical structure may be used.

Since the third interval requires a change from the 77 Edition S78 Addenda to the 1986 edition of the Section XI code, a new requirement is imposed upon the plant. Compliance with this new requirement would require the plant to procure new calibration blocks for the carbon steel side of the dissimilar metal welds shown on Table 1.

Our existing calibration blocks have been procured for dissimilar metal examinations based on previous code requirements and opting for the conservative approach of using a block based on the high alloy/high nickel side of the weldment rather than the carbon side (see below).

The Monticello plant has determined that our existing calibration blocks along with a procedural requirement to scan at high sensitivity levels (if the material noise level in the component is not a minimum of 10% full scale height (FSH), the instrument gain is increased accordingly) and record all suspected flaw type indications regardless of amplitude, is a conservative and acceptable alternative method.

Justification for Granting Relief:

It is believed that the use of a single calibration standard for initial examination as noted above meets the requirements of 10 CFR Part 50, Section 50.55 (a) (3) to provide an acceptable level of quality or safety, or that compliance with the specified requirements would result in hardship or unusual difficulties without a compensating increase in the level of quality and safety.

The use of the high alloy/high nickel block for an examination performed from both sides of a dissimilar metal weld is considered appropriate for the following reasons;

a) The sensitivity established on a high alloy/high nickel block is generally equal to or greater than that which would be obtained on a carbon steel block. This provides a conservative reference sensitivity for examinations from the carbon steel side of the weldment.

b) The examination procedure requires the following;

   "Scanning shall be performed at the following gain levels, as applicable:
   - For angle beam examinations; a minimum of +6dB above Primary Reference (DAC) level. In addition, if the material noise level (Baseline Roll) in the component being examined is not a minimum of 10% FSH, the instrument gain shall be increased accordingly.
   - For straight beam examination, +6dB above reference level."

   "Any reflector suspected to be a flaw (i.e. crack) shall be evaluated and recorded, regardless of amplitude or size."

c) The velocity difference between high alloy/high nickel steels and carbon steels is minor and does not result in a significant angle variation.

d) The procedure requires reexamination using a calibration block of similar material if indications are noted that are not attributable to geometry. This ensures proper evaluation data is recorded.

e) Use of two separate calibrations for examination of a single component may result in greater radiation exposure to personnel due to increased time at the examination site required to perform separate setups and exams.

Time Period Relief is Requested For:

Relief is requested for the Third Ten Year Interval

Approval:

Approved 12/28/98 NRC Ltr.: Evaluation of Relief Request #9 for the Third 10 Year Interval Inservice Inspection Program (TAC M97488)

Table 1 - Dissimilar Welds

S/N	Iso	Item	Code	Matl 1	Matl 2	Config
995	13142-42-A	W-3	B9.11	A106 GR B	A182 TP347	Pipe to Pipe
996	13142-42-A	W-4	B9.11	A182 TP347	A106 GR B	Pipe to Pipe
1367	73880-A	W-2	B9.10	A240 304	A234 WPB	Pipe to El
423	13142-20-C	W-22	B9.11	A182 F304	A508 CL II	Flange to Noz
2388	FIG 1	W-9	B9.11	A508 CL II	A182 F304	Noz to Flange
2731	ISI-19	W-1	B5.20	B166	A336 CL F8	Noz to SE
2048	97005-B	W-18	B5.10	A182 F316	A508 CL II	SE to Noz
2034	97005-B	W-4	B5.10	A182 F316L	A508 CL II	SE to Noz
2062	97005-B	W-32	B5.10	A182 F316L	A508 CL II	SE to Noz
1964	97004-A	W-25	B9.10	A333 GR 6	A358 316L	Pipe to Pipe
1884	97003-A	W-25	B9.10	A333 GR 6	A358 316L	Pipe to Pipe
1906	97003-B	W-4	B9.10	A358 316L	A333 GR 6	Pipe to Pipe
2041	97005-B	W-11	B5.10	A182 F316L	A508 CL II	SE to Noz
2055	97005-B	W-25	B5.10	A182 F316L	A508 CL II	SE to Noz
2171	97006-B	W-32	B5.10	A182 F316L	A508 CL II	SE to Noz
2164	97006-B	W-25	B5.10	A182 F316L	A508 CL II	SE to Noz
2143	97006-B	W-4	B5.10	A182 F316L	A508 CL II	SE to Noz
2150	97006-B	W-11	B5.10	A182 F316L	A508 CL II	SE to Noz
2157	97006-B	W-18	B5.10	A182 F316L	A508 CL II	SE to Noz
1995	97005-A	W-1	B5.10	A508 CL II	A403 316W	Noz to SE
2102	97006-A	W-1	B5.10	A508 CL II	A403 316W	Noz to SE
2729	ISI-16	W-1	B5.10	A336 CL F8	A508 CL II	SE to Noz
2730	ISI-16	W-2	B5.10	A336 CL F8	A508 CL II	SE to Noz

ISI Relief Request No. 10
(Page 1 of 19)

Limited Examination

SYSTEM: Various
Category: Various

Class: 1 and 2
Item: Various

Impractical Examination Requirements:

ASME Section XI (1986 no addenda) Code requires examination of essentially 100% of weld length for in-service inspection (ISI) of components per Table IWB-2500-1, and IWC-2500-1. Reg. Guide 1.147 endorses Code Case N-460, "Alternative Examination Coverage for Class 1 and Class 2 Welds." This code case allows greater than 90% coverage of a weld to meet the "essentially 100%" requirement.

This relief request is submitted in accordance with a commitment (M97024A) made in NSP Letter to NRC dated: March 24, 1997 . Titled: LER 97-004 "Failure to Submit Relief Requests for Limited In-service Inspections Examinations".

This facility was designed and constructed with limited accessibility. Due to component configurations and/or physical barriers and interference, essentially 100% inspection coverage is not achievable on some ISI components items examined for the Third Ten Year Interval.

Basis for Relief:

The following 10 CFR 50.55a paragraphs apply to the in-service inspection of components in accordance with the ASME Section XI code:

50.55a(g)(1): For a boiling or pressurized water-cooled nuclear power facility whose construction permit was issued prior to January 1, 1971, components (including supports) must meet the requirements of paragraphs (g) (4) and (5) of this section to the extent practical.

50.55a(g)(4): Throughout the service life of a boiling or pressurized water-cooled nuclear power facility, components (including supports) which are classified as ASME Code Class 1, Class 2, and Class 3 must meet the requirements, except design and access provisions and pre-service examination requirements, set forth in Section XI of editions of the ASME Boiler and Pressure Vessel Code ... to the extent practical within the limitations of design, geometry and materials of construction of the components.

ISI Relief Request No. 10
(Page 2 of 19)

50.55a(g)(5)(iv): Where an examination requirement by the code or addenda is determined to be impractical by the licensee and is not included in the revised in-service inspection program as permitted by paragraph (g)(4) of this section, the basis for this determination must be demonstrated to the satisfaction of the Commission ...

Monticello was designed and constructed prior to development of ASME XI, therefore, plant and component design and layout for inspection coverage required by ASME Section XI Code in many cases, is not sufficient to permit satisfying the current code requirements. Inspection limitations are primarily due to obstructions and configuration interference.

Summary of the limited examinations are described below and also included in Table 1 attached.

Part A: **Category B-D**, "Full Penetration Welds of Nozzles in Vessels"

Reactor Vessel Nozzle N-2G NV: Coverage for nozzle/vessel weld is 51%.
Inspection limited due to nozzle configuration. (See Figure 1).

Reactor Vessel Nozzle N-2H NV: Coverage for nozzle/vessel weld is 47%.
Inspection limited due to two instrumentation attachments at bottom dead center and nozzle configuration. (See Figure 2).

Reactor Vessel Nozzle Inner Radius N-2H-IR: Coverage for the inner radius inspection is limited to 92% due to two instrument attachments at bottom dead center. (See Figure 3).

Reactor Vessel Nozzle N-3C NV: Coverage for nozzle/vessel weld is 51% inspection limited due to nozzle configuration. (See Figure 4).

Reactor Vessel Nozzle N-4B NV: Coverage for nozzle/vessel weld is 51%.
Inspection limited due to nozzle configuration and welded instrument attachments at 16" CW limits all scans. (See Figure 5).

Reactor Vessel Nozzle Inner Radius N-4B-IR: Coverage for the inner radius inspection is limited to 98%, due to instrumentation attachments located 6" from blend radius and 24" CW from TDC. (See Figure 6).

Reactor Vessel Nozzle N-7 NV: Coverage for nozzle /vessel weld is 89% limitation due to nozzle configuration. (See Figure 7).

Part B: **Category B-J**, "Pressure Retaining Welds in Piping".

RHR Return A weld W-10: Volumetric examination limited to 43% . Limitation due to weld orientation and pipe configuration. (See Figure 8).

RHR Return A weld W-11: Volumetric examination limited to 50%. Limitation due to configuration of flange and weldolet. (See Figure 9).

RHR Return B weld W-6: Volumetric examination limited to 88 %. Limitation due to proximity of structural beam. (See Figure 10).

Recirc. Manifold B weld W-13 LS U&D: Volumetric examination limited to 50% of long seam weld. Examination limited to only six inches of downstream long seam weld due to support interference . (See Figure 11).

Part C: **Category B-G-1**, "Pressure Retaining Bolting, Greater than 2 in. in Diameter."

Reactor Vessel Closure head nuts: Surface examination limited to 57%. Limitation is due to threading. (See Figure 12).

Reactor Vessel Ligament Threads in Flange: Volumetric examination limited to 96%. Limitation is due to seal ring groove on reactor flange. (See Figure 13).

Part D: **Category C-C**, "Integral Attachments for Vessels, Piping, Pumps, and Valves".

CRD Scram Header B hanger attachment H-7: Surface examination limited to 0%. Limitation due to restraint configuration. (See Figure 14).

RHR Discharge B, Double Spring 4 lugs H-9: Surface examination limited to 85%. Limitation due to stabilizing lug welded to clamp prohibits examination of one end of weld. (See Figure 15)

Part E: **Category C-F-2**, "Pressure Retaining Welds in Carbon Steel or Low Alloy Steel Piping,"

HPCI Steam Discharge Weld W-29: Volumetric and Surface examination limited to 80% and 58%. Limitations due to restraint with fillet weld on weld crown and downstream area of weld.(See Figure 16).

Additional Means of Establishing Integrity:

In addition, hydrostatic tests are performed during regular inspection intervals to ensure the piping system is capable of maintaining pressure integrity. System integrity is monitored continuously during normal operation by routine operator rounds during shift and remote monitoring methods, e.g., containment radiation monitoring, containment air monitoring, containment leakage detection and monitoring, containment temperature monitoring, etc.

Alternate Examination:

The nature of the limitations have been noted on the ISI examination reports and are included in the ISI Outage Summary Report. NSP will continue to document the limitations.

All in-service inspection at Monticello has been done to the greatest extent practical. When limitations to required inspections are encountered Materials &Special Process procedure ISI-LTS-1 is applied, which requires alternative examination techniques to be considered, or applied to gain the maximum obtainable inspection coverage practical. In all of the above items identified this procedure was used and the maximum practical inspection coverage was achieved.

The Reactor Vessel head nuts (Part C: Category B-G-1 "Pressure Retaining Bolting, Greater than 2 " in Diameter") require surface examination under 1986

ASME Code Sec. XI, Table IWB-2500-1, item B.6.10. Because of the limitation of examination methodology on the threaded region of the nuts, future examination on this item will be performed according to the requirements of 1992 ASME Code Sec. XI, Table IWB 2500-1, item B 6.10, which requires a visual, VT-1 inspection of the surface area of the nuts.

Table 1: Summary of Limited Examinations

CODE Category/item No.	SYSTEM	ISO	ITEM	METHOD	% Coverage	Limitation
B-D B 3.90	REACTOR VESSEL	FIG 5	N-2G NV	Volumetric	51	Figure 1
B-D B 3.90	REACTOR VESSEL	FIG 5	N-2H NV	Volumetric	47	Figure 2
B-D B 3.100	REACTOR VESSEL	FIG 5	N-2H- IR	Volumetric	92	Figure 3
B-D B 3.90	REACTOR VESSEL	FIG 5	N-3C NV	Volumetric	51	Figure 4
B-D B 3.90	REACTOR VESSEL	FIG 5	N-4B NV	Volumetric	51	Figure 5
B-D B 3.100	REACTOR VESSEL	FIG 5	N-4B- IR	Volumetric	98	Figure 6
B-D B 3.90	REACTOR VESSEL	FIG 1	N-7 NV	Volumetric	89	Figure 7
B-J B 9.31	RHR RETURN A	97003-A	W-10	Volumetric	43	Figure 8
B-J B 9.11	RHR RETURN A	97003-A	W-11	Volumetric	50	Figure 9
B-J B 9.11	RHR RETURN B	97004-A	W-6	Surface	88	Figure 10
B-J B 9.11	RECIRC MANIFOLD B	97006-B	W-13 LS-U&D	Volumetric	50	Figure 11
B-G-1 B 6.10	REACTOR VESSEL	FIG 6	NUTS	Surface	57	Figure 12
B-G-1 B 6.40	REACTOR VESSEL	FIG 6	LIGAMENTS	Volumetric	96	Figure 13
C-C C 3.20	CRD SCRAM HDR B	93268-3A	H-7	Surface	0	Figure 14
C-C C 3.20	RHR DISCHARGE B	13142-18a	H-9	Surface	87	Figure 15
C-F-2 C 5.51	HPCI STEAM DISCH	13142-19A	W-29	Volumetric	80	Figure 16
C-F-2 C 5.51	HPCI STEAM DISCH	13142-19A	W-29	Surface	58	Figure 16

FIGURE 1

Reactor Vessel Nozzle to Vessel N-2G NV

Limitation Data Sheet

Initial Exam Report No: **98-0089**

Procedure No. **ISI-UT-3A (Rev. 7)**

ISO No. **ISI-FIG 5**

Item No. **N-2G NV**

Description of Limitation:
All scans limited due to nozzle configuration. Exam areas shown below.

Sketch of Limitation:

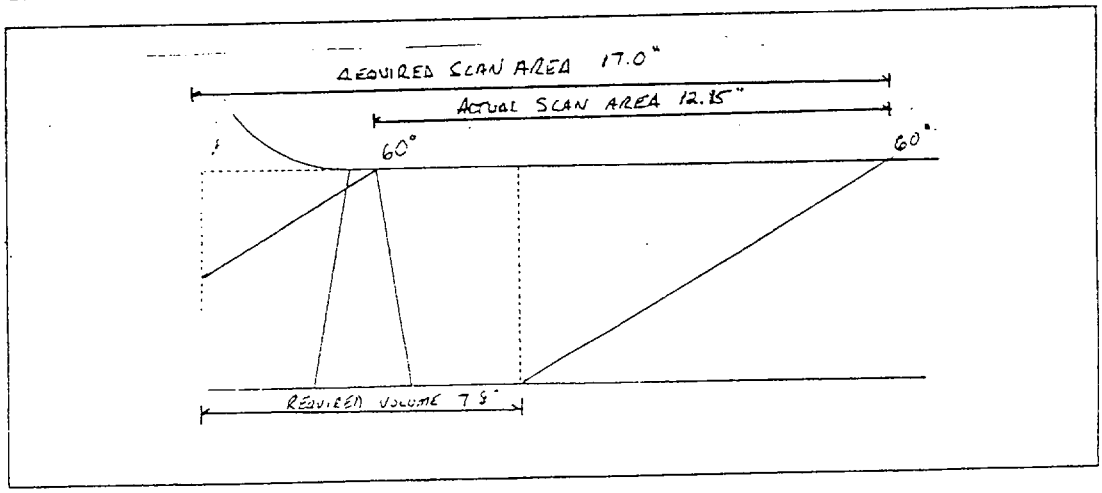

Limitation removal requirements:
None.

FIGURE 2

Reactor Vessel Nozzle to Vessel N-2H NV

Limitation Data Sheet

Initial Exam Report No: **98-0087**

Procedure No. **ISI-UT-3A (Rev. 7)**

ISO No. **ISI-FIG 5**

Item No. **N-2H NV**

Description of Limitation:
All scans limited due to nozzle configuration. Exam areas shown below. All scans also limited due to instrument attachment at BDC.

Sketch of Limitation:

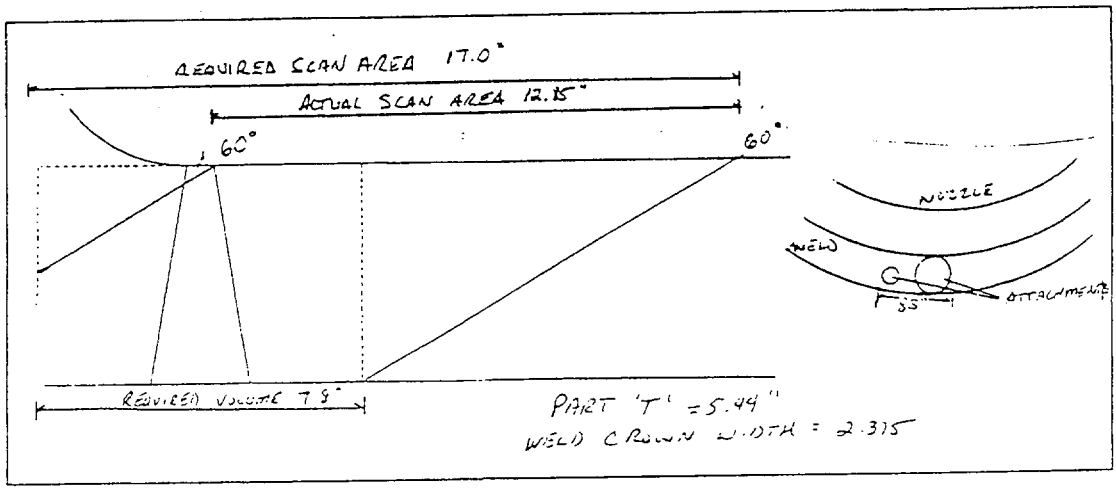

Limitation removal requirements:
None.

ISI Relief Request No. 10
(Page 7 of 19)

Figure 3

Reactor Vessel N-2H Inner Radius

Limitation Data Sheet

Initial Exam Report No: **98-0106** Procedure No. **ISI-UT-5 (Rev. 5)**

ISO No. **ISI-FIG 5** Item No. **N-2H Inner Radius**

Description of Limitation:
Two instrumentation attachments at BDC.

Sketch of Limitation:

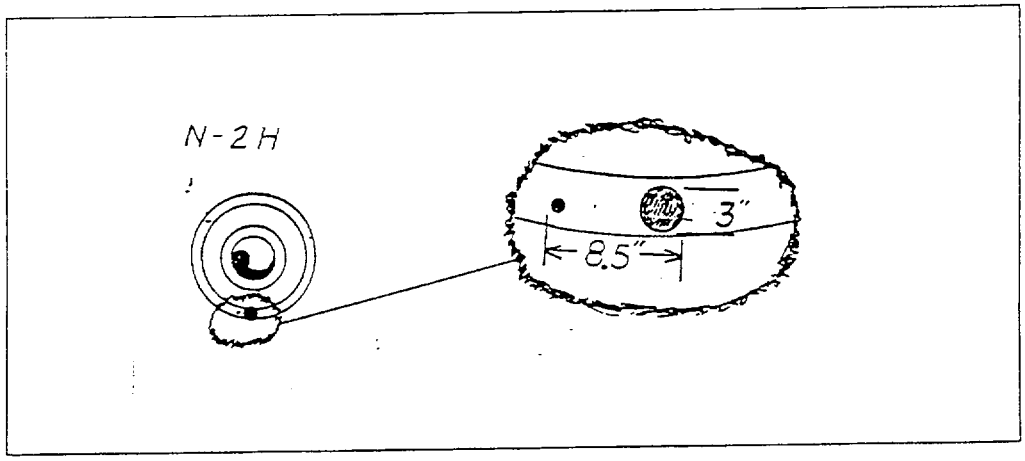

Limitation removal requirements:
None.

ISI Relief Request No. 10
(Page 8 of 19)

FIGURE 4

Reactor Vessel Nozzle to Vessel N-3C NV

Limitation Data Sheet

Initial Exam Report No: **98-0085** Procedure No. **ISI-UT-3A (Rev. 7)**

ISO No. **ISI-FIG 5** Item No. **N-3C Nozzzle-to-Vessel Weld**

Description of Limitation:
All scans limited due to nozzle configuration. Exam areas shown below.

Sketch of Limitation:

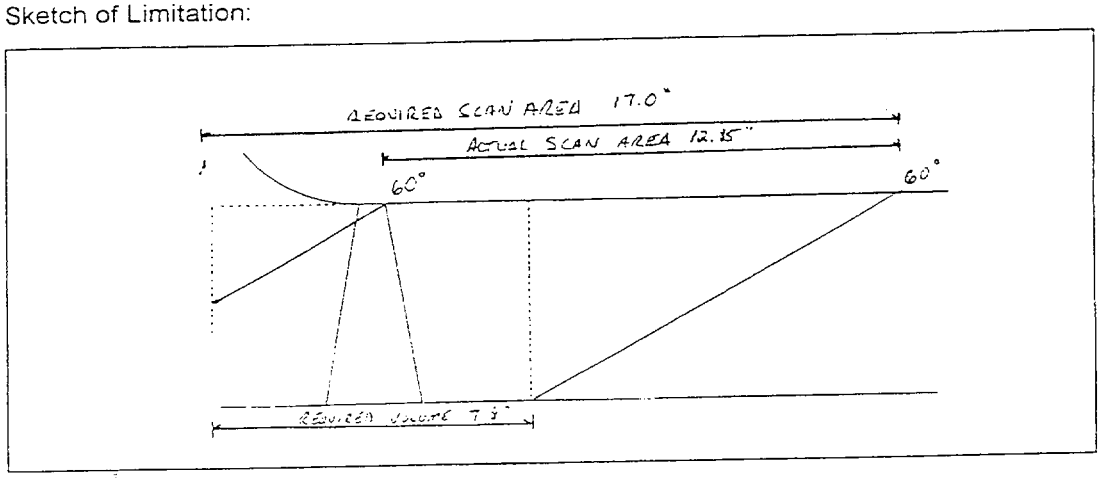

Limitation removal requirements:
None.

ISI Relief Request No. 10
(Page 9 of 19)

FIGURE 5

Reactor Vessel Nozzle to Vessel N-4B NV

Limitation Data Sheet

Initial Exam Report No: **98-0063**

Procedure No. **ISI-UT-3A (Rev. 7)**

ISO No. **ISI-FIG 5**

Item No. **N-4B NV**

Description of Limitation:
Nozzle configuration limits all scans, also welded instrument attachments 2" from weld toe 16" CW limits all scans.

Sketch of Limitation:

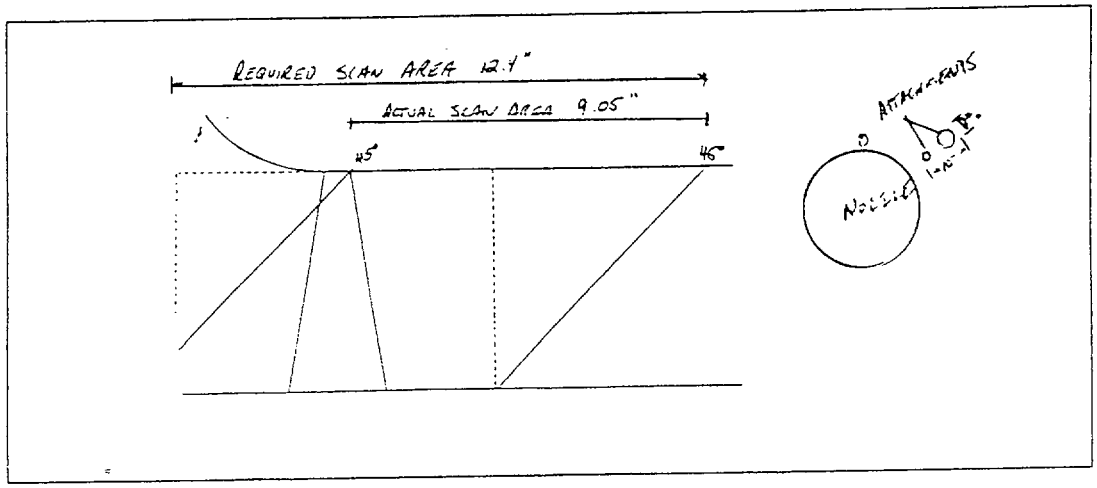

Limitation removal requirements:
Removal is not possible.

Figure 6

Reactor Vessel N-4B Inner Radius

Limitation Data Sheet

Initial Exam Report No: **98-0058** Procedure No. **ISI-UT-5 (Rev. 5)**

ISO No. **ISI-FIG 5** Item No. **N-4B**

Description of Limitation:
Instrumentation attachments located 6" from blend radius and 24" CW from TDC.

Sketch of Limitation:

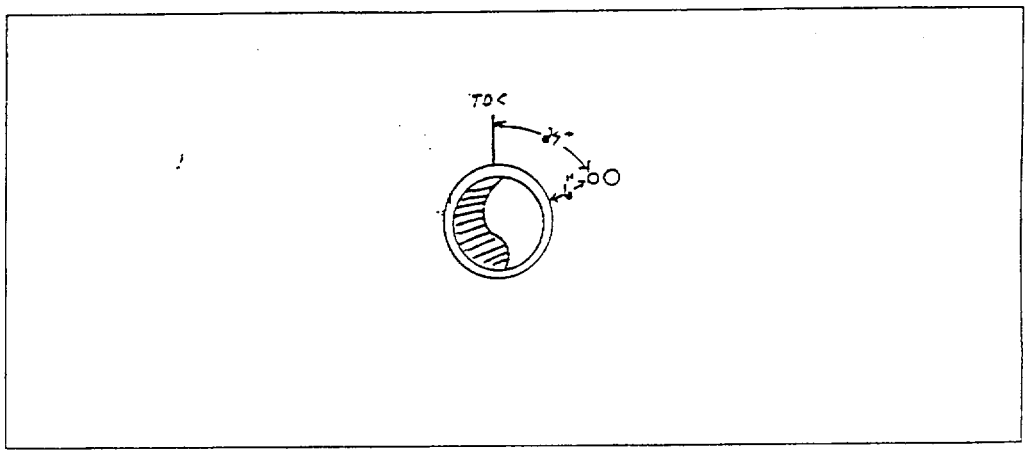

Limitation removal requirements:
None.

ISI Relief Request No. 10
(Page 10 of 19)

FIGURE 7

Reactor Vessel Nozzle to Vessel N-7 NV

Limitation Data Sheet

Initial Exam Report No: **98-0234(0°)** Procedure No. **ISI-UT-3A (Rev. 7)**
98-0241(45°); 98-0242(60°)

ISO No. **ISI-FIG 1** Item No. **N-7 NOZZLE / HEAD VENT**

Description of Limitation:
Scan 2 area limited to 1.5" from centerline on nozzle side due to nozzle configuration. Scan 1 scan area limited to 6.65" for 45° and 9.5" for 60° due to nozzle configuration. 88.9% code coverage achieved.

Sketch of Limitation:

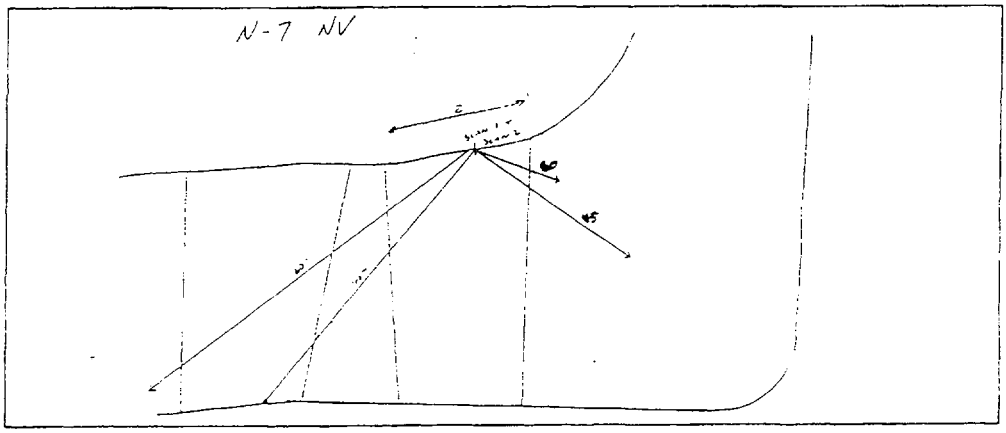

Limitation removal requirements:
None.

FIGURE 8

RHR Return A W-10

Limitation Data Sheet

Initial Exam Report No: **98-0141** Procedure No. **ISI-UT-1 (Rev. 12)**

ISO No. **ISI-97003-A** Item No. **W-10**

Description of Limitation:
No scan on 16" pipe due to weld orientation. No circ scans on weld and 16" pipe due to configuration. 1.25" average scan area on weldolet side. 43.4% code coverage achieved.

Sketch of Limitation:

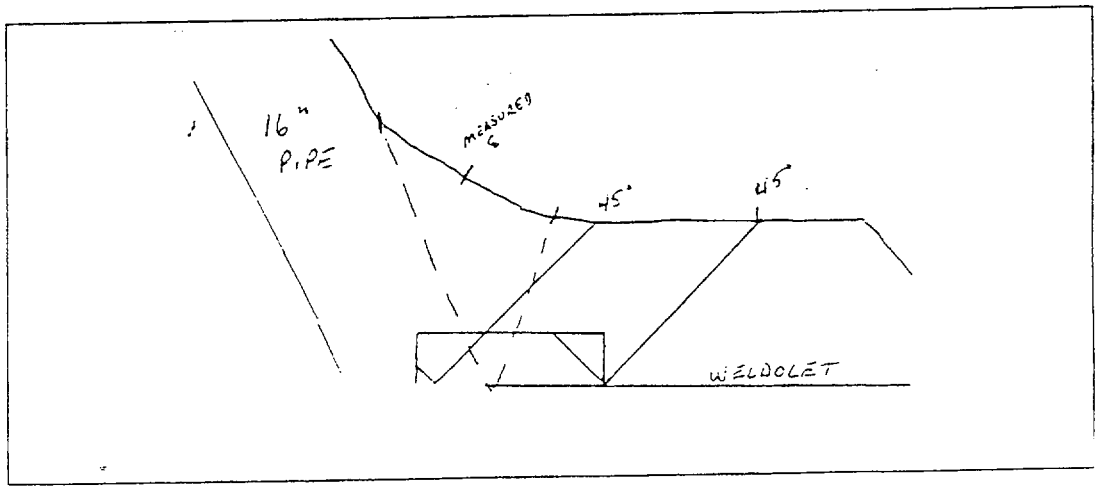

Limitation removal requirements:
None.

FIGURE 9

RHR Return A W-11

Limitation Data Sheet

Initial Exam Report No: ~~98-0141~~ 98-0142 Procedure No. **ISI-UT-1 (Rev. 12)**

ISO No. **ISI-97003-A** Item No. **W-11**

Description of Limitation:
No scans 1 & 2 due to configuration of flange and weldolet. 50.0% code coverage achieved.

Sketch of Limitation:

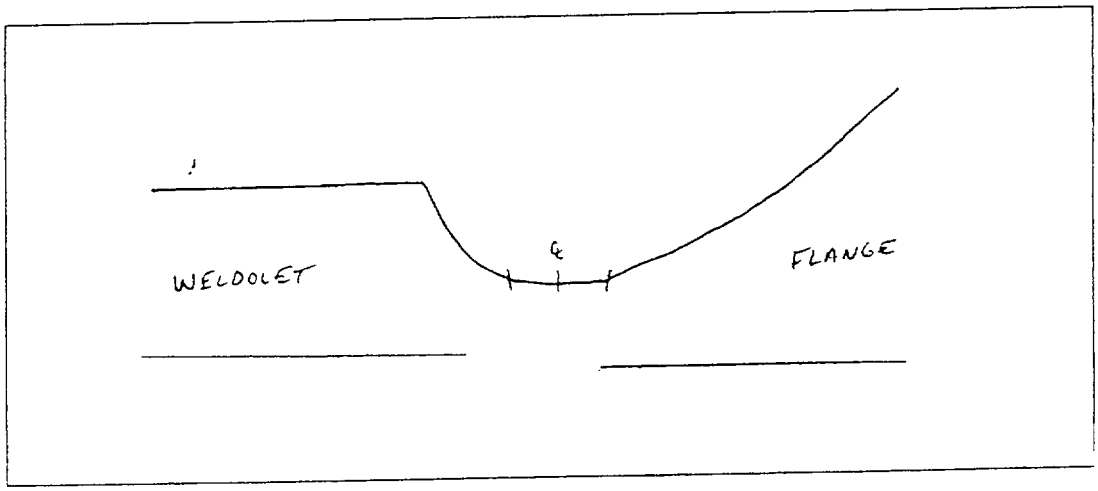

Limitation removal requirements:
None.

FIGURE 10

RHR Return B W-6

Limitation Data Sheet

Initial Exam Report No: **98-0160** Procedure No. **ISI-MT-1 (Rev. 9)**

ISO No. **ISI-97004-A** Item No. **W-6**

Description of Limitation:
Limitation due to structural beam at 3" CW and 3" CCW from 0°.

Sketch of Limitation:

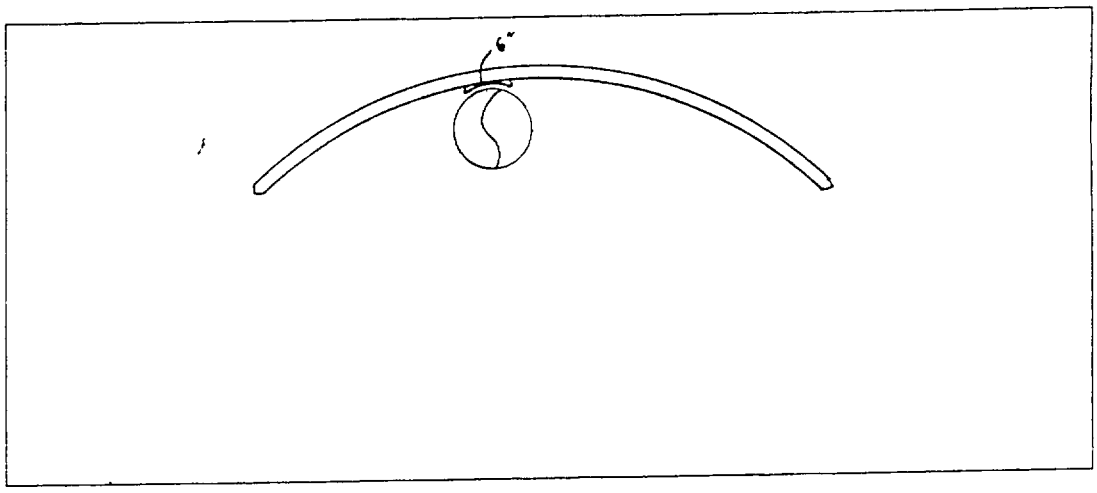

Limitation removal requirements:
None. Permanent building structure.

ISI Relief Request No. 10
(Page 14 of 19)

FIGURE 11

Recirc. Manifold B W-13 LS-U&D

Limitation Data Sheet

Initial exam report # 94-0094 Procedure # ISI UT-16 Rev. 7

ISO # ISI-97006-B Item # W-13 LS D

Description of Limitation ONLY 6" OF DOWNSTREAM LONGSEAM EXAMINED DUE TO SUPPORT INTERFERENCE. 100% COVERAGE OBTAINED ON W-13, 50% COVERAGE OBTAINED ON DOWNSTREAM LONG SEAM

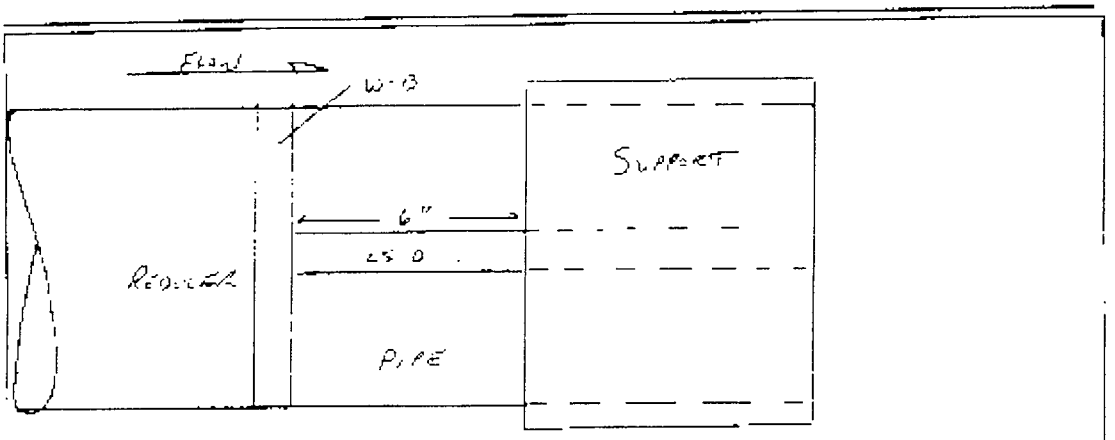

Sketch of Limitation

Limitation removal requirements NONE WELDED SUPPORT

FIGURE 12

Reactor Vessel Closure Nuts

Limitation Data Sheet

Initial Exam Report No: **98-0263** Procedure No. **ISI-MT-2 (Rev. 9)**

ISO No. **ISI FIG 6** Item No. **NUTS**

Description of Limitation:
No exam on inner threads due to configuration.
57.1% coverage obtained.

Sketch of Limitation:

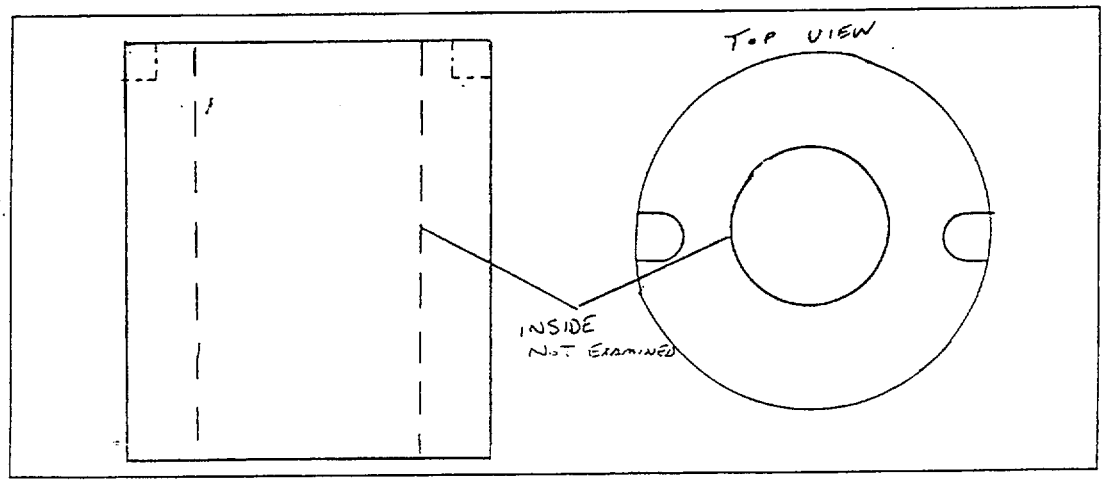

Limitation removal requirements:
None.

ISI Relief Request No. 10
(Page 16 of 19)

Figure 13

Reactor Vessel Ligaments

Limitation Data Sheet

Initial Exam Report No: **98-0014** Procedure No. **ISI-UT-7 (Rev. 5)**

ISO No. **ISI-FIG 6** Item No. **LIGAMENTS**

Description of Limitation:
"Seal ring" groove. Ref. drawing NX-8290-63 (Rev A). Examined studs: 3, 5, 7, 8, 9, 10, 11, 12, 14, 16, 17, 20, 21, 22, 44, 45, 46, 53, 54, 57, 60

Sketch of Limitation:

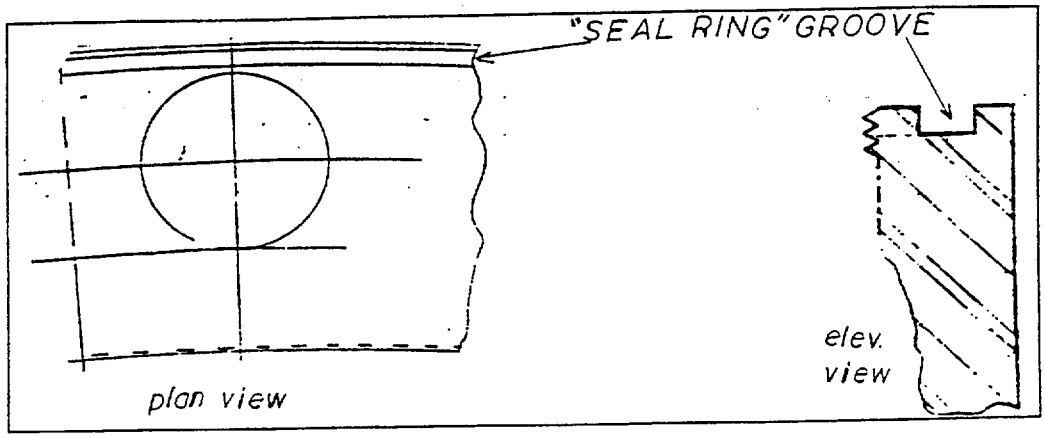

Limitation removal requirements:
None.

FIGURE 14

CRD Scram Header B H-7

TITLE: Limitations to NDE
NUMBER: ISI-LTS-1 Revision 0

Figure 3
Limitation Data Sheet

Initial exam report # 97-0137 Procedure # ISI-MT-1 REV. 8

ISO # ISI-93268-3-A Item # H-7

Description of Limitation NO ACCESS TO (4) LUG FILLET WELDS. EXAMINATION WAS NOT PERFORMED DUE TO RESTRAINT CONFIGURATION, SKETCH.

Sketch of Limitation

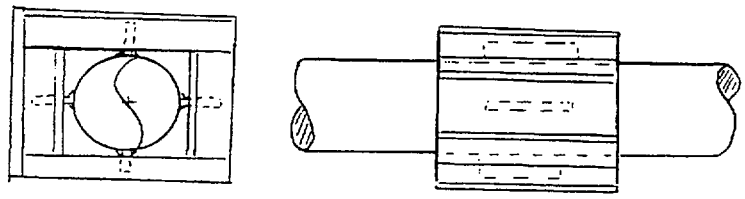

Limitation removal requirements N/A

ISI Relief Request No. 10
(Page 18 of 19)

FIGURE 15.

RHR Discharge B H-9

Limitation Data Sheet

Initial exam report # 94-0220 Procedure # ISI-MT-1 R.7

ISO # ISI-13142-18-A Item # H-9

Description of Limitation "STABILIZING" LUG WELDED TO CLAMP PROHIBITS EXAMINATION OF ONE END OF WELD. CLAMP PROHIBITS EXAMINATION OF REQUIRED 1/2" OF ADJACENT BASE METAL.

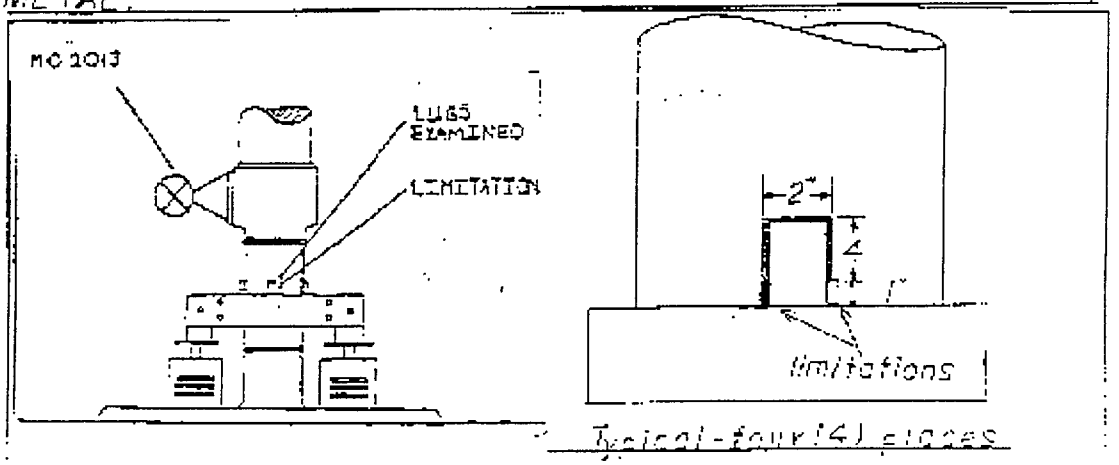

Sketch of Limitation

Limitation removal requirements REMOVAL OF CLAMP ASSEMBLY REQUIRED TO ACHIEVE ADDITIONAL COVERAGE.

ISI Relief Request No. 10
(Page 19 of 19)
FIGURE 16.

HPCI Steam Discharge W-29

TITLE: Limitations to NDE
NUMBER: ISI-LTS-1 Revision 0

Figure 3
Limitation Data Sheet

Initial exam report # 97-0094 (BL) (45°) 97-0095 BL (60°) 97-0096 BL (70°)

Procedure # ISI-UT-1 REV. 11

ISO # ISI-13142-19A

Item # W-29

Description of Limitation RESTRAINT WITH FILLET WELD ON WELD CROWN AND DOWNSTREAM AREA OF WELD. SEE BELOW FOR COVERAGE PLOTS WITH 45°, 60°, AND 70° ANGLE.

Sketch of Limitation NOTE: (FROM MT REPORT 97-C093) WELD WIDTH = 0.9" ACCESSIBLE WELD SURFACE = 0.6" RAO 7/31/97

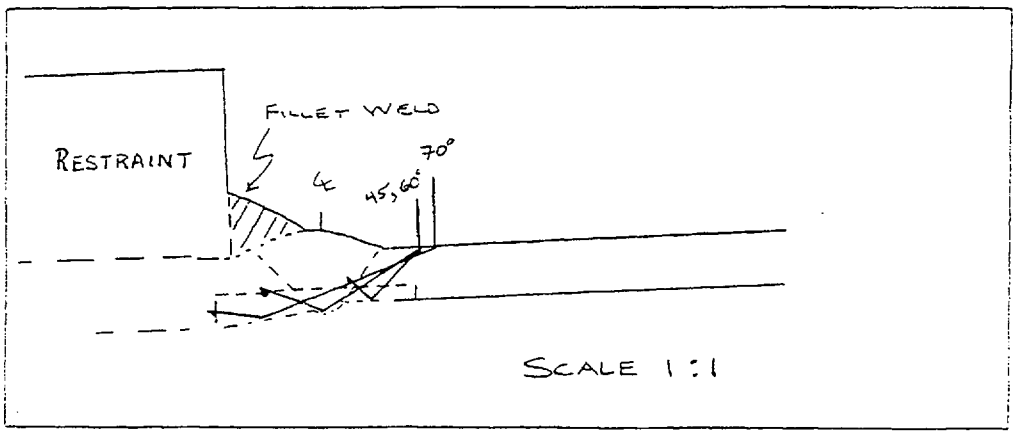

Limitation removal requirements NOT FEASIBLE RAO 7/31/97

Approval:

Approved August 4, 1999 NRC (TAC No. MA3397).

ISI Relief Request No 11
Limited Examination

SYSTEM: Various
Category: Various

Class: 1
Item: Various

Impractical Examination Requirements:

ASME Section XI (1986 no addenda) Code requires examination of essentially 100% of weld length for in-service inspection (ISI) of components per Table IWB-2500-1. Reg. Guide 1.147 Rev. 12 endorses Code Case N-460, "Alternative Examination Coverage for Class 1 and Class 2 Welds." This code case allows greater than 90% coverage of a weld to meet the "essentially 100%" requirement.

NRC Information Notice 98-42 "Implementation of 10 CFR 50.55a(g) In-service Inspection requirements" Dec. 1, 1998, states "The NRC has adopted and further refined the definition of ""essentially 100 percent"" to mean greater than 90 percent " in 10 CFR 50.55a(g)(6)(ii)(A)(2) for required examination coverage of reactor pressure vessel welds. This standard has been applied to all examination of welds or other areas required by ASME Section XI.

This relief request is submitted in accordance with a commitment (M97024A) made in NSP Letter to NRC dated: March 24, 1997 . Titled: LER 97-004 "Failure to Submit Relief Requests for Limited In-service Inspections Examinations".

This facility was designed and constructed with limited accessibility. Due to component configurations and/or physical barriers and interference, essentially 100% inspection coverage is not achievable on some ISI components items examined for the Third Ten Year Interval.

Basis for Relief:

The following 10 CFR 50.55a paragraphs apply to the in-service inspection of components in accordance with the ASME Section XI code:

50.55a(g)(1): For a boiling or pressurized water-cooled nuclear power facility whose construction permit was issued prior to January 1, 1971, components (including supports) must meet the requirements of paragraphs (g) (4) and (5) of this section to the extent practical.

50.55a(g)(4): Throughout the service life of a boiling or pressurized water-cooled nuclear power facility, components (including supports) which are classified as ASME Code Class 1, Class 2, and Class 3 must meet the requirements, except design and access provisions and pre-service examination requirements, set forth in Section XI of editions of the ASME Boiler and Pressure Vessel Code ... to the extent practical within the limitations of design, geometry and materials of construction of the components.

50.55a(g)(5)(iv): Where an examination requirement by the code or addenda is determined to be impractical by the licensee and is not included in the revised in-service inspection program as permitted by

paragraph (g)(4) of this section, the basis for this determination must be demonstrated to the satisfaction of the Commission ...

Monticello was designed and constructed prior to development of ASME XI, therefore, plant and component design and layout for inspection coverage required by ASME Section XI Code in many cases, is not sufficient to permit satisfying the current code requirements. Inspection limitations are primarily due to obstructions and configuration interference.

Summary of the limited examinations are described below and also included in Table 1 attached.

Part A: **Category B-A,** "Pressure Retaining Welds in Reactor Vessel"

Reactor Vessel Bottom Head Dollar Pl LS Weld W-2: Examination is limited to 35.10% coverage due to Control Rod Drive mechanisms at 13" and 2". (See Figure 1.)

Part B: **Category B-D**, "Full Penetration Welds of Nozzles in Vessels"

Reactor Vessel Nozzle N-3B NV: Coverage for nozzle/vessel weld is 61.27% inspection limited due to nozzle configuration. (See Figure 2).

Reactor Vessel Nozzle N-4D NV: Coverage for nozzle/vessel weld is 61.27% . Inspection limited due to nozzle . (See Figure 3)

Part C: **Category B-J**, "Pressure Retaining Welds in Piping".

RHR Return B weld W-22: Volumetric examination limited to 50% . Limitation due to flange and weldolet configuration. (See Figure 4).

RHR Return B weld W-21: Volumetric examination limited to 71.50%. Limitation due to configuration of pipe to weldolet. (See Figure 5).

Recirculation Loop B W-5 LS U&D: Volumetric examination limited to 39.37%. Limitation due to pipe to branch configuration. (See Figure 6).

Table 1.

Code Category / Item #		System	ISO	Component	Method	%Coverage	Limitation
B-A	B1.22	Reactor Vessel	ISI Fig. 3	W-2	Volumetric	35.16%	Figure 1
B-D	B3.90	Reactor Vessel	ISI Fig. 5	N-3-B NV	Volumetric	61.27%	Figure 2
B-D	B3.90	Reactor Vessel	ISI Fig. 5	N-4D-NV	Volumetric	61.27%	Figure 3
B-J	B9.11	RHR Return B	ISI-97004-A	W-22	Volumetric	50.00%	Figure 4
B-J	B9.31	RHR Return B	ISI-97004-A	W-21	Volumetric	71.5%	Figure 5
B-J	B9.31	Recir. Loop B	ISI-97006-A	W-5 LS U&D	Volumetric	39.37%	Figure 6

Additional Means of Establishing Integrity:

In addition, hydrostatic tests are performed during regular inspection intervals to ensure the piping system is capable of maintaining pressure integrity. System integrity is monitored continuously during normal operation by routine operator rounds during shift and remote monitoring methods, e.g., containment radiation monitoring, containment air monitoring, containment leakage detection and monitoring, containment temperature monitoring, etc.

Alternate Examination:

The nature of the limitations have been noted on the ISI examination reports and are included in the ISI Outage Summary Report. NSP will continue to document the limitations.

All in-service inspection at Monticello has been done to the greatest extent practical. When limitations to required inspections are encountered Materials &Special Process procedure ISI-LTS-1 is applied, which requires alternative examination techniques to be considered, or applied to gain the maximum obtainable inspection coverage practical. In all of the above items identified this procedure was used and the maximum inspection coverage was achieved.

FIGURE 1

Reactor Vessel Bottom Head Dollar Pl LS Weld W-2:

Examination is limited to 35.10% coverage due to Control Rod Drive mechanisms at 13" and 2".

Limitation Sketch: Examination Report : 2000U066 Procedure: ISI-UT-3A

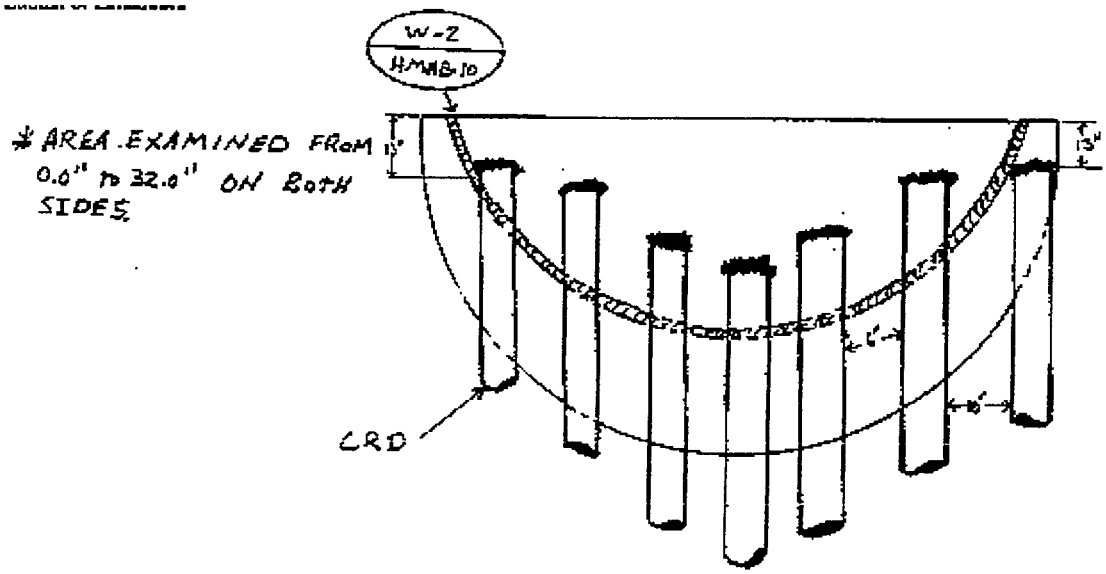

FIGURE 2

Reactor Vessel Nozzle N-3B NV

Coverage for nozzle/vessel weld is 61.27% Inspection limited due to nozzle configuration.

Limitation Sketch: Examination Report : 2000U031 Procedure: ISI-UT-3A

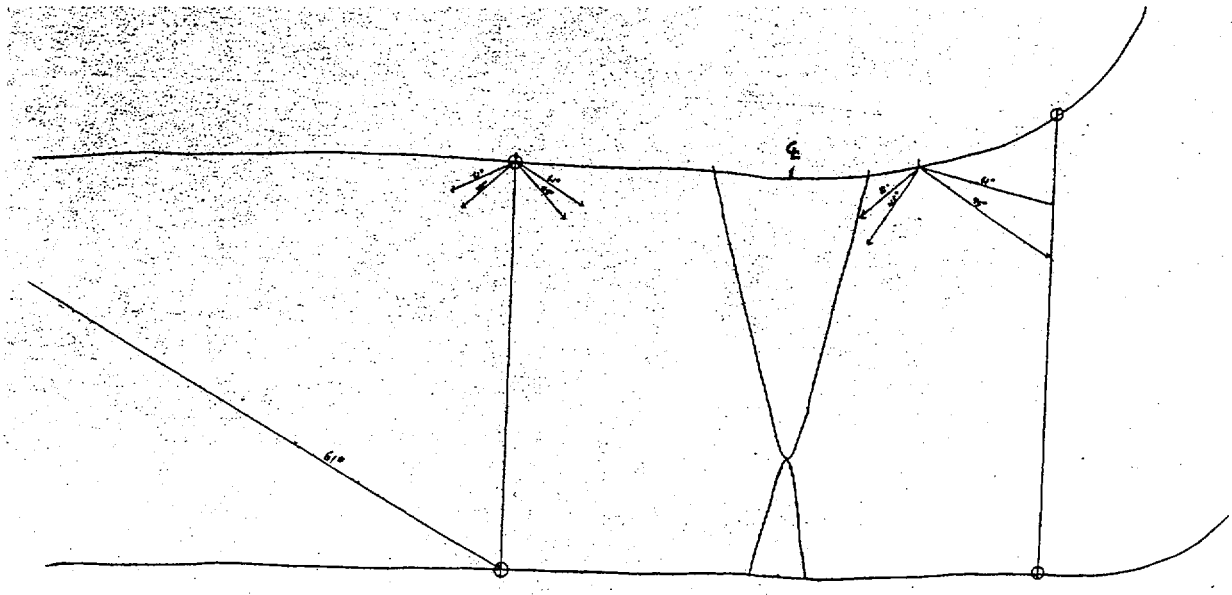

FIGURE 3

Reactor Vessel Nozzle N-4D NV

Coverage for nozzle/vessel weld is 61.27% . Inspection limited due to nozzle configuration.

Limitation Sketch: Examination Report : 2000U016 Procedure: ISI-UT-3A

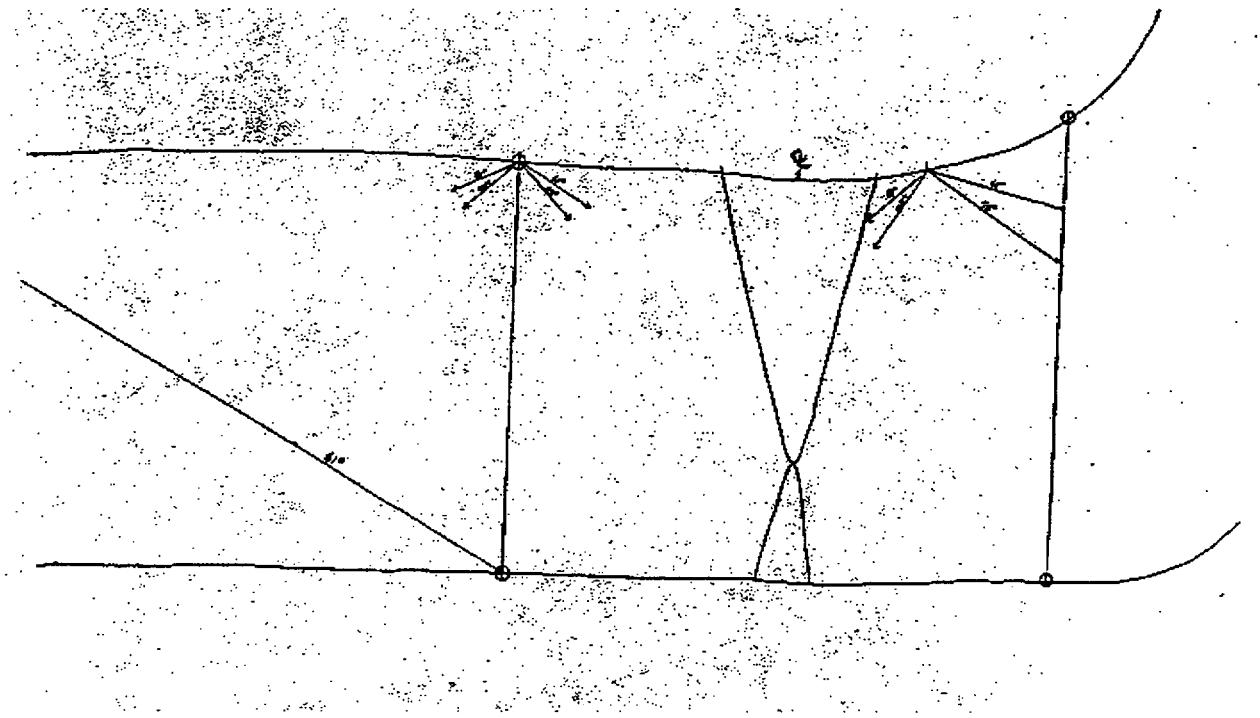

FIGURE 4

RHR Return B Weld W-22

Volumetric examination limited to 50% . Limitation due to flange and weldolet configuration.

Limitation Sketch: Examination Report : 2000U064 Procedure: ISI-UT-1

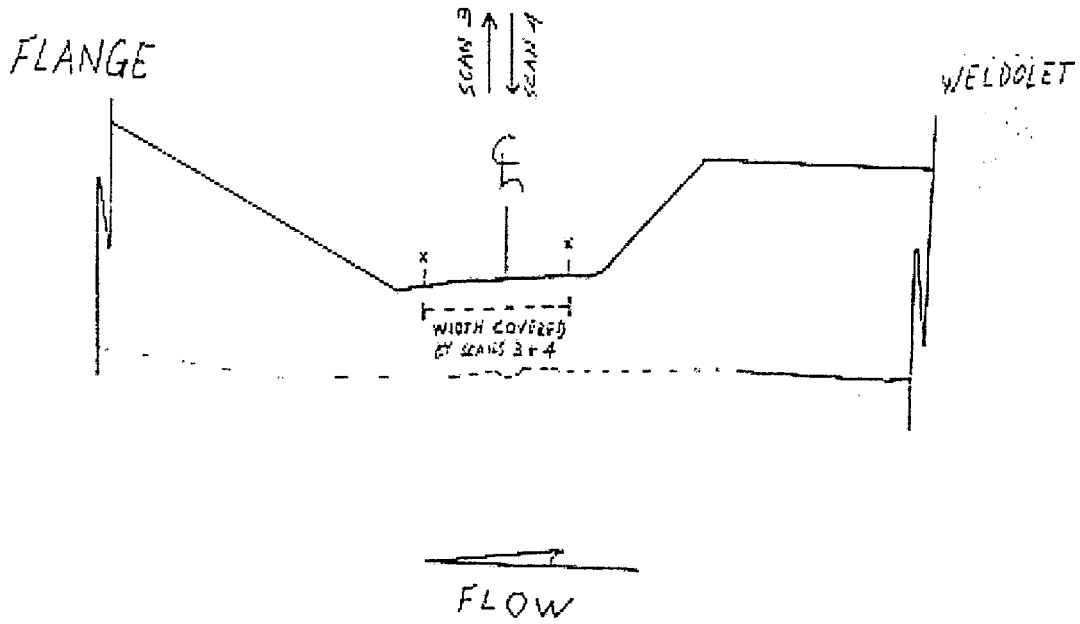

FIGURE 5

RHR Return B weld W-21

Volumetric examination limited to 71.50%. Limitation due to configuration of pipe to weldolet.

Limitation Sketch: Examination Report : 2000U065 Procedure: ISI-UT-1

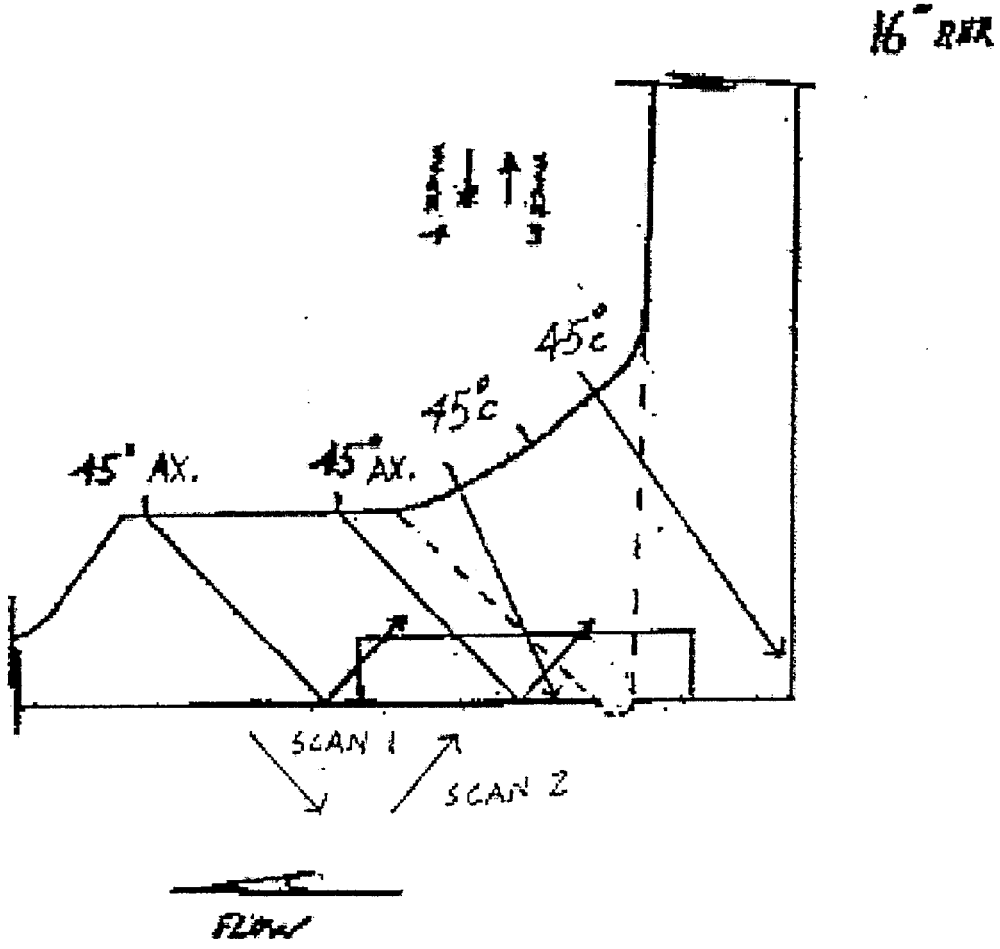

Figure 6

Recirculation Loop B W-5 LS U&D

Volumetric examination limited to 39.37%.Limitation due to pipe to branch configuration.

Limitation Sketch: Examination Report : 2000U092 Procedure: ISI-UT-16

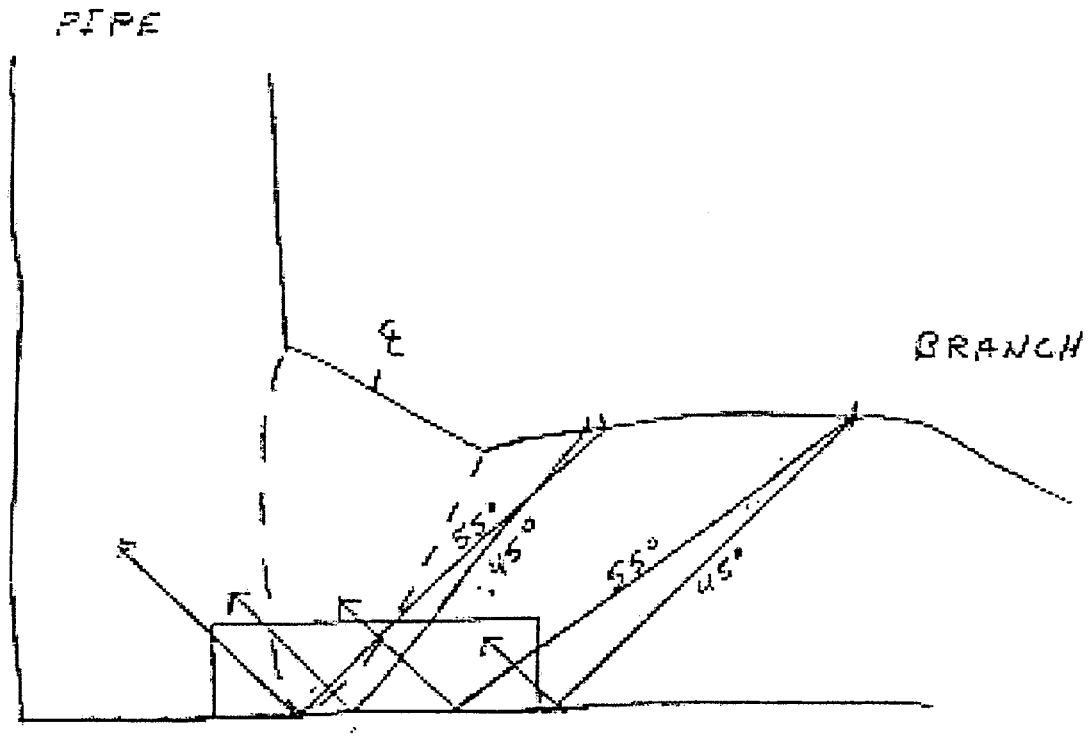

Status:

Approved October 25,2000. NRC Ltr. "Evaluation of Relief Request No. 11 for the Third 10-Year Interval Inservice Inspection Program (TAC N. MA9114)

ISI Relief Request No. 12
Reactor Vessel Circumferential Shell Welds

SYSTEM: Reactor Vessel **Class: 1**
Category: B-A **Item: B 1.11**

RV Circumferential Welds: VCBB-4, VCBB-3 and VCBB-2

Examination Requirements:

A September 8, 1992 revision to 10 CFR 50.55a(g)(6)(ii)(A) contains an augmented examination requirement to perform a one time volumetric examination of essentially 100% (>90%) of all circumferential and axial reactor pressure vessel (RPV) shell assembly welds. This rule revokes previously granted relief requests regarding the extent of volumetric examination on circumferential (B1.11) and longitudinal (B1.12) reactor pressure shell vessel welds. 10 CFR 50.55a(g)(6)(ii)(A) requires the augmented examinations to be performed as specified in the ASME Code Section XI (1989 Edition).

Monticello requests relief from the inspection of Reactor Vessel Circumferential (B-A) Welds Item B1.11 for the third interval inspections and for the remaining term of the current license for Monticello.

Basis For Relief:

Monticello reactor vessel circumferential welds were not inspected to the essentially 100% volumetric requirements during the first and second ISI inspection intervals. A relief request (RR-01) was granted on the basis of inadequate accessibility and unnecessary radiation exposure during the first two 10 year inspection intervals. Upon submittal of the third interval ISI inspection plan, Rev. 1 (July 29, 1993), continuance for the first and second interval relief request (RR-01) was requested. This relief request (RR-01) was denied on the basis of 10 CFR 50.55a(g)(6)(ii)(A), effective September 8, 1992, requiring augmented examination for reactor vessel shell assembly welds.

On November 10, 1998, the NRC issued Generic Letter 98-05 "BOILING WATER REACTOR LICENSEES USE OF BWRVIP-05 REPORT TO REQUEST RELIEF FROM AUGMENTED EXAMINATION REQUIREMENTS ON REACTOR PRESSURE VESSEL CIRCUMFERENTIAL WELDS." This generic letter permits licensees to request permanent relief from the inservice inspection requirements of 10 CFR 50.55a(g)(6) for the volumetric examination of circumferential reactor pressure vessel welds if it can be demonstrated that: (1) at the expiration of the license, the circumferential welds will continue to satisfy the limiting conditional failure probability for circumferential welds in the staff's July 28, 1998, safety evaluation, and (2) operator training and procedures limit the frequency of cold over-pressure events to the amount specified in the staff's

July 28, 1998, safety evaluation (Ref. 1). The following is our evaluation of these two criteria.

(1) Limiting Conditional Failure Probability

The values established in Attachment 1 were calculated in accordance with the guidelines of Regulatory Guide 1.99, Revision 2. The chemistry factor for the limiting circumferential weld recorded in Attachment 1 is Monticello (manufactured by CB&I) plant specific (reference 3). This value is slightly higher than the USNRC's value which utilizes Table 1 of Regulatory Guide 1.99, Revision 2. As a result, the Monticello mean RT_{NDT} value of 46.9 ° F is slightly higher than the USNRC's limiting plant specific analysis mean RT_{NDT} value of 44.5 ° F listed in reference 5 for the CB&I reference case. A recent safety evaluation (reference 6) identified a Brunswick Unit 1 (manufactured by CB&I) mean RT_{NDT} value of 46.5 ° F which also exceeded the corresponding CB&I mean RT_{NDT} value specified in reference 5. To validate the acceptability of the failure probability in this case, the staff performed calculations using the Brunswick Unit 1 value of 46.5 ° F. The calculations showed only a small increase in failure probability (6 x 10^{-7}/yr for Brunswick vs 2 x 10^{-7}/yr for the reference case). Since the Monticello mean RT_{NDT} is only slightly higher than the Brunswick Unit 1 mean RT_{NDT} (46.9 ° F vs 46.5 °F), it is expected that only a small increase in failure probability will result for Monticello.

The overall limiting conditional failure probability for circumferential welds across the BWR fleet listed in reference 5 is 8.17 x 10^{-5}/yr (calculated by the staff for the B&W reference case). This limiting conditional failure probability is based on reactor vessel data that produced a calculated mean RT_{NDT} of 99.8 ° F (reference 5). Since the Monticello mean RT_{NDT} (46.9 ° F) is less than 99.8 ° F, it follows that the Monticello conditional failure probability will also be less than the limiting failure probability listed in reference 5. Attachment 2 provides a plot of mean RT_{NDT} against failure probability using results documented in references 5 and 6. Based on this trend, the conditional failure probability for Monticello is estimated to be less than 1 x 10^{-6}/yr.

In conclusion, the above discussion demonstrates that the circumferential welds of the Monticello RPV will continue to satisfy the limiting conditional failure probability listed in reference 5.

(2) Training and Procedures

The cold pressurization events considered in reference 1 (i.e., inadvertent injections, condensate injection, CRD injection, loss of RWCU, actual event) were reviewed to identify the critical operator actions that were assumed to occur to mitigate these events. Procedures and training were reviewed to ensure that those critical operator actions would occur with a high degree of certainty so that the low temperature over pressurization (LTOP) event frequency is maintained less than the amount specified in reference 1 (i.e., 1×10^{-3}/yr). System design was also considered in this review to assure that the associated systems function as described in reference 1. Results of our review indicate that in general, procedures, training and system design ensure that the evaluations contained in reference 1 are valid for Monticello. Following are the detailed results of our review:

1. Inadvertent Injections.

   The evaluation provided in reference 1 (paragraph 2.6.1.1) is applicable to Monticello with one exception. The evaluation considered the availability of automatic trips of high pressure injection systems on high water level. Review of Monticello procedures identified that during performance of reactor feedwater pump (RFP) testing during cold shutdown, the high reactor water level trip is bypassed. Measures are taken procedurally to close valves that prevent water from getting to the vessel. *Monticello commits to enhance this procedure to further assure the isolation of flow to the vessel.*

2. Condensate Injection.

   The evaluation provided in reference 1, (paragraph 2.6.1.2) is applicable to Monticello. Operating procedures provide precautions which indicate that reactor water level is to be closely monitored when starting a condensate pump. This aids in assuring that an overfill event which could lead to an LTOP event does not occur. In order to assure that operations personnel understand that an overfill event has the potential to lead to an LTOP event, *Monticello commits to enhance condensate system operating procedures to identify an LTOP event as a potential consequence of an overfill event.* Monticello also has high reactor water level and high reactor pressure alarms in the control room that warn operators when high level/pressure limitations are being exceeded which provides further assurance that an LTOP event will not occur due to condensate injection. .

3. CRD Injection.

The evaluation provided in reference 1, (paragraph 2.6.1.3), is applicable to Monticello. The evaluation notes that the risk of cold over pressurization due to CRD injection may be higher if a loss of station power were to occur during reactor vessel pressure testing. *Monticello commits to revise vessel pressure testing procedures to provide precautions that ensure proper response to a loss of station power (i.e., RWCU and Recirculation pumps are restored along with restoration of CRD).*

4. Loss of RWCU

The evaluation provided in reference 1, (paragraph 2.6.1.4), is applicable to Monticello. Monticello has procedures in place to provide guidance for recovery measures following a scram. In the event that a scram occurs that results in a RWCU isolation, procedural guidance is provided which consists of restoring the RWCU system as soon as the cause of the isolation is identified and resetting the reactor scram as soon as possible in order to limit cold water injection into the vessel. Also, procedural guidance is provided for dealing with recirculation loop or vessel stratification so that an excessive amount of cold water is not distributed throughout the reactor vessel during the restart of a tripped recirculation pump(s). *Monticello commits to add a precaution in the RWCU restoration procedure in order to further inform the operations personnel of the potential of an LTOP event occurring during SCRAM recovery.*

5. Actual Event.

General Electric issued RICSIL No. 049, Inadvertent Vessel Pressurization, in response to the actual event discussed in reference 1, (paragraph 2.6.1.5). Our assessment of the RICSIL indicated that the likelihood of a similar event occurring at Monticello is very low. Procedures require that the reactor vessel remain vented at all times during cold shutdown except as permitted by approved procedures. The reactor vessel pressure test procedure allows the vent valves to be closed during cold shutdown. During the pressure test, strict procedural guidance is provided for administratively monitoring vessel pressure and temperature while controlling CRD injection and RWCU reject in order to assure a smooth, controlled method of increasing or decreasing pressure while vessel temperature is being maintained above the required P-T limits. If reactor pressure exceeds the specified limits, during the test, the CRD pump is immediately tripped. In addition to the above mentioned procedural guidance, a requirement is included to perform an "Infrequent Test or Evolution Briefing" with all essential personnel. This briefing details the anticipated testing evolution with special emphasis on conservative decision making, plant safety awareness, lessons learned from similar in-house or industry operating experiences, the importance of open communications, and the process in which the test would be aborted if plant systems responded in an adverse manner.

The above evaluations show that system design and procedures, including the proposed enhancements, minimize the probability of LTOP events at Monticello. Our review of training indicated that licensed operator training addresses LTOP events. Initial licensed operator simulator training, for example, includes performance of surveillance tests which ensure pressure-temperature curve compliance during plant heatup and cooldown. *Additionally Monticello commits to provide training on the specific scenarios and events evaluated in reference 1, (paragraph 2.6.1.1-5), including the features of system design and procedural controls that prevent such events at Monticello.*

Conclusion:

The Monticello mean RT_{NDT} value of 46.9 ° F is less than the mean RT_{NDT} value of 99.8 °F corresponding to the B&W limiting reference case. Since the Monticello RT_{NDT} is much less than the limiting RT_{NDT}, the Monticello conditional failure probability will be well below the limiting conditional failure probability of 8.17×10^{-5}/yr calculated by the staff for the corresponding B&W reference case.

A thorough review of existing procedures, operator training and system design identified improvement opportunities that Monticello has committed to implement. With the recommended enhancements to existing procedures and operator training and with the current design capabilities of the associated systems, the LTOP event frequency is limited to the amount specified in reference 1, (1×10^{-3}/yr).

Based on these evaluations the conditions for requesting relief from the inservice inspection requirements of 10 CFR 50.55a(g)(6)(ii)(A), for the volumetric examination of circumferential reactor pressure vessel welds in accordance with ASME Code Section XI (1989 Edition), Table IWB-2500-1, Examination Category B-A, Item B1.11, Circumferential Welds are satisfied. Relief is hereby requested in accordance with 10 CFR 50.55a(a)(3)(I). The proposed alternative examinations provide an adequate level of quality and safety.

Alternate Examination:

As an alternative to the inspection requirements of ASME Code Section XI (1986) Category B-A, Item B.1.11, 100% volume requirement, we propose that the following examination methodology be used. The alternative examination requested maintains essentially 100% (>90%) examination of reactor vessel longitudinal (axial) shell welds, Code Category B-A, Item B.1.12. Two to three percent of the circumferential RPV shell welds Code Category B-A, Item B1.11, Code Category B-A, Item B1.11 will be inspected at the intersections of the axial and circumferential welds. This is consistent with the alternate inspection requirements as specified in GL 98-05. This alternative is capable of detecting weld degradation sufficient to insure the integrity of the reactor pressure vessel boundary, and is the same as that described in the NRC SER (Ref. 1).

Time Period Relief is Requested For:

Relief is requested for the third 10 year interval and for the remaining term of the current Monticello license.

References:

1.) NRC Safety Evaluation Report of Topical Report by the Boiling Water Reactor Vessel and Internals Project: "BWR Reactor Pressure Vessel Shell Weld Inspection Recommendations, BWRVIP-5" (TAC No. M93925), July 28, 1998.

2.) General Electric Report SASR 87-61, DRF137-0010, "Revision of Pressure-Temperature Curves to Reflect Improved Beltline Weld Toughness Estimate for the Monticello Nuclear Generating Plant – Rev. 1," December 1987.

3.) NSP Letter to NRC, Submittal of Report on Reactor Pressure Vessel Specimen Test, December 21, 1998.

4.) General Electric Report GENE-B13-01796-1, "Reactor Vessel Fracture Toughness Engineering Evaluation – Task 5.4," March 13, 1996

5.) NRC Safety Evaluation Report of Topical Report by the Boiling Water Reactor Vessel and Internals Project: "Supplement to Final Safety Evaluation of the BWR Vessel and Internals Project BWRVIP-5 Report (TAC No. MA3395)," March 7, 2000.

6.) Brunswick Steam Electric Plant, Unit No's 1 and 2 – Safety Evaluation for Proposed Alternative in Accordance with 10 CFR 50.55a(a)(a)(i) for Reactor Vessel Circumferential Shell Weld Examinations (TAC No's MA9299 and MA9300).

ATTACHMENT 1

Comparison of Monticello RPV Parameters to NRC Limited Plant Specific Parameters

Parameter Description	Monticello Parameters for the Bounding Circumferential Weld	USNRC Limiting Plant Specific Analyses Parameters SER Table 2.6-4 (Ref. 5)	
		CB&I	B&W
Cu, wt%	0.10 (Ref. 2)	0.10	0.31
Ni, wt%	0.99 (Ref. 2)	0.99	0.59
CF (Chemistry factor)	138.5 (Ref. 3)	134.9	196.7
EOL ID Fluence, x 10^{19} n/cm^2	0.51 (Ref. 4)	0.51	0.095
ΔRT_{NDT}, °F	112.5	109.5	79.8
RT_{NDT} (u) °F	-65.6 (Ref. 2)	-65	20
Mean RT_{NDT}, °F	46.9	44.5	99.8
Conditional Failure Probability P(FIE)	$<1x10^{-6}$ Attachment 2	$2x10^{-7}$	$8.17x10^{-5}$

ATTACHMENT - 2

Circ. Weld Failure Probability vs Mean RT_{NDT} Trend Using Limiting CE, CB&I, B&W and Brunswick Data

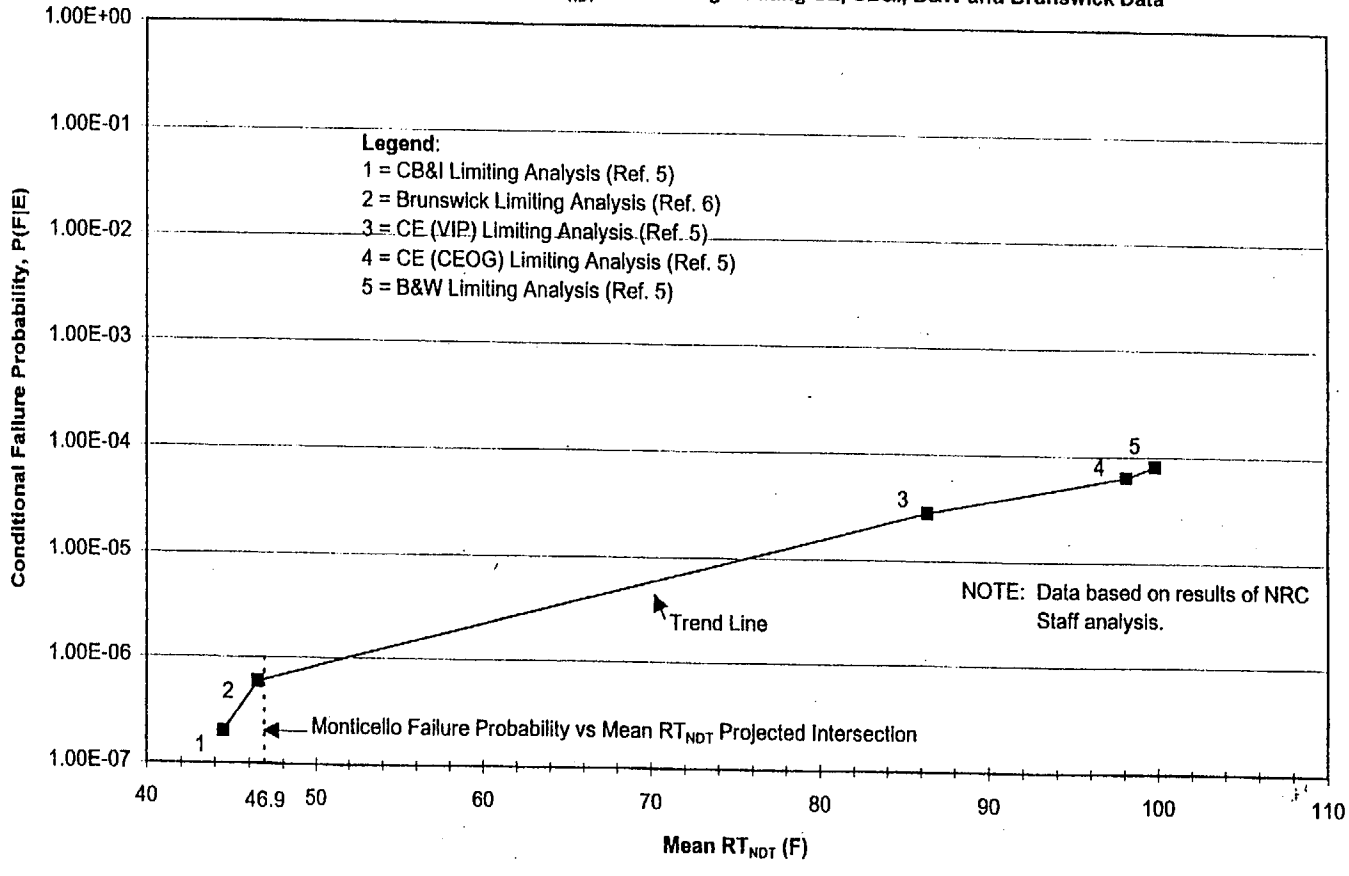

Monticello Unit 1 - Relief Request No. 13 (Rev. 0)

Appendix VIII Supplement 4

SYSTEM/COMPONENT(S) FOR WHICH RELIEF REQUEST WILL BE USED

Code Class:	Class 1
Reference:	ASME, Section XI, Tables IWB-2500-1 (1986 Edition, No Addenda)
Examination Category:	B-A
Item Number:	B1.10, B1.20
Description:	Alternative Requirement to Appendix VIII, Supplement 4 "Qualification Requirements for the Clad/Base Metal Interface of Reactor Vessel"
Component Numbers:	All

CODE REQUIREMENT

10 CFR 50.55a(b)(2) was amended to reference Section XI of the ASME Code through the 1995 Edition with the 1996 Addenda (64 FR 51370). 10 CFR 50.55a provides an implementation schedule for the supplements to Appendix VIII of Section XI (1995 Edition with the 1996 Addenda).

Section XI, 1995 Edition, 1996 Addenda, Appendix VIII, Supplement 4, Subparagraph 3.2(b) requires "flaw lengths estimated by ultrasonics be the true length -¼ inch +1 inch."

As amended, 10 CFR 50.55a(b)(2)(xv)(C)(1) requires a depth sizing acceptance criteria of 0.15 inch root mean square (RMS) be used in lieu of the requirements of Subparagraphs 3.2(a) and 3.2(b) to Supplement 4 to Appendix VIII. Subparagraph 3.2(c) contains additional requirements for statistical parameters.

The final rule for 10 CFR50.55a was published in the Federal Register on September 22,1999 (64FR51370). This was amended by Federal Register Notice (66 FR 16391) dated March 26, 2001, which specified te use of a flaw length sizing criterion for reactor vessel qualification. However, in this notice the statistical parameters of 3.2(c) were not corrected to reflect the use of the RMSE calculations of 3.2(a) and 3.2(b).

This relief request was developed using guidance contained in the draft version of the Electric Power Research Institute (EPRI) Performance Demonstration Initiative (PDI) ASME Section XI, Appendix VIII Implementation Guideline. Since that time, several minor changes to the Implementation Guideline and the associated sample requests for relief have been made. In addition, on October 11,2000, in a public meeting between PDI and NRC, a discrepancy between the PDI program and Subparagraph 3.2(c) of Supplement 4 to Appendix VIII was identified.

Reference 1 provides a precedent relief request submitted by the Duane Arnold Energy Center (DAEC) which was considered in preparation of this submittal. By Reference 2, the NRC approved Reference 1.

Reference 1 and 2 were based on correcting two errors in 10 CFR 50.55a(b)(2)(xv)(C)(1). By Reference 3, the NRCcorrected one of the errors. Our attached relief request still discusses both errors, but requests relief for only the remaining error. This allows for more complete discussion of the closely associated errors. It should also facilitate NRC review and approval since our relief request is nearly an exact duplicate of Reference 1.

BASIS FOR ALTERNATIVE EXAMINATION

10 CFR 50.55a, as amended by Federal Register Notice (64 FR 51370) dated September 22, 1999, requires the implementation of the ASME Code Section XI, Appendix VIII, Supplement 4, 1995 Edition with the 1996 Addenda. The required implementation date for Supplement 4 was November 22, 2000.

10 CFR 50.55a(b)(2)(xv)(C)(1), as amended by Federal Register Notice, (64 FR 51370) dated September 22, 1999, requires that when applying Appendix VIII, Supplement 4, a depth sizing acceptance criterion of 0.15 inch Root Mean Square Error (RMSE) be used in lieu of the requirements of Subparagraph 3.2(a) and 3.2(b) of the 1995 Edition, 1996 Addenda of ASME BPV Code Section XI, Appendix VIII. This depth sizing criterion of 0.15 inch RMS is appropriate to Subparagraph 3.2(a), but is not appropriate to Subparagraph 3.2(b) because Subparagraph 3.2(b) addresses length sizing, not depth sizing.

On January 12, 2000, NRC Staff, representatives from the Electric Power Research Institute (EPRI) Nondestructive Examination Center, and representatives from the Performance Demonstration Initiative (PDI) participated in a conference call. The discussion during the conference call included the difference between Supplement 4, "Qualification Requirements for the Clad/Base Metal Interface of Reactor Vessel," to Appendix VIII, "Performance Demonstration for Ultrasonic Examination Systems," Paragraph 10 CFR 50.55a(b)(2)(xv)(C)(1) in the rule (Federal Register, 64 FR 51370), and the implementation of Supplement 4 by the PDI Program. Supplement 4, Subparagraph 3.2(b) imposed a flaw sizing tolerance of -¼ inch, +1 inch of the true length to the performance demonstration qualification criteria. The rule changed Subparagraph 3.2(b) to a depth sizing requirement of 0.15 inch Root Mean Square (RMS), and the PDI program uses a length sizing tolerance of 0.75 inch RMS for paragraph 3.2(b). The NRC Staff acknowledged that Paragraph 10 CFR 50.55a(b)(2)(xv)(C)(1) in the rule was an error and should actually be a length sizing tolerance of 0.75 inch RMS, the same tolerance that was being implemented by the PDI program.

In a public meeting on October 11, 2000 at NRC offices in White Flint, MD, the PDI identified the discrepancy between Subparagraph 3.2(c) and the PDI program. The

NRC agrees that Paragraph 10 CFR 50.55a(b)(2)(xv)(C)(1) should have excluded Subparagraph 3.2(c) as a requirement.

The U.S. nuclear utilities created the PDI to implement demonstration requirements contained in Appendix VIII. PDI developed a performance demonstration program for qualifying UT techniques. In 1995, the NRC Staff performed an assessment of the PDI program and reported that PDI was using a length sizing tolerance of 0.75 inch RMS for reactor pressure vessel performance demonstrations. This criterion was introduced to reduce testmanship (passing the test based on manipulation of results rather than skill). The Staff noted in the assessment report (dated March 6, 1996) that the length sizing tolerance was not according to Appendix VIII but did not take exception to PDI's implementation of the 0.75 inch RMS length sizing tolerance. The Staff requested that the length sizing difference between PDI and the Code be resolved.

The solution for resolving the differences between the PDI program and the Code was for PDI to participate in the development of a Code case that reflected PDI's program. The Code case was presented to ASME for discussion and consensus building. NRC representatives participated in this process. ASME approved the Code case and published it as Code Case N-622, "Ultrasonic Examination of RPV and Piping, Bolts and Studs, Section XI, Division 1." The NRC approved the use of Code Case N-622 for Florida Power and Light Company's St. Lucie Plant Unit 2 (TAC No. MA5041).

Operating in parallel with the actions of PDI, the Staff incorporated most of Code Case N-622 criteria in the rule published in the Federal Register, 64 FR 51370. Appendix IV to Code Case N-622 contains the proposed alternative sizing criteria which has been authorized by the Staff. The Staff agrees that the omission of the length sizing tolerance of 0.75 inch RMS in the rule and the inclusion of the statistical parameters of Paragraph 3.2(c) of Supplement 4 to Appendix VIII was an oversight. The Staff will correct the error in an upcoming rule.

ALTERNATIVE EXAMINATION

Pursuant to 10 CFR 50.55a(a)(3)(i), relief is requested to use the RMSE calculations of 3.2(a) and 3.2(b) of Supplement 4 of the 1995 Edition 1996 Addenda of ASME Section XI Appendix VIII in lieu of the statistical parameters of Subparagraph 3.2(c). As discussed above and demonstrated by the PDI, this will provide an acceptable level of quality and safety.

IMPLEMENTATION SCHEDULE

This alternative is requested for the third ten-year interval of the Inservice Inspection Program for Monticello.

REFERENCES

1. Duane Arnold Energy Center Letter to US NRC, Inservice Inspection (ISI) Program Revised Relief Requests NDE-R037,NDE-R038,NDE-R039 and NDE-R040, dated November 14,2000.

2. NRC letter to Duane Arnold Energy Center, "Safety Evaluation for Proposed Alternatives to ASME Section XI In-service Inspection Program Related to Length Sizing Qualification Criterion and Training for Ultrasonic Testing Personnel for the Duane Arnold Energy Center(TAC No. MA8914),"Dated January 22,2001.

3. Federal Register, Rules and Regulations , March 26,2001 (66FR16391)

4. NRC Assessment of the PDI Program, Jack R. Strosnider, Chief Materials and Chemical Engineering Branch, to Bruce J. Sheffel, Chairman PDI, March 6, 1996, Table 2, Item 94-005,page 34.

5. Meeting Summary, Teleconference between NRC and representatives from PDI, D.G. Naujock, Metallurgist, NDE & Metallurgy Section, to Edmund J. Sullivan, Chief NDE & Metallurgy Section, Chemical Engineering Branch, Division of Engineering, U.S. NRC, March 6, 2000.

6. NRC Staff letter to MR. T. F. Plunkett, Florida Power and Light Company dated September 23,1999.

Status: Approved NRC LTR August27,2001 (TAC No. MB1833).

QUALITY GROUP CLASSIFICATION DRAWINGS
(ISI BOUNDARY DWGS)

ISO #	REV	SYSTEM/DESCRIPTION
BOUNDARY DRAWINGS		
1.5-1	0	ISI Index Key
1.5-2	2	Main Steam System
1.5-3	2	Feedwater System
1.5-4	1	Reactor Circulation System
1.5-5	3	Reactor Circulation System
1.5-6	2	Residual Heat Removal System Loop A
1.5-7	3	Residual Heat Removal System Loop B
1.5-8	2	HP Coolant Injection System (Steam Side)
1.5-9	2	HP Coolant Injection System (Water Side)
1.5-10	2	RX Core Isolation Cooling (Steam Side)
1.5-11	2	Reactor Core Isolation Cooling (Water Side)
1.5-12	2	Standby Liquid Control System
1.5-13	2	Primary Contain. Atmos. Cont. System
1.5-14	2	Emergency Diesel Gen. Emer. Serv. Water
1.5-15	2	Emergency Diesel Gen. Emer. Serv. Water
1.5-16	2	RHR Service Water
1.5-17	3	Hydraulic Control Unit
1.5-18	2	Cont. Rod Drive System (Scram Discharge Piping)
1.5-19	1	Compressed Air System
1.5-20	2	Condensate Service & Rx Bldg CW
1.5-21	2	RX Water Clean-up & Liquid Radwaste
1.5-22	1	Traversing In-core Probe System
1.5-23	1	Excess - Flow Check Valves
1.5-24	2	Combustible Gas Control, Division I
1.5-25	2	Combustible Gas Control, Division II
1.5-26	1	Primary Containment Sampling Systems
1.5-27	1	Reactor Vessel Instrumentation

ISO #	REV	SYSTEM/DESCRIPTION
CLASS 1 & 2 DRAWINGS		
ISI Fig. 0	2	RX Vessel Interior
ISI Fig. 1	3	RX Vessel Top Head
ISI Fig. 2	3	CRD Location RX Vessel
ISI Fig. 3	3	RX Vessel Bottom Head
ISI Fig. 4	3	Circ. & Long Reactor Vessel Welds
ISI Fig. 5	4	RX Vessel Nozzles
ISI Fig. 6	4	Reactor Vessel Bolting
ISI 13142-17-A	4	RHR "A" Suction
ISI 13142-17-B	4	HPCI Water
ISI-13142-17-C	4	RHR B
ISI-13142-18-A	4	RHR B
ISI-13142-18-B	4	RHR "B" Discharge
ISI-13142-18-C	2	RHR "B" Discharge
ISI-13142-19-A	4	HPCI Steam Side Discharge
ISI-13142-19-B	4	RCIC Steam Discharge
ISI-13142-20-A	4	Core Spray "A" Suction
ISI-13142-20-B	4	Core Spray "B" Suction
ISI-13142-20-C	4	RHR RX Vessel Head Cooling
ISI-13142-26-A	4	Core Spray "B" Discharge
ISI-13142-26-B	4	Core Spray "B" Discharge
ISI-13142-26-C	4	Core Spray "B" Discharge
ISI-13142-26-D	0	Core Spray "B" Discharge
ISI-13142-29-A	1	RX Cooling Water
ISI-13142-31-A	4	Core Spray B
ISI-13142-31-B	4	Core Spray "A" Discharge
ISI-13142-31-C	4	Core Spray "A" Discharge
ISI-13142-31-D	0	Core Spray "A" Discharge
ISI-13142-33-A	4	Main Steam A
ISI-13142-34-A	4	Main Steam B
ISI-13142-35-A	3	Main Steam C
ISI-13142-36-A	4	Main Steam D
ISI-13142-37-A	3	RHR "A" Discharge
ISI-13142-37-B	4	Containment Spray
ISI-13142-37-C	4	RHR "A" Discharge
ISI-13142-37-D	0	Containment Spray (RHR A)
ISI-13142-37-E	0	Containment Spray (RHR A)
ISI-13142-40-A	4	HPCI Water Side Discharge
ISI-13142-40-B	4	HPCI Water Side Discharge
ISI-13142-41-A	4	RCIC Water Suction
ISI-13142-42-A	4	HPCI Steam Side

ISO #	REV	SYSTEM/DESCRIPTION
ISI-13142-43-A	4	RCIC Steam Side
ISI-13142-48-A	4	RHR Service Water
ISI-13142-48-B	4	RHR Service Water
ISI-13142-49-A	3	RHR A
ISI-13142-51-A	4	RHR A
ISI-13142-51-B	4	RHR B
ISI-13142-51-C	0	RHR B
ISI-13142-51-D	0	RHR B
ISI-13142-52-A	3	Feedwater C & D
ISI-13142-53-A	4	Feedwater A & B
ISI-13142-62	3	Fuel Pool Emergency Cooling
ISI-13142-67	3	Fuel Pool Emergency Cooling
ISI-16	3	Jet Pump Instrument Nozzle
ISI-19	3	RX Instrument Nozzles
ISI-47	3	RCIC Pump
ISI-48	4	RHR Pumps
ISI-49	4	Core Spray Pump Supports
ISI-73880-A	3	RWCU
ISI-74209-1-A	4	Recirc. "A" Drain
ISI-74210-1-A	4	Recirc. "B" Drain
ISI-74215-A	4	Standby Liquid Control
ISI-782-A	3	RX Head Vent
ISI-782-A-A	4	RX Head Vent
ISI-786-A	4	Main Steam Condensate Leakoff
ISI-7905-32-A	3	RHR HX "A"
ISI-7905-32-B	3	RHR HX "B"
ISI-821-A	3	RX Bottom Head Drain
ISI-8292-42A	3	HPCI Pumps
ISI-93268-1A	3	CRD Scram Header "A"
ISI-93268-1B	3	CRD Scram Discharge Header
ISI-93268-3A	4	CRD Scram Header "B"
ISI-94966-A	1	Vacuum Relief & CGCS Outlet Div 1
ISI-94966-B	1	Containment Air Purge
ISI-94699-A	1	Combustion Gas Control Outlet Div 2
ISI-94879-A	1	Combustion Gas Control Inlet Div 1&2
ISI-97003-A	3	RHR Return Loop "A"
ISI-97003-B	4	RHR "A"

ISO #	REV	SYSTEM/DESCRIPTION
ISI-97004-A	3	RHR Return Loop "B"
ISI-97005-A	4	Recirc. Loop "A"
ISI-97005-B	3	Recirc. Manifold "A"
ISI-97005-C	3	Recirc. Pump "A" Supports
ISI-97006-A	4	Recirc Loop "B"
ISI-97006-B	3	Recirc. Manifold "B"
ISI-97006-C	4	Recirc. Pump "B" Supports
ISI-97007-A	3	RX Instrument Nozzle N-11B
ISI-97008-A	3	RX Instrument Nozzle N-11A
ISI-97027-A	4	RHR Equalizer
ISI-105531-A	1	Standby Gas Treatment & RX Plenum
ISI-158074-A	1	Torus Hard Pipe Vent
CLASS 3 DRAWINGS		
ND-ISI-100	1	RHR Service Water
ND-ISI-101	1	RHR Service Water
ND-ISI-102	1	RHR Service Water
ND-ISI-103	1	RHR Service Water
ND-ISI-104	1	RHR Service Water
ND-ISI-105	1	RHR Service Water
ND-ISI-106	1	RHR Service Water
ND-ISI-107	1	RHR Service Water
ND-ISI-108	1	RHR Service Water
ND-ISI-109	1	RHR Service Water
ND-ISI-110	1	RHR Service Water
ND-ISI-111	2	RHR Service Water
ND-ISI-123	1	RHR Service Water
ND-ISI-141	1	Combustible Gas Control
ND-ISI-142	1	Combustible Gas Control
ND-ISI-144	1	Combustible Gas Control
ND-ISI-145	1	Combustible Gas Control
NON-CODE AUGMENTED		
NC-ISI-37	4	RCIC Feedwater
NC-ISI-51	1	CRD to RWCU

ISI INDEX KEY

- - - - - - - - - - - - INDICATES NDE REQUIRED

———————— INDICATES NO NDE REQUIRED

1 OR A — ASME CODE CLASS 1

2 OR B — ASME CODE CLASS 2

3 OR C — ASME CODE CLASS 3

ASME SAFETY RELATED COMPONENT BUT CANNOT BE CLASSIFIED UNDER REG. GUIDE 1.26 CRITERIA.

ASME NON SAFETY RELATED

REF:	FILE NO:
NSP (M&SP)– ISI INDEX KEY	ISI
DWN: TJH CHKD:	APPD:
SYSTEM:	
LINE:	
DWG: 1.5–1	REV: 0

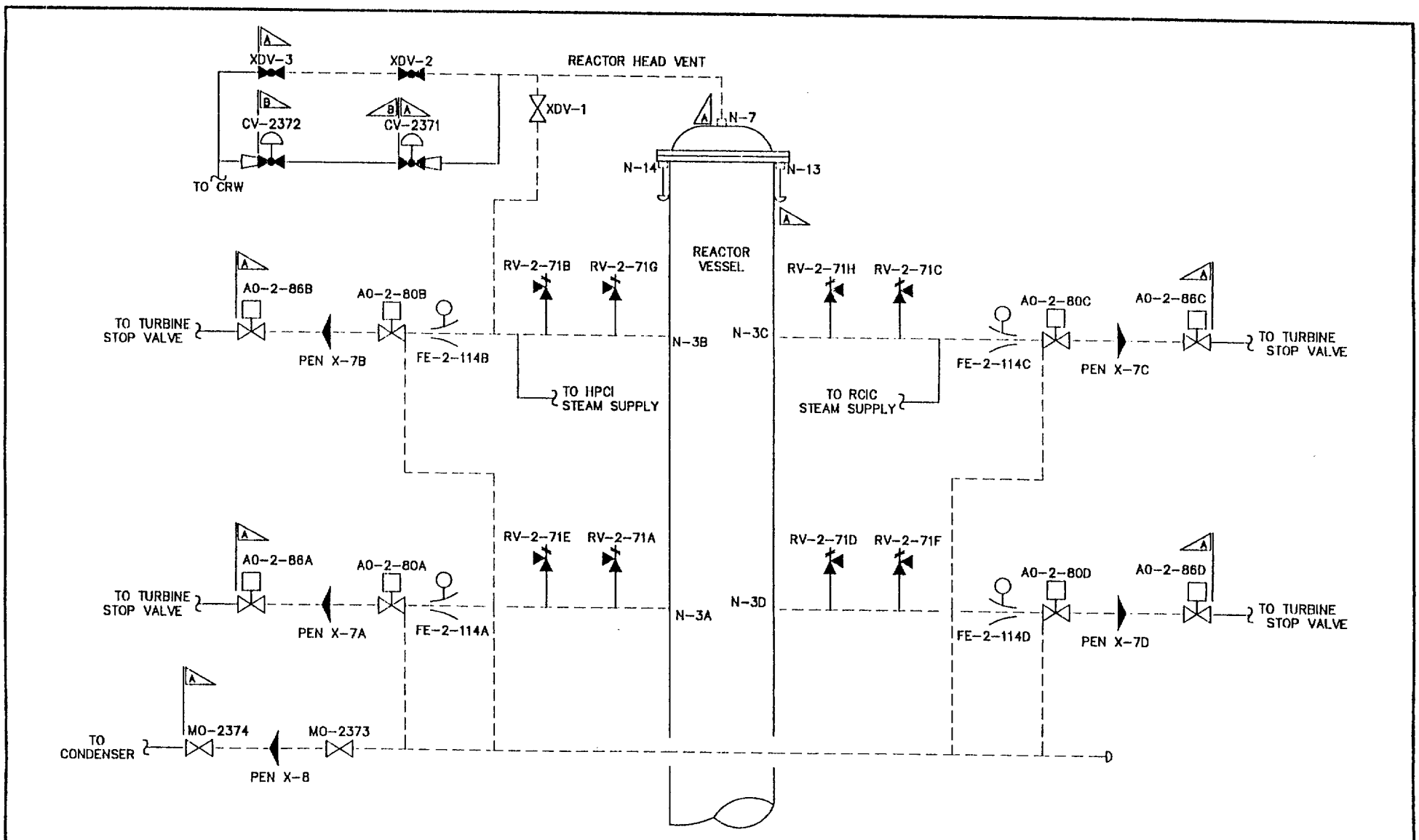

REF: NH-36241	FILE NO: 02
NSP (M&SP)- MONTICELLO	ISI
DWN: TJH CHKD: APPD:	
SYSTEM: MAIN STEAM SYSTEM	
LINE:	
DWG: 1.5-2	REV: 02

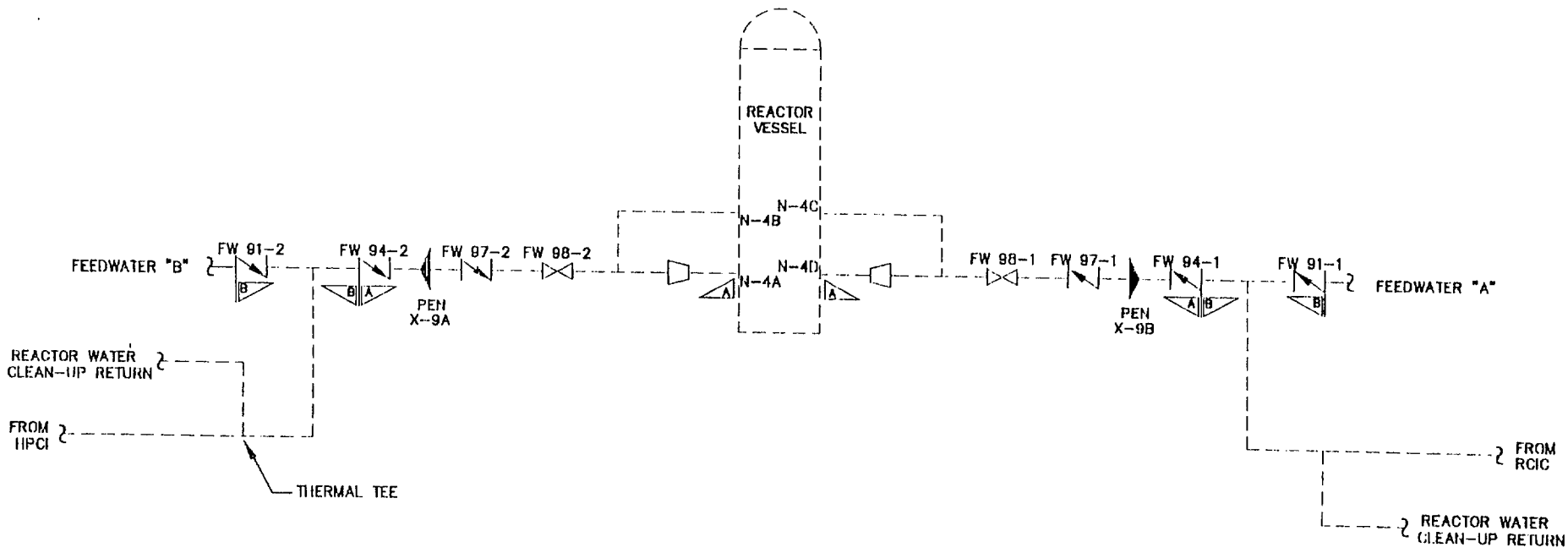

REF: NH-36241

FILE NO:

NSP (M&SP)- MONTICELLO ISI

DWN: TJH CHKD: RAL APPD: DAV

SYSTEM: FEEDWATER SYSTEM

LINE:

DWG: 1.5-3 REV: 02

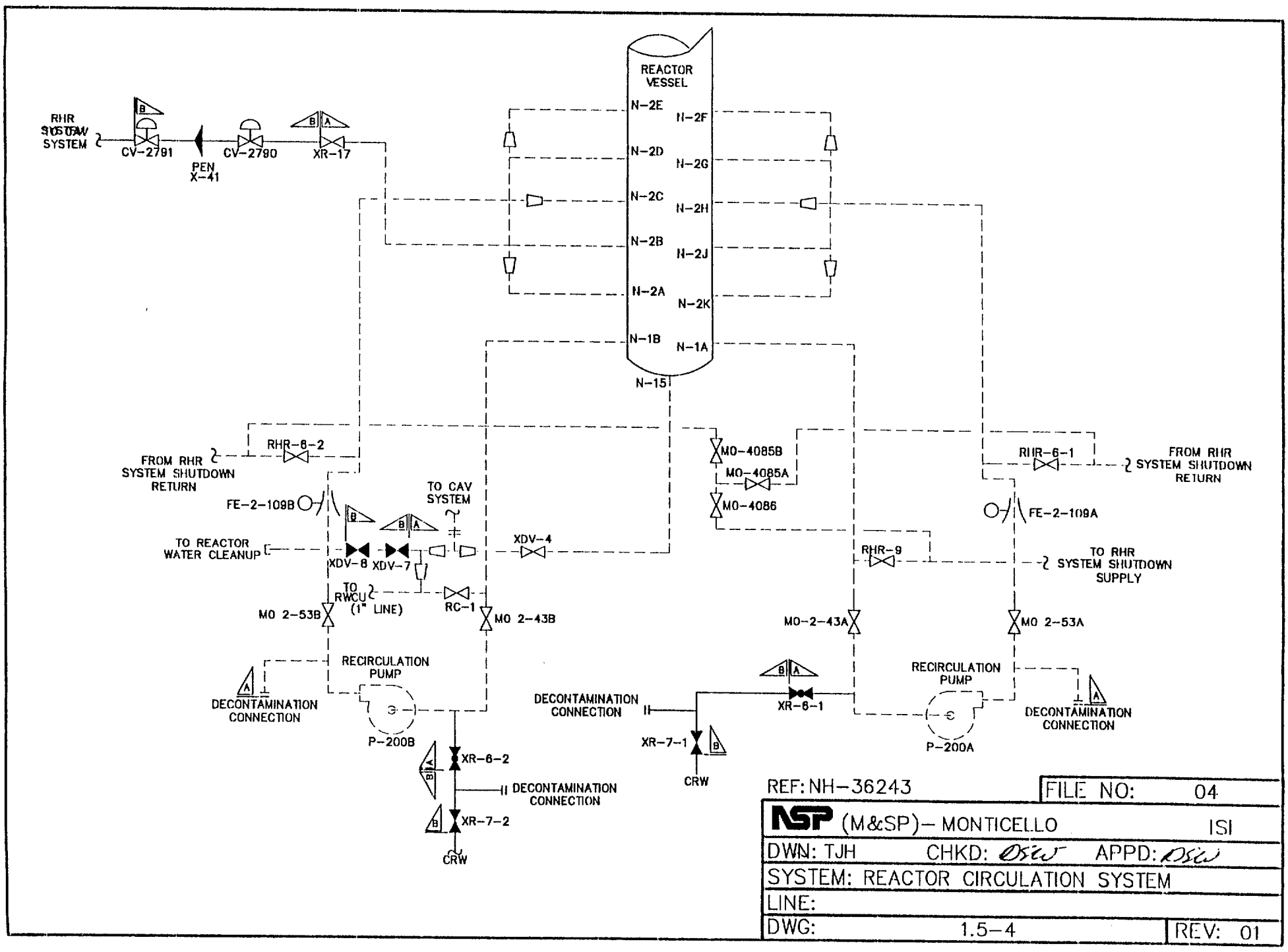

REF: NH-36243 | FILE NO: 04

NSP (M&SP)– MONTICELLO | ISI

DWN: TJH | CHKD: DSW | APPD: DSW

SYSTEM: REACTOR CIRCULATION SYSTEM

LINE:

DWG: 1.5-4 | REV: 01

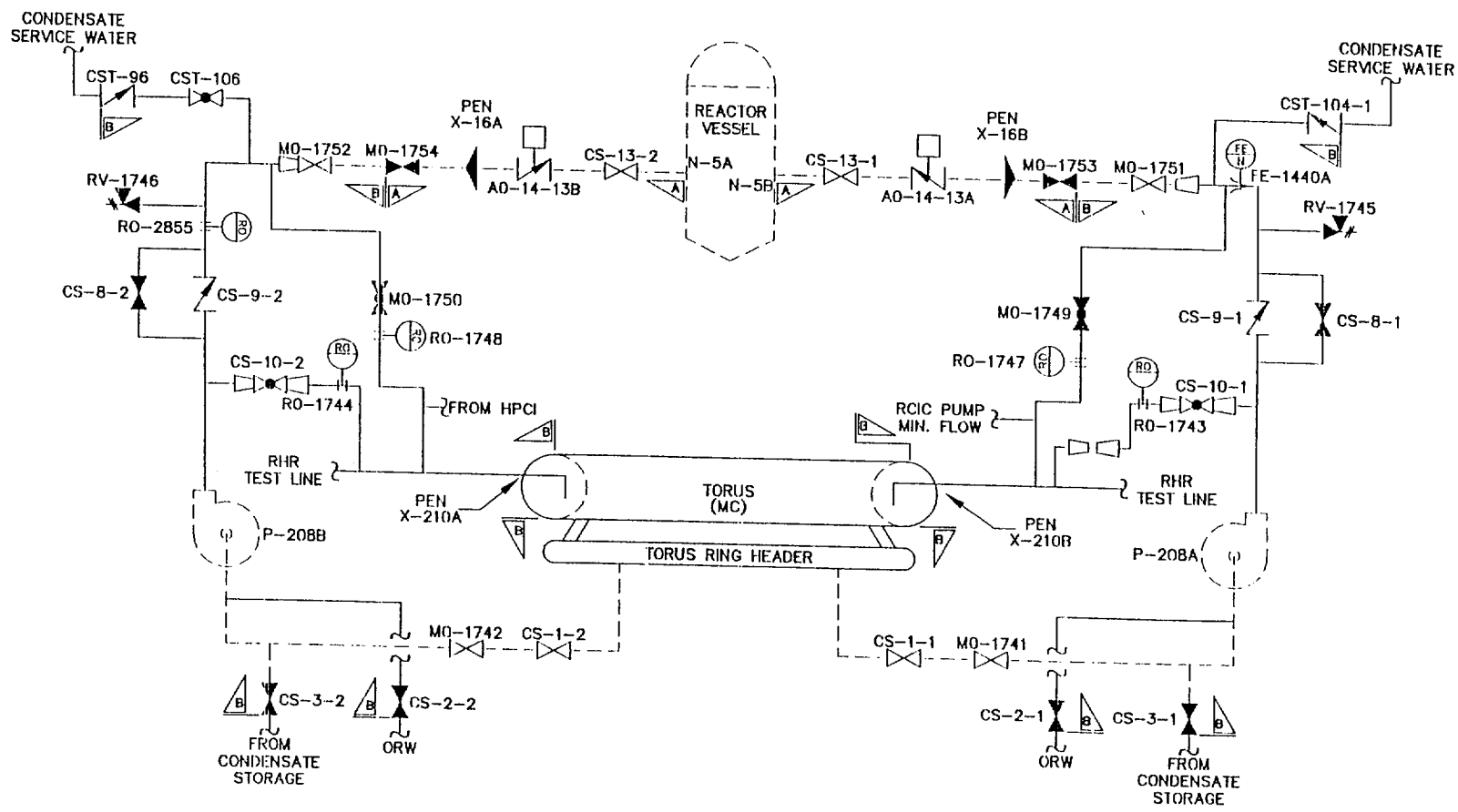

REF: NH-36248

FILE NO:

NSP (M&SP)- MONTICELLO ISI

DWN: TJH CHKD: APPD:

SYSTEM: CORE SPRAY SYSTEM

LINE:

DWG: 1.5-5 REV: 03

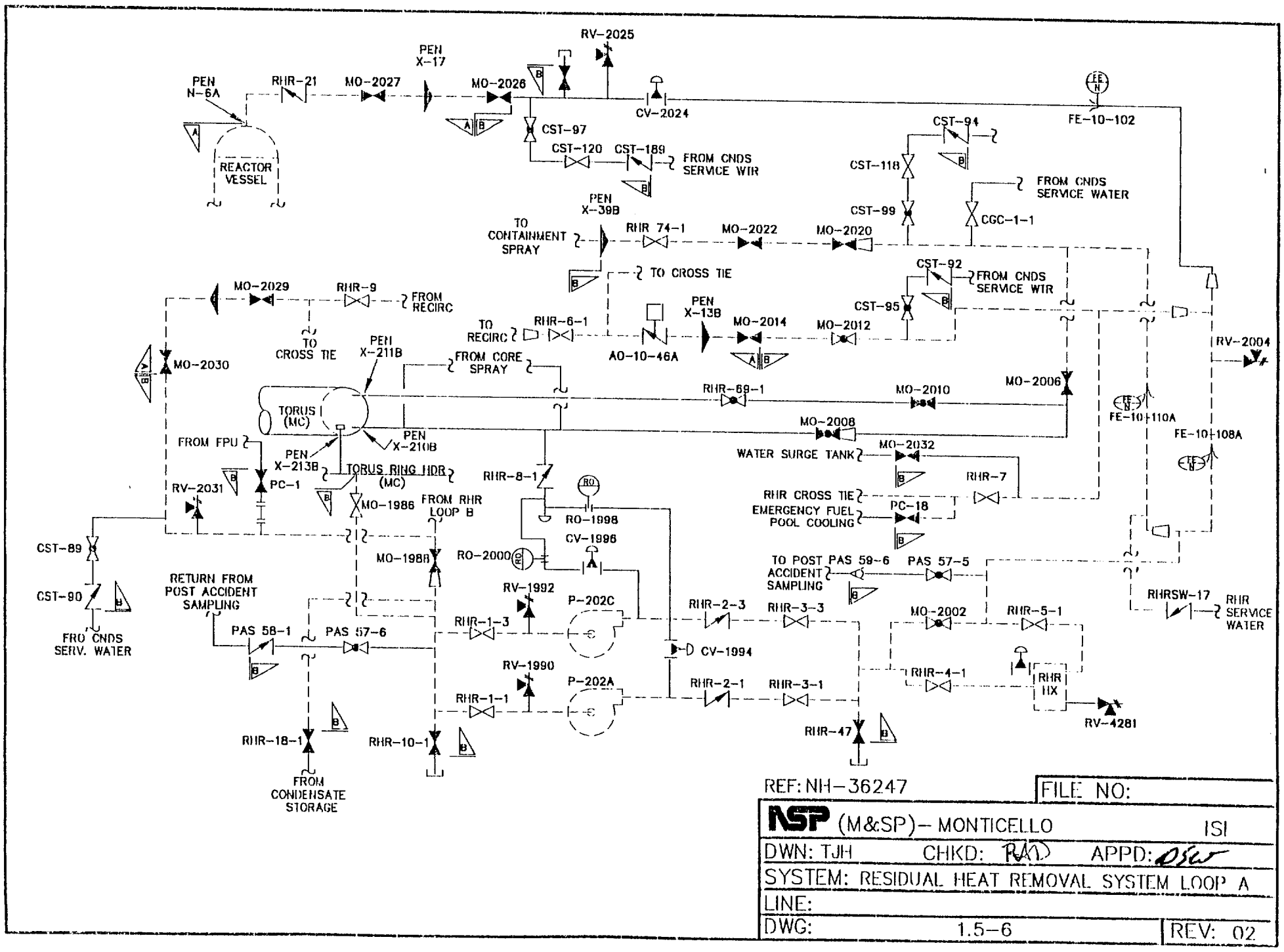

REF: NH-36247

FILE NO:

NSP (M&SP)– MONTICELLO ISI

DWN: TJH CHKD: RAD APPD: DSW

SYSTEM: RESIDUAL HEAT REMOVAL SYSTEM LOOP A

LINE:

DWG: 1.5-6 REV: 02

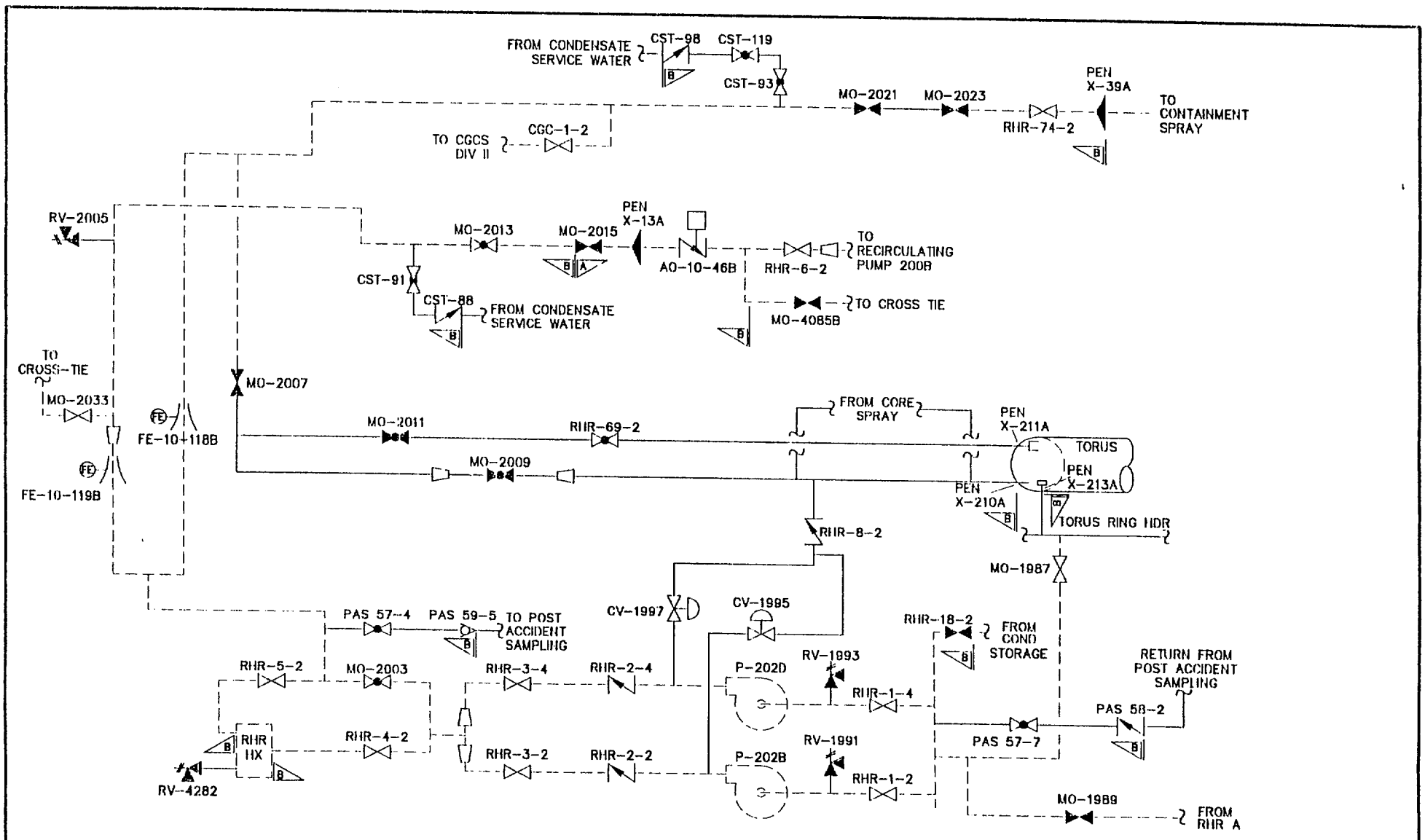

REF: NH-36246

FILE NO:

NSP (M&SP)– MONTICELLO ISI

DWN: TJH CHKD: RAD APPD: DSW

SYSTEM: RESIDUAL HEAT REMOVAL SYSTEM LOOP B

LINE:

DWG: 1.5-7 REV: 03

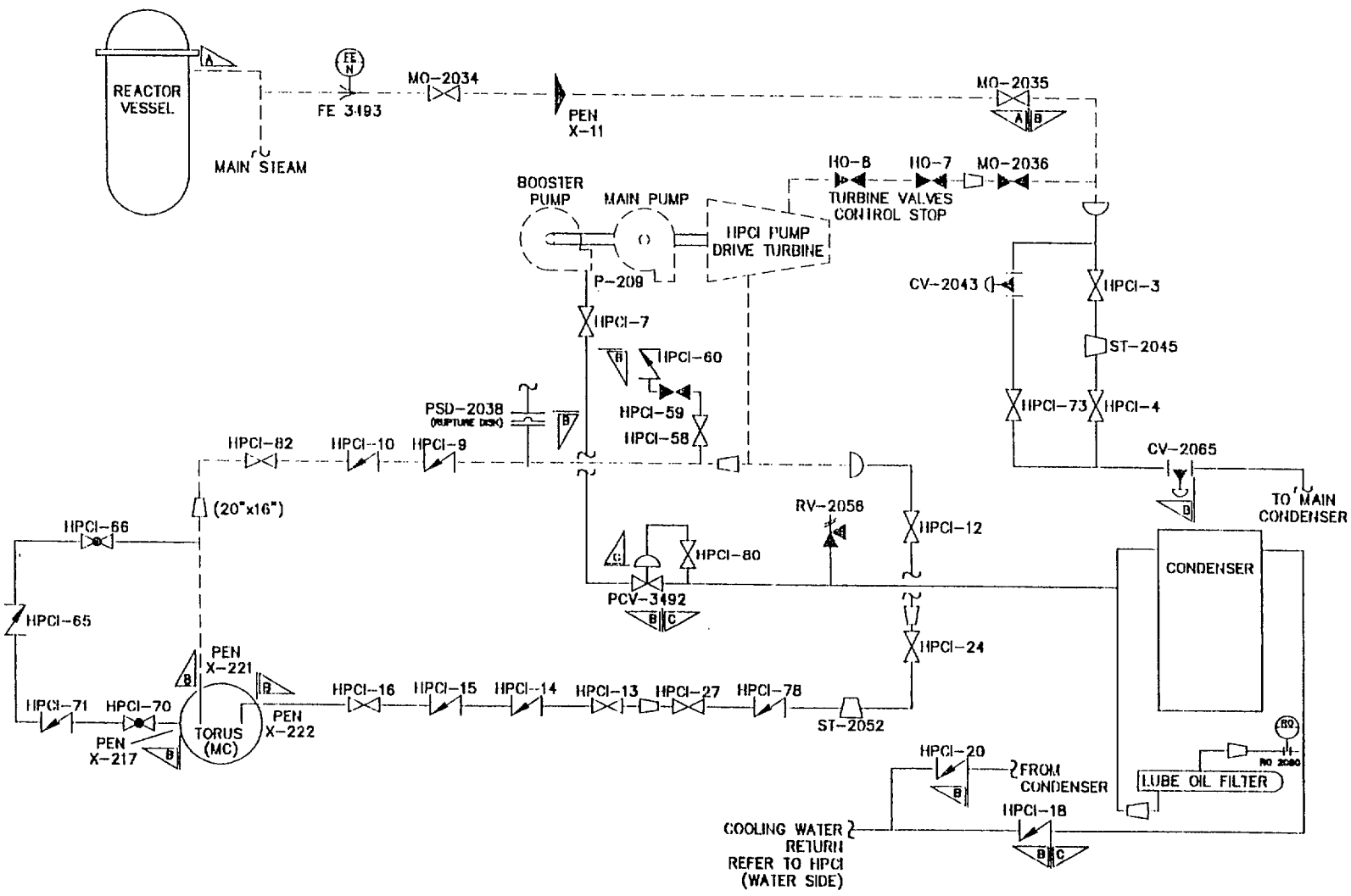

REF: NH-36249

FILE NO:

NSP (M&SP)– MONTICELLO ISI

DWN: TJH CHKD: RJD APPD: DRS

SYSTEM: HP COOLANT INJECTION SYS. (STEAM SIDE)

LINE:

DWG: 1.5-8 REV: 02

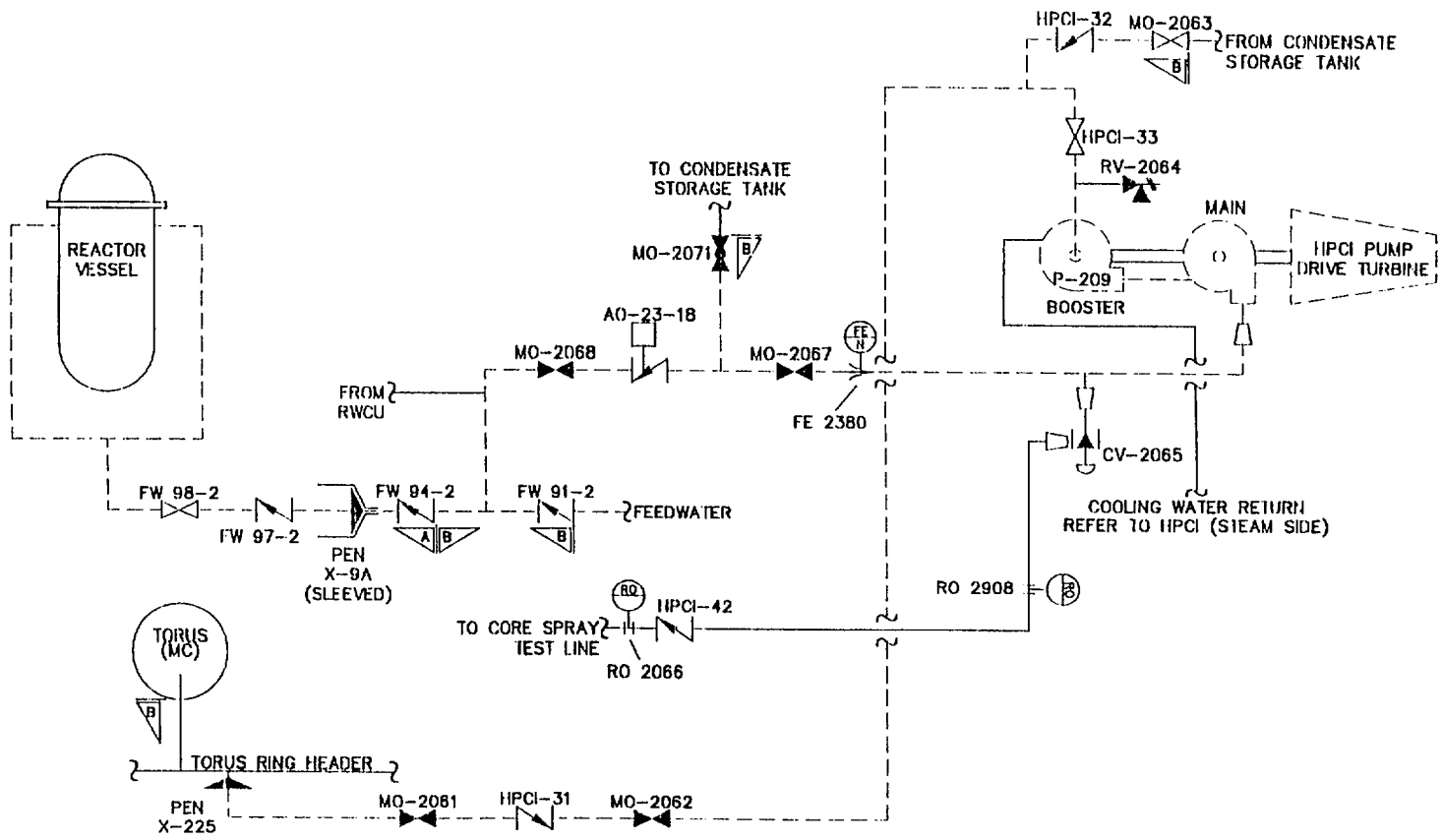

REF: NH-36250 | FILE NO:

NSP (M&SP)- MONTICELLO ISI

DWN: TJH CHKD: RAD APPD:

SYSTEM: HP COOLANT INJECTION SYS. (WATER SIDE)

LINE:

DWG: 1.5-9 REV: 02

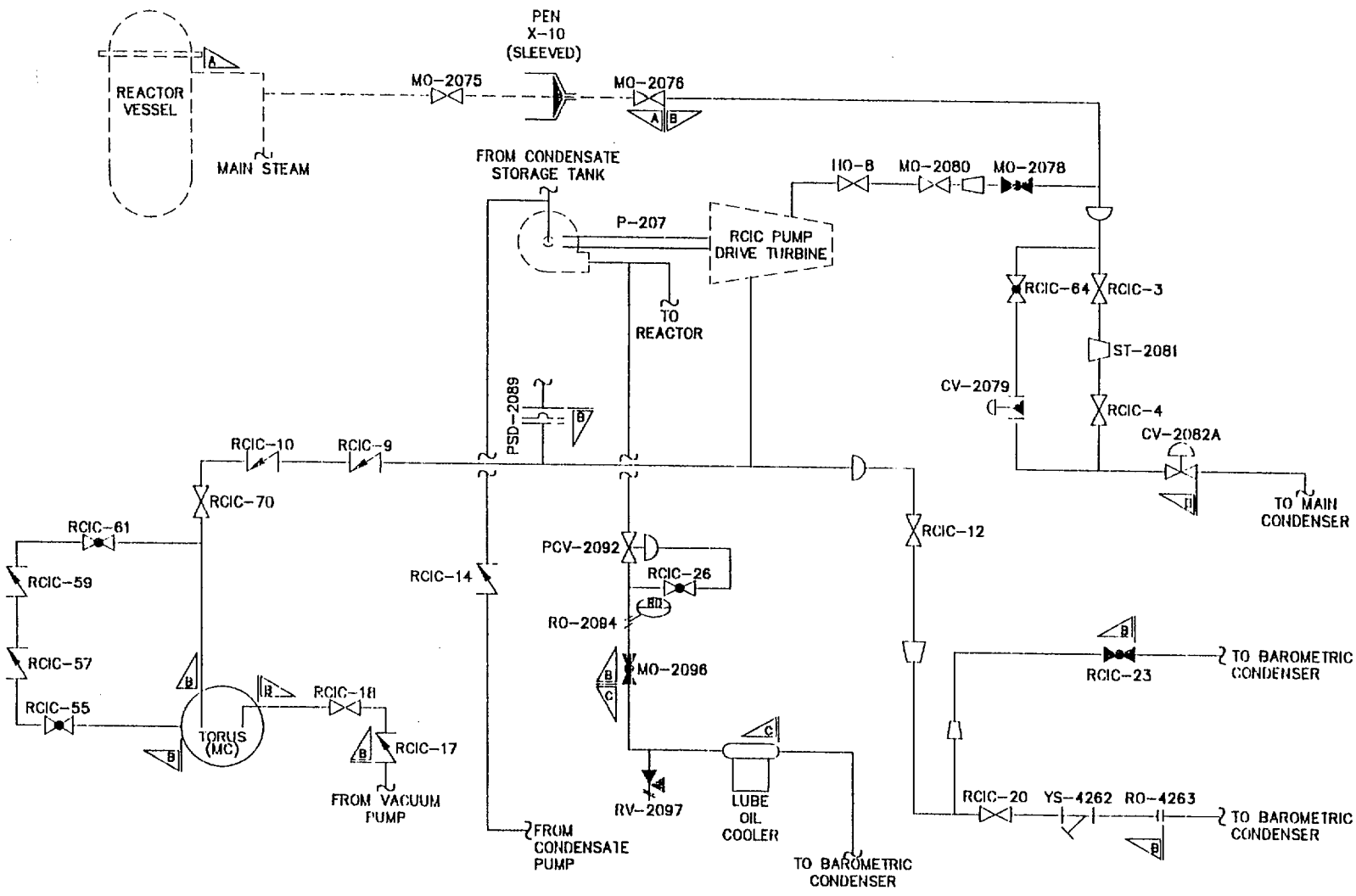

REF: NH-36251 | FILE NO:

NSP (M&SP)- MONTICELLO ISI

DWN: TJH CHKD: RAD APPD: DSW

SYSTEM: RX CORE ISOLATION COOLING (STEAM SIDE)

LINE:

DWG: 1.5-10 REV: 02

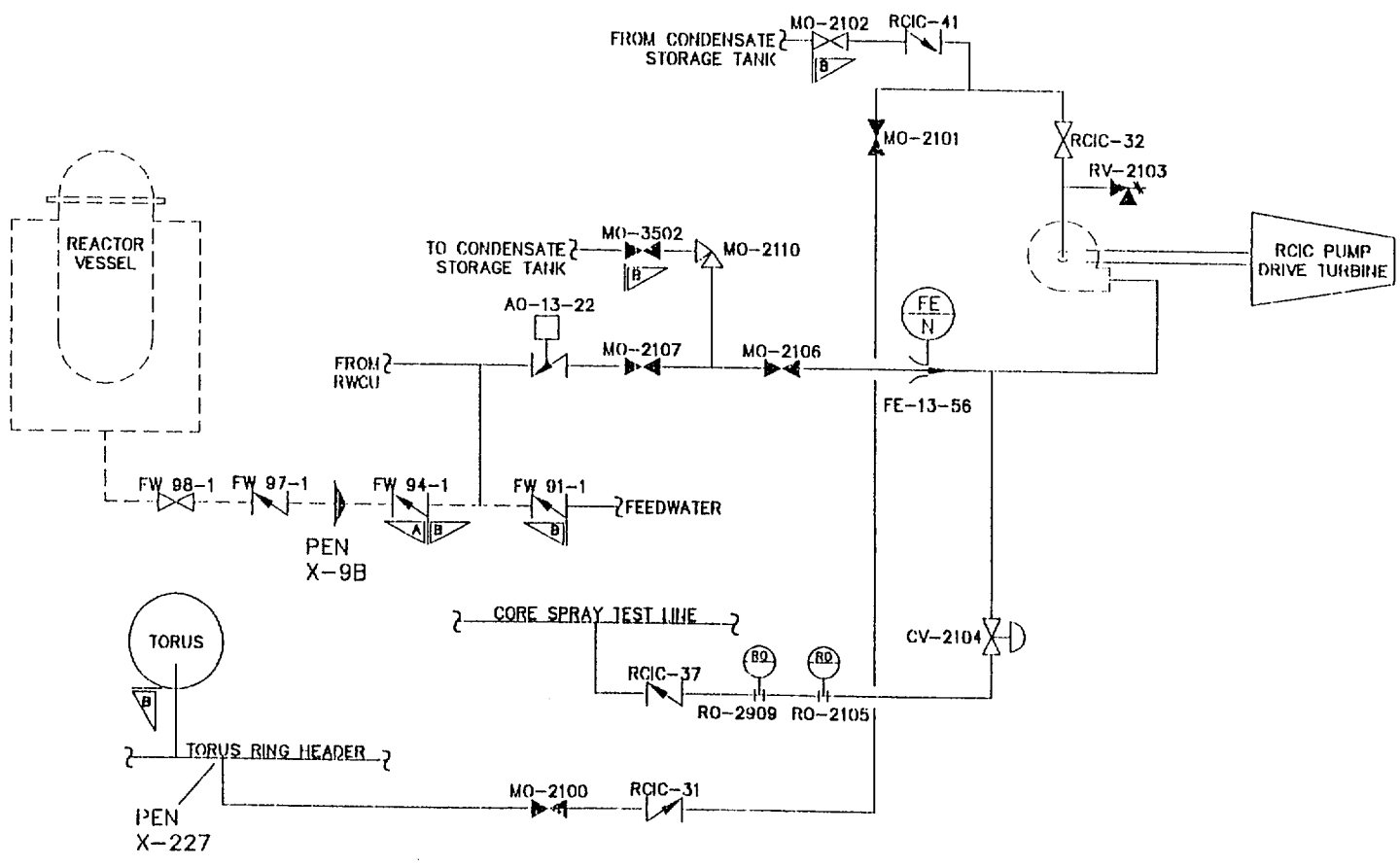

REF: NH-36252

FILE NO:

NSP (M&SP)- MONTICELLO ISI

DWN: TJH CHKD: RAO APPD: DRV

SYSTEM: REACTOR CORE ISOLATION COOLING (WATER SIDE)

LINE:

DWG: 1.5-11 REV: 02

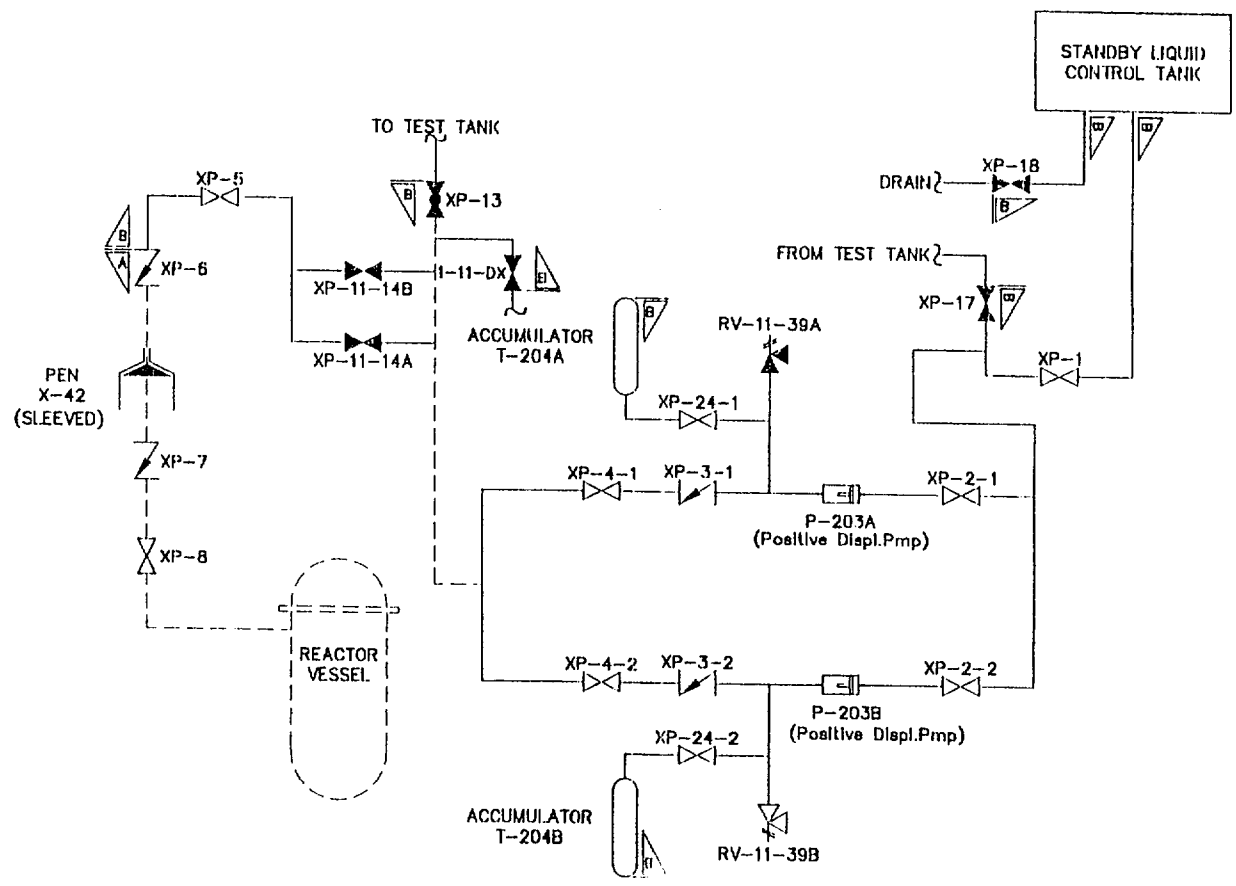

REF: NH-36253 | FILE NO:

NSP (M&SP)- MONTICELLO | ISI

DWN: TJH | CHKD: RAV | APPD: DEJ

SYSTEM: STANDBY LIQUID CONTROL SYSTEM

LINE:

DWG: 1.5-12 | REV: 02

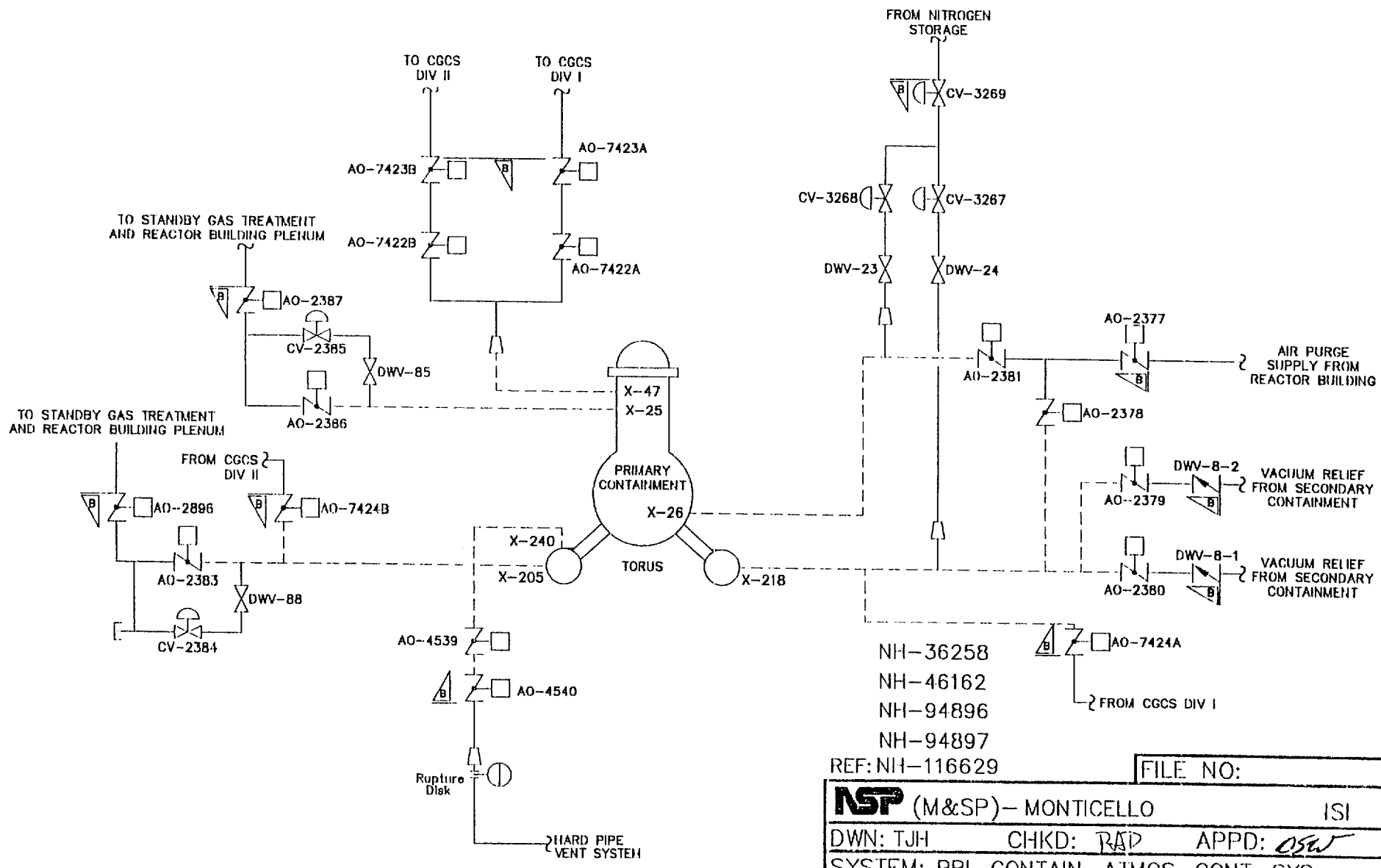

NH-36258
NH-46162
NH-94896
NH-94897
REF: NH-116629

FILE NO:

NSP (M&SP)- MONTICELLO ISI

DWN: TJH CHKD: RAD APPD: OSW

SYSTEM: PRI. CONTAIN. ATMOS. CONT. SYS.

LINE:

DWG: 1.5-13 REV: 02

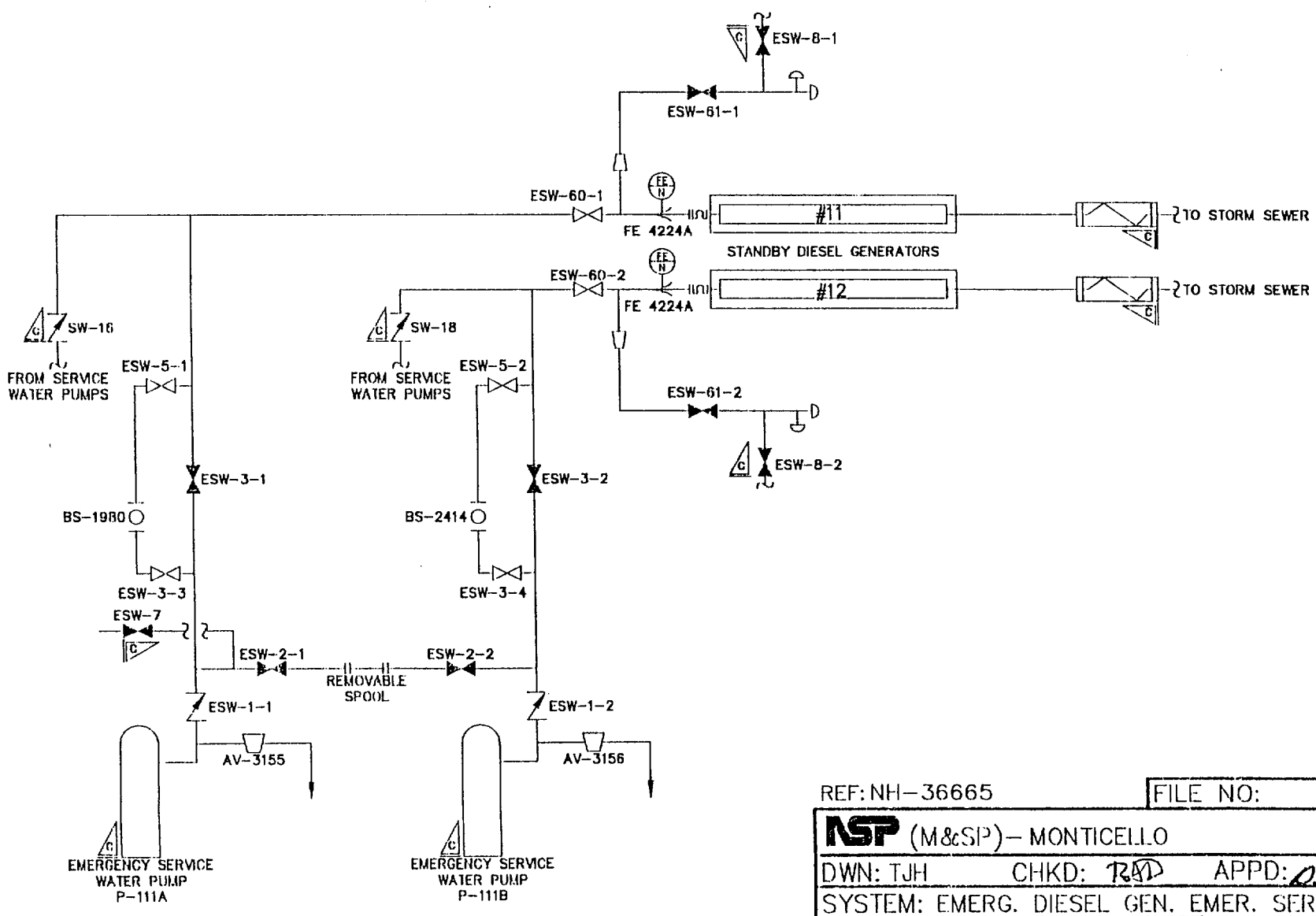

REF: NH-36665 | FILE NO:

NSP (M&SP)– MONTICELLO ISI

DWN: TJH CHKD: RAD APPD: DSW

SYSTEM: EMERG. DIESEL GEN. EMER. SERV. WATER

LINE:

DWG: 1.5-14 | REV: 02

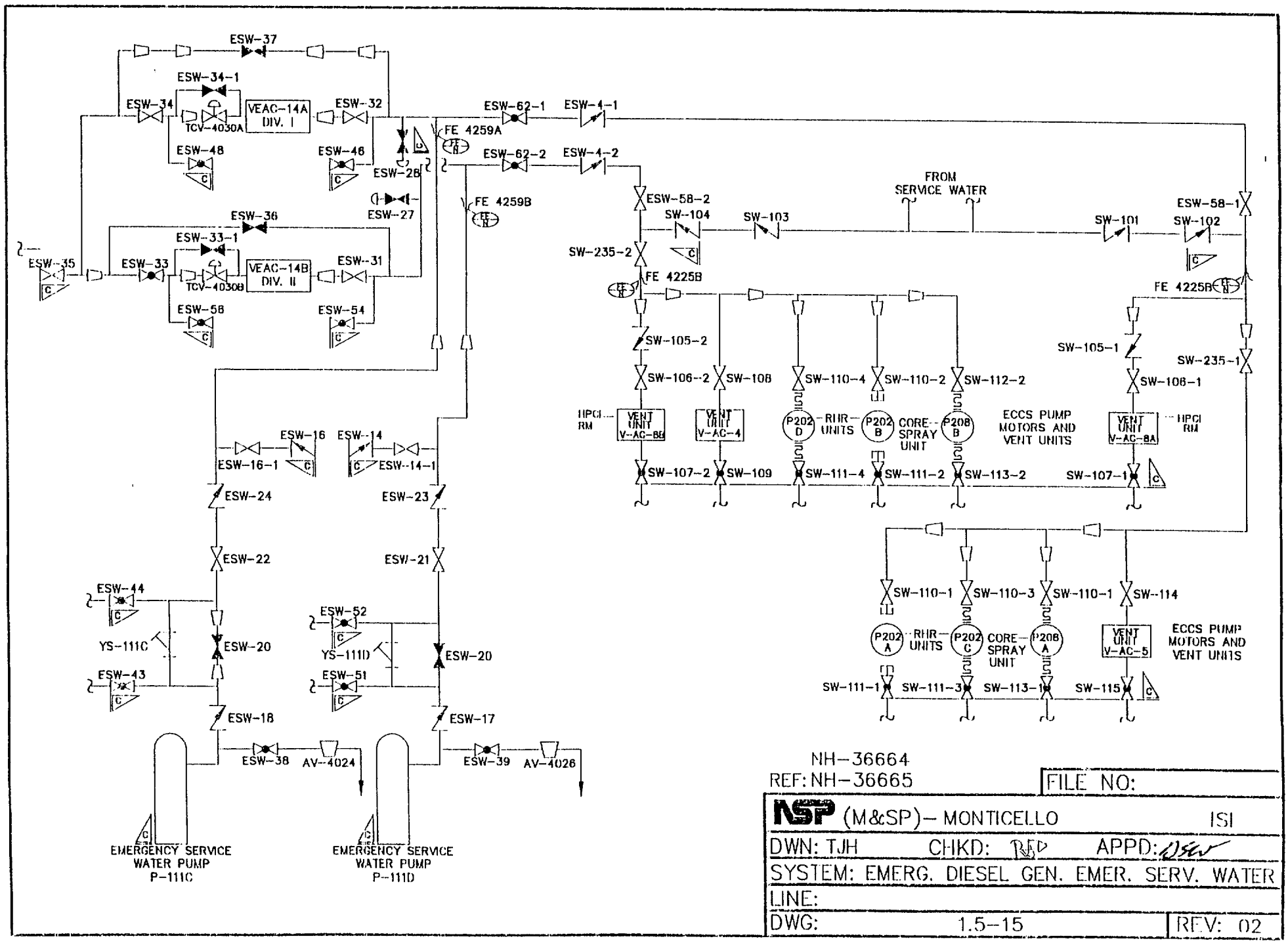

NH-36664
REF: NH-36665

FILE NO:

NSP (M&SP)– MONTICELLO ISI

DWN: TJH CHKD: RED APPD: DSEV

SYSTEM: EMERG. DIESEL GEN. EMER. SERV. WATER

LINE:

DWG: 1.5-15 REV: 02

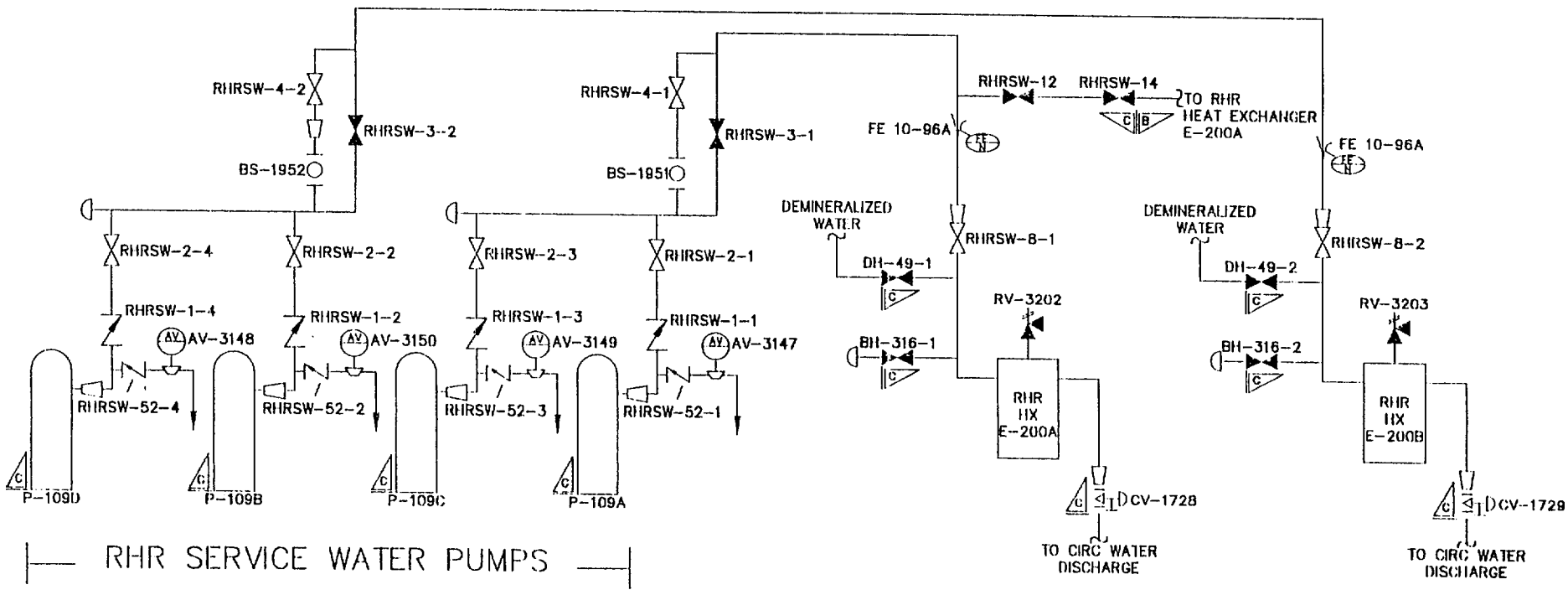

RHR SERVICE WATER PUMPS

NH-36664
REF: NH-36665

FILE NO:	
NSP (M&SP)– MONTICELLO	ISI
DWN: TJH CHKD: RAD APPD: DEW	
SYSTEM: RHR SERVICE WATER	
LINE:	
DWG: 1.5–16	REV: 02

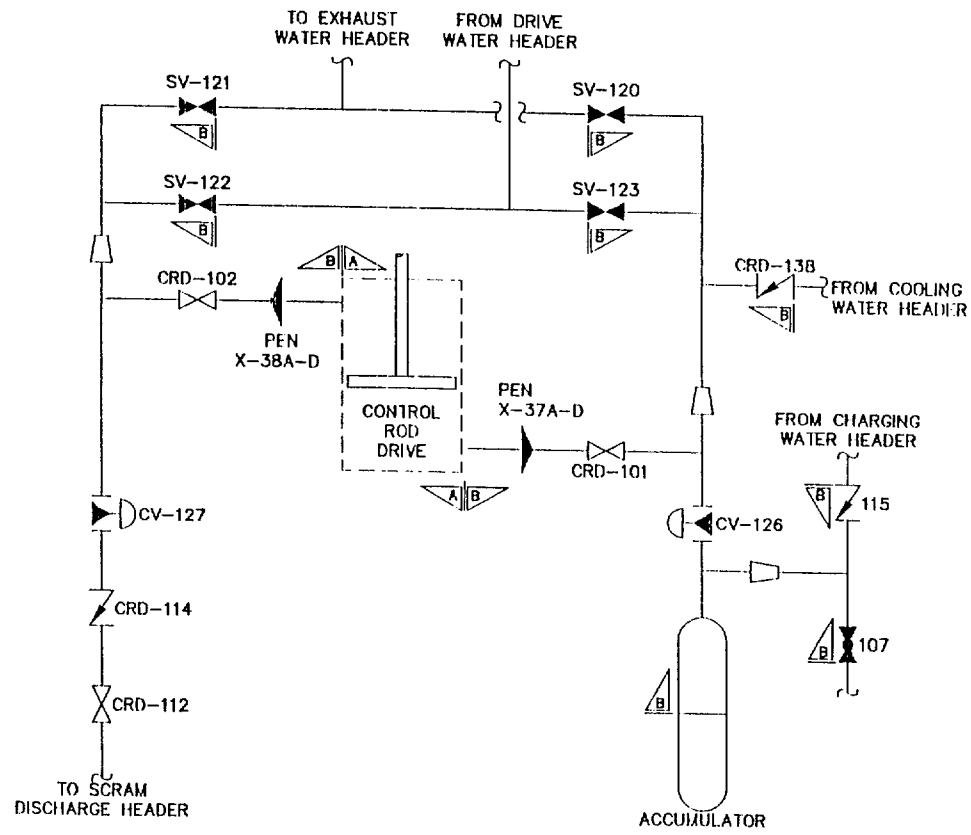

REF: NH-36245 | FILE NO:

NSP (M&SP)- MONTICELLO ISI

DWN: TJH CHKD: APPD:

SYSTEM: HYDRAULIC CONTROL UNIT

LINE:

DWG: 1.5-17 REV: 03

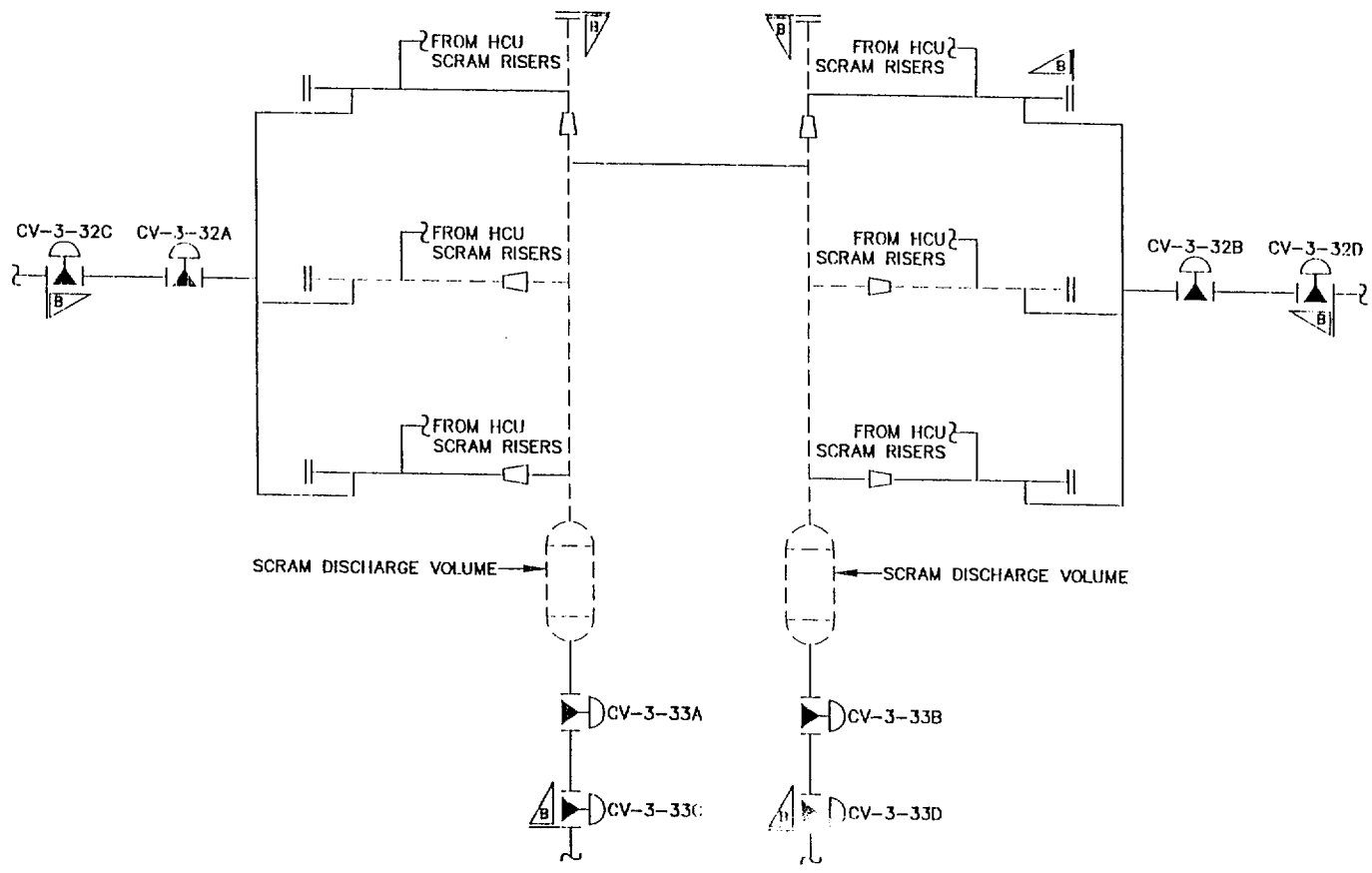

REF: NH-36245 | FILE NO: 18

NSP (M&SP)- MONTICELLO | ISI

DWN: TJH | CHKD: [illegible] | APPD: [illegible]

SYSTEM: CONT. ROD DRIVE SYS. (SCRAM DISCH. PIPING)

LINE:

DWG: 1.5-18 | REV: 02

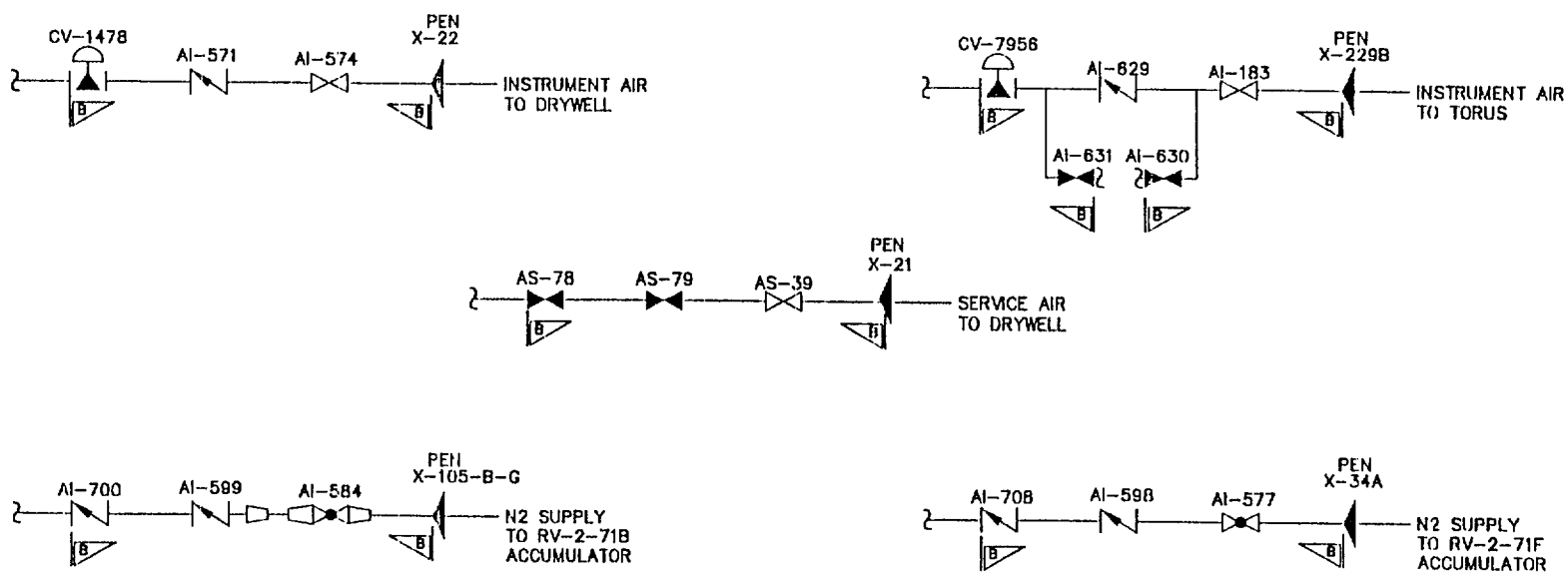

NH-36049-4
NH-36049-10
NH-36049-12
REF: NH-36049-14

FILE NO:	19
NSP (M&SP)- MONTICELLO	ISI
DWN: CADWorks CHKD:	APPD:
SYSTEM: COMPRESSED AIR SYSTEM	
LINE:	
DWG: 1.5-19	REV: 01

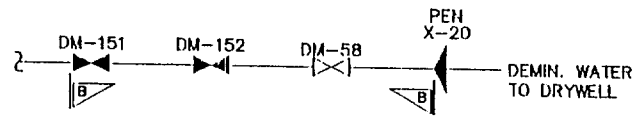

DEMIN. WATER SYSTEM

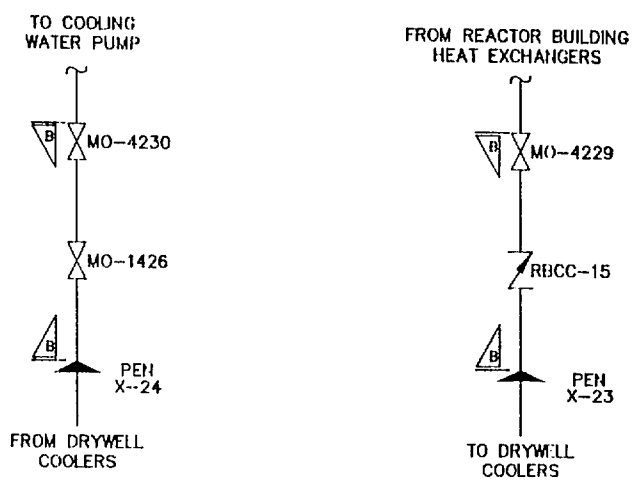

REACTOR BUILDING COOLING WATER SYSTEM

NH-36039
REF: NH-36042-2

FILE NO: 20		
NSP (M&SP)- MONTICELLO		ISI
DWN: TJH	CHKD:	APPD:
SYSTEM: DEMIN. WATER SYSTEM & RX BLDG CW		
LINE:		
DWG: 1.5-20		REV: 02

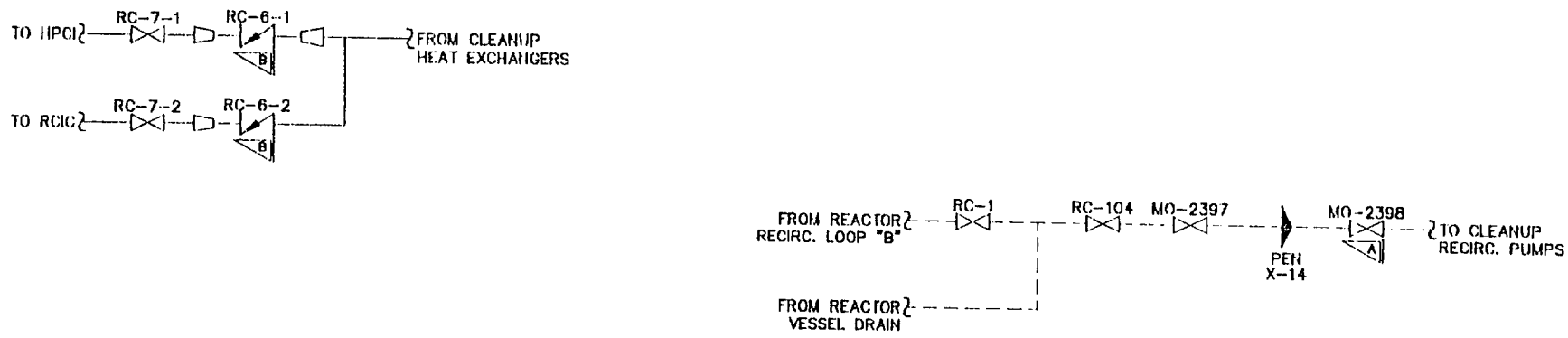

REACTOR WATER CLEAN-UP SYSTEM

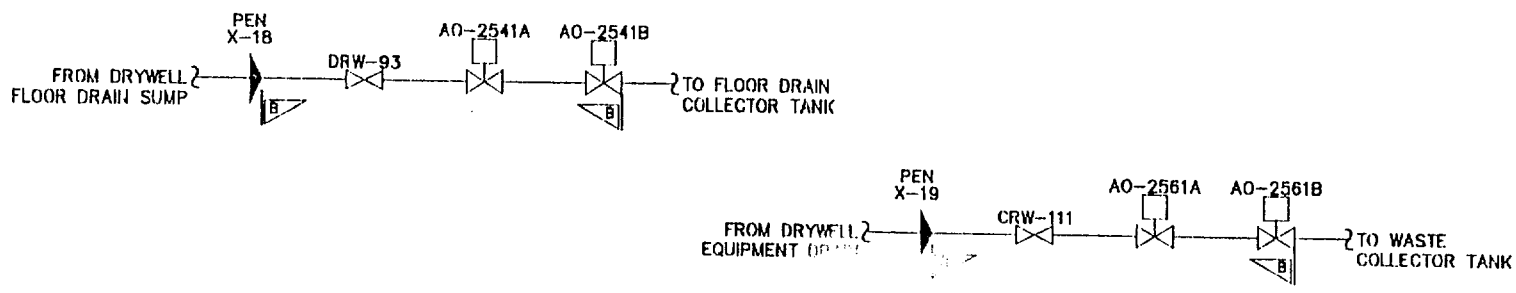

LIQUID RADWASTE

NH-36043
NH-36044
REF: NH-36254

FILE NO:

NSP (M&SP)- MONTICELLO ISI

DWN: TJH CHKD: RAD APPD: [illegible]

SYSTEM: RX WTR CLEAN-UP & LIQUID RADWASTE

LINE:

DWG: 1.5-21 REV: 02

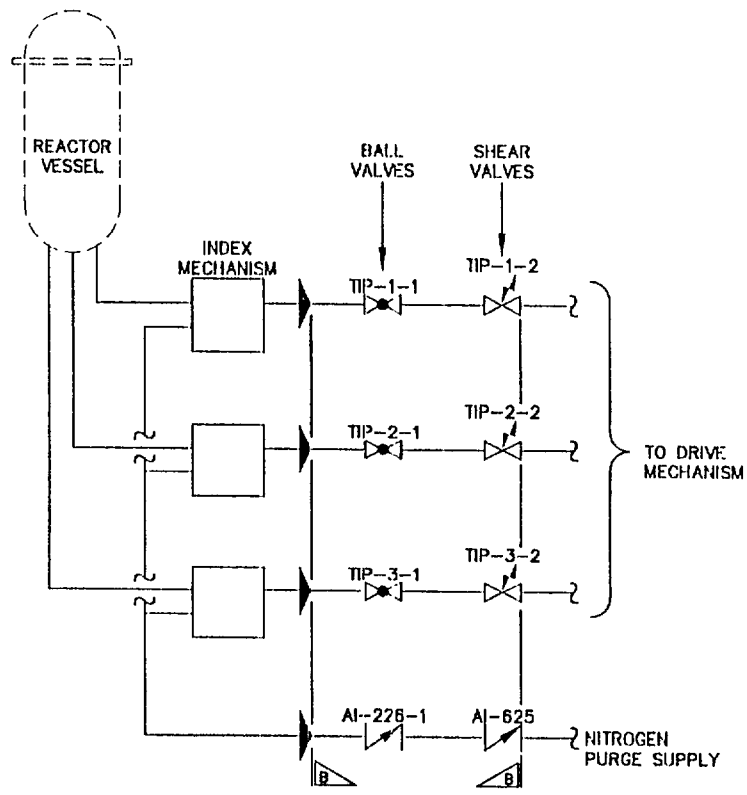

REF:	FILE NO: 22
NSP (M&SP)– MONTICELLO	ISI
DWN: CADWorks CHKD: APPD:	
SYSTEM: TRAVERSING IN-CORE PROBE SYSTEM	
LINE:	
DWG: 1.5-22	REV: 01

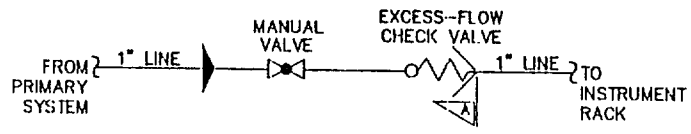

TYPICAL FOR EXCESS-FLOW CHECK VALVES EXCEPT
EXCESS-FLOW CHECK VALVE FOR PENETRATION X-28F

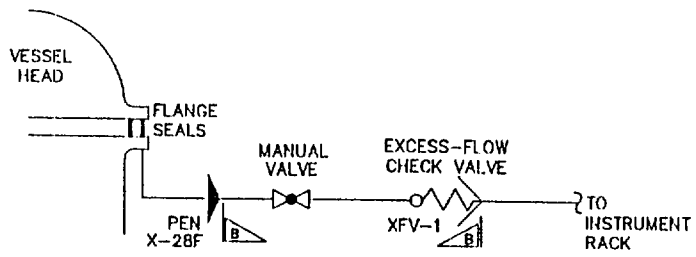

EXCESS-FLOW CHECK VALVE
FOR PENETRATION X-28F

NH-36241
REF: NH-36242

FILE NO:	23
NSP (M&SP)- MONTICELLO	ISI
DWN: CADWorks CHKD:	APPD:
SYSTEM: EXCESS-FLOW CHECK VALVES	
LINE:	
DWG: 1.5-23	REV: 01

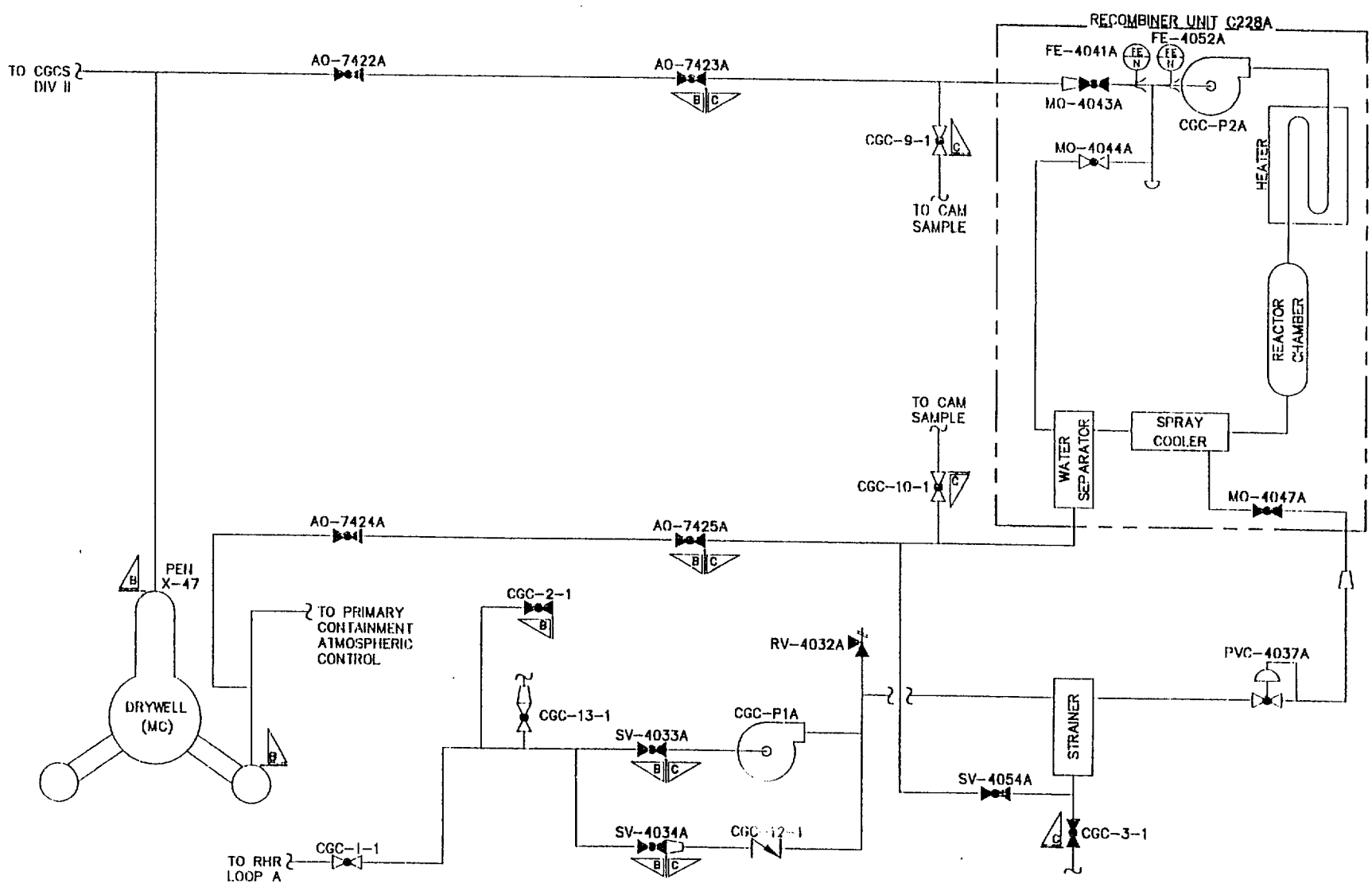

REF: NH-94896

FILE NO:

NSP (M&SP)- MONTICELLO ISI

DWN: TJH CHKD: RJD APPD: DRJ

SYSTEM: COMBUSTIBLE GAS CONTROL, DIVISION 1

LINE:

DWG: 1.5-24 REV: 02

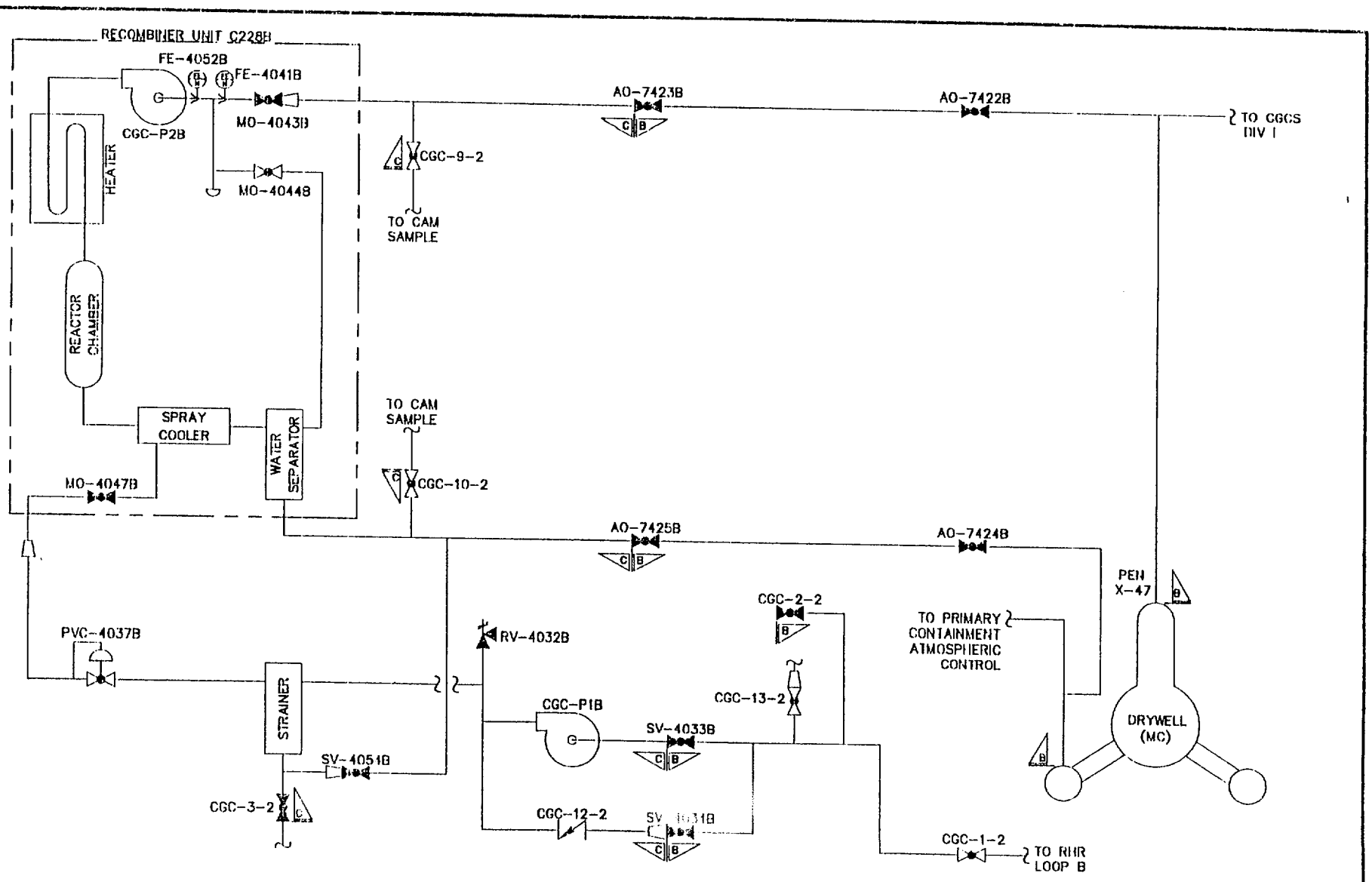

REF: NH-94897 | FILE NO:

NSP (M&SP)- MONTICELLO ISI

DWN: TJH CHKD: APPD:

SYSTEM: COMBUSTIBLE GAS CONTROL, DIVISION II

LINE:

DWG: 1.5-25 | REV: 02

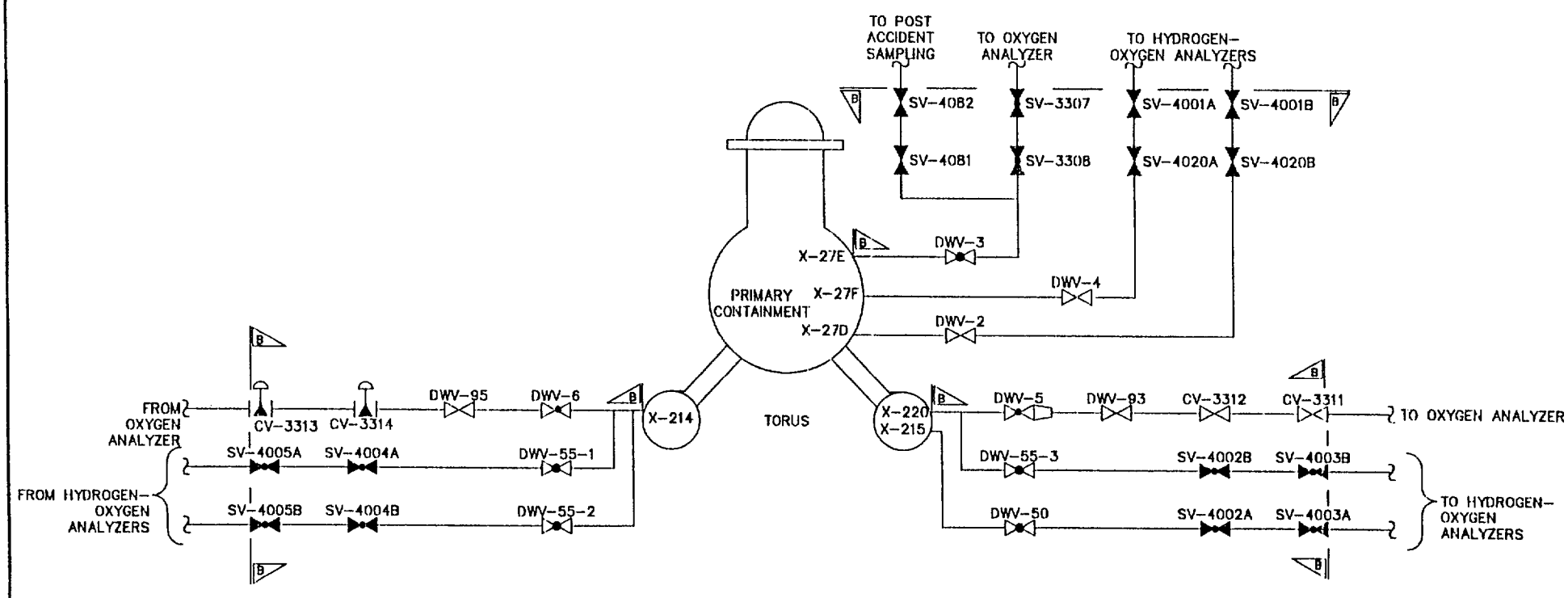

NH-46162
NH-91197
REF: NH-96042-1

FILE NO:	26
NSP (M&SP)- MONTICELLO	ISI
DWN: CADWorks CHKD:	APPD:
SYSTEM: PRIMARY CONTAINMENT SAMPLING SYSTEMS	
LINE:	
DWG: 1.5-26	REV: 01

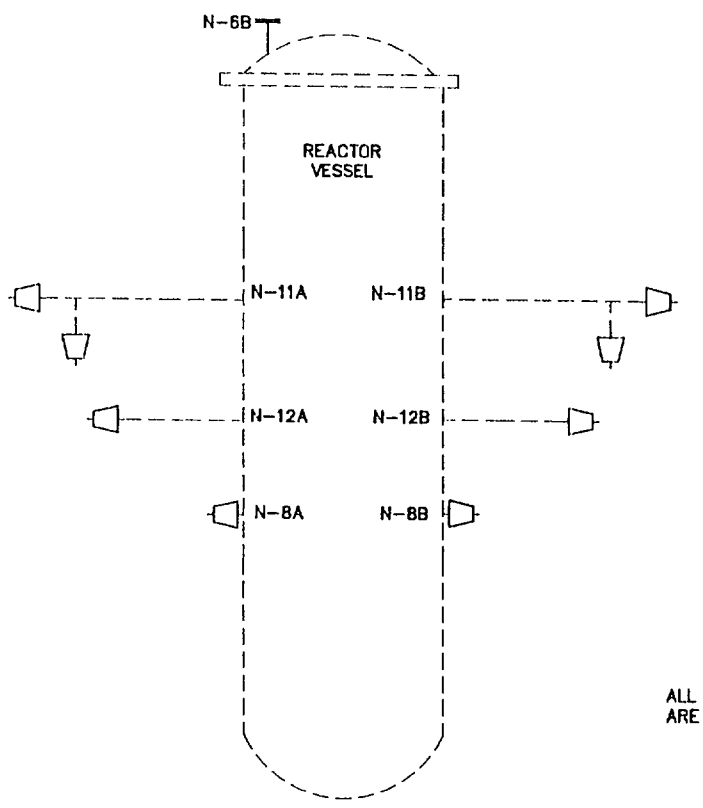

ALL BOUNDRIES SHOWN ARE QUALITY GROUP A

REF: NH-36242	FILE NO: 27
NSP (M&SP)- MONTICELLO	ISI
DWN: CADWorks CHKD: DSW APPD: DSW	
SYSTEM: REACTOR VESSEL INSTRUMENTATION	
LINE:	
DWG: 1.5-27	REV: 01

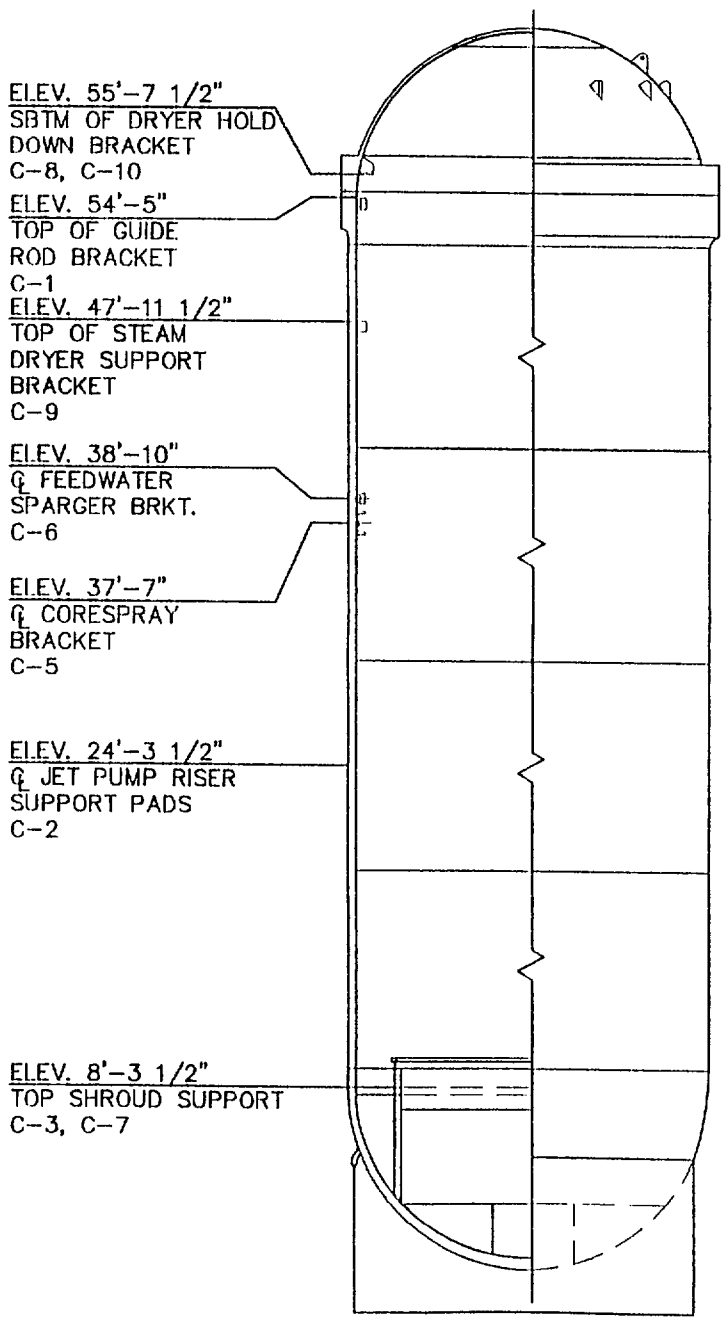

ELEVATION VIEW

REF:	FILE NO:
NSP (M&SP)-- MONTICELLO	ISI
DWN: CADWorks CHKD: RAD	APPD: DEW
SYSTEM: RX VESSEL INTERIOR	
LINE: N/A	
DWG: ISI FIG. 0	REV: 02

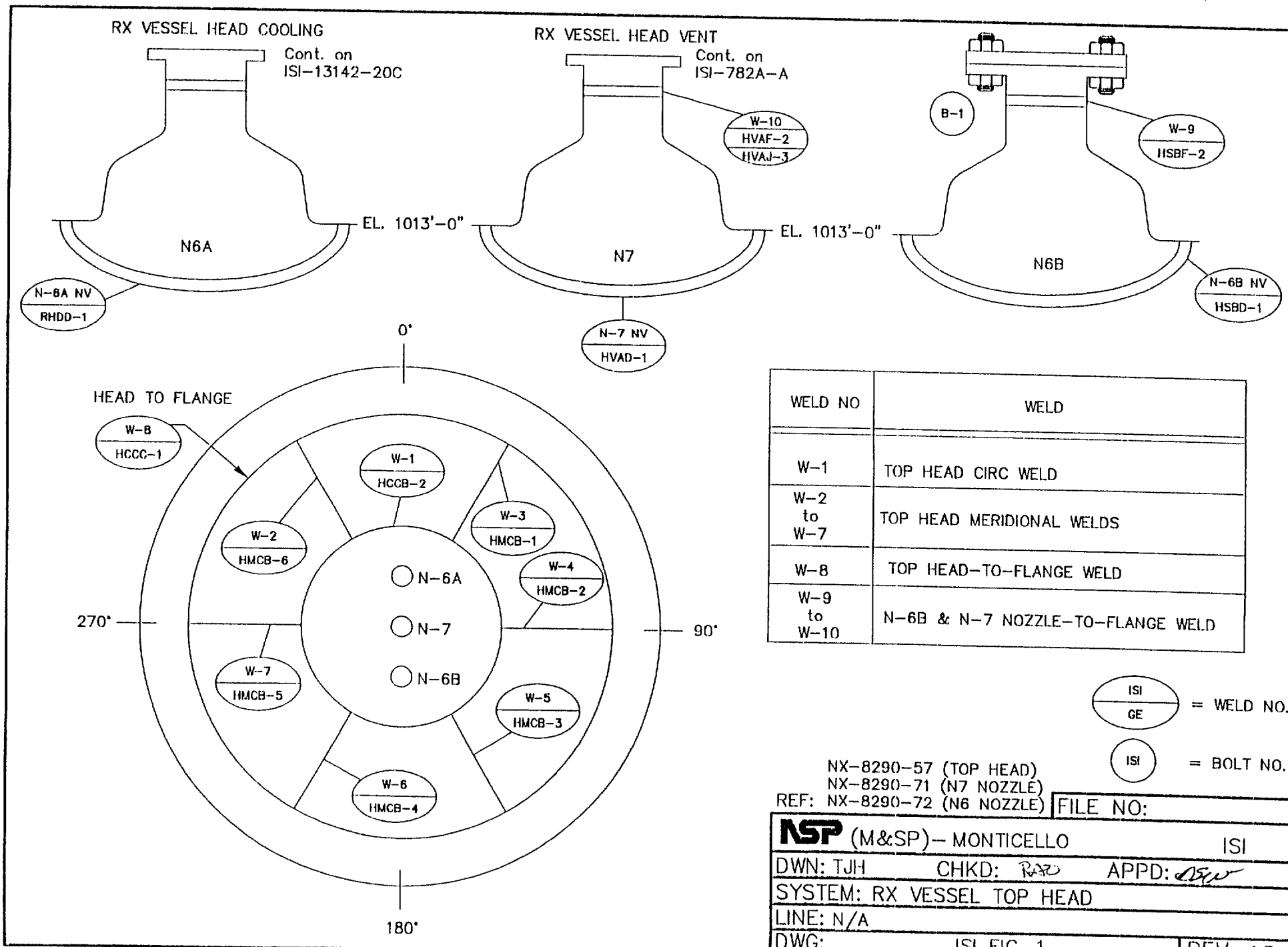

WELD NO	WELD
W-1	TOP HEAD CIRC WELD
W-2 to W-7	TOP HEAD MERIDIONAL WELDS
W-8	TOP HEAD-TO-FLANGE WELD
W-9 to W-10	N-6B & N-7 NOZZLE-TO-FLANGE WELD

REF: NX-8290-57 (TOP HEAD)
NX-8290-71 (N7 NOZZLE)
NX-8290-72 (N6 NOZZLE)

FILE NO:

NSP (M&SP)-- MONTICELLO ISI

DWN: TJH CHKD: APPD:

SYSTEM: RX VESSEL TOP HEAD

LINE: N/A

DWG: ISI FIG. 1 REV: 03

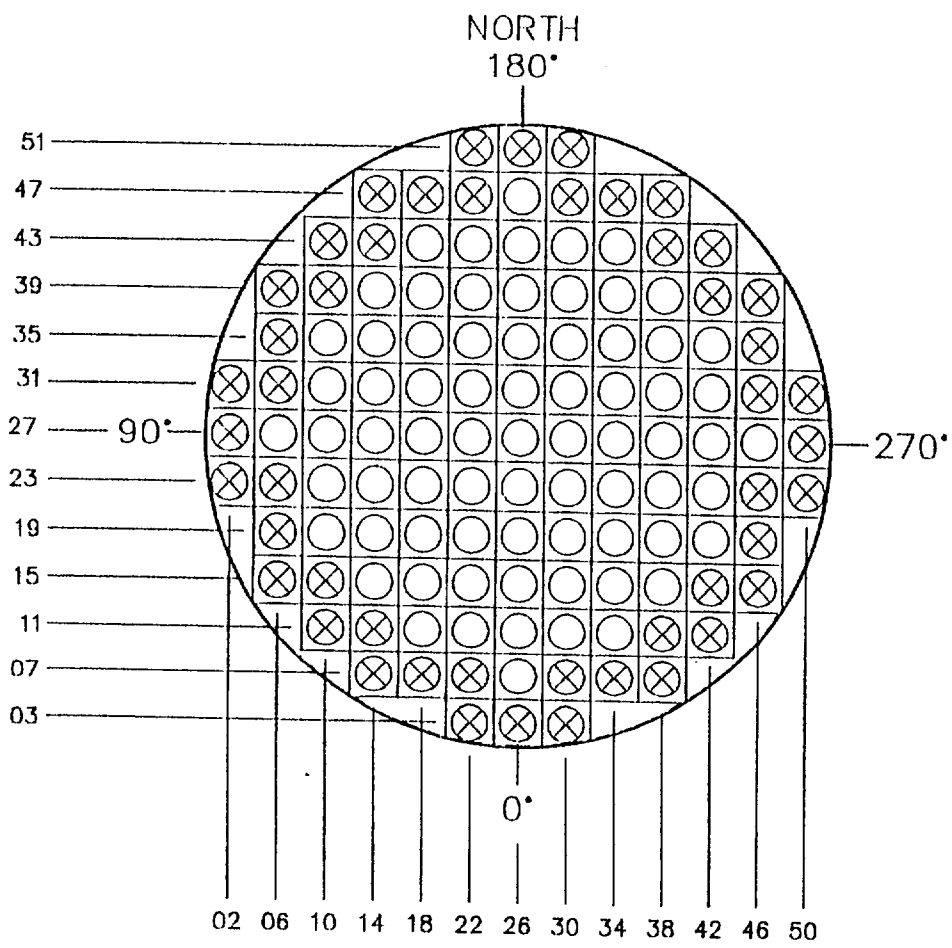

VIEW LOOKING DOWN

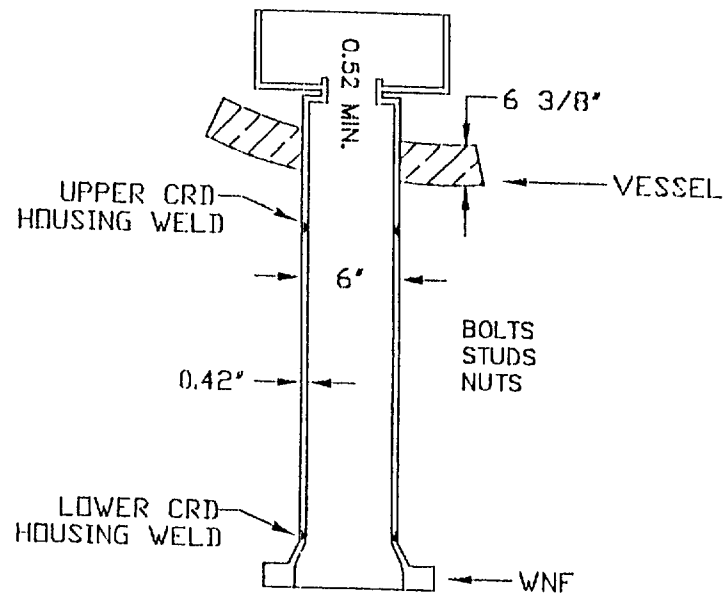

CONTROL ROD DRIVE LOCATION & HOUSING WELD
(TYPICAL)

REF: NX-7831-471	FILE NO:
NSP (M&SP)- MONTICELLO	ISI
DWN: CADWorks CHKD: RAD	APPD:
SYSTEM: CRD LOCATION RX VESSEL	
LINE: N/A	
DWG: ISI FIG. 2	REV: 03

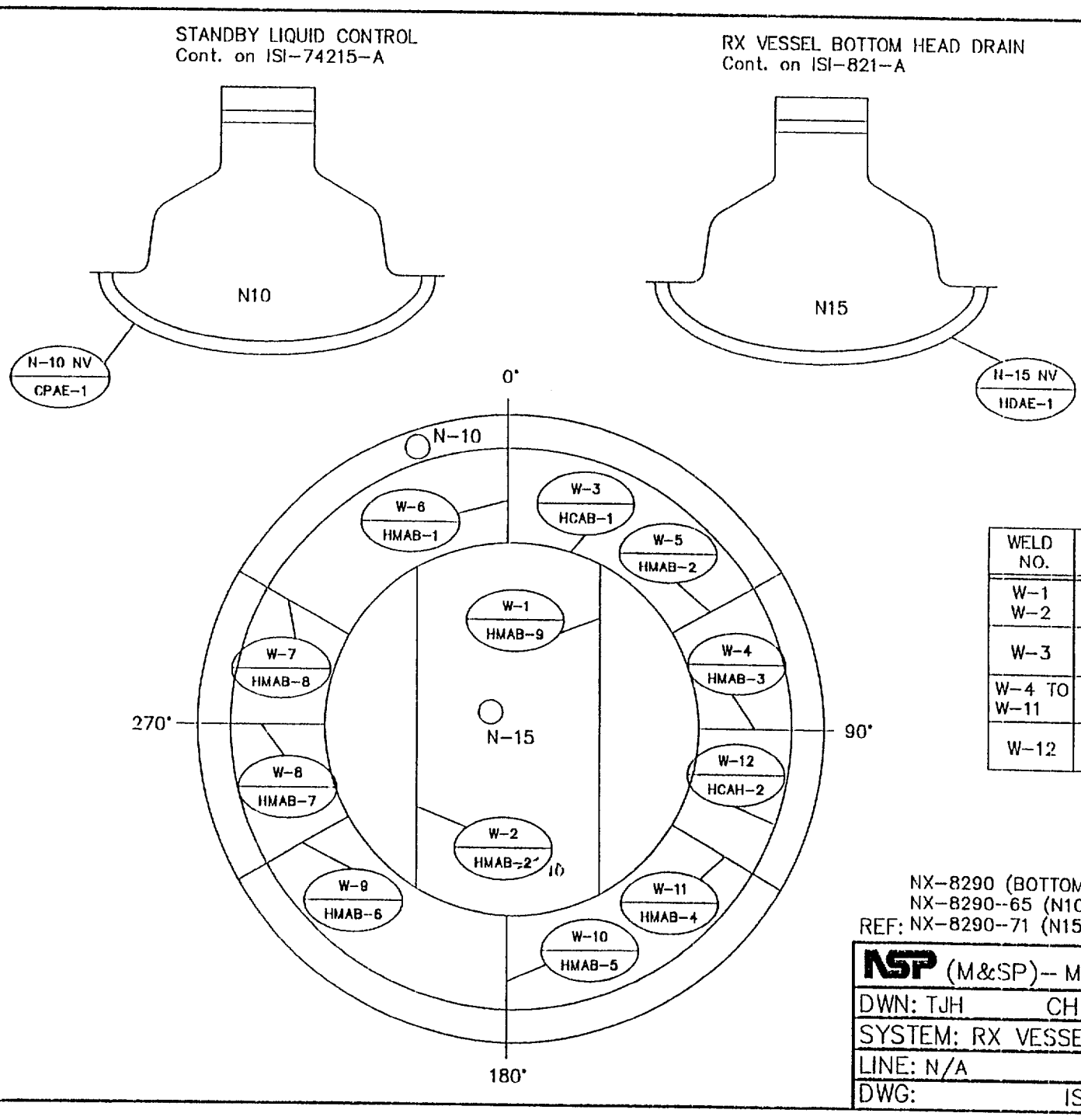

WELD NO.	WELD
W-1 W-2	BOTTOM HEAD DOLLAR PLATE SEAM WELD
W-3	BOTTOM HEAD DOLLAR PLATE TO SIDE PLATES
W-4 TO W-11	BOTTOM HEAD SIDE PLATES MERIDIONAL WELDS
W-12	BOTTOM HEAD SKIRT WELD

ISI / CONST = WELD NO.

REF: NX-8290 (BOTTOM HEAD)
NX-8290--65 (N10 NOZZLE)
NX-8290--71 (N15 NOZZLE)

FILE NO:

NSP (M&SP)-- MONTICELLO ISI

DWN: TJH CHKD: TRAO APPD: DKW

SYSTEM: RX VESSEL BOTTOM HEAD

LINE: N/A

DWG: ISI FIG. 3 REV: 03

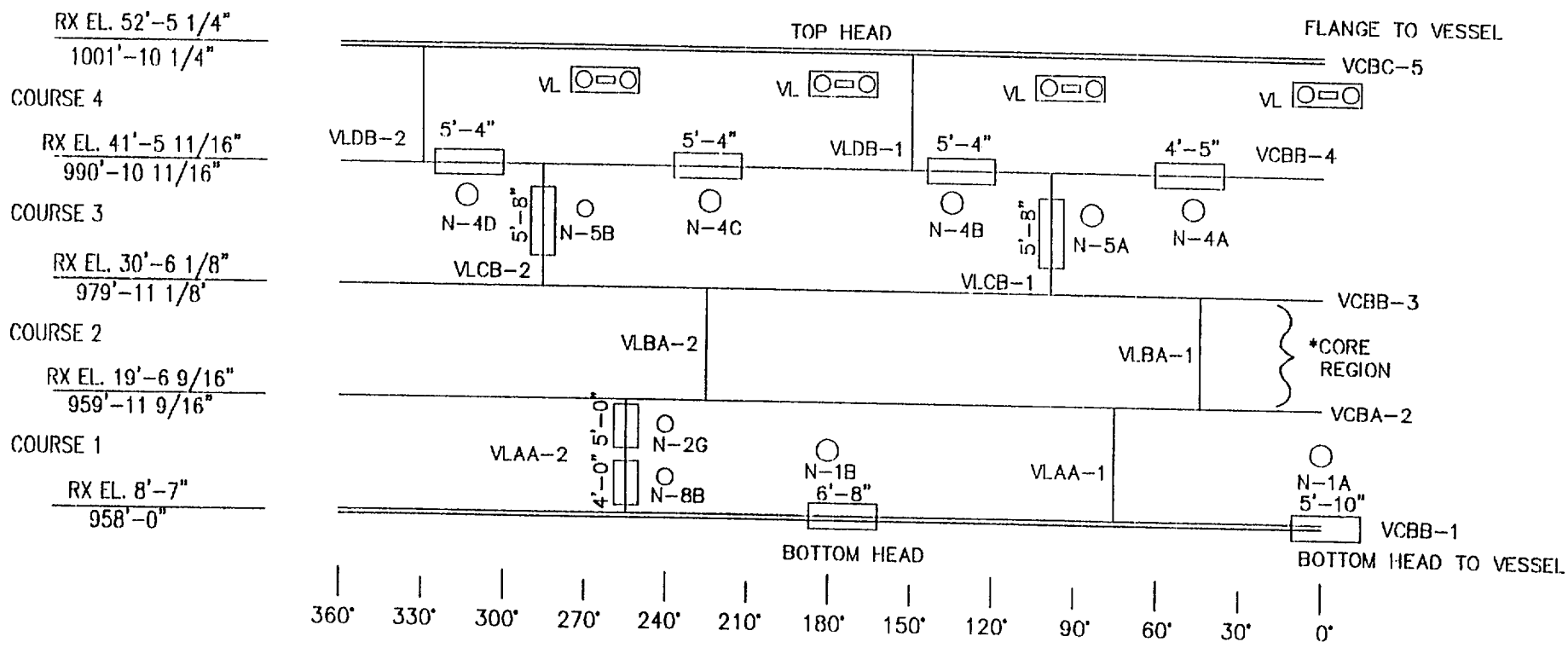

NOTES:

1. CIRC. * LONG. WELDS ACCESSIBLE THROUGH NOZZLE WINDOWS (APPX. LENGTH ACCESSIBLE AS SHOWN)
2. VL – VESSEL STABILIZER LUG INTEGRAL ATTACHMENT – – INACCESSIBLE (RR#2)

REF: NX-9310-11 | FILE NO:

NSP (M&SP)– MONTICELLO ISI

DWN: TJH CHKD: RAD APPD:

SYSTEM: CIRC & LONG REACTOR VESSEL WELDS

LINE: N/A

DWG: ISI FIG.4 | REV: 03

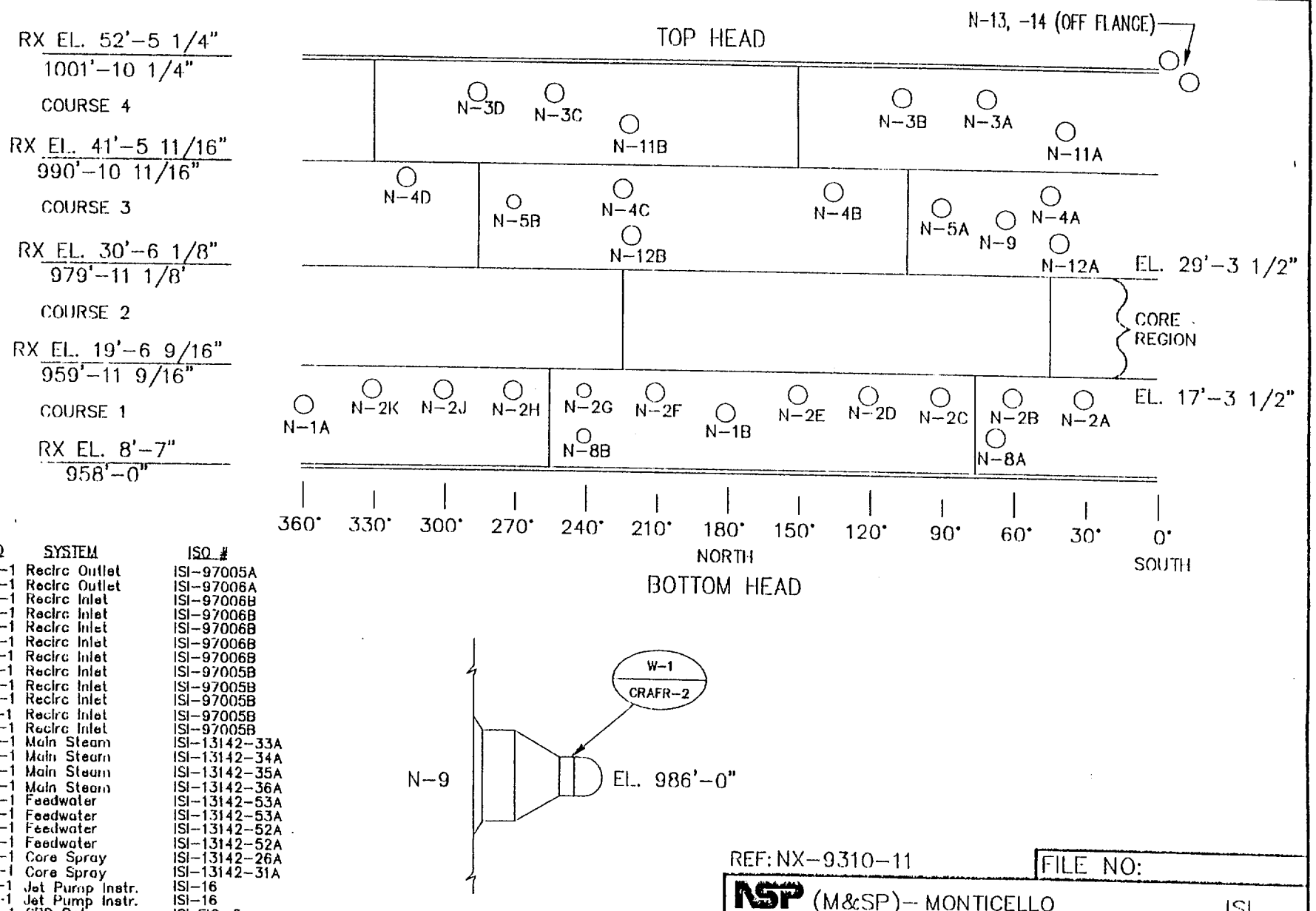

NOZZLE	WELD	SYSTEM	ISO #
N-1A	RCAD-1	Recirc Outlet	ISI-97005A
N-1B	RCBD-1	Recirc Outlet	ISI-97006A
N-2A	RRAD-1	Recirc Inlet	ISI-97006B
N-2B	RRBD-1	Recirc Inlet	ISI-97006B
N-2C	RRCD-1	Recirc Inlet	ISI-97006B
N-2D	RRDD-1	Recirc Inlet	ISI-97006B
N-2E	RRED-1	Recirc Inlet	ISI-97006B
N-2F	RRFD-1	Recirc Inlet	ISI-97005B
N-2G	RRGD-1	Recirc Inlet	ISI-97005B
N-2H	RRHD-1	Recirc Inlet	ISI-97005B
N-2J	RRJD-1	Recirc Inlet	ISI-97005B
N-2K	RRKD-1	Recirc Inlet	ISI-97005B
N-3A	MSAD-1	Main Steam	ISI-13142-33A
N-3B	MSBD-1	Main Steam	ISI-13142-34A
N-3C	MSCD-1	Main Steam	ISI-13142-35A
N-3D	MSDD-1	Main Steam	ISI-13142-36A
N-4A	FWAD-1	Feedwater	ISI-13142-53A
N-4B	FWBD-1	Feedwater	ISI-13142-53A
N-4C	FWCD-1	Feedwater	ISI-13142-52A
N-4D	FWDD-1	Feedwater	ISI-13142-52A
N-5A	CSAD-1	Core Spray	ISI-13142-26A
N-5B	CSBD-1	Core Spray	ISI-13142-31A
N-8A	JPAD-1	Jet Pump Instr.	ISI-16
N-8B	JPBD-1	Jet Pump Instr.	ISI-16
N-9	CRAD-1	CRD Return	ISI FIG. 5
N-11A	VIAE-1	Instrumentation	ISI-97008A
N-11B	VIBE-1	Instrumentation	ISI-97007A
N-12A	VICE-1	Instrumentation	ISI-19
N-12B	VIDE-1	Instrumentation	ISI-19
N-13	VFAE-1	Flange-to-Nozzle	ISI FIG. 5
N-14	VFBE-1	Flange-to-Nozzle	ISI FIG. 5

REF: NX-9310-11 | FILE NO:

NSP (M&SP)-- MONTICELLO ISI

DWN: TJH CHKD: RMD APPD: OSEV

SYSTEM: RX VESSEL NOZZLES

LINE: N/A

DWG: ISI FIG.5 | REV: 04

REACTOR VESSEL STUD, WASHER & LIGAMENT LOCATION

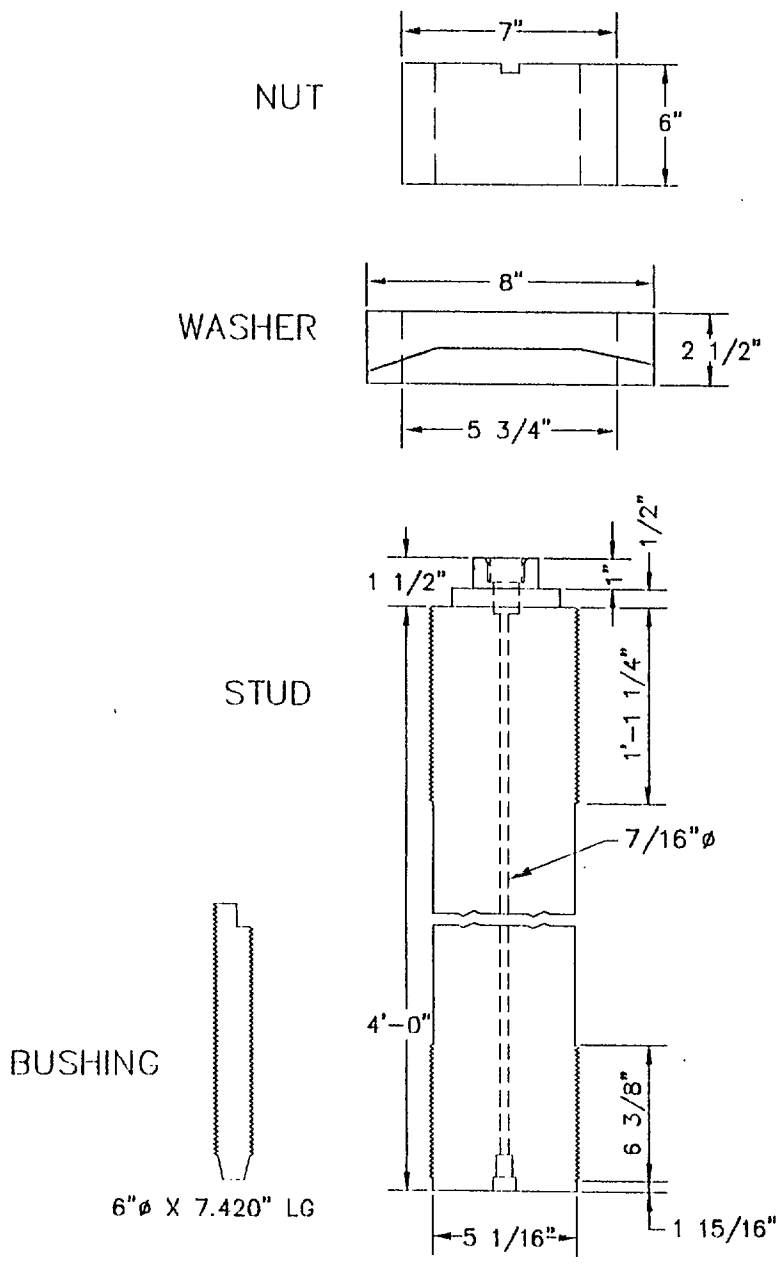

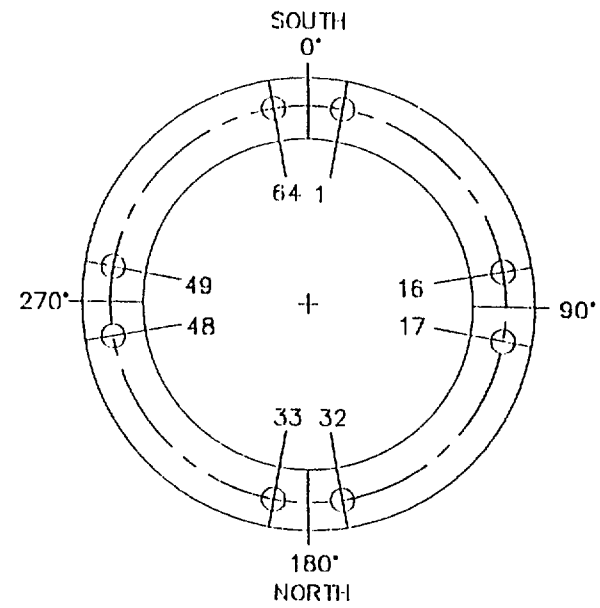

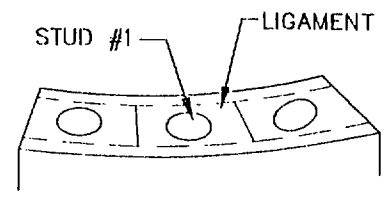

REF: NX-8290-63

FILE NO:	
NSP (M&SP)- MONTICELLO	ISI
DWN: TJH CHKD: RMD APPD: OSKJ	
SYSTEM: REACTOR VESSEL BOLTING	
LINE: N/A	
DWG: ISI FIG. 6	REV: 04

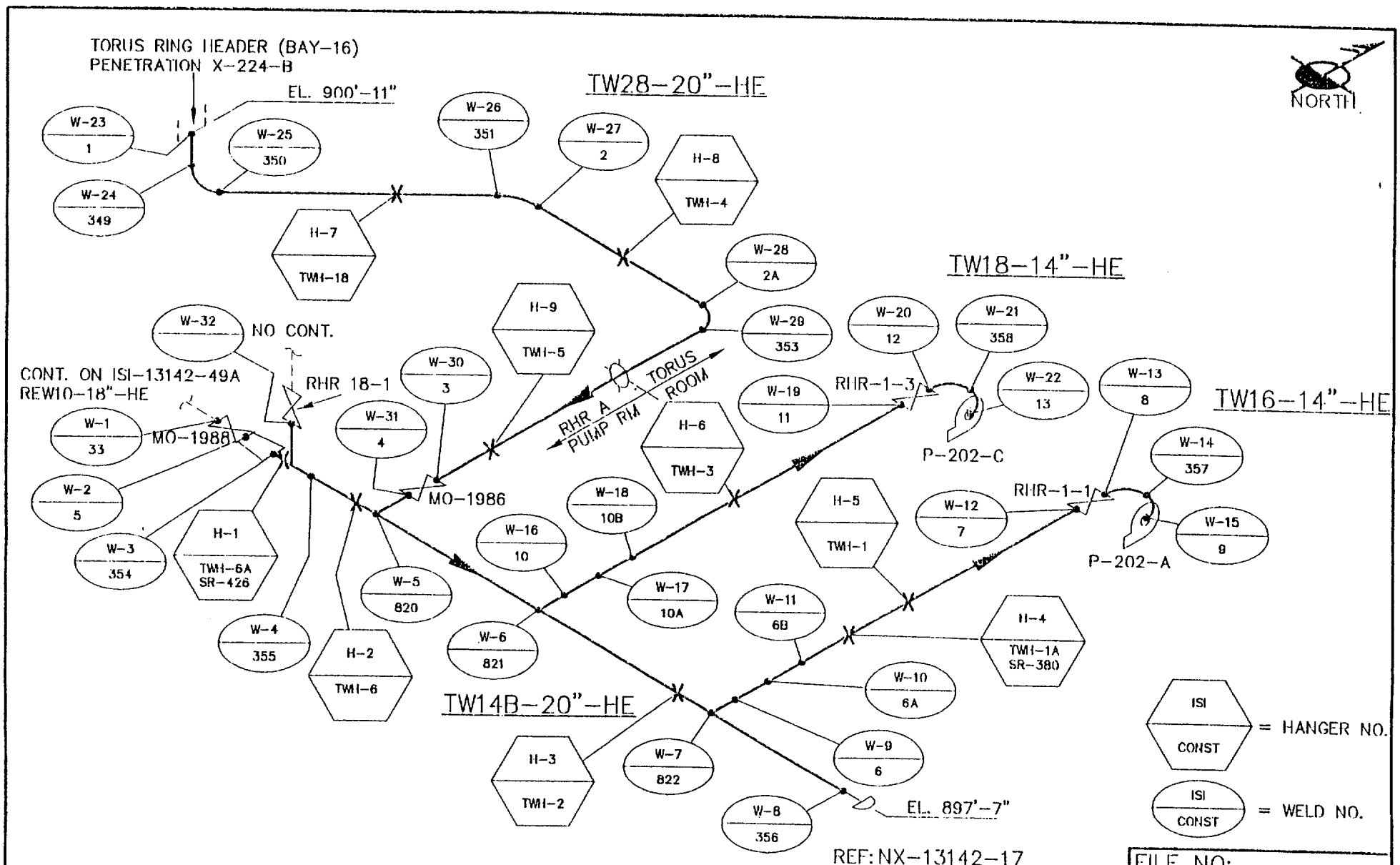

REF: NX-13142-17

FILE NO:

NSP (M&SP)- MONTICELLO ISI

DWN: TJH CHKD: RM APPD:

SYSTEM: RHR "A" SUCTION

LINE: NOTED

DWG: ISI-13142-17A REV: 04

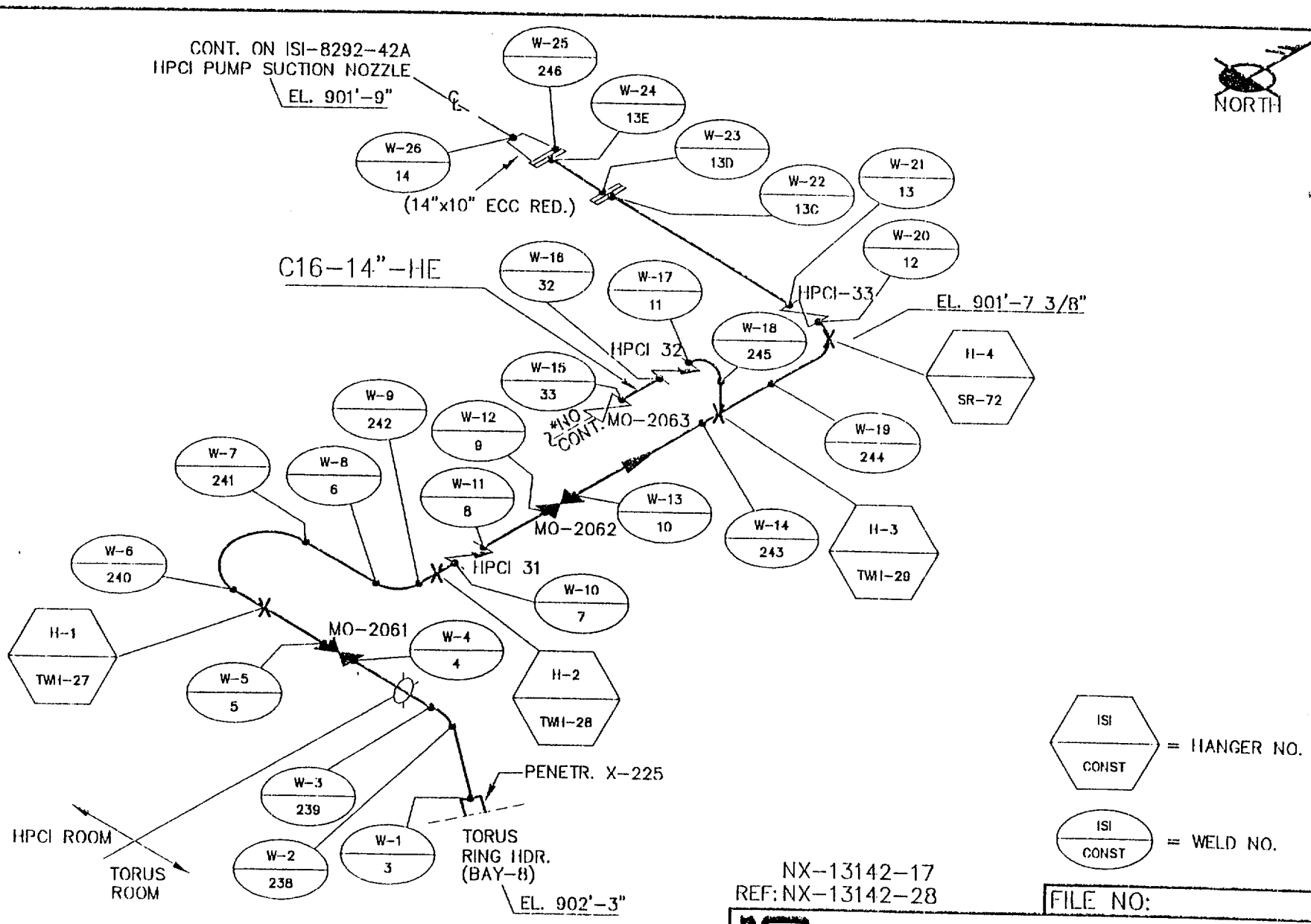

NX-13142-17
REF: NX-13142-28

FILE NO:

NSP (M&SP)- MONTICELLO ISI

DWN: TJH CHKD: RAM APPD:

SYSTEM: HPCI WATER

LINE: TW1-14"-HE

DWG: ISI-13142-17B REV: 04

HIGH PRESSURE COOLANT INJECTION (WATER SIDE SUCTION)

* FROM CONDENSATE STORAGE TANK (QUALITY GROUP D - YELLOW)

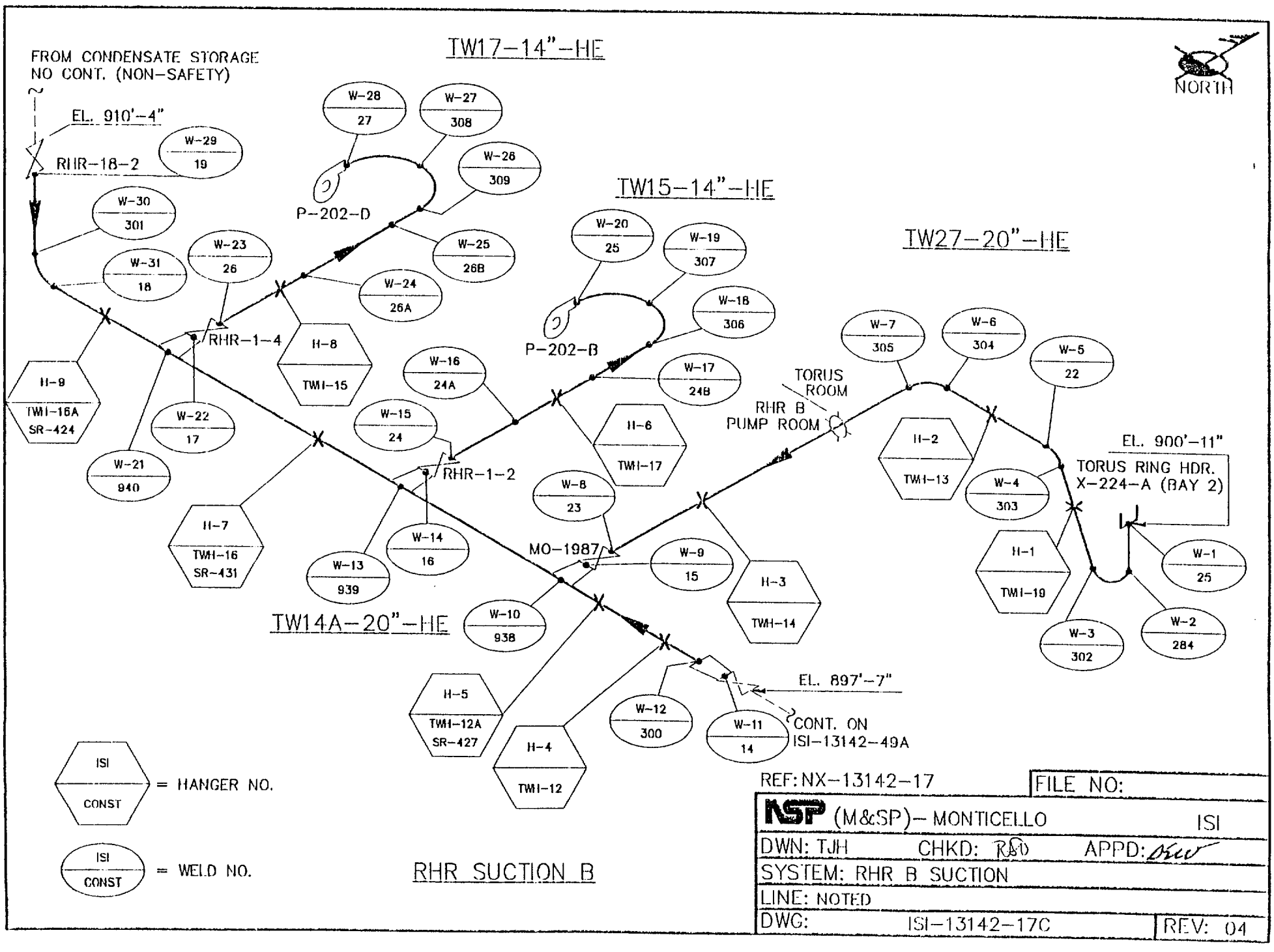

REF: NX-13142-17

FILE NO:

NSP (M&SP)- MONTICELLO ISI

DWN: TJH CHKD: RAD APPD: DEW

SYSTEM: RHR B SUCTION

LINE: NOTED

DWG: ISI-13142-17C REV: 04

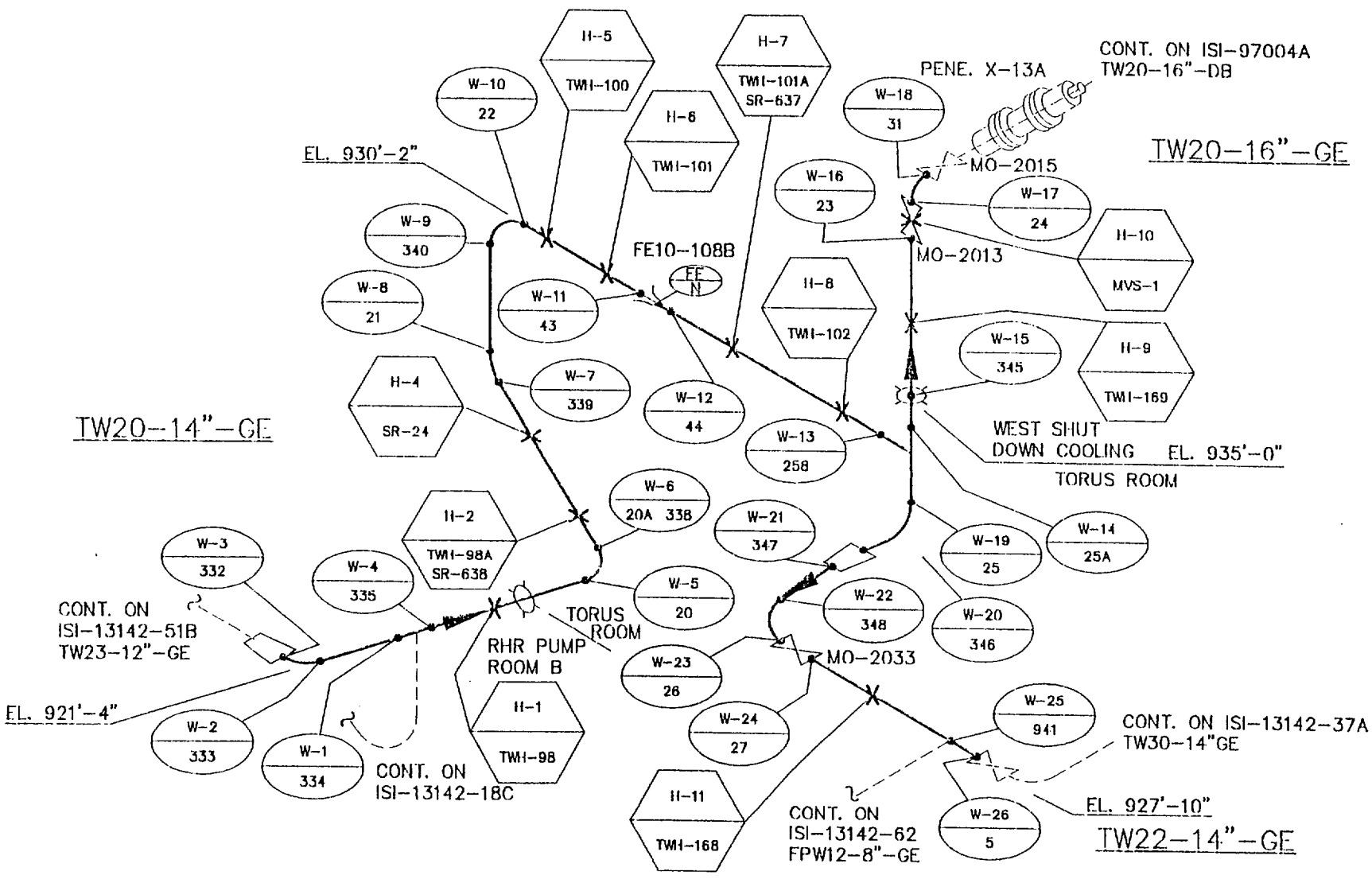

REF: NX-13142-18

FILE NO:

NSP (M&SP)- MONTICELLO ISI

DWN: TJH CHKD: RAM APPD: [illegible]

SYSTEM: RHR B

LINE: NOTED

DWG: ISI-13142-18A REV: 04

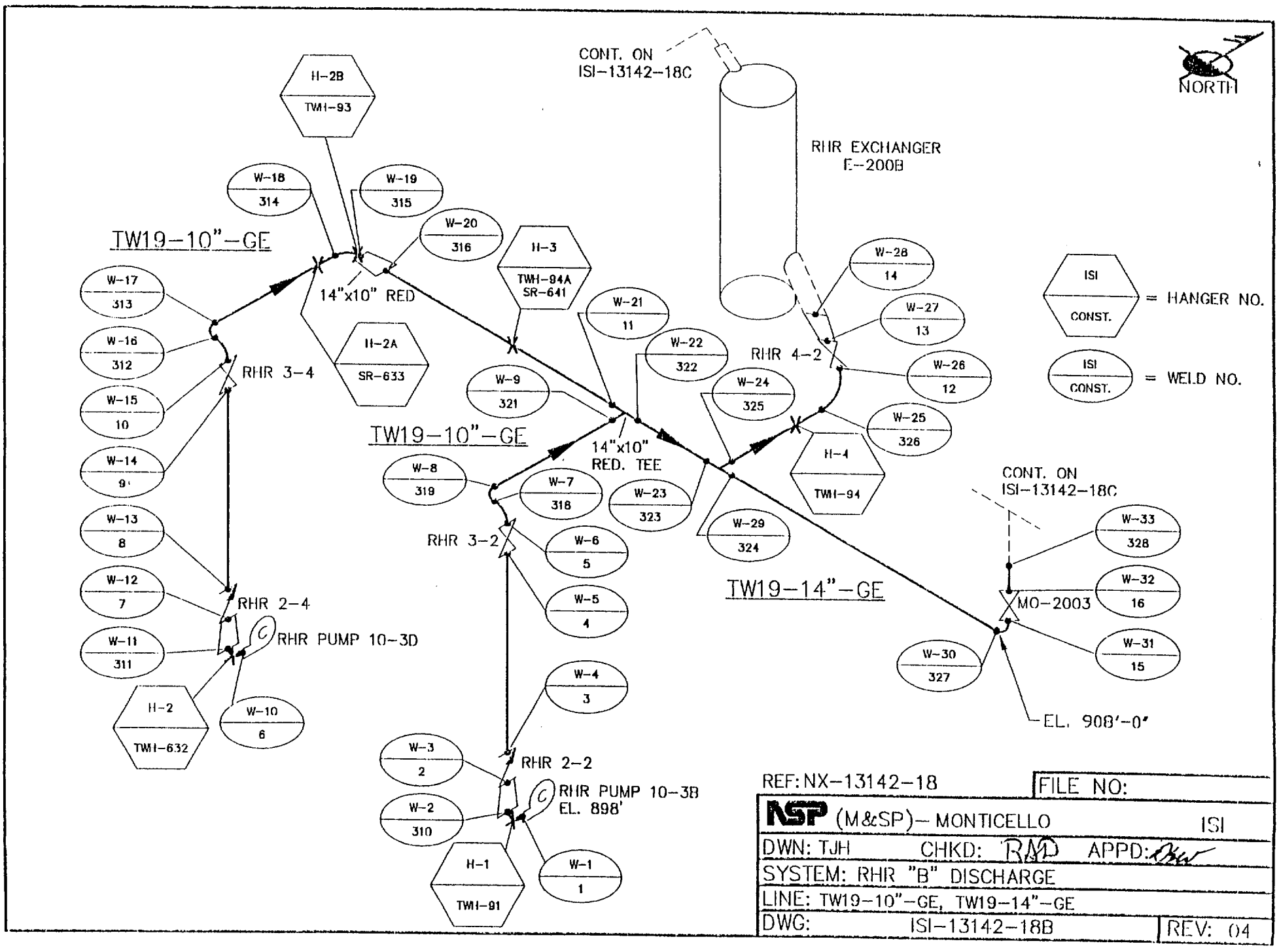

REF: NX-13142-18 | FILE NO:

NSP (M&SP)– MONTICELLO ISI

DWN: TJH CHKD: RMD APPD:

SYSTEM: RHR "B" DISCHARGE

LINE: TW19-10"-GE, TW19-14"-GE

DWG: ISI-13142-18B REV: 04

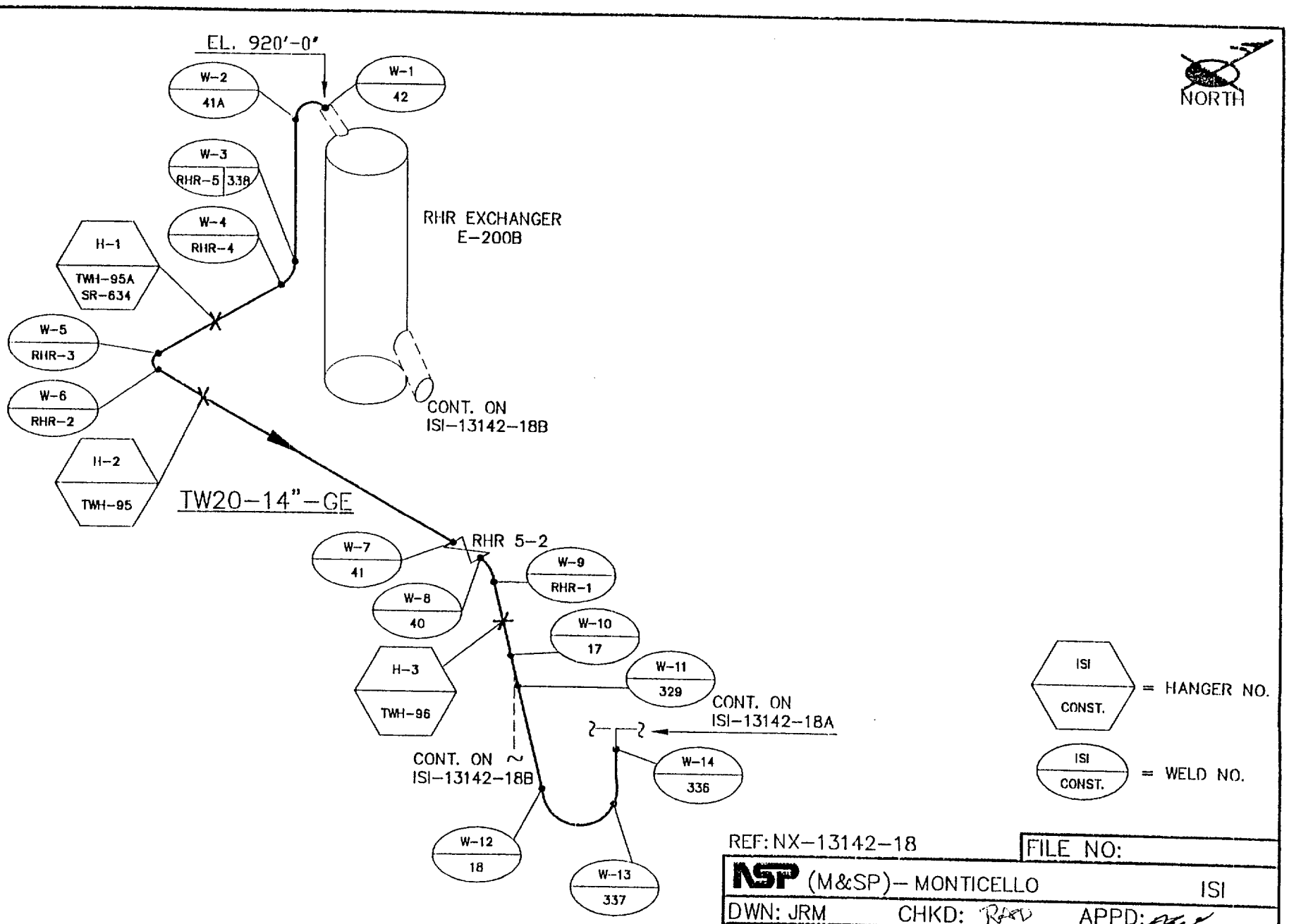

REF: NX-13142-18

FILE NO:	
NSP (M&SP)– MONTICELLO	ISI
DWN: JRM CHKD: RHD APPD:	
SYSTEM: RHR "B" DISCHARGE	
LINE: TW20-14"-GE	
DWG: ISI-13142-18C	REV: 02

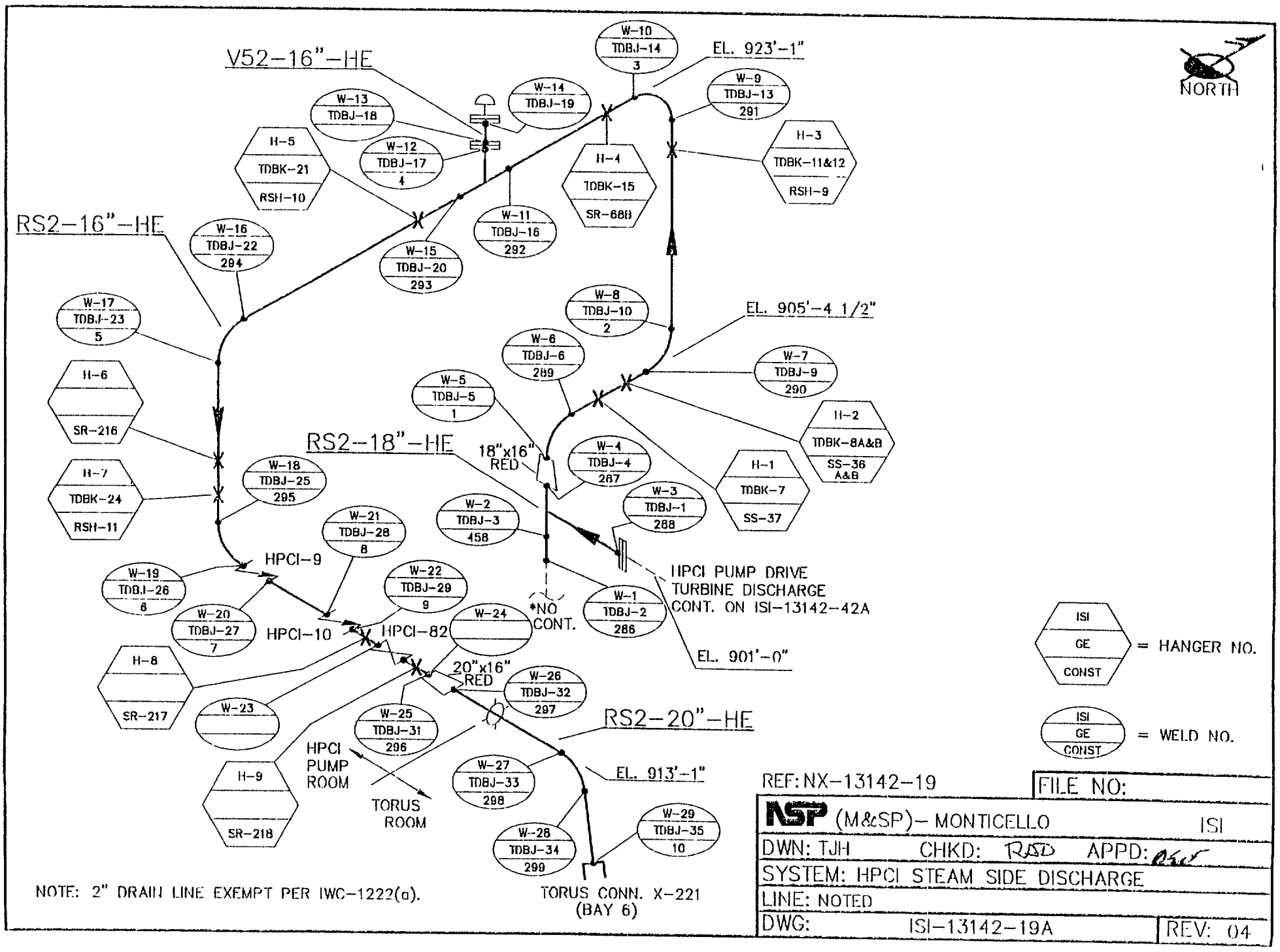

NOTE: 2" DRAIN LINE EXEMPT PER IWC-1222(a).

REF: NX-13142-19

FILE NO:

NSP (M&SP)- MONTICELLO ISI

DWN: TJH CHKD: RJD APPD: [illegible]

SYSTEM: HPCI STEAM SIDE DISCHARGE

LINE: NOTED

DWG: ISI-13142-19A REV: 04

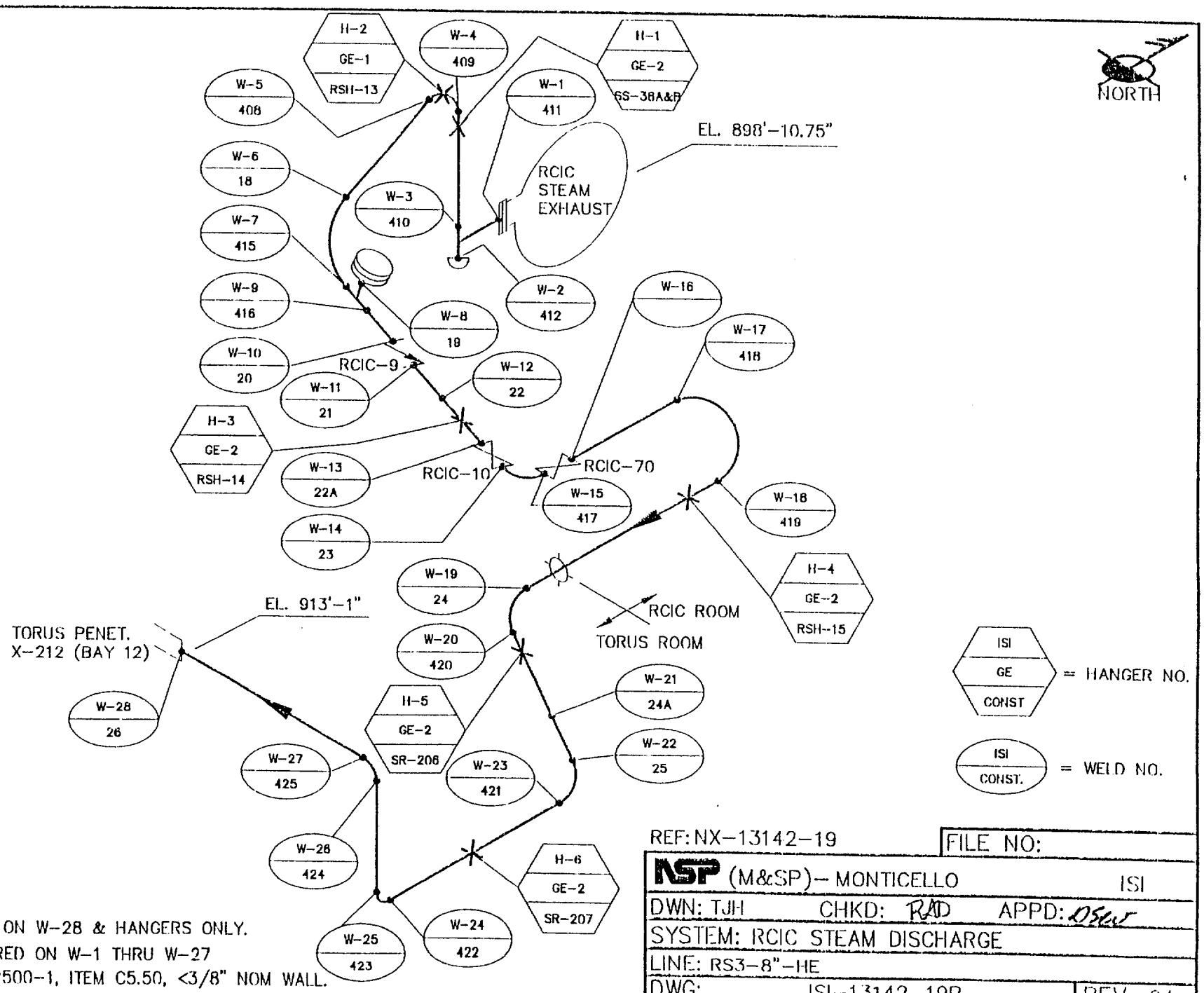

NOTE:

EXAMS REQUIRED ON W-28 & HANGERS ONLY.
NO EXAMS REQUIRED ON W-1 THRU W-27
PER TABLE IWC-2500-1, ITEM C5.50, <3/8" NOM WALL.

REF: NX-13142-19

FILE NO:	
NSP (M&SP)- MONTICELLO	ISI
DWN: TJH CHKD: RAD APPD: DSW	
SYSTEM: RCIC STEAM DISCHARGE	
LINE: RS3-8"-HE	
DWG: ISI-13142-19B	REV: 04

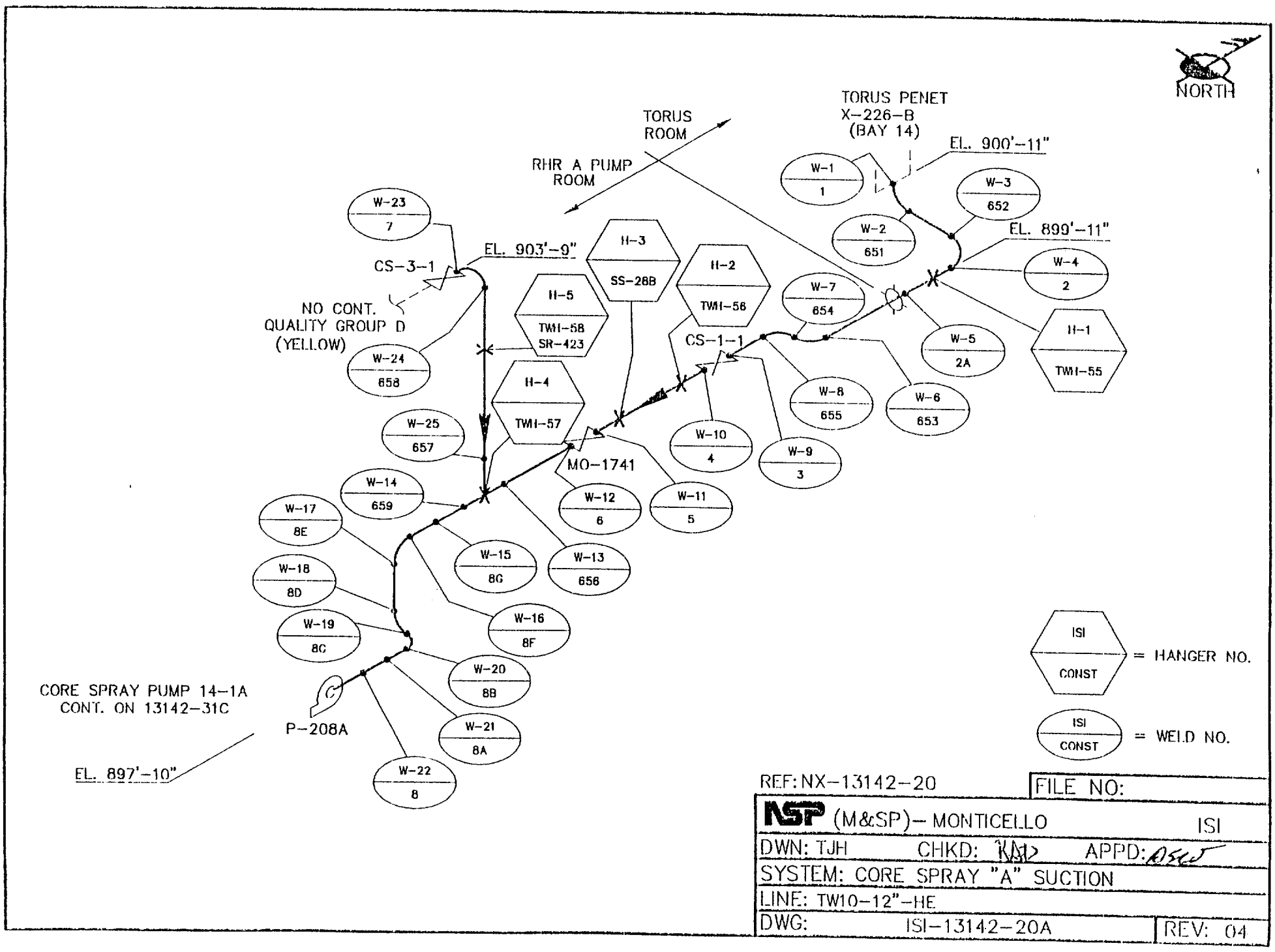

REF: NX-13142-20

FILE NO:

NSP (M&SP)- MONTICELLO ISI

DWN: TJH CHKD: KAD APPD: ASKJ

SYSTEM: CORE SPRAY "A" SUCTION

LINE: TW10-12"-HE

DWG: ISI-13142-20A REV: 04

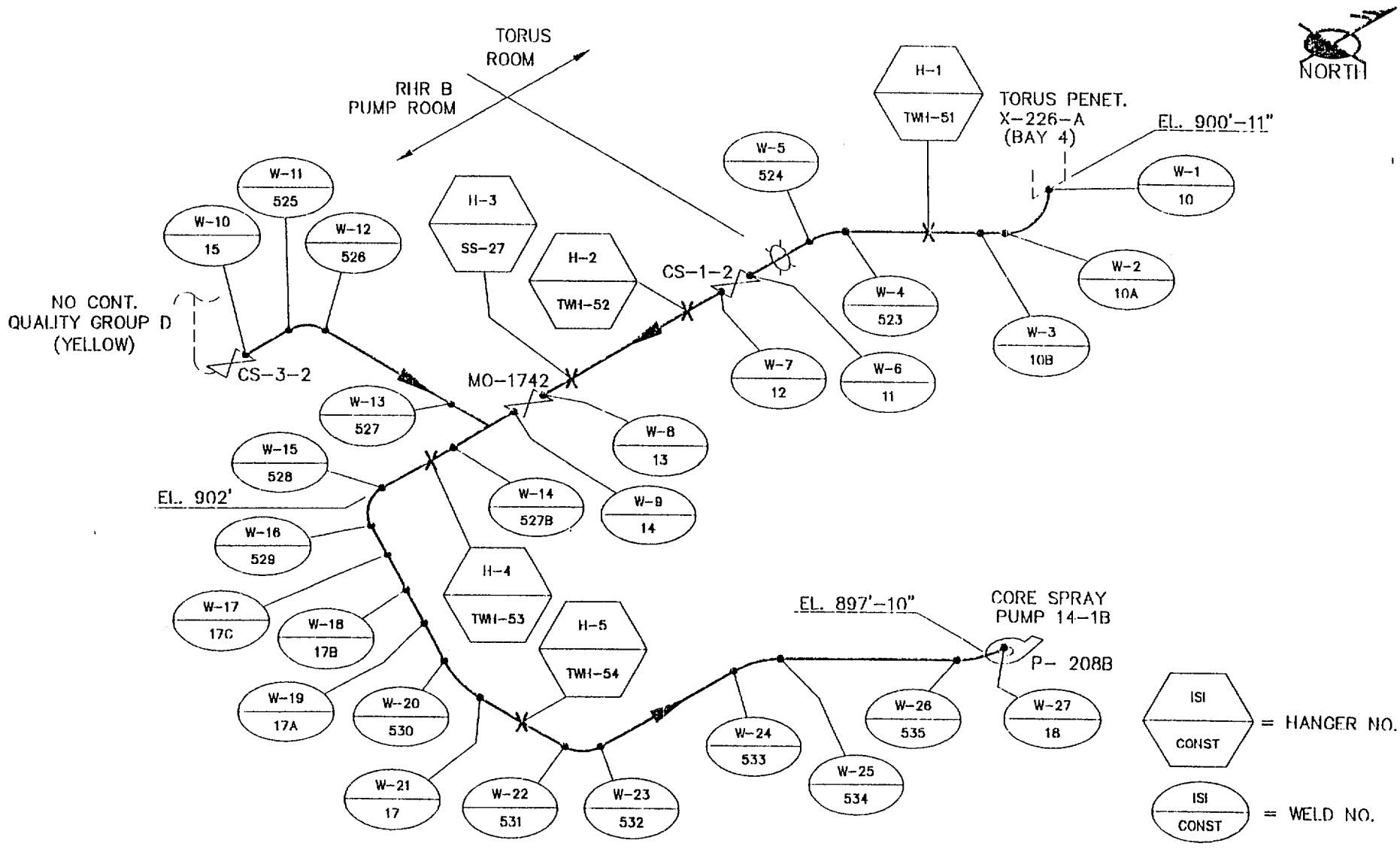

REF: NX-13142-20 | FILE NO:

NSP (M&SP)-- MONTICELLO ISI

DWN: TJH CHKD: RJD APPD:

SYSTEM: CORE SPRAY "B" SUCTION

LINE: TW6-12"-HE

DWG: ISI-13142-20B | REV: 04

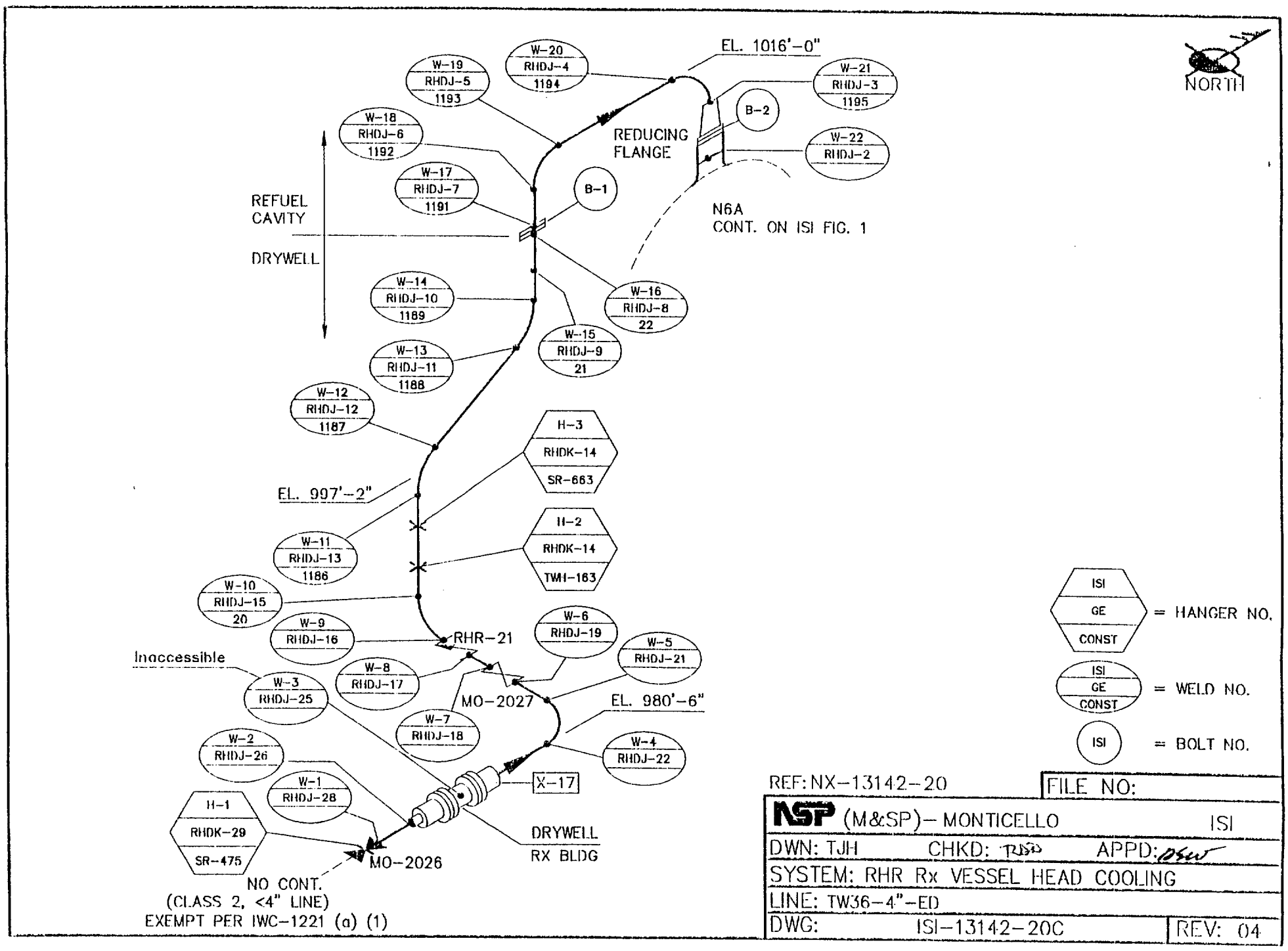

REF: NX-13142-20 | FILE NO:

NSP (M&SP)- MONTICELLO ISI

DWN: TJH CHKD: APPD:

SYSTEM: RHR Rx VESSEL HEAD COOLING

LINE: TW36-4"-ED

DWG: ISI-13142-20C | REV: 04

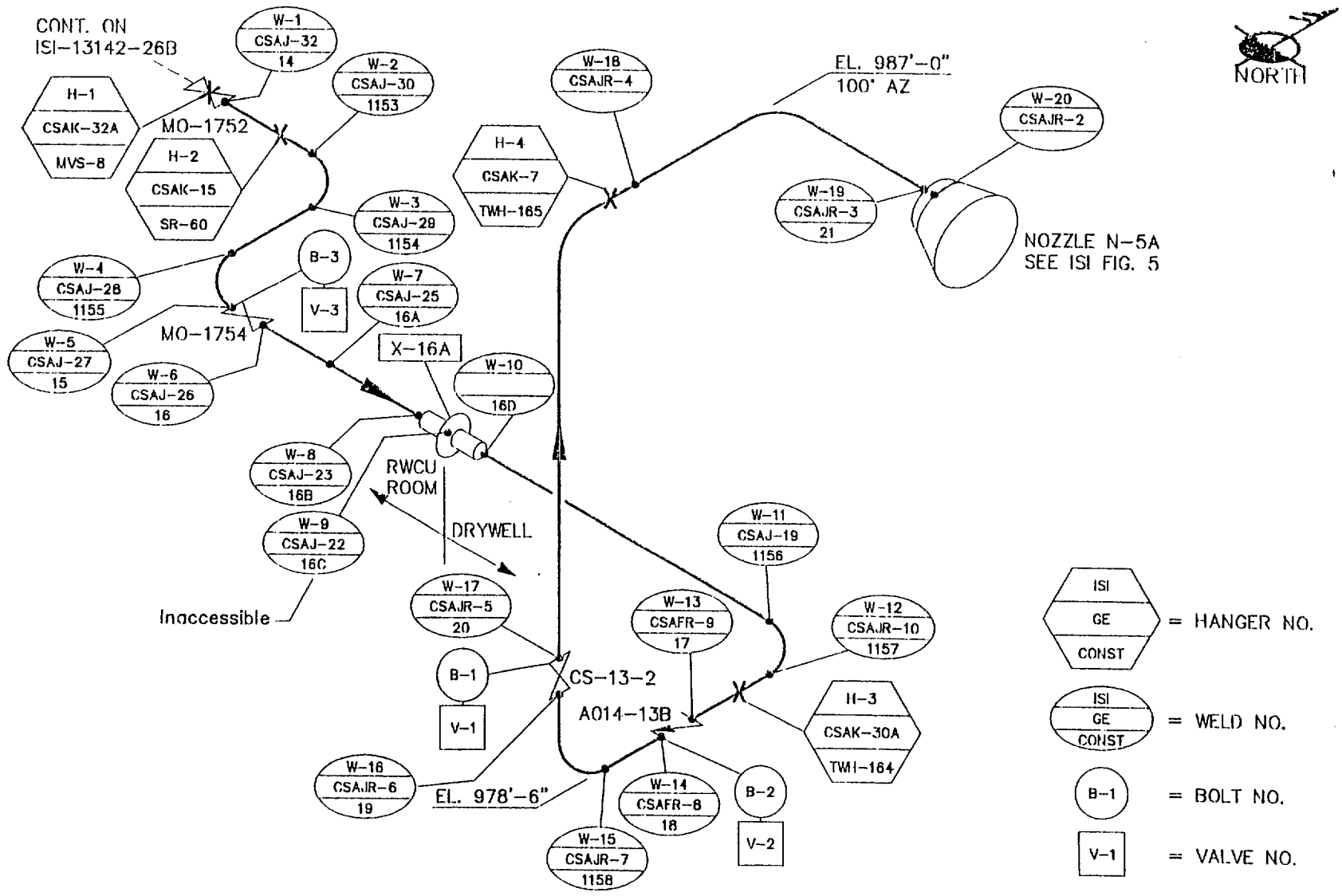

REF: NX-13142-26 | FILE NO:

NSP (M&SP)– MONTICELLO ISI

DWN: TJH CHKD: RAD APPD: DSW

SYSTEM: CORE SPRAY "B" DISCHARGE

LINE: TW7-8"-ED

DWG: ISI-13142-26A | REV: 04

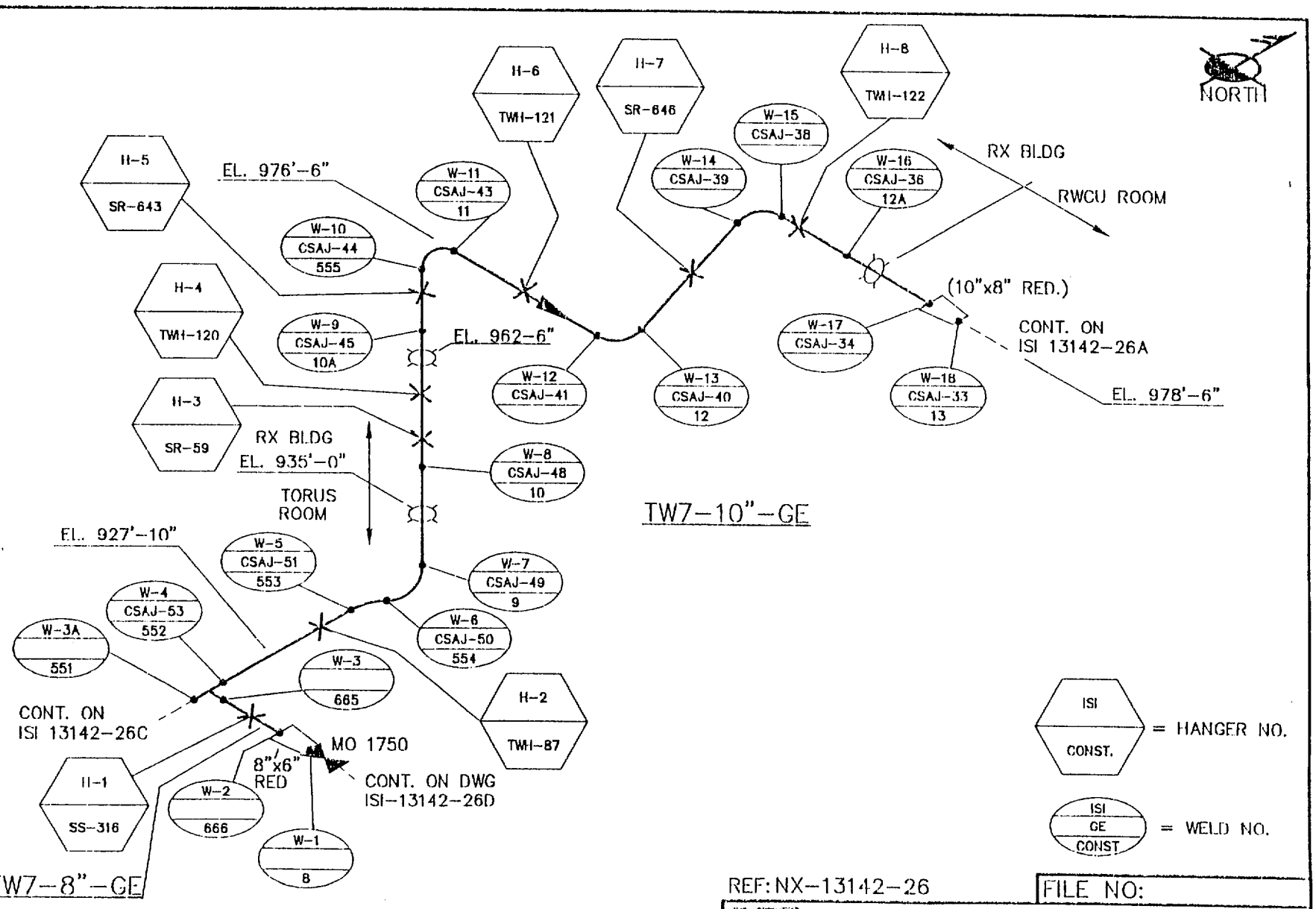

NOTE:

EXAMS REQUIRED ON HANGERS ONLY.

NO EXAMS REQUIRED ON WELDS PER TABLE IWC-2500-1, ITEM C5.50, <3/8" NOM WALL.

REF: NX-13142-26	FILE NO:
NSP (M&SP)-- MONTICELLO	ISI
DWN: TJH CHKD: RAD APPD: DFW	
SYSTEM: CORE SPRAY "B" DISCHARGE	
LINE: TW7-8"-GE ; TW7-10"-GE	
DWG: ISI 13142-26B	REV: 04

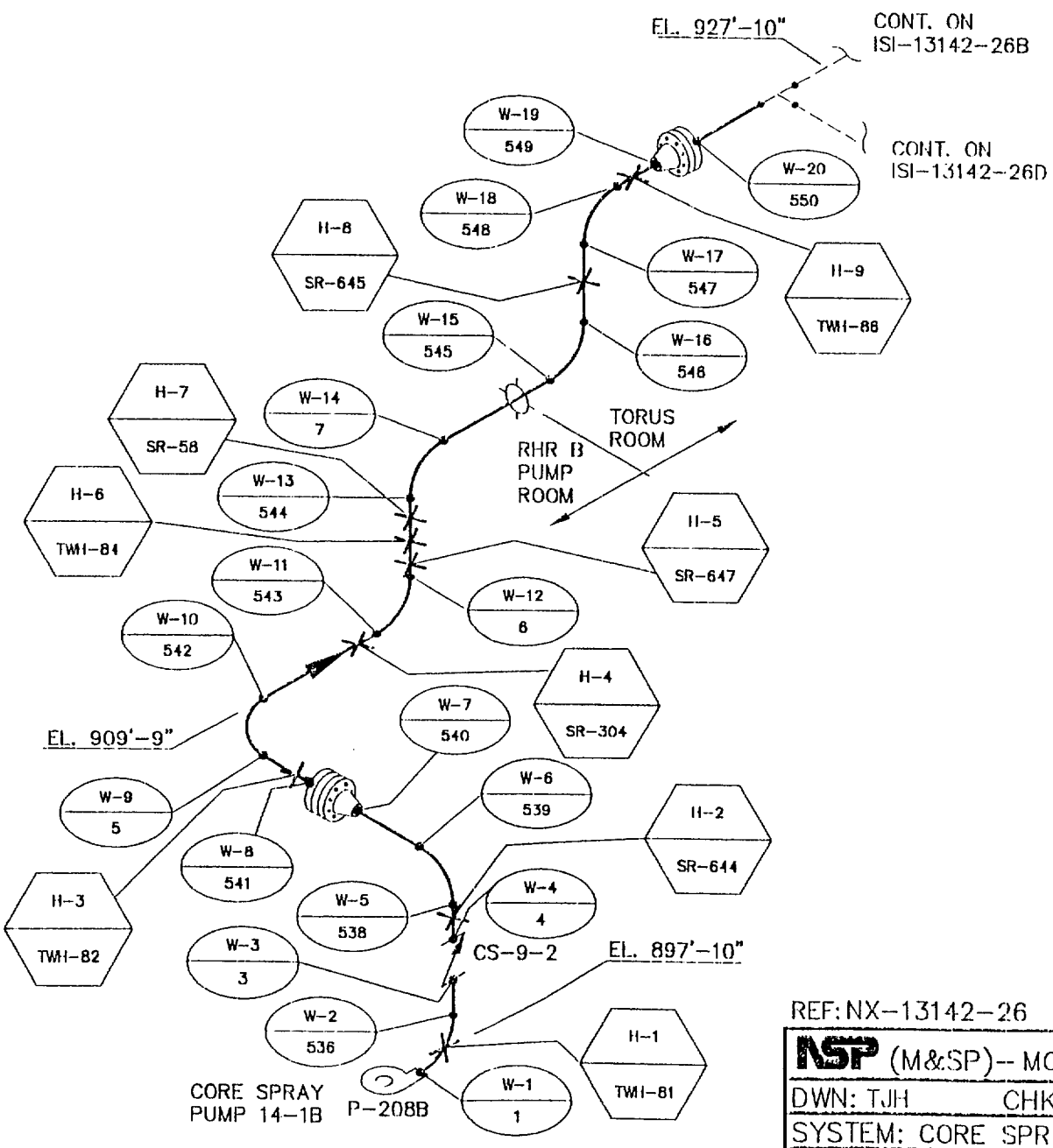

ISI / CONST = HANGER NO.

ISI / CONST = WELD NO.

NOTE:

EXAMS REQUIRED ON HANGERS ONLY.

NO EXAMS REQUIRED ON WELDS PER TABLE IWC-2500-1, ITEM C5.50, <3/8" NOM WALL.

REF: NX-13142-26

FILE NO:

NSP (M&SP)-- MONTICELLO ISI

DWN: TJH CHKD: RAD APPD:

SYSTEM: CORE SPRAY "B" DISCHARGE

LINE: TW7-10"-GE

DWG: ISI-13142-26C REV: 04

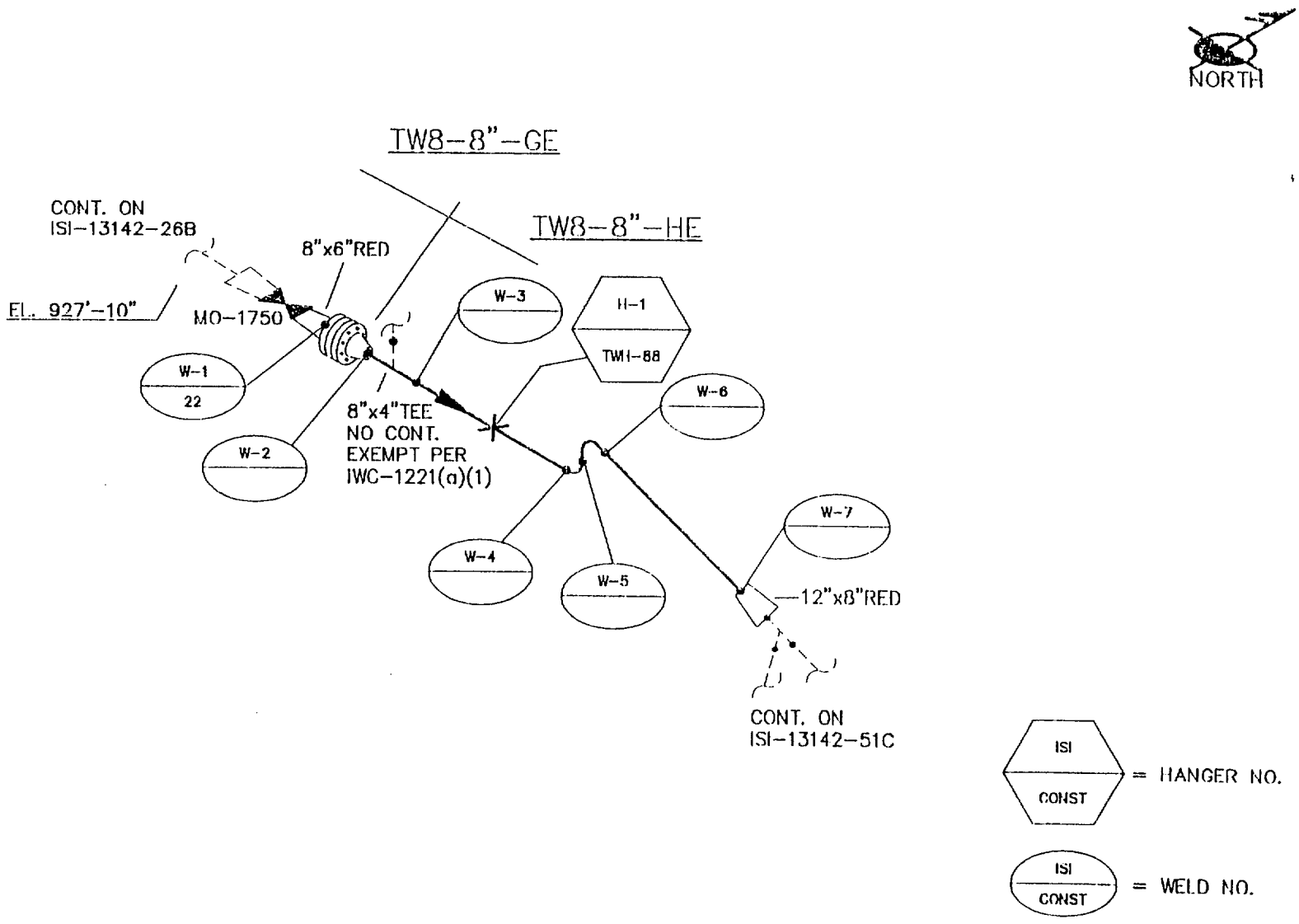

NOTE:

EXAMS REQUIRED ON HANGERS ONLY.

NO EXAMS REQUIRED ON WELDS PER TABLE IWC-2500-1, ITEM C5.50, <3/8" NOM WALL.

REF: NX-13142-26	FILE NO:
NSP (M&SP)- MONTICELLO	ISI
DWN: TJH CHKD: RAD APPD: DEW	
SYSTEM: CORE SPRAY "B" DISCHARGE	
LINE: TW8-8"-HE & TW8-8"-GE	
DWG: ISI-13142-26D	REV: 00

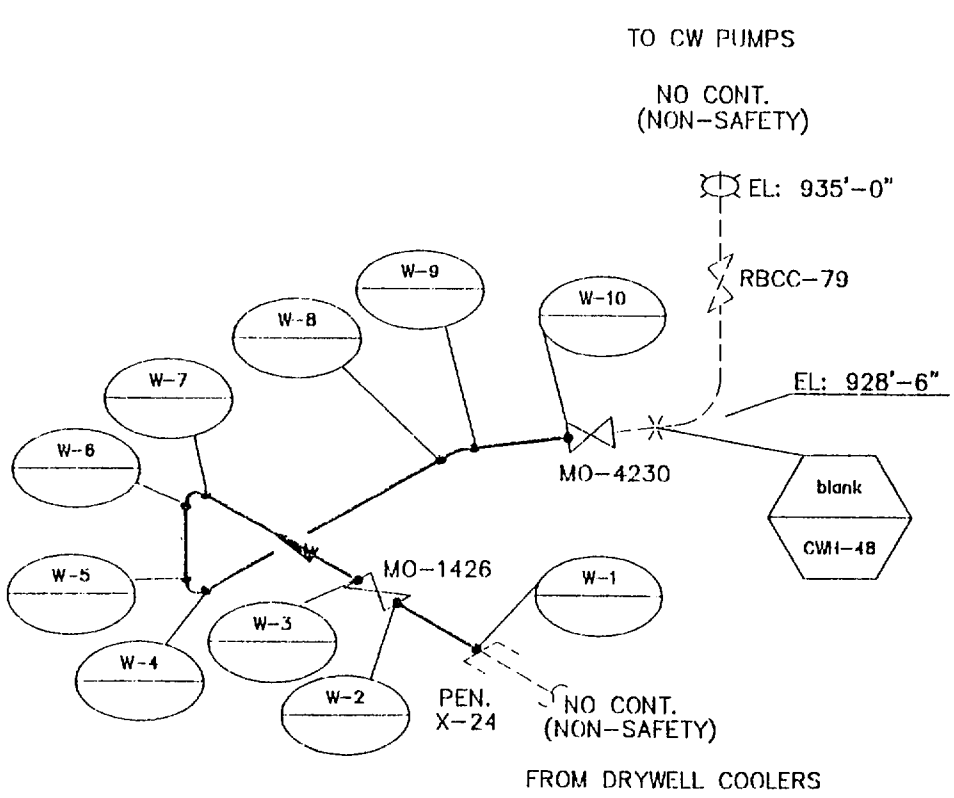

CW4-8"-HF

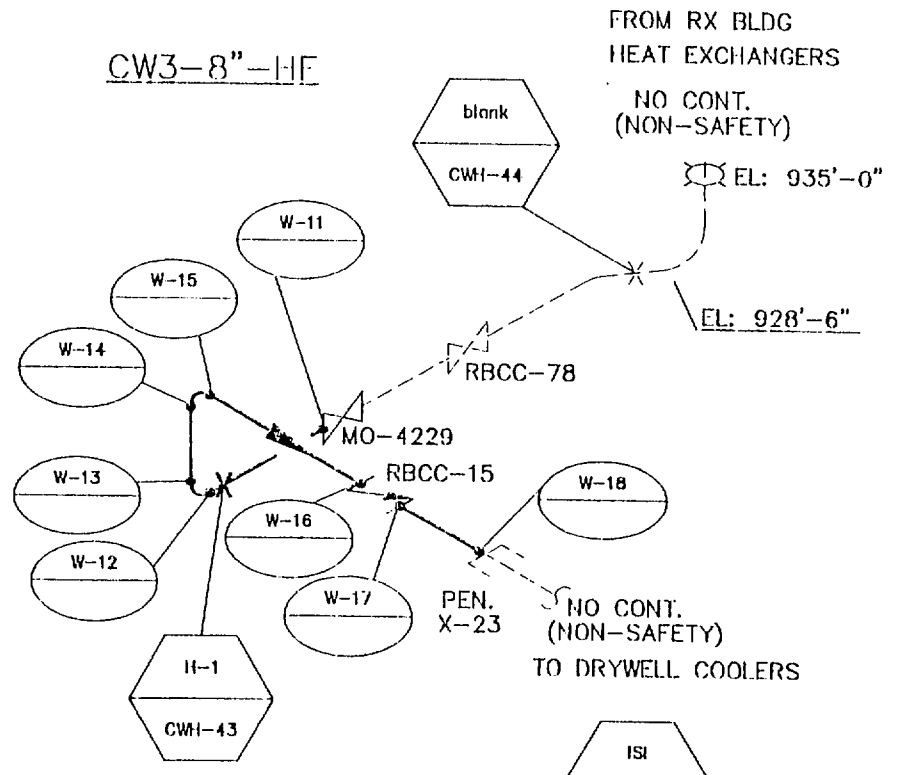

ISI / CONST. = HANGER NO.

ISI / CONST. = WELD NO.

NH-36042-2
NX-13142-29
REF: NX-13142-38

NOTE:

EXAMS REQUIRED ON HANGERS ONLY.
NO EXAMS REQUIRED ON WELDS PER TABLE IWC-2500-1, ITEM C5.50, <3/8" NOM WALL.

FILE NO: 3129AR00		
NSP (M&SP)-- MONTICELLO		ISI
DWN: TJH	CHKD: RAD	APPD: DSW
SYSTEM: RX BLDG COOLING WATER		
LINE: CW4-8"-HF & CW3-8"-HF		
DWG: ISI-13142-29A		REV: 01

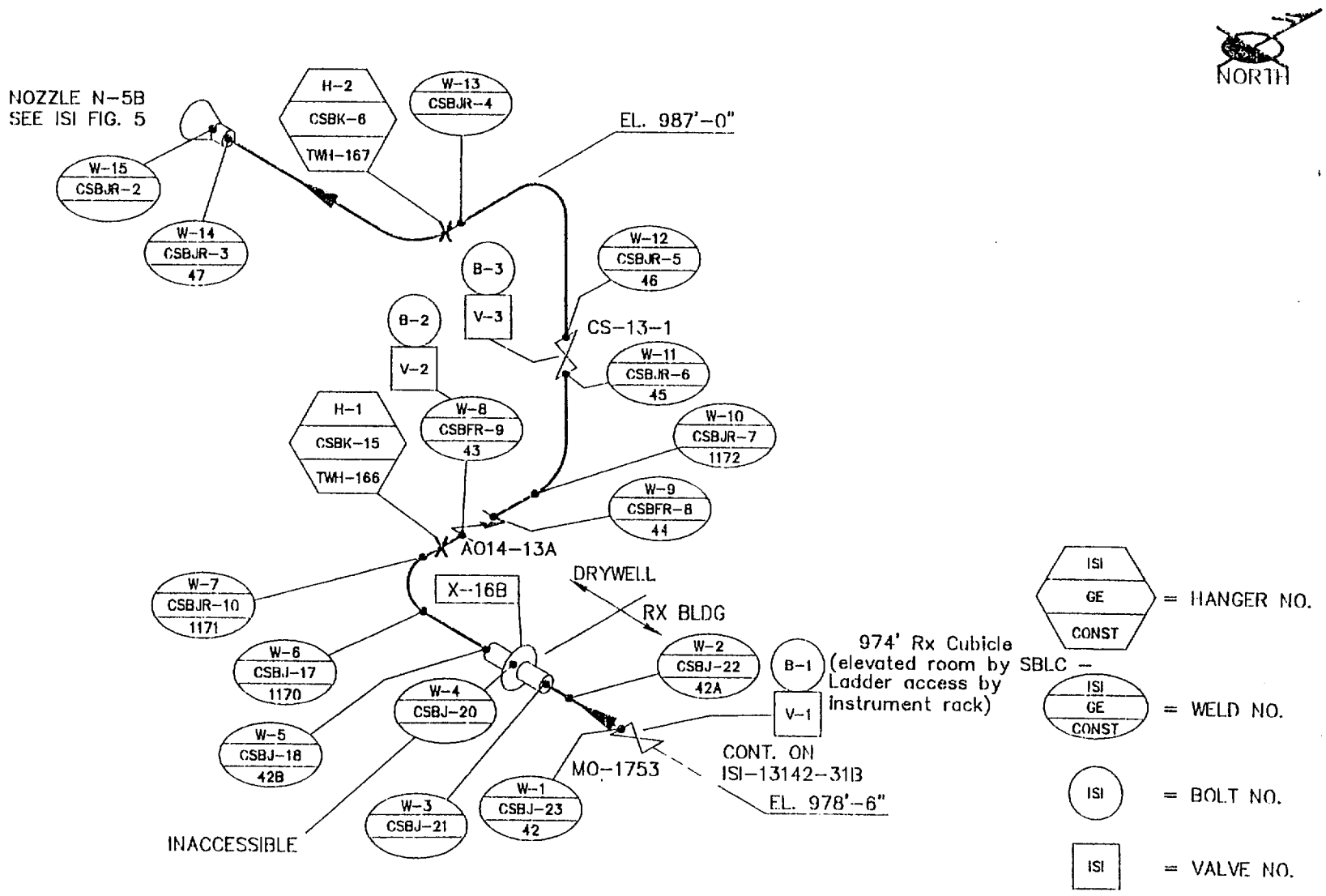

REF: NX-13142-31 | FILE NO:

NSP (M&SP)- MONTICELLO ISI

DWN: TJH CHKD: RAJ APPD: DRV

SYSTEM: CORE SPRAY "A" DISCHARGE

LINE: TW11-8"-ED

DWG: ISI-13142-31A | REV: 04

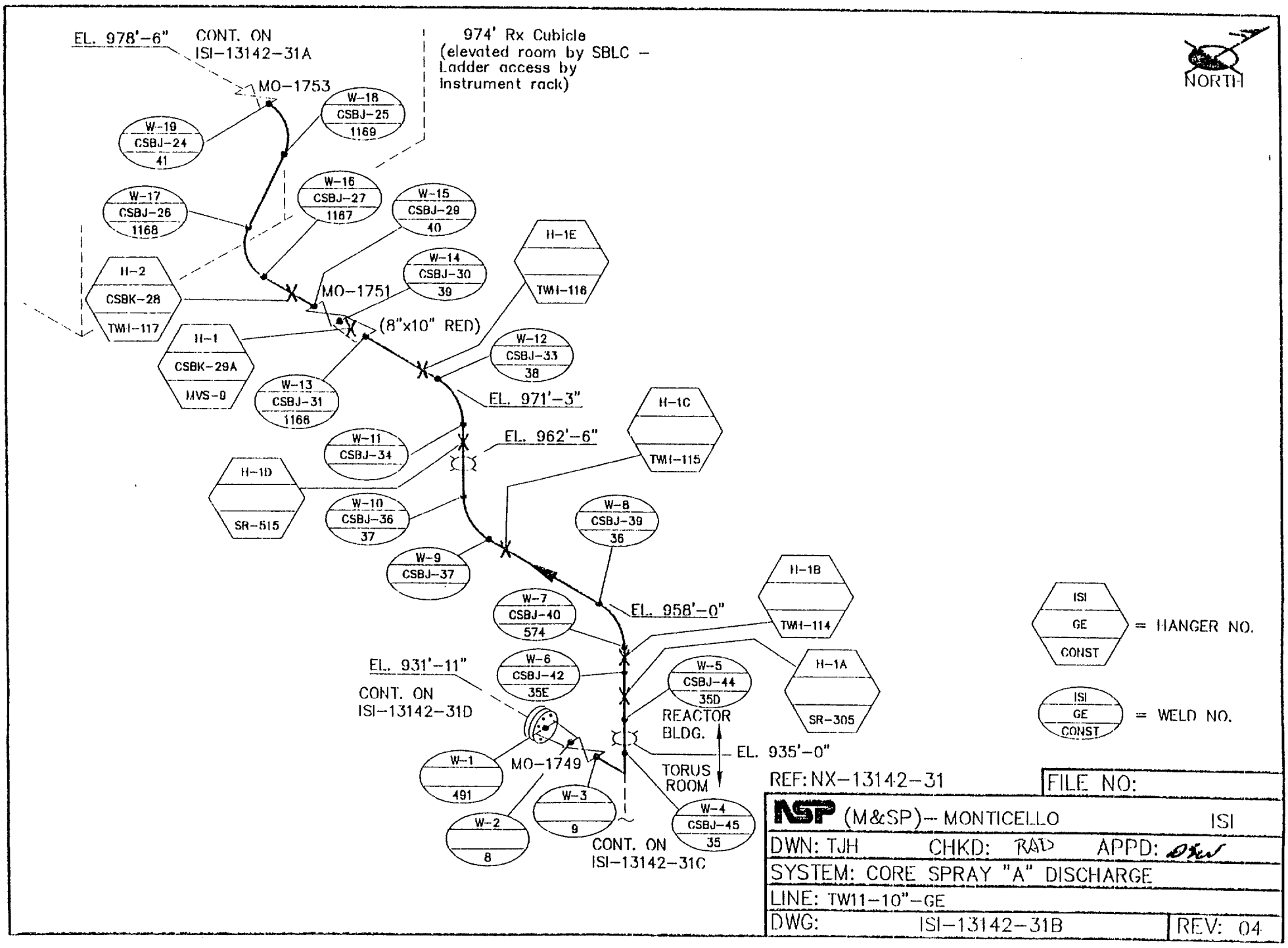

REF: NX-13142-31

FILE NO:

NSP (M&SP)-- MONTICELLO ISI

DWN: TJH CHKD: RAD APPD:

SYSTEM: CORE SPRAY "A" DISCHARGE

LINE: TW11-10"-GE

DWG: ISI-13142-31B REV: 04

NOTE:

EXAMS REQUIRED ON HANGERS ONLY.

NO EXAMS REQUIRED ON WELDS PER TABLE IWC-2500-1, ITEM C5.50. <3/8" NOM WALL.

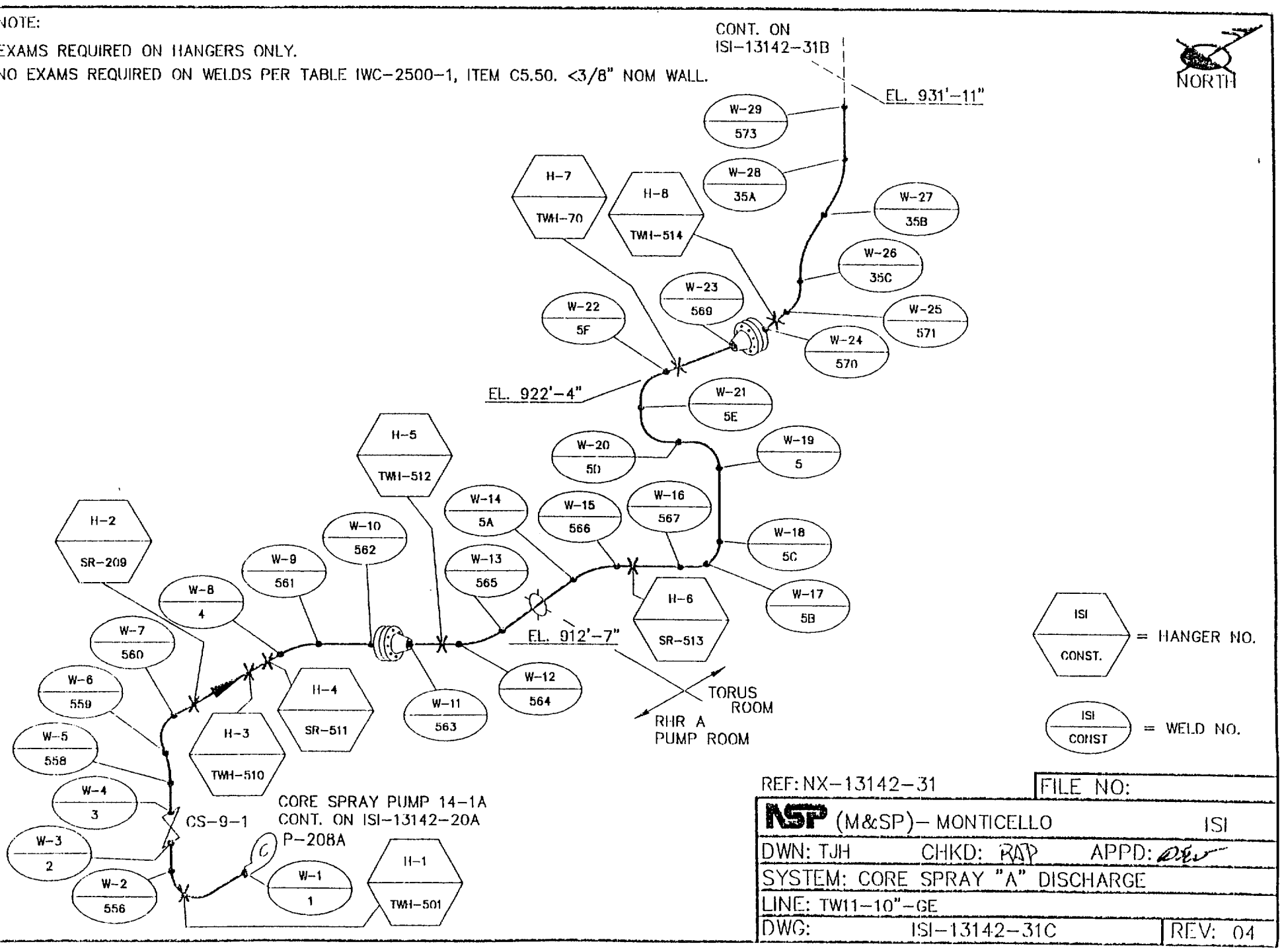

REF: NX-13142-31

FILE NO:

NSP (M&SP)- MONTICELLO ISI

DWN: TJH CHKD: RAP APPD:

SYSTEM: CORE SPRAY "A" DISCHARGE

LINE: TW11-10"-GE

DWG: ISI-13142-31C REV: 04

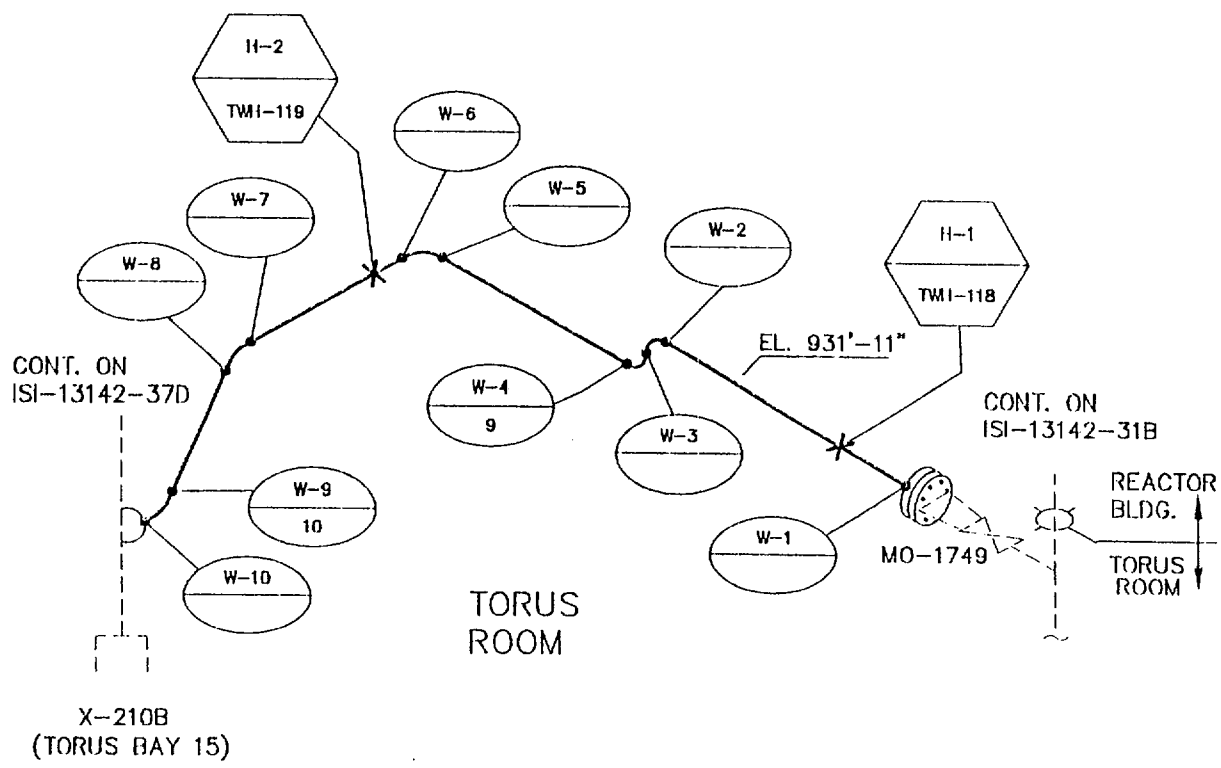

ISI / CONST. = HANGER NO.

ISI / CONST = WELD NO.

NOTE:

EXAMS REQUIRED ON HANGERS ONLY.

NO EXAMS REQUIRED ON WELDS PER TABLE IWC-2500-1, ITEM C5.50, <3/8" NOM WALL.

REF: NX-13142-31

FILE NO:

NSP (M&SP)- MONTICELLO ISI

DWN: TJH CHKD: RMD APPD: [illegible]

SYSTEM: CORE SPRAY "A" DISCHARGE

LINE: TW12-8"-HE

DWG: ISI-13142-31D REV: 00

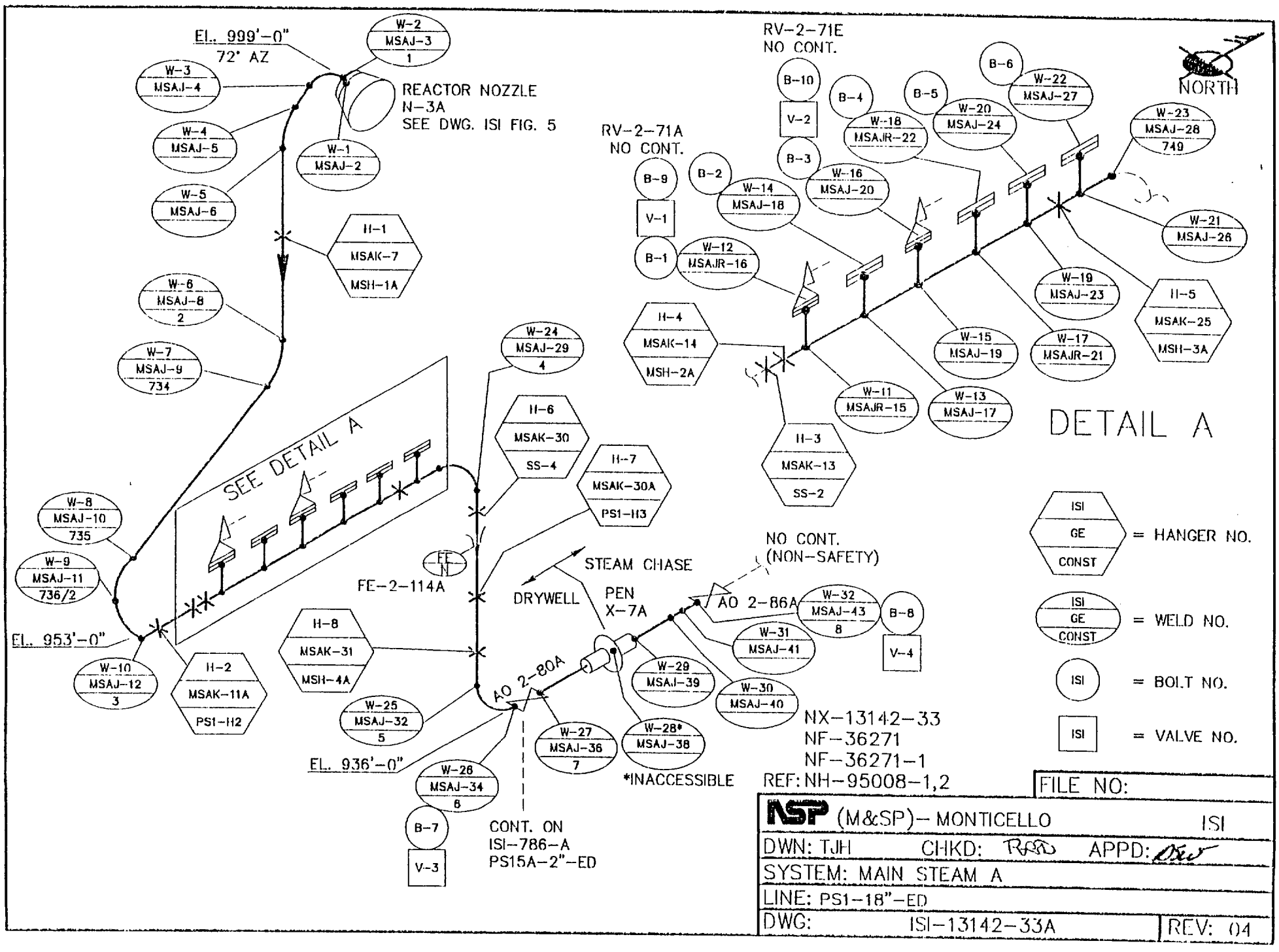
EL. 999'-0"
72° AZ
REACTOR NOZZLE
N-3A
SEE DWG. ISI FIG. 5
W-2 MSAJ-3 1
W-3 MSAJ-4
W-4 MSAJ-5
W-5 MSAJ-6
W-1 MSAJ-2
H-1 MSAK-7 MSH-1A
W-6 MSAJ-8 2
W-7 MSAJ-9 734
W-8 MSAJ-10 735
W-9 MSAJ-11 736/2
W-10 MSAJ-12 3
EL. 953'-0"
H-2 MSAK-11A PS1-H2
SEE DETAIL A
W-24 MSAJ-29 4
H-6 MSAK-30 SS-4
H-7 MSAK-30A PS1-H3
FE N
FE-2-114A
H-8 MSAK-31 MSH-4A
W-25 MSAJ-32 5
EL. 936'-0"
W-26 MSAJ-34 6
B-7
V-3
CONT. ON
ISI-786-A
PS15A-2"-ED
AO 2-80A
STEAM CHASE
DRYWELL
PEN
X-7A
W-27 MSAJ-36 7
W-28* MSAJ-38
*INACCESSIBLE
W-29 MSAJ-39
W-30 MSAJ-40
W-31 MSAJ-41
AO 2-86A
NO CONT.
(NON-SAFETY)
W-32 MSAJ-43 8
B-8
V-4
NX-13142-33
NF-36271
NF-36271-1
REF: NH-95008-1,2
RV-2-71E
NO CONT.
B-10
V-2
B-3
B-4
B-5
B-6
W-18 MSAJR-22
W-20 MSAJ-24
W-22 MSAJ-27
W-23 MSAJ-28 749
RV-2-71A
NO CONT.
B-9
V-1
B-1
B-2
W-14 MSAJ-18
W-16 MSAJ-20
W-12 MSAJR-16
W-21 MSAJ-26
W-19 MSAJ-23
H-5 MSAK-25 MSH-3A
H-4 MSAK-14 MSH-2A
W-15 MSAJ-19
W-17 MSAJR-21
W-11 MSAJR-15
W-13 MSAJ-17
H-3 MSAK-13 SS-2
DETAIL A
NORTH
ISI GE CONST = HANGER NO.
ISI GE CONST = WELD NO.
ISI = BOLT NO.
ISI = VALVE NO.
FILE NO:
NSP (M&SP)- MONTICELLO
ISI
DWN: TJH
CHKD:
APPD:
SYSTEM: MAIN STEAM A
LINE: PS1-18"-ED
DWG: ISI-13142-33A
REV: 04

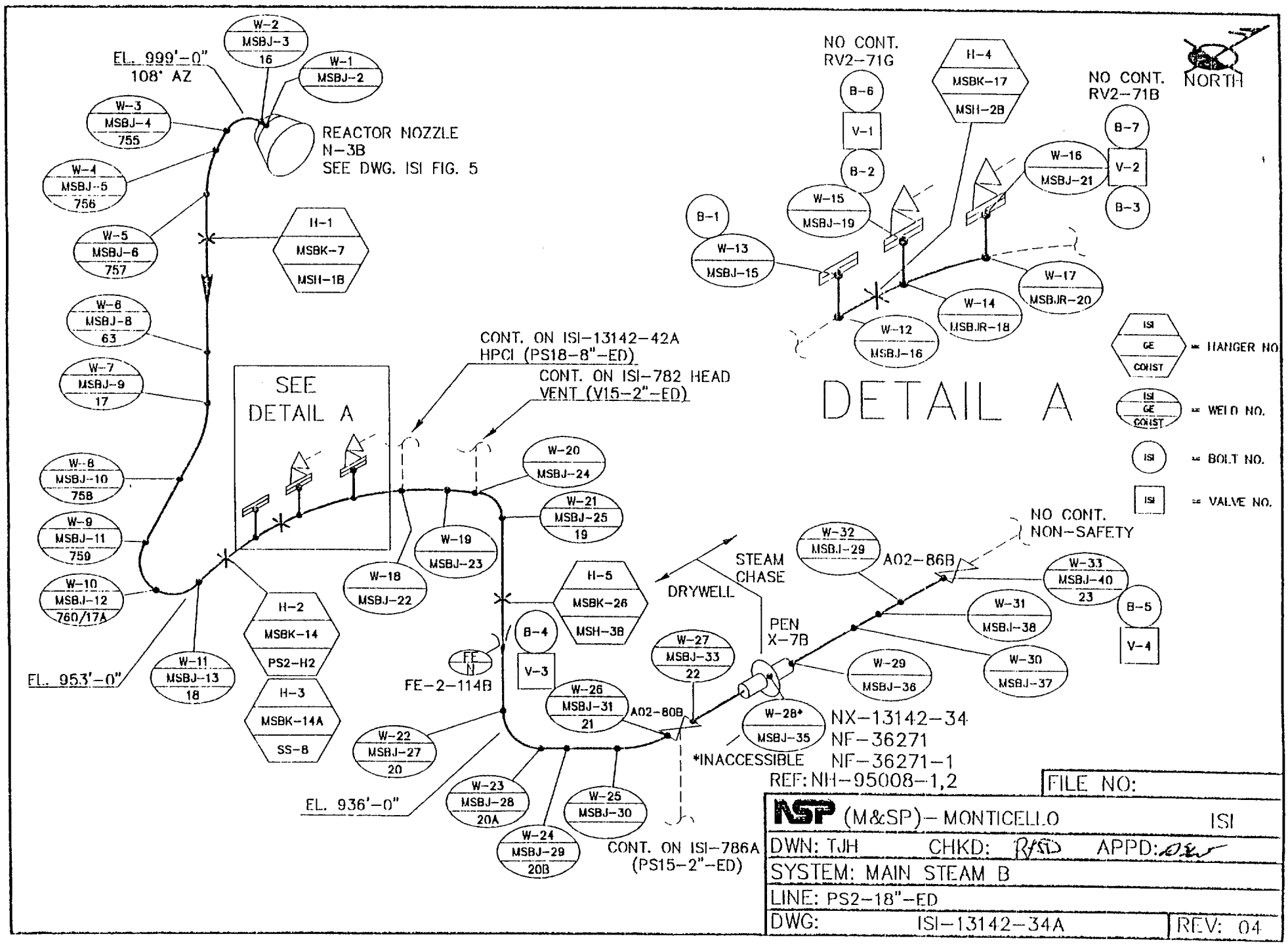
EL. 999'-0"
108° AZ
W-2 MSBJ-3 16
W-1 MSBJ-2
W-3 MSBJ-4 755
W-4 MSBJ-5 756
W-5 MSBJ-6 757
W-6 MSBJ-8 63
W-7 MSBJ-9 17
W-8 MSBJ-10 758
W-9 MSBJ-11 759
W-10 MSBJ-12 760/17A
W-11 MSBJ-13 18
EL. 953'-0"
REACTOR NOZZLE
N-3B
SEE DWG. ISI FIG. 5
H-1 MSBK-7 MSH-1B
SEE DETAIL A
H-2 MSBK-14 PS2-H2
H-3 MSBK-14A SS-8
W-18 MSBJ-22
W-19 MSBJ-23
W-20 MSBJ-24
W-21 MSBJ-25 19
CONT. ON ISI-13142-42A
HPCI (PS18-8"-ED)
CONT. ON ISI-782 HEAD
VENT (V15-2"-ED)
H-5 MSBK-26 MSH-3B
B-4
V-3
FE N
FE-2-114B
W-26 MSBJ-31 21
A02-80B
W-22 MSBJ-27 20
EL. 936'-0"
W-23 MSBJ-28 20A
W-24 MSBJ-29 20B
W-25 MSBJ-30
CONT. ON ISI-786A
(PS15-2"-ED)
DRYWELL
STEAM CHASE
PEN X-7B
W-27 MSBJ-33 22
W-28* MSBJ-35
*INACCESSIBLE
NX-13142-34
NF-36271
NF-36271-1
REF: NH-95008-1,2
W-32 MSBJ-29
A02-86B
NO CONT. NON-SAFETY
W-33 MSBJ-40 23
B-5
V-4
W-31 MSBJ-38
W-29 MSBJ-36
W-30 MSBJ-37
NO CONT. RV2-71G
B-6
V-1
B-2
H-4 MSBK-17 MSH-2B
W-15 MSBJ-19
B-1
W-13 MSBJ-15
W-12 MSBJ-16
W-14 MSBJR-18
W-17 MSBJR-20
NO CONT. RV2-71B
B-7
V-2
B-3
W-16 MSBJ-21
DETAIL A
NORTH
ISI GE CONST = HANGER NO.
ISI GE CONST = WELD NO.
ISI = BOLT NO.
ISI = VALVE NO.
FILE NO:
NSP (M&SP)- MONTICELLO
ISI
DWN: TJH
CHKD: RJSD
APPD:
SYSTEM: MAIN STEAM B
LINE: PS2-18"-ED
DWG: ISI-13142-34A
REV: 04

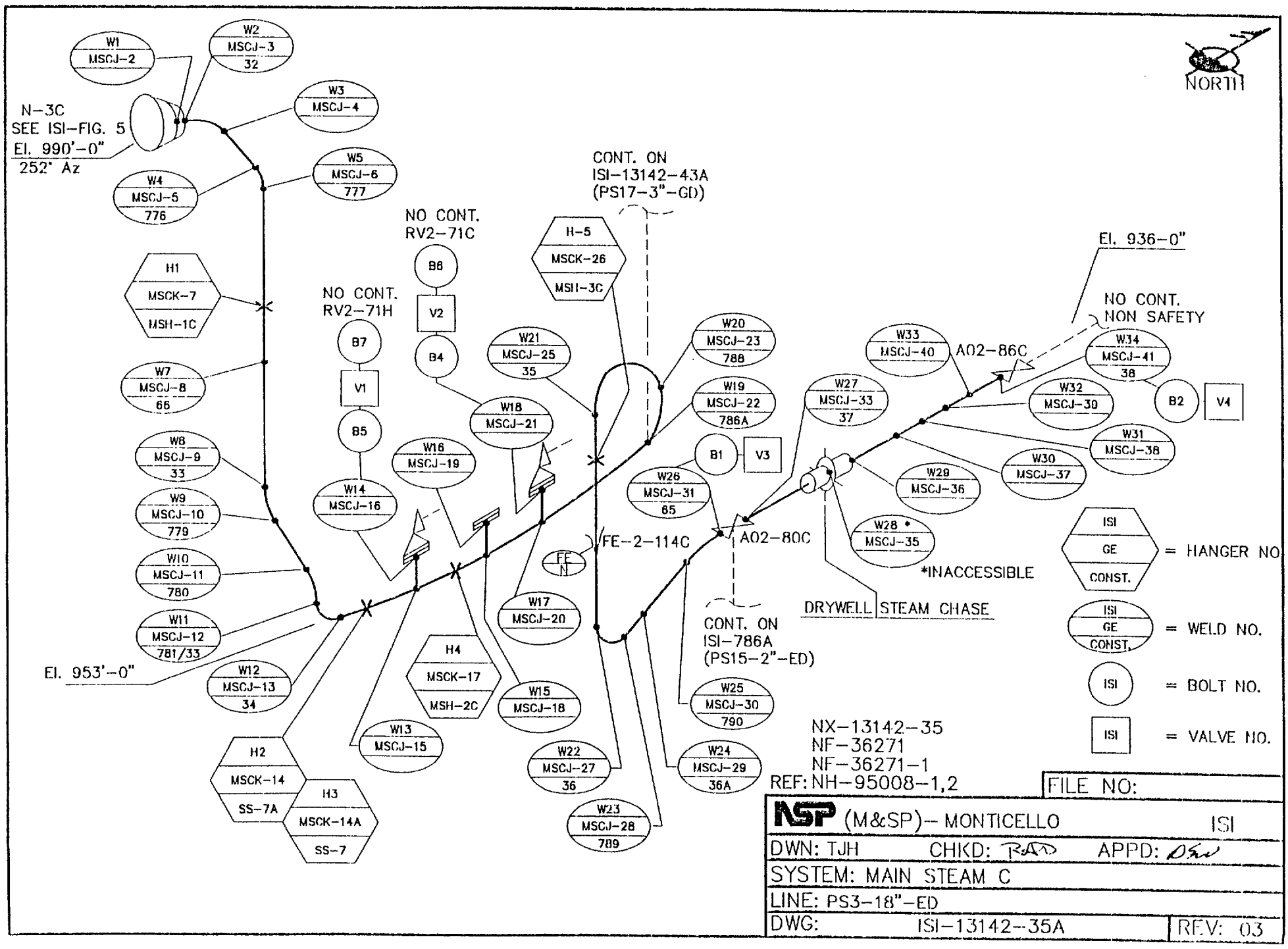
NORTH
N-3C
SEE ISI-FIG. 5
El. 990'-0"
252° Az
W1 MSCJ-2
W2 MSCJ-3 32
W3 MSCJ-4
W4 MSCJ-5 776
W5 MSCJ-6 777
H1 MSCK-7 MSH-1C
W7 MSCJ-8 66
W8 MSCJ-9 33
W9 MSCJ-10 779
W10 MSCJ-11 780
W11 MSCJ-12 781/33
W12 MSCJ-13 34
El. 953'-0"
H2 MSCK-14 SS-7A
H3 MSCK-14A SS-7
NO CONT.
RV2-71H
B7
V1
B5
W14 MSCJ-16
NO CONT.
RV2-71C
B6
V2
B4
W16 MSCJ-19
W13 MSCJ-15
H4 MSCK-17 MSH-2C
W18 MSCJ-21
W21 MSCJ-25 35
W17 MSCJ-20
W15 MSCJ-18
W22 MSCJ-27 36
W23 MSCJ-28 789
CONT. ON
ISI-13142-43A
(PS17-3"-GD)
H-5 MSCK-26 MSH-3C
FE-2-114C
FE N
W20 MSCJ-23 788
W19 MSCJ-22 786A
B1
V3
W26 MSCJ-31 65
A02-80C
CONT. ON
ISI-786A
(PS15-2"-ED)
W25 MSCJ-30 790
W24 MSCJ-29 36A
W27 MSCJ-33 37
W33 MSCJ-40
A02-86C
El. 936-0"
NO CONT.
NON SAFETY
W34 MSCJ-41 38
B2
V4
W32 MSCJ-39
W31 MSCJ-38
W30 MSCJ-37
W29 MSCJ-36
W28 * MSCJ-35
*INACCESSIBLE
DRYWELL
STEAM CHASE
ISI GE CONST. = HANGER NO.
ISI GE CONST. = WELD NO.
ISI = BOLT NO.
ISI = VALVE NO.
NX-13142-35
NF-36271
NF-36271-1
REF: NH-95008-1,2
FILE NO:
NSP (M&SP)-- MONTICELLO
ISI
DWN: TJH
CHKD:
APPD:
SYSTEM: MAIN STEAM C
LINE: PS3-18"-ED
DWG: ISI-13142-35A
REV: 03

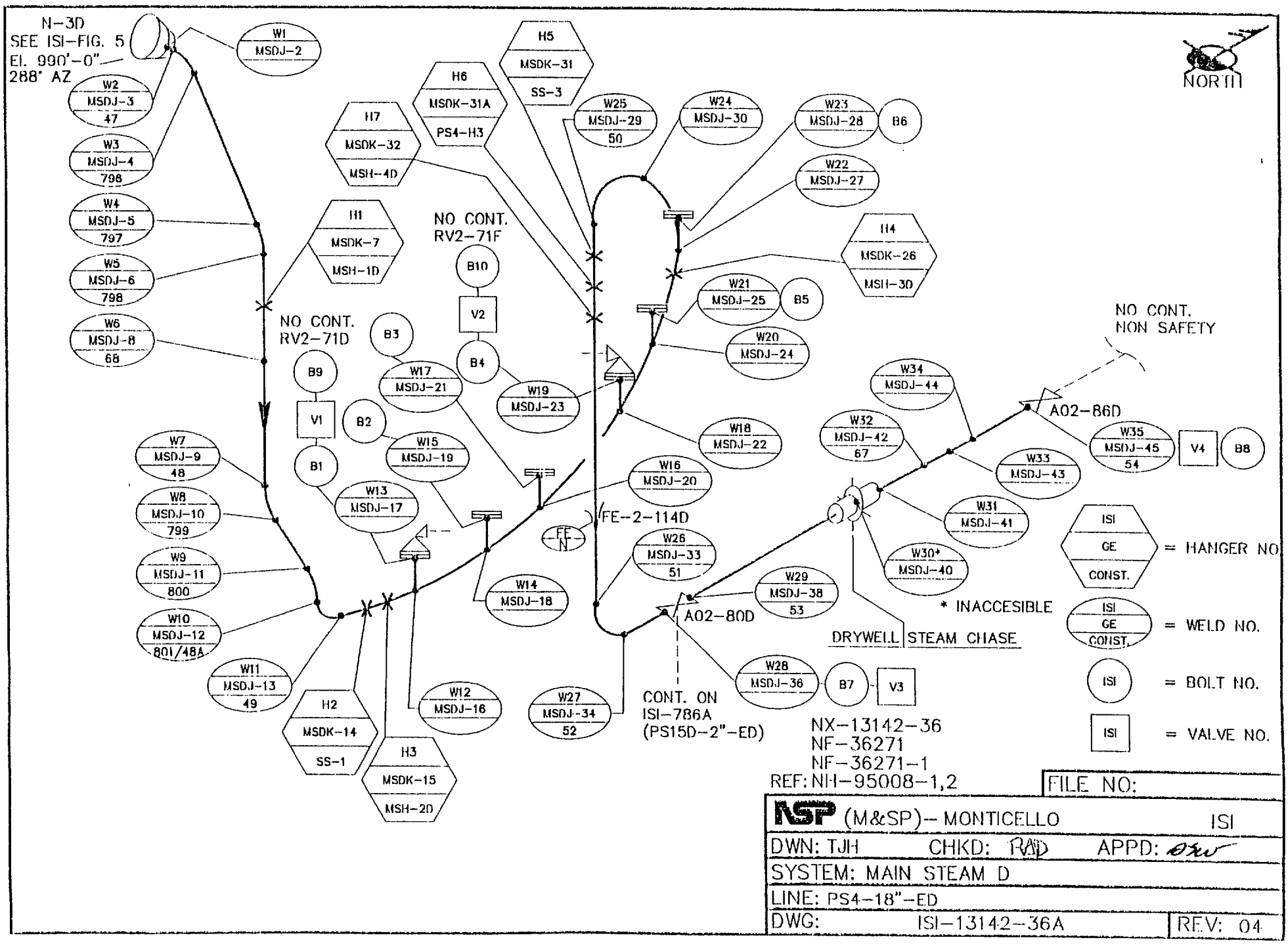
N-3D
SEE ISI-FIG. 5
El. 990'-0"
288° AZ
NORTH
W1 MSDJ-2
W2 MSDJ-3 47
W3 MSDJ-4 798
W4 MSDJ-5 797
W5 MSDJ-6 798
W6 MSDJ-8 68
W7 MSDJ-9 48
W8 MSDJ-10 799
W9 MSDJ-11 800
W10 MSDJ-12 801/48A
W11 MSDJ-13 49
W12 MSDJ-16
W13 MSDJ-17
W14 MSDJ-18
W15 MSDJ-19
W16 MSDJ-20
W17 MSDJ-21
W18 MSDJ-22
W19 MSDJ-23
W20 MSDJ-24
W21 MSDJ-25
W22 MSDJ-27
W23 MSDJ-28
W24 MSDJ-30
W25 MSDJ-29 50
W26 MSDJ-33 51
W27 MSDJ-34 52
W28 MSDJ-36
W29 MSDJ-38 53
W30* MSDJ-40
W31 MSDJ-41
W32 MSDJ-42 67
W33 MSDJ-43
W34 MSDJ-44
W35 MSDJ-45 54
H1 MSDK-7 MSH-1D
H2 MSDK-14 SS-1
H3 MSDK-15 MSH-2D
H4 MSDK-26 MSH-3D
H5 MSDK-31 SS-3
H6 MSDK-31A PS4-H3
H7 MSDK-32 MSH-4D
B1
B2
B3
B4
B5
B6
B7
B8
B9
B10
V1
V2
V3
V4
NO CONT. RV2-71D
NO CONT. RV2-71F
NO CONT. NON SAFETY
FE-2-114D
FE N
A02-80D
A02-86D
DRYWELL
STEAM CHASE
* INACCESIBLE
CONT. ON ISI-786A (PS15D-2"-ED)
NX-13142-36
NF-36271
NF-36271-1
REF: NH-95008-1,2
ISI GE CONST. = HANGER NO.
ISI GE CONST. = WELD NO.
ISI = BOLT NO.
ISI = VALVE NO.
FILE NO:
NSP (M&SP)-- MONTICELLO
ISI
DWN: TJH
CHKD: RAD
APPD:
SYSTEM: MAIN STEAM D
LINE: PS4-18"-ED
DWG: ISI-13142-36A
REV: 04

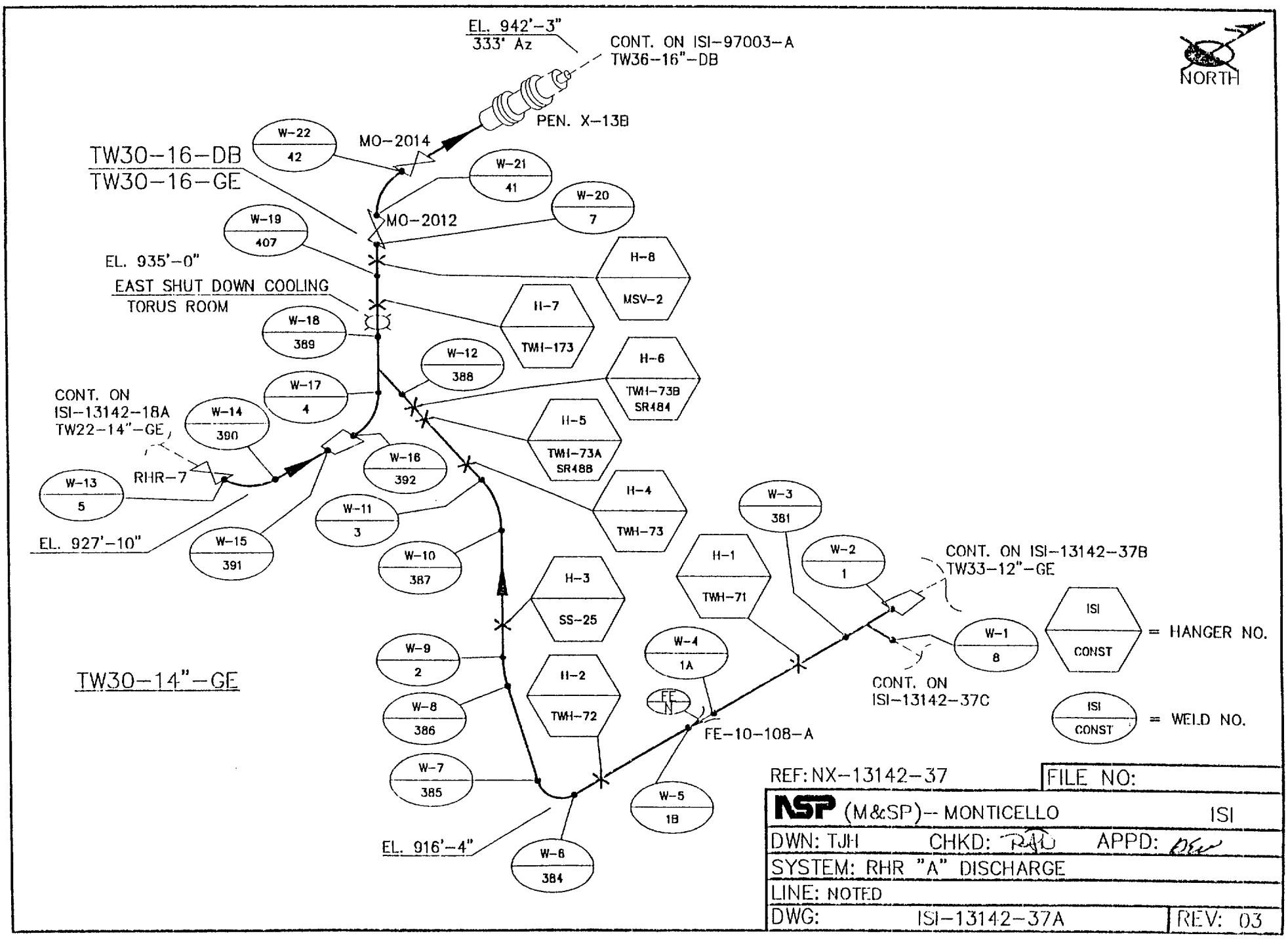

REF: NX-13142-37

FILE NO:

NSP (M&SP)-- MONTICELLO ISI

DWN: TJH CHKD: RAU APPD: DEW

SYSTEM: RHR "A" DISCHARGE

LINE: NOTED

DWG: ISI-13142-37A REV: 03

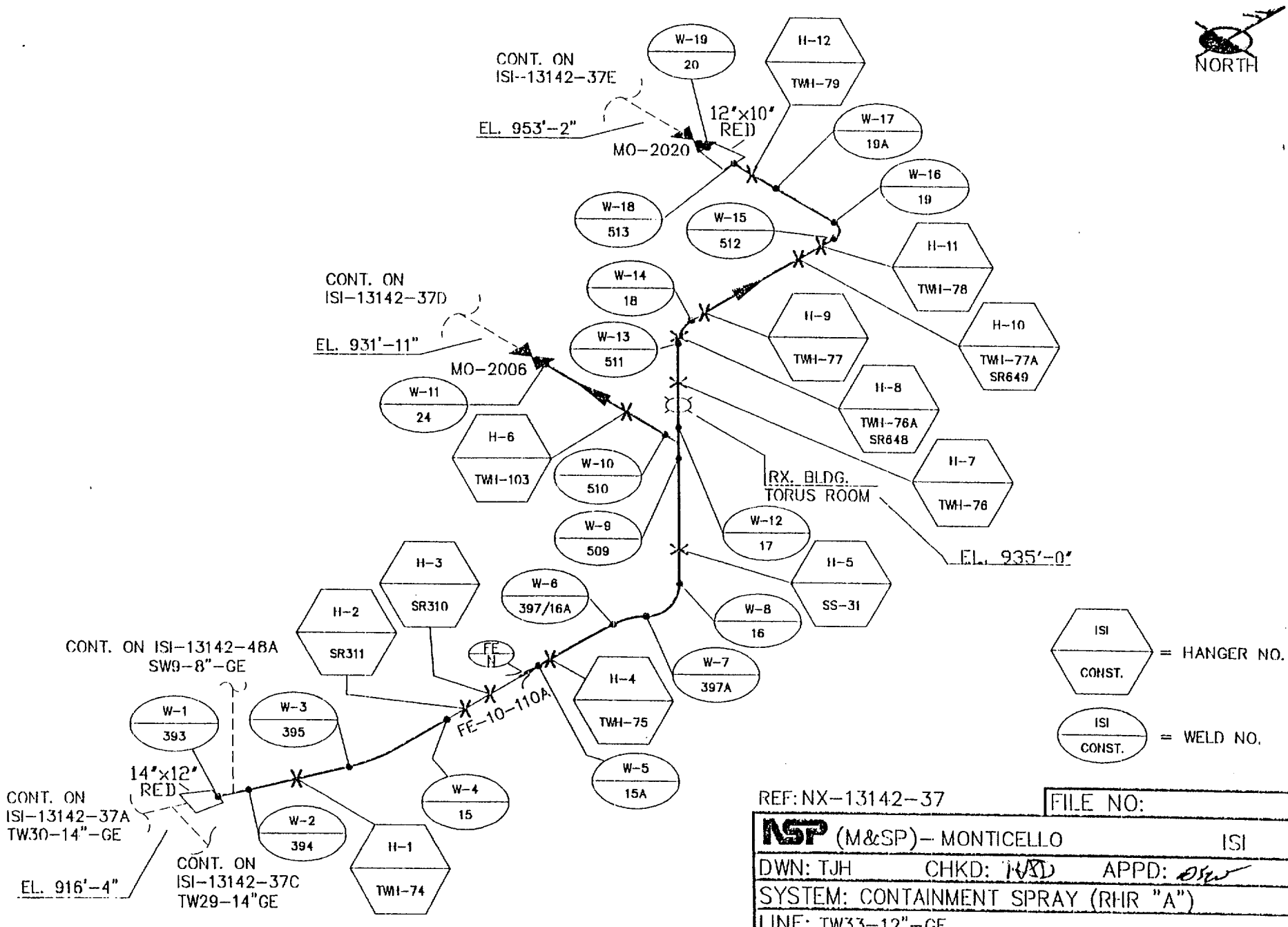

REF: NX-13142-37

FILE NO:

NSP (M&SP)- MONTICELLO ISI

DWN: TJH CHKD: RXD APPD:

SYSTEM: CONTAINMENT SPRAY (RHR "A")

LINE: TW33-12"-GE

DWG: ISI-13142-37B REV: 04

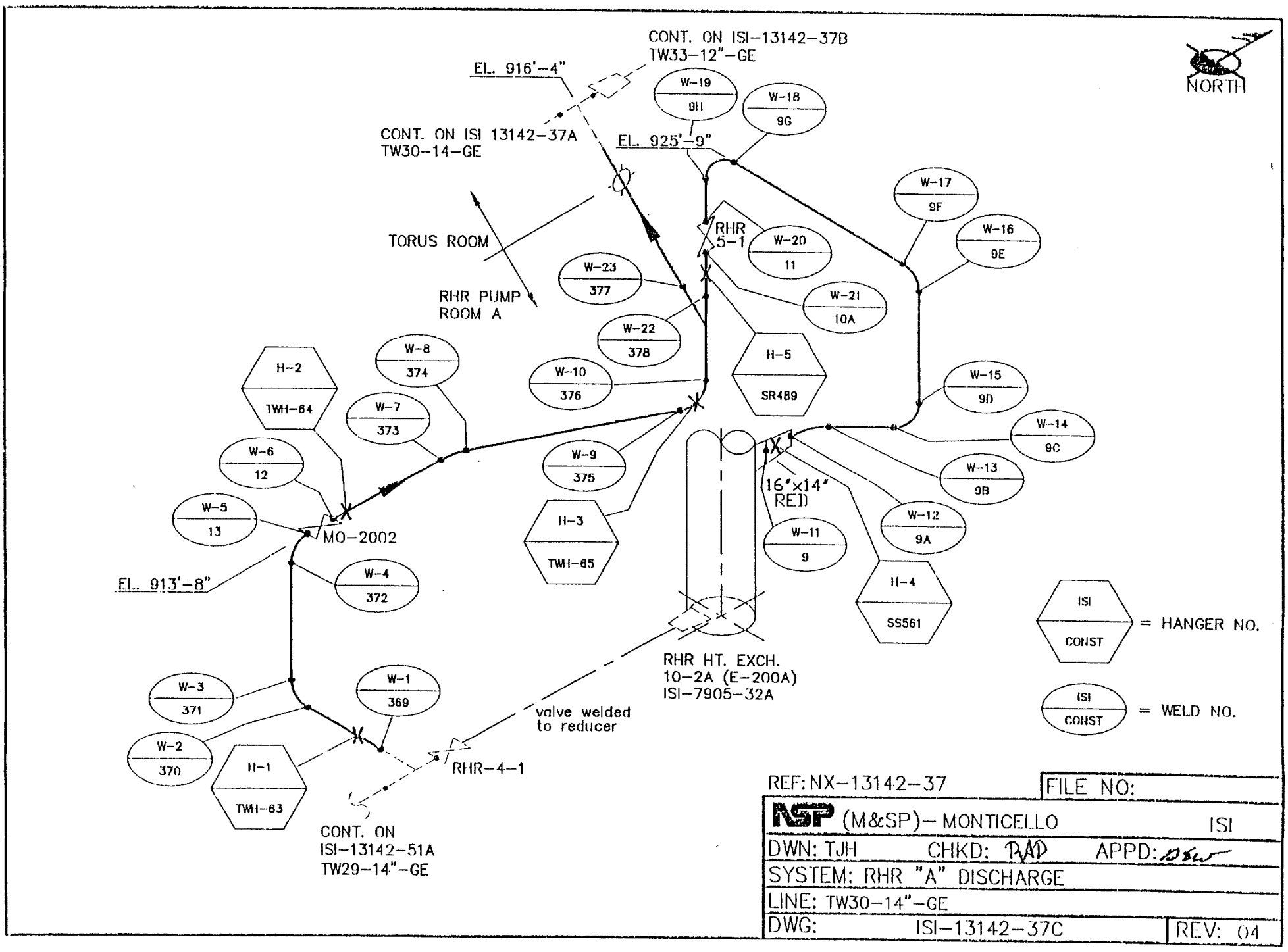

REF: NX-13142-37 | FILE NO:

NSP (M&SP)- MONTICELLO | ISI

DWN: TJH | CHKD: RAD | APPD:

SYSTEM: RHR "A" DISCHARGE

LINE: TW30-14"-GE

DWG: ISI-13142-37C | REV: 04

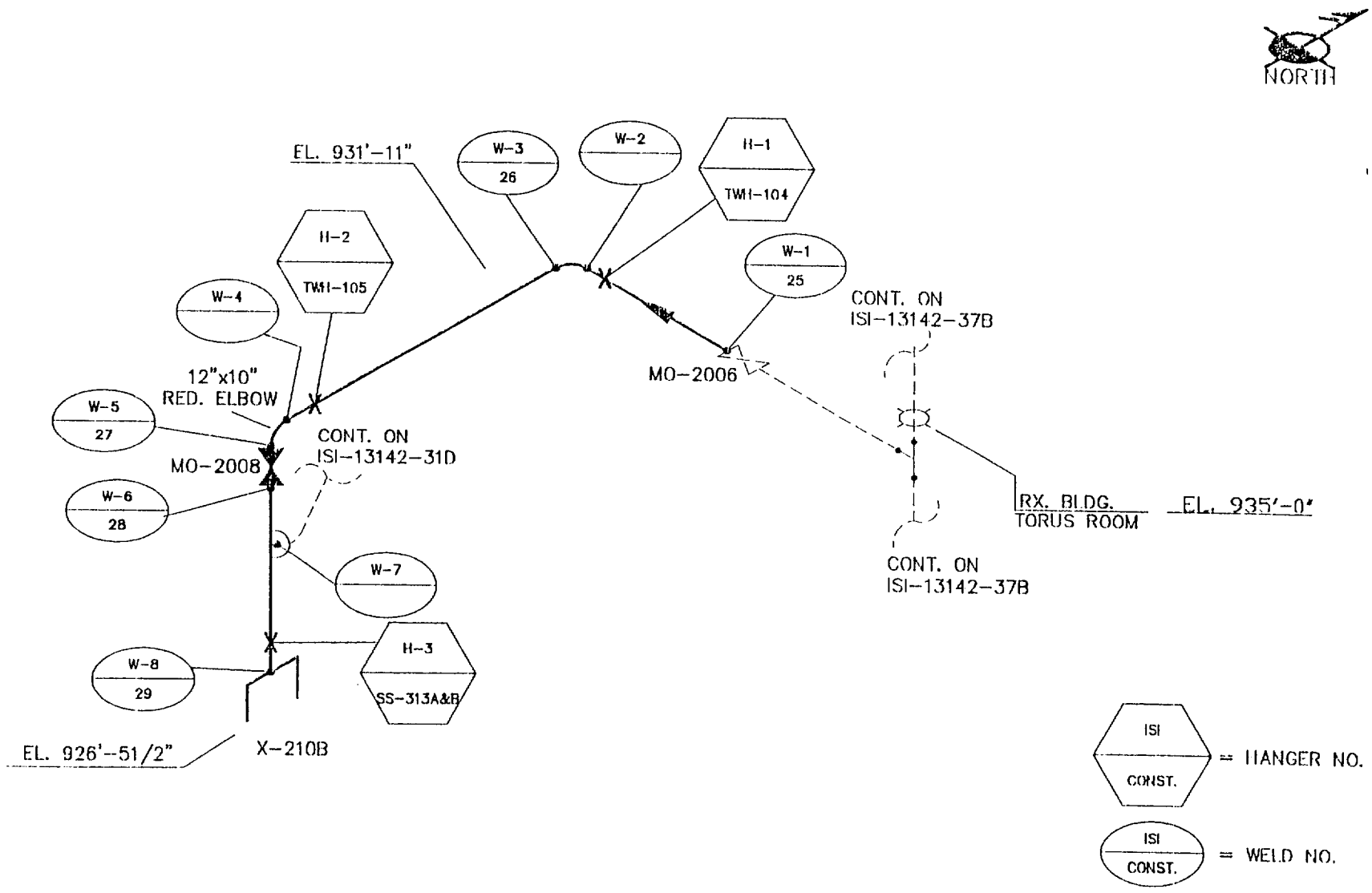

NOTE:

EXAMS REQUIRED ON HANGERS ONLY.

NO EXAMS REQUIRED AFTER W-5 PER TABLE IWC-2500-1, ITEM C5.50, <3/8" NOM WALL.

REF: NX-13142-37

FILE NO:

NSP (M&SP)– MONTICELLO ISI

DWN: TJH CHKD: RMD APPD:

SYSTEM: CONTAINMENT SPRAY (RHR "A")

LINE: TW34-12"-GE & TW34-10"-HE

DWG: ISI-13142-37D REV: 00

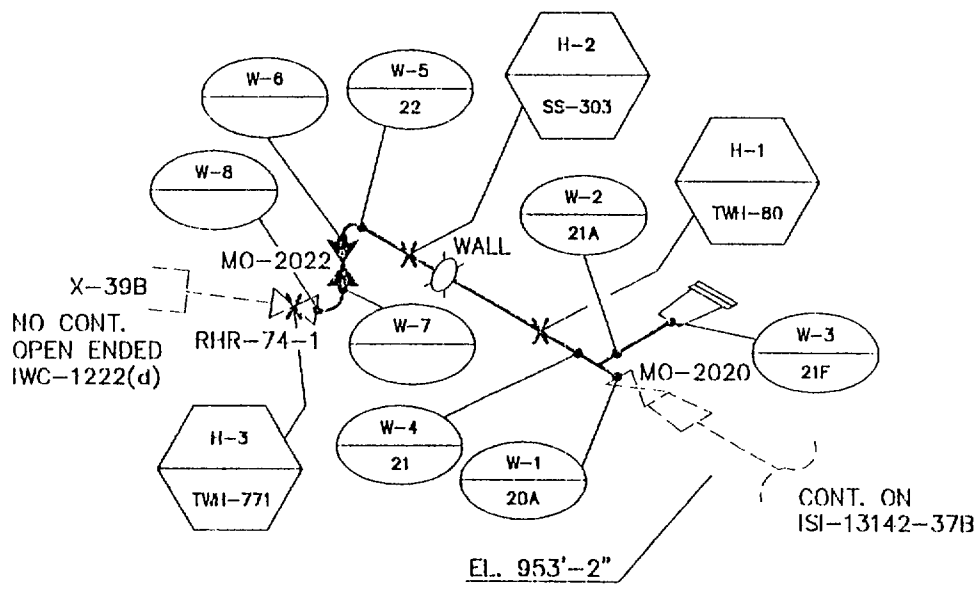

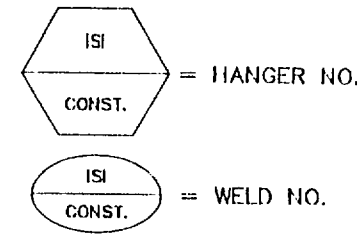

NOTE:

EXAMS REQUIRED ON HANGERS ONLY.

NO EXAMS REQUIRED ON WELDS PER TABLE IWC-2500-1, ITEM C5.50, <3/8" NOM WALL. LOCATED IN REACTOR BLDG EL. 935' ABOVE EAST CRD SCRAM & INSTRUMENT RACKS.

REF: NX-13142-37	FILE NO:
NSP (M&SP)– MONTICELLO	ISI
DWN: TJH CHKD: RJD APPD:	
SYSTEM: CONTAINMENT SPRAY (RHR "A")	
LINE: TW33-10"-GE	
DWG: ISI-13142-37E	REV: 00

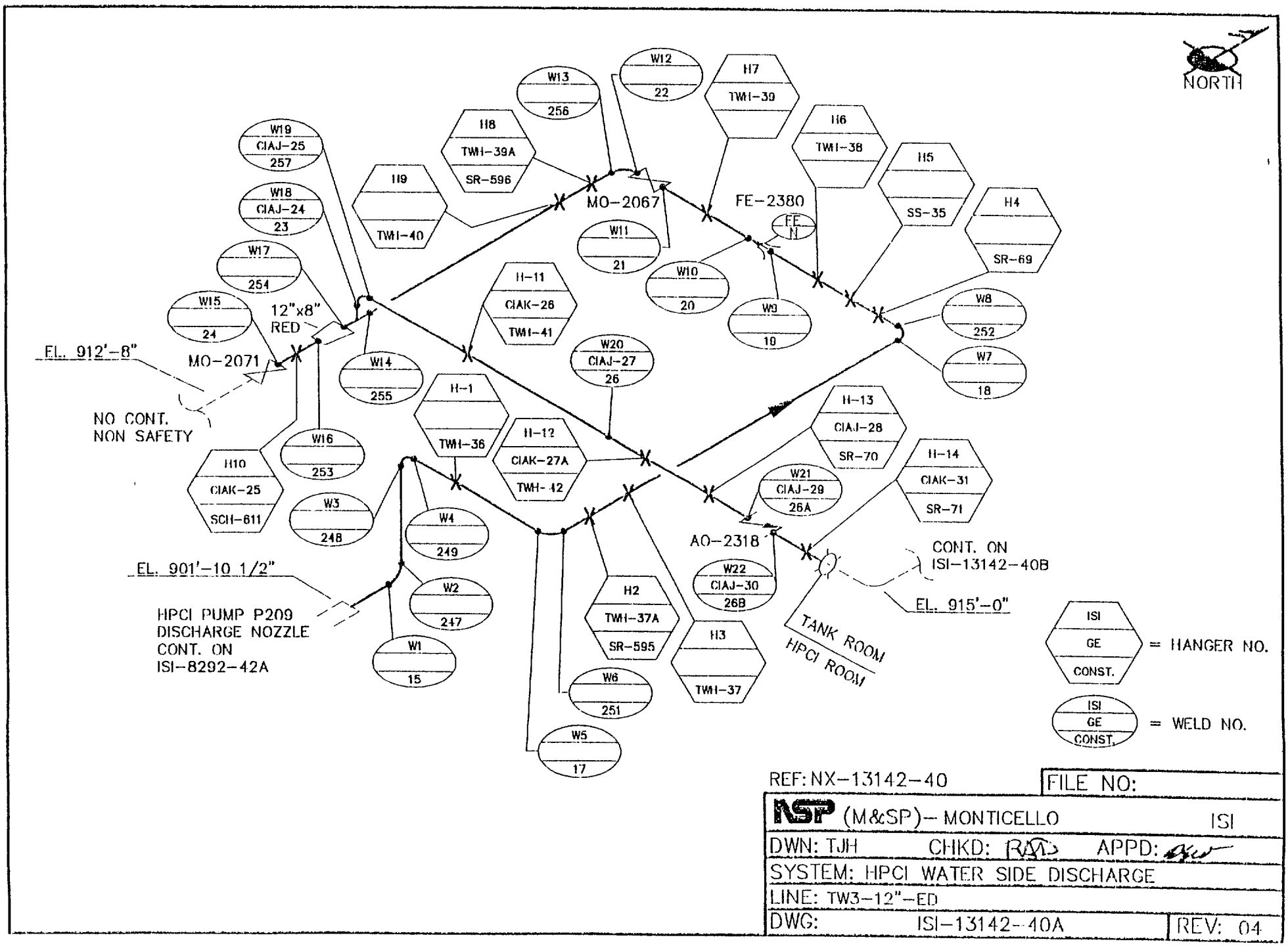

REF: NX-13142-40

FILE NO:

NSP (M&SP)– MONTICELLO ISI

DWN: TJH CHKD: RAS APPD:

SYSTEM: HPCI WATER SIDE DISCHARGE

LINE: TW3-12"-ED

DWG: ISI-13142-40A REV: 04

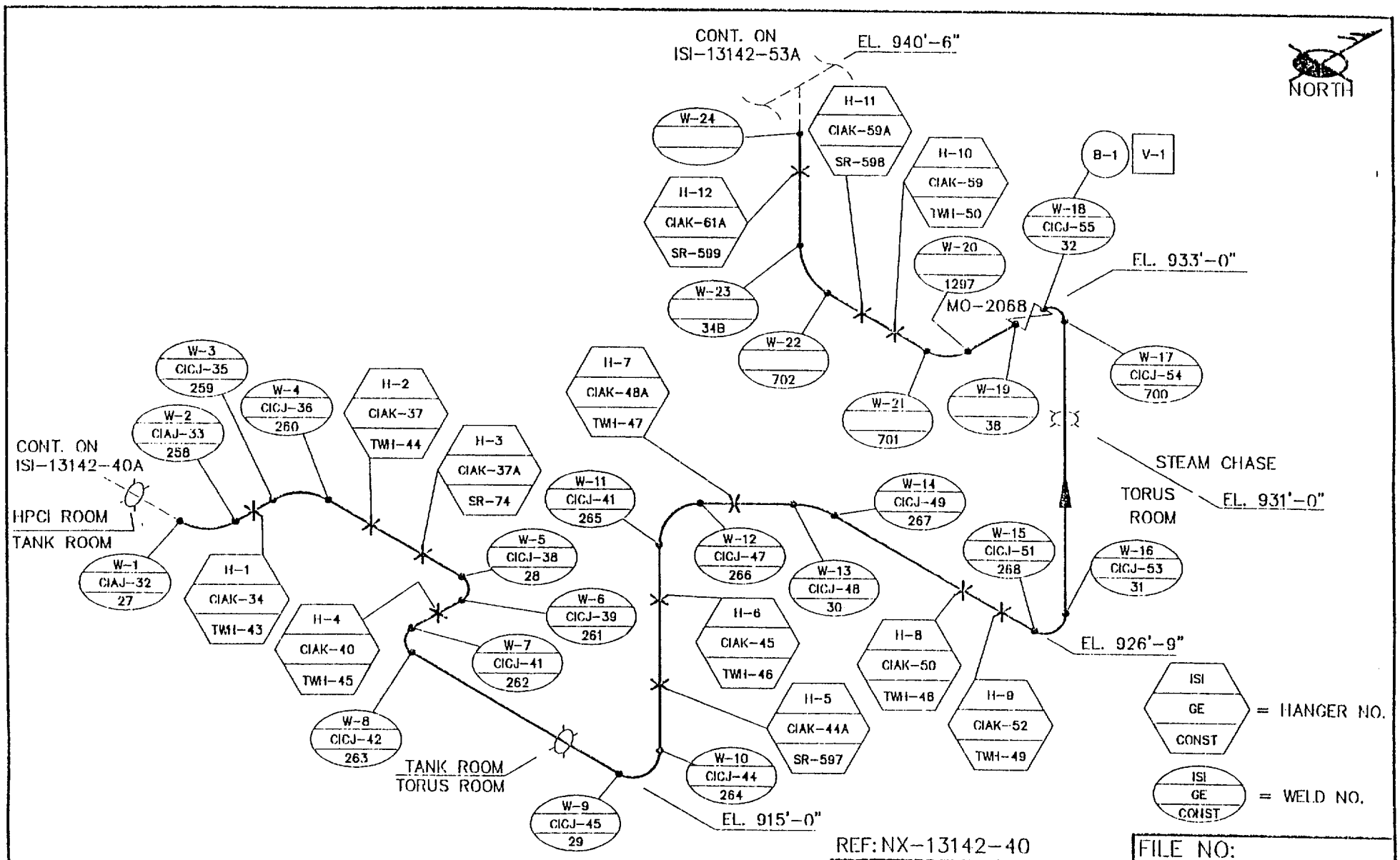
CONT. ON
ISI-13142-53A
EL. 940'-6"
NORTH
H-11
CIAK-59A
SR-598
W-24
H-10
CIAK-59
TWH-50
B-1
V-1
H-12
CIAK-61A
SR-599
W-18
CICJ-55
32
W-20
1297
EL. 933'-0"
W-23
34B
MO-2068
W-22
702
W-17
CICJ-54
700
W-3
CICJ-35
259
H-7
CIAK-48A
TWH-47
W-4
CICJ-36
260
H-2
CIAK-37
TWH-44
W-21
701
W-19
38
W-2
CIAJ-33
258
H-3
CIAK-37A
SR-74
CONT. ON
ISI-13142-40A
W-11
CICJ-41
265
W-14
CICJ-49
267
STEAM CHASE
TORUS
ROOM
EL. 931'-0"
HPCI ROOM
TANK ROOM
W-5
CICJ-38
28
W-12
CICJ-47
266
W-15
CICJ-51
268
W-16
CICJ-53
31
W-1
CIAJ-32
27
H-1
CIAK-34
TWH-43
W-13
CICJ-48
30
W-6
CICJ-39
261
H-4
CIAK-40
TWH-45
H-6
CIAK-45
TWH-46
H-8
CIAK-50
TWH-48
EL. 926'-9"
W-7
CICJ-41
262
H-5
CIAK-44A
SR-597
H-9
CIAK-52
TWH-49
ISI
GE
CONST
= HANGER NO.
W-8
CICJ-42
263
W-10
CICJ-44
264
TANK ROOM
TORUS ROOM
ISI
GE
CONST
= WELD NO.
W-9
CICJ-45
29
EL. 915'-0"
REF: NX-13142-40
FILE NO:
NSP (M&SP)-- MONTICELLO
ISI
DWN: TJH
CHKD: RAD
APPD:
SYSTEM: HPCI WATER SIDE DISCHARGE
LINE: TW3-12"-ED
DWG: ISI-13142-40B
REV: 04

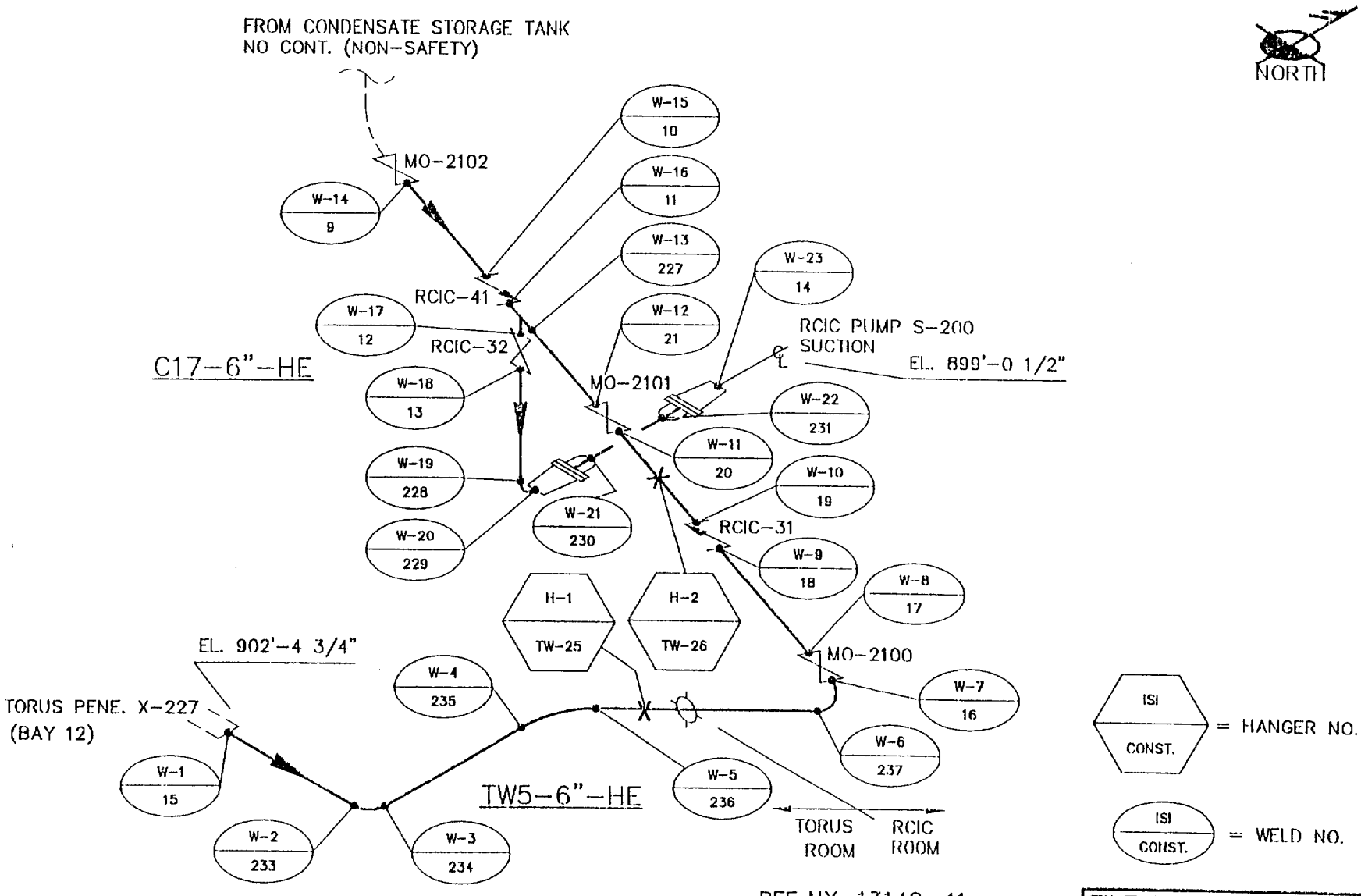

NOTE:

EXAMS REQUIRED FOR W-1 AND HANGERS.

NO EXAMS REQUIRED FOR W-2 THRU W-20 PER TABLE IWC-2500-1, ITEM C5.50, <3/8" NOM WALL.

REF: NX-13142-41

FILE NO:

NSP (M&SP)- MONTICELLO ISI

DWN: TJH CHKD: RAD APPD:

SYSTEM: RCIC WATER SUCTION

LINE: TW5-6"-HE, C17-6"-HE

DWG: ISI-13142-41A REV: 04

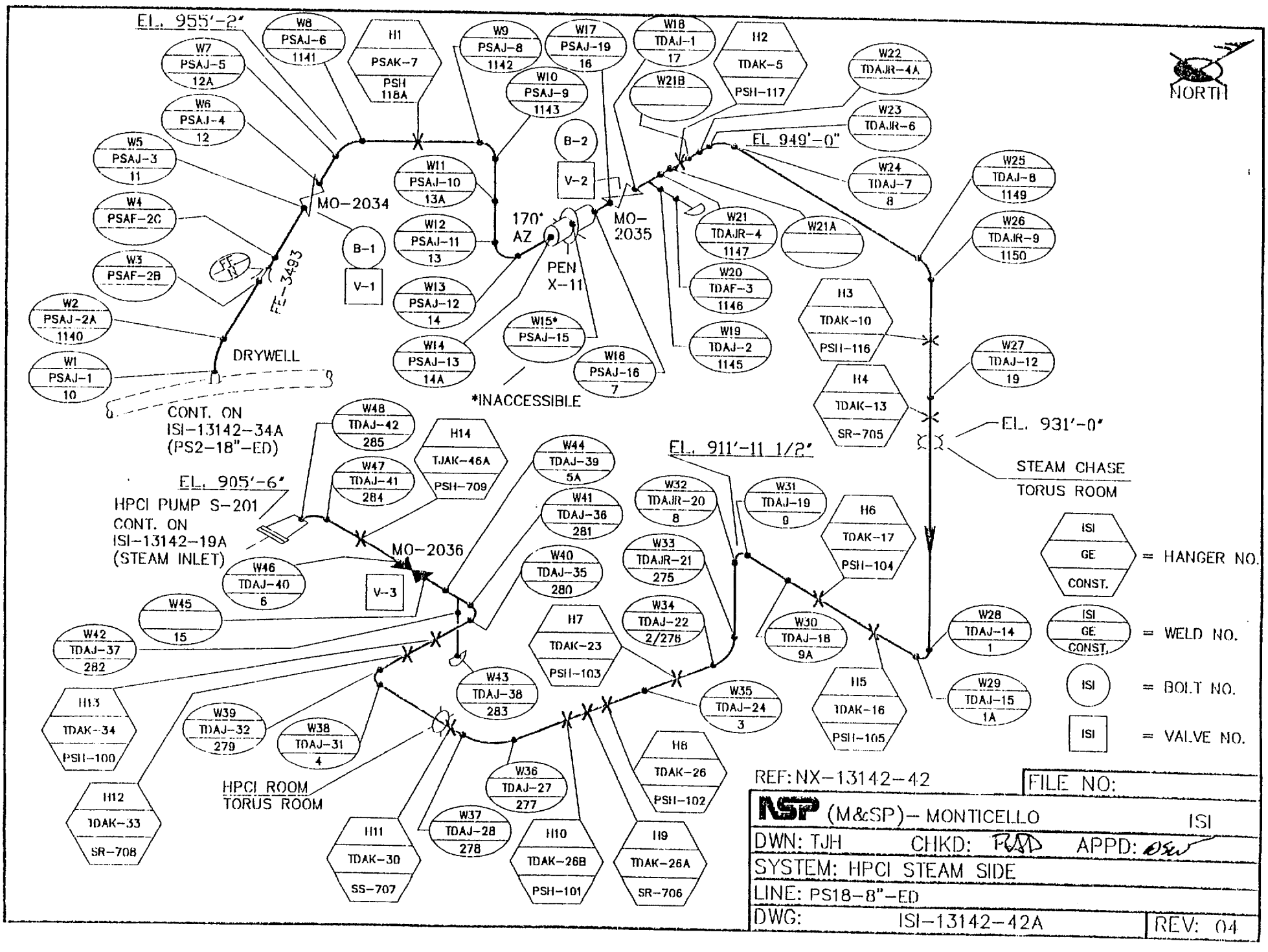
EL. 955'-2"
W8 PSAJ-6 1141
H1 PSAK-7 PSH 118A
W9 PSAJ-8 1142
W17 PSAJ-19 16
W18 TDAJ-1 17
H2 TDAK-5 PSH-117
W7 PSAJ-5 12A
W10 PSAJ-9 1143
W21B
W22 TDAJR-4A
W6 PSAJ-4 12
W23 TDAJR-6
NORTH
W5 PSAJ-3 11
B-2
V-2
EL. 949'-0"
W11 PSAJ-10 13A
W24 TDAJ-7 8
W25 TDAJ-8 1149
W4 PSAF-2C
MO-2034
170° AZ
MO-2035
W21 TDAJR-4 1147
W21A
W26 TDAJR-9 1150
W12 PSAJ-11 13
B-1
W3 PSAF-2B
FF-N
FT-3493
PEN X-11
W20 TDAF-3 1146
H3 TDAK-10 PSH-116
W13 PSAJ-12 14
V-1
W2 PSAJ-2A 1140
W15* PSAJ-15
W19 TDAJ-2 1145
W14 PSAJ-13 14A
W16 PSAJ-16 7
W27 TDAJ-12 19
W1 PSAJ-1 10
DRYWELL
*INACCESSIBLE
H4 TDAK-13 SR-705
CONT. ON ISI-13142-34A (PS2-18"-ED)
W48 TDAJ-42 285
H14 TJAK-46A PSH-709
EL. 931'-0"
W44 TDAJ-39 5A
EL. 911'-11 1/2"
STEAM CHASE
TORUS ROOM
W47 TDAJ-41 284
EL. 905'-6"
W41 TDAJ-36 281
W32 TDAJR-20 8
W31 TDAJ-19 9
H6 TDAK-17 PSH-104
HPCI PUMP S-201
CONT. ON ISI-13142-19A (STEAM INLET)
MO-2036
W40 TDAJ-35 280
W33 TDAJR-21 275
ISI GE CONST. = HANGER NO.
W46 TDAJ-40 6
V-3
W45 15
W34 TDAJ-22 2/276
W30 TDAJ-18 9A
W28 TDAJ-14 1
ISI GE CONST. = WELD NO.
W42 TDAJ-37 282
H7 TDAK-23 PSH-103
W43 TDAJ-38 283
W35 TDAJ-24 3
H5 TDAK-16 PSH-105
W29 TDAJ-15 1A
ISI = BOLT NO.
H13 TDAK-34 PSH-100
W39 TDAJ-32 279
W38 TDAJ-31 4
H8 TDAK-26 PSH-102
ISI = VALVE NO.
W36 TDAJ-27 277
H12 TDAK-33 SR-708
HPCI ROOM
TORUS ROOM
W37 TDAJ-28 278
H11 TDAK-30 SS-707
H10 TDAK-26B PSH-101
H9 TDAK-26A SR-706
REF: NX-13142-42
FILE NO:
NSP (M&SP)-- MONTICELLO
ISI
DWN: TJH
CHKD: PAD
APPD: DSW
SYSTEM: HPCI STEAM SIDE
LINE: PS18-8"-ED
DWG: ISI-13142-42A
REV: 04

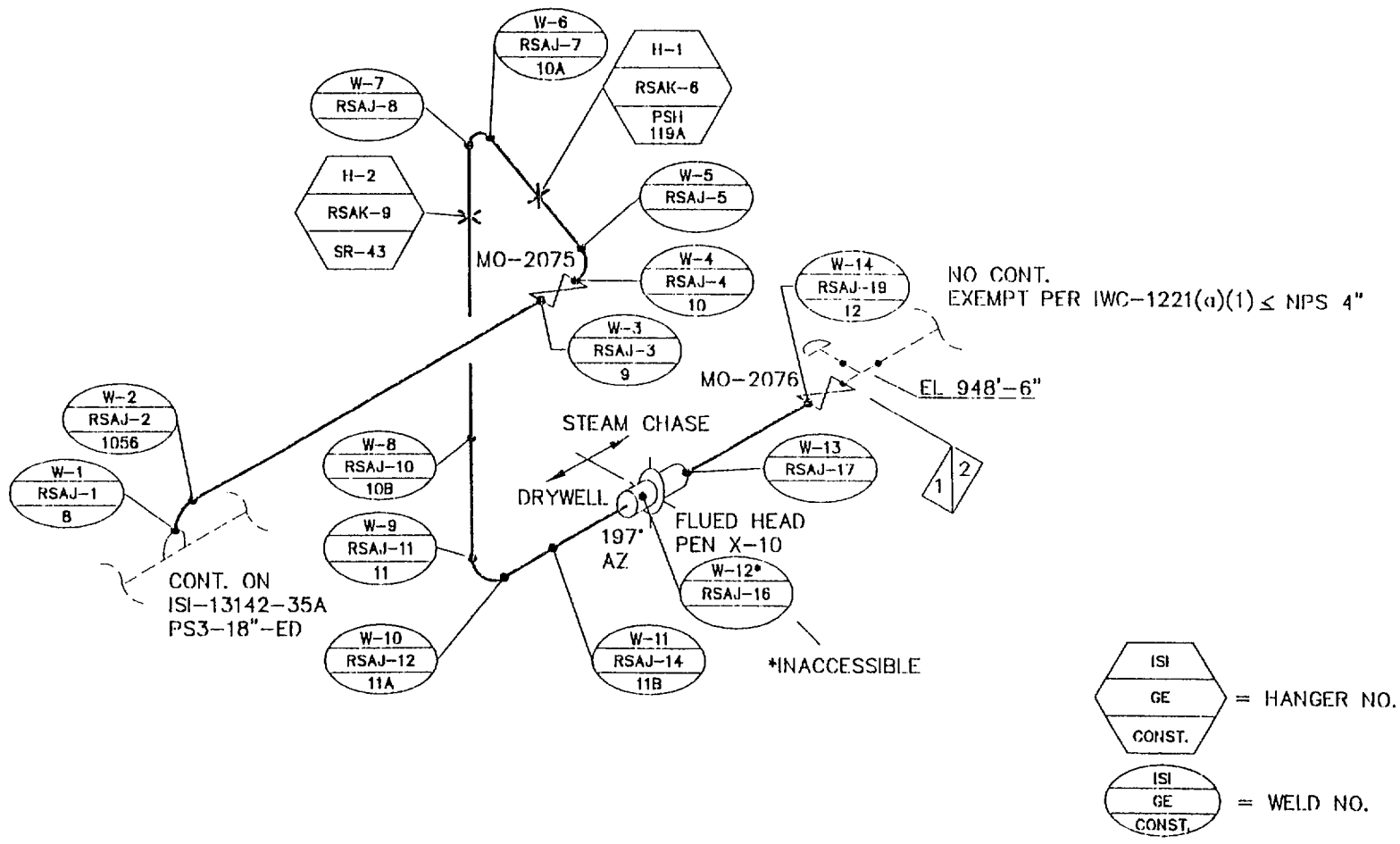

REF: NX-13142-43

FILE NO:

NSP (M&SP)– MONTICELLO ISI

DWN: TJH CHKD: RBD APPD: DRV

SYSTEM: RCIC STEAM SIDE

LINE: PS17-3"-ED

DWG: ISI-13142-43A REV: 04

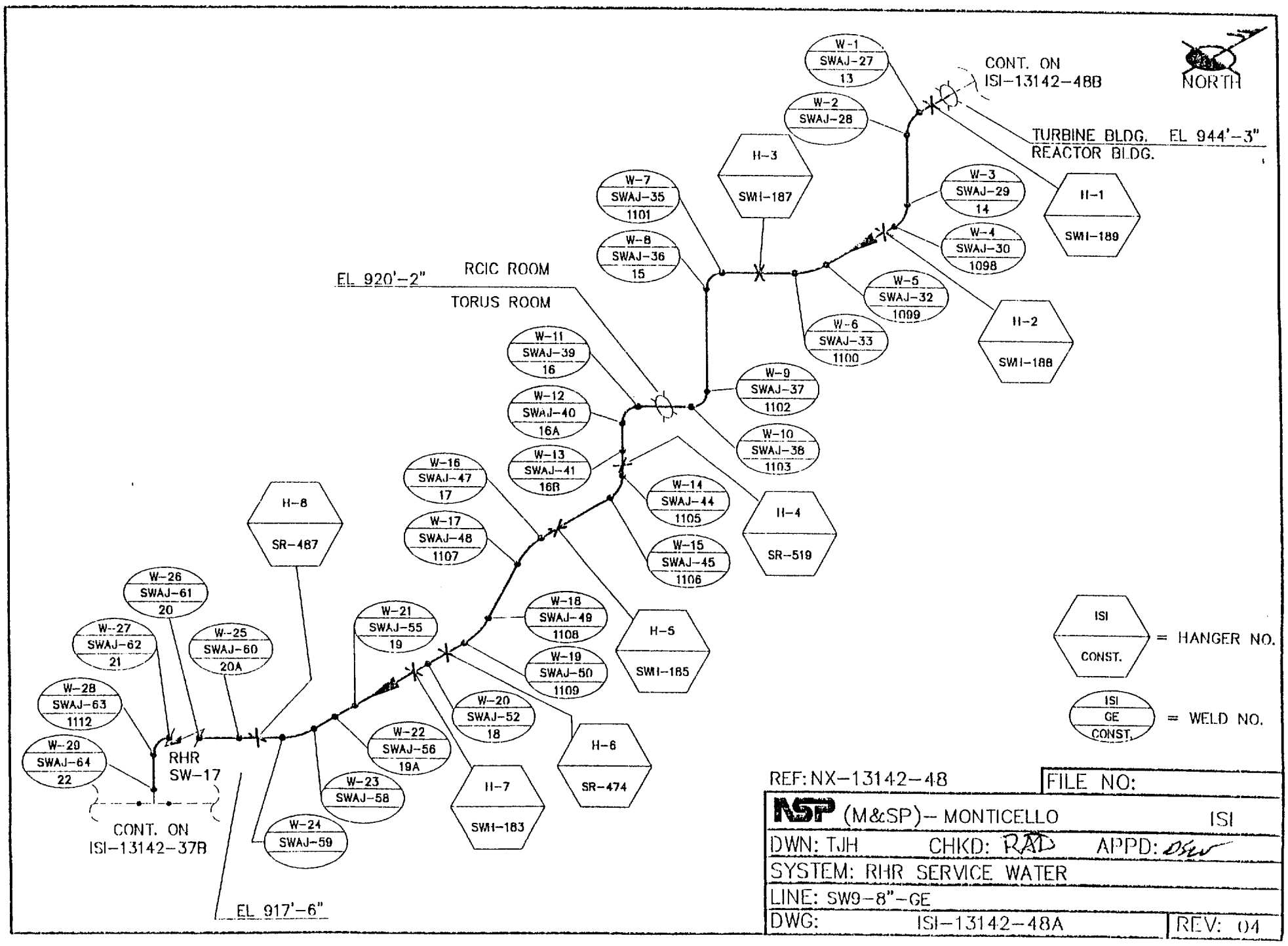

REF: NX-13142-48 | FILE NO:

NSP (M&SP)- MONTICELLO ISI

DWN: TJH CHKD: RAD APPD: DSW

SYSTEM: RHR SERVICE WATER

LINE: SW9-8"-GE

DWG: ISI-13142-48A | REV: 04

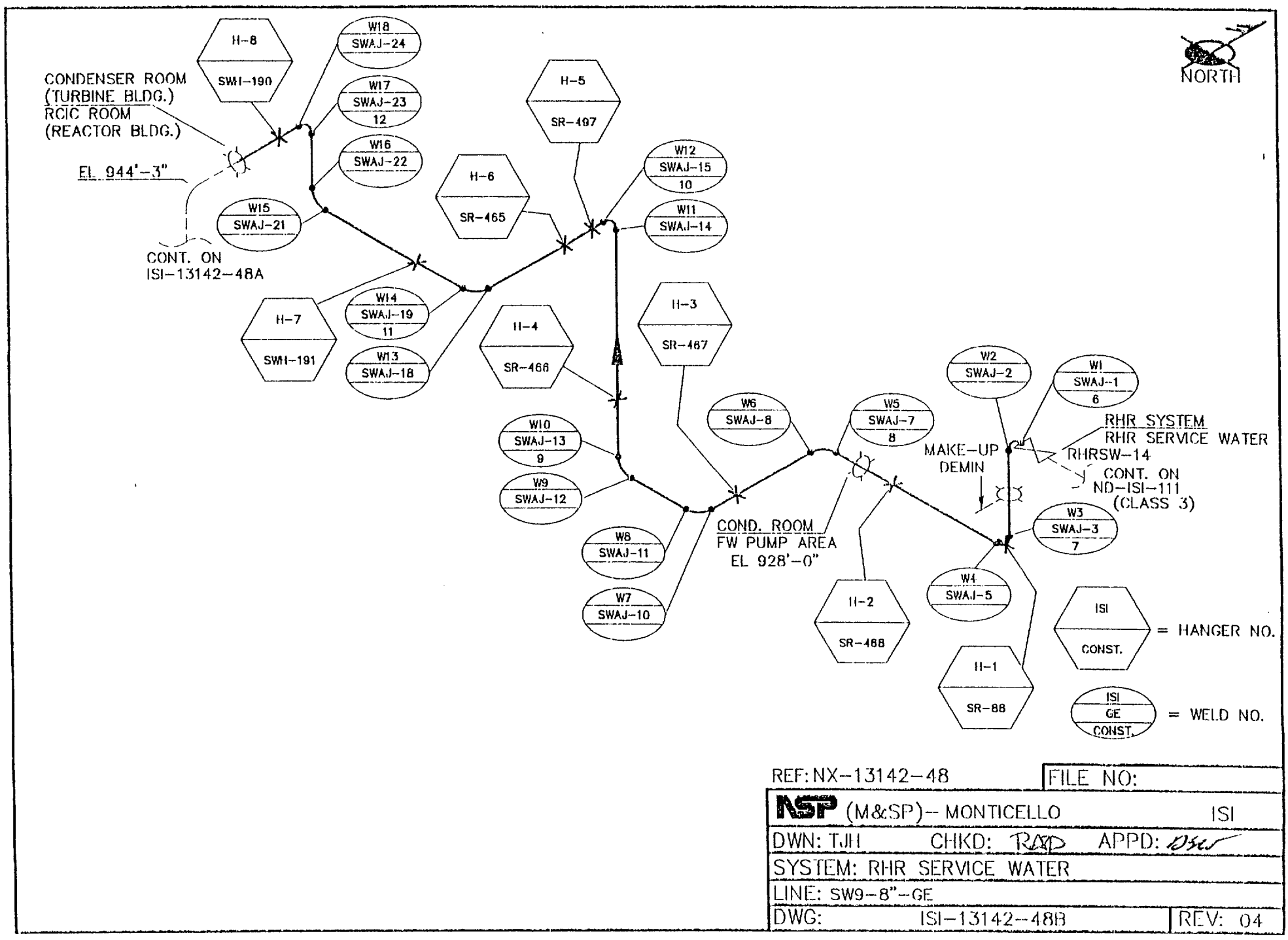

REF: NX-13142-48 | FILE NO:

NSP (M&SP)-- MONTICELLO ISI

DWN: TJH CHKD: RAD APPD: DSW

SYSTEM: RHR SERVICE WATER

LINE: SW9-8"-GE

DWG: ISI-13142-48B REV: 04

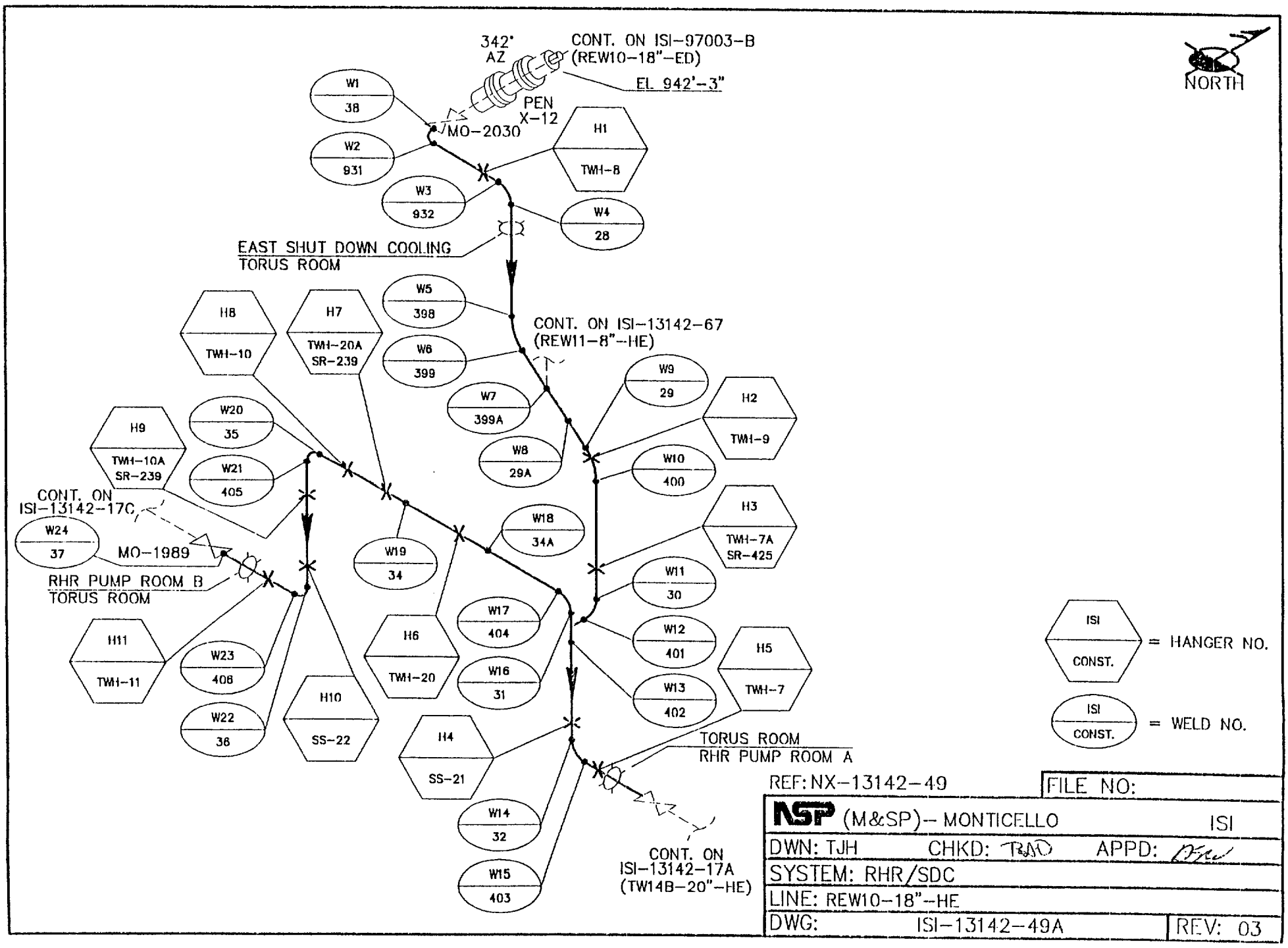

REF: NX-13142-49

FILE NO:	
NSP (M&SP)-- MONTICELLO	ISI
DWN: TJH CHKD: TAD	APPD: DEW
SYSTEM: RHR/SDC	
LINE: REW10-18"-HE	
DWG: ISI-13142-49A	REV: 03

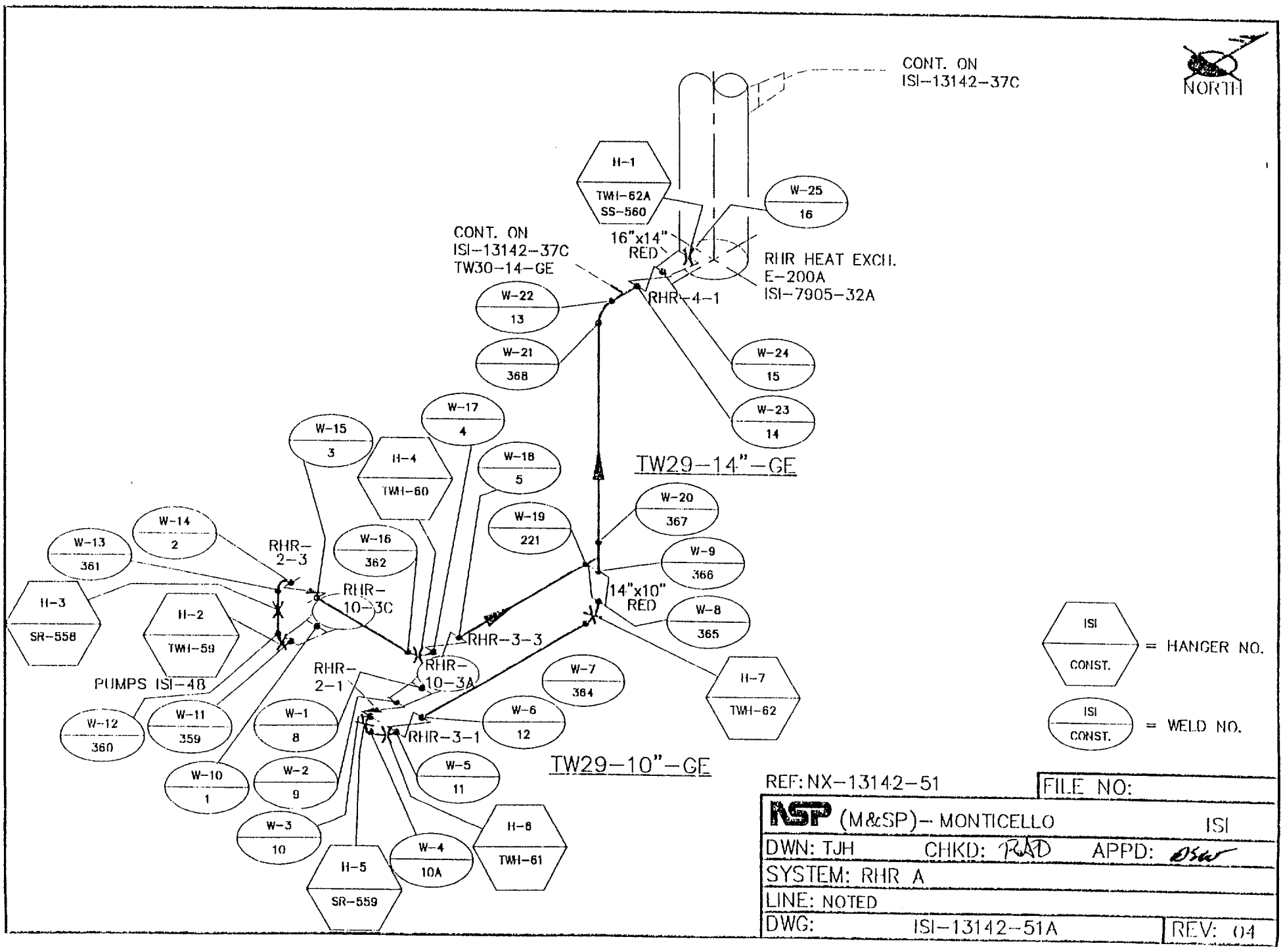

REF: NX-13142-51

FILE NO:	
NSP (M&SP)-- MONTICELLO	ISI
DWN: TJH CHKD: RAD APPD: DSW	
SYSTEM: RHR A	
LINE: NOTED	
DWG: ISI-13142-51A	REV: 04

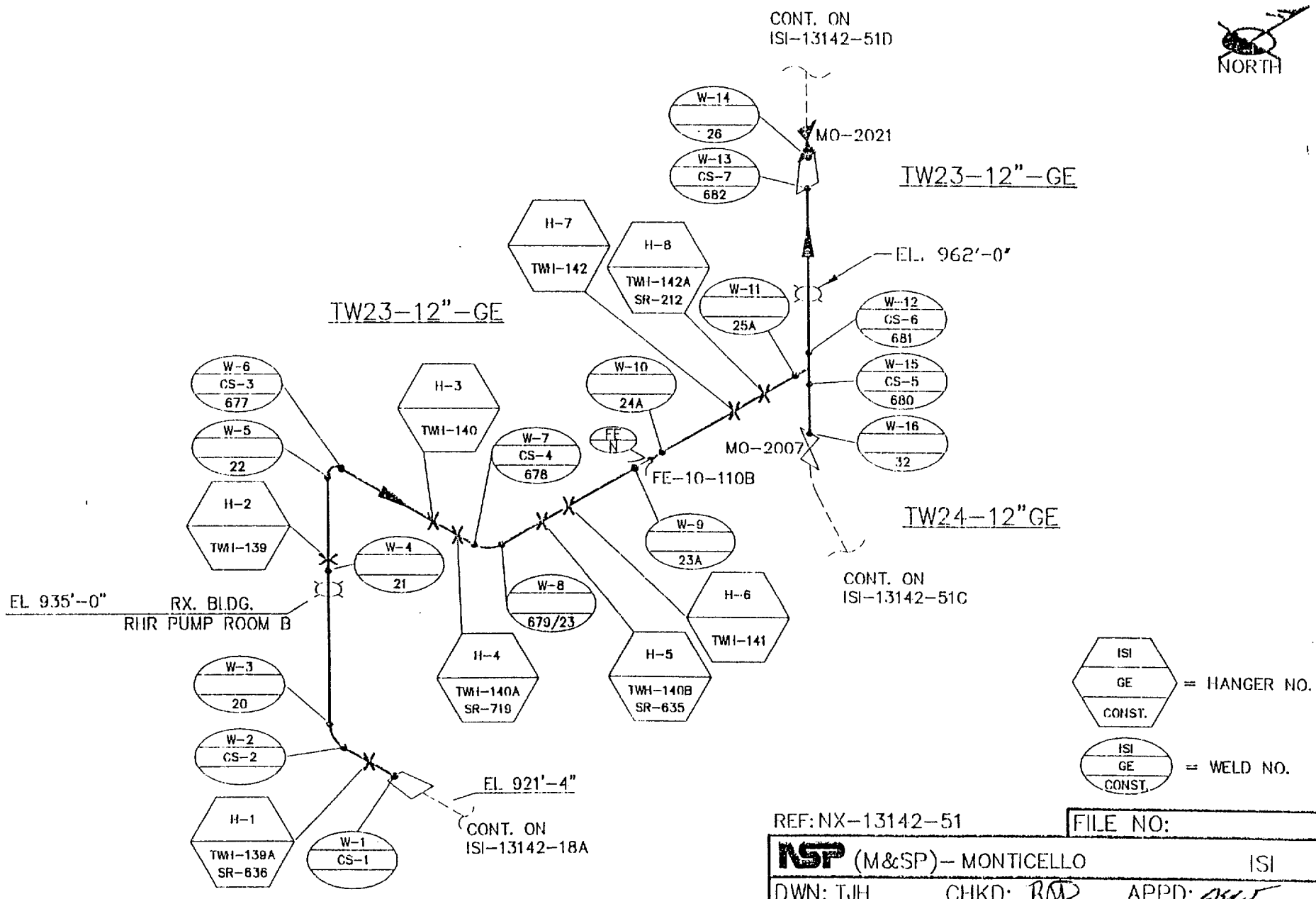

REF: NX-13142-51 | FILE NO:

NSP (M&SP)-- MONTICELLO ISI

DWN: TJH CHKD: RAD APPD: [illegible]

SYSTEM: RHR B

LINE: NOTED

DWG: ISI-13142-51B REV: 04

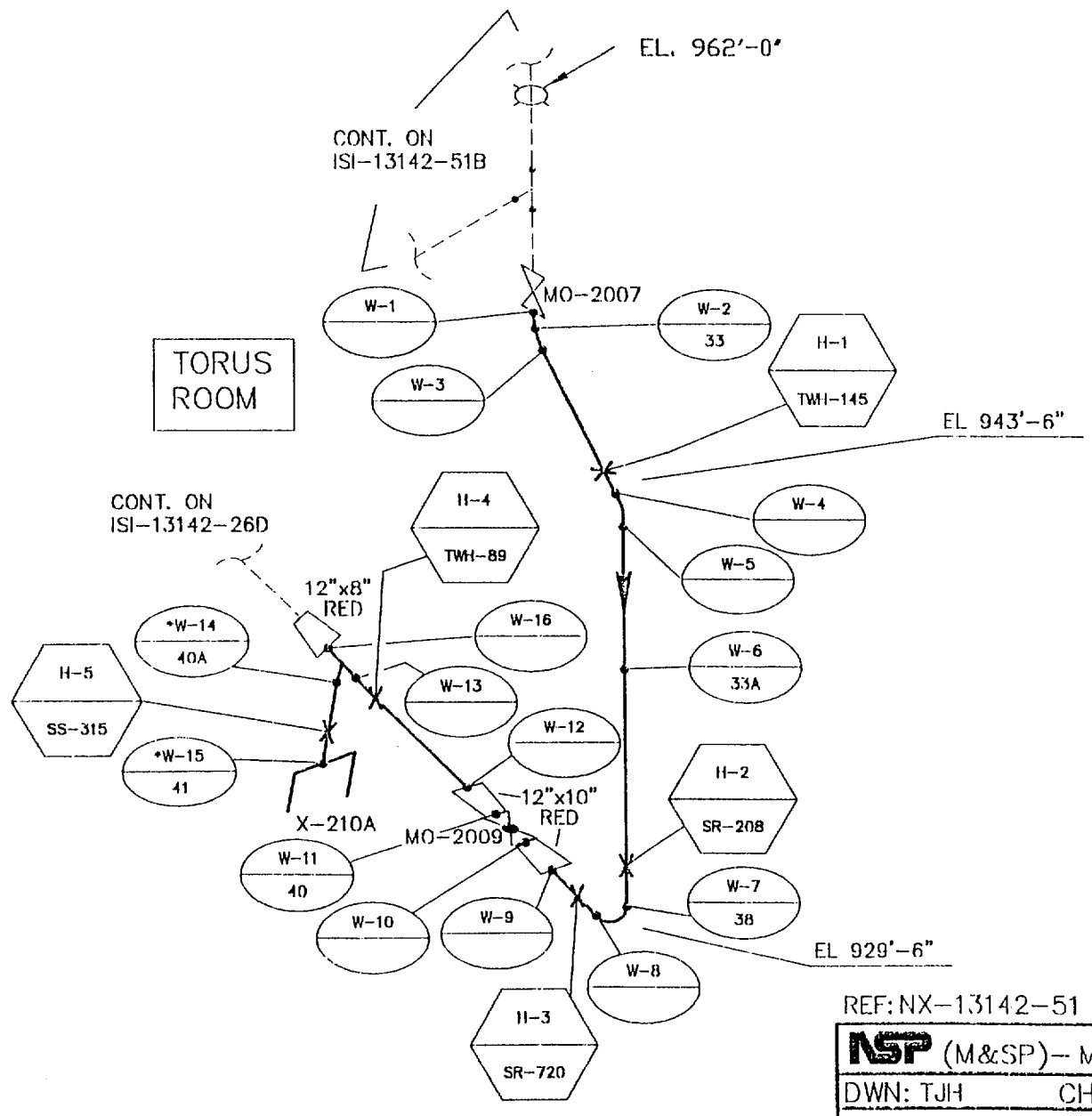

ISI / CONST. = HANGER NO.

ISI / CONST. = WELD NO.

NOTE:
* NO EXAMS REQUIRED ON W-14 & W-15
PER TABLE IWC-2500-1, ITEM C5.50, <3/8" NOM WALL.

REF: NX-13142-51

FILE NO:

NSP (M&SP)- MONTICELLO ISI

DWN: TJH CHKD: RAD APPD:

SYSTEM: RHR B

LINE: TW24-12"-GE

DWG: ISI-13142-51C REV: 00

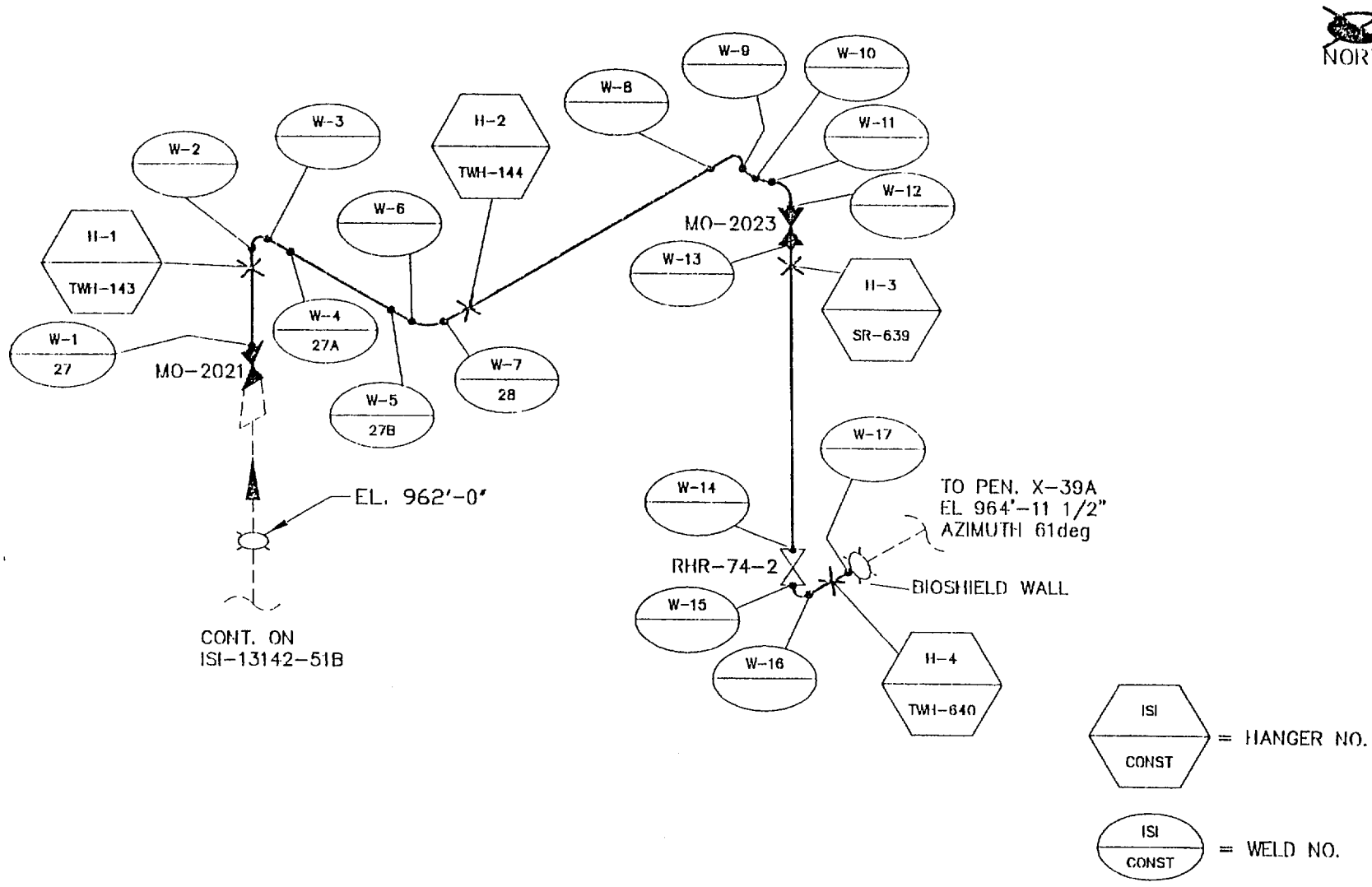

NOTE:

NO EXAMS REQUIRED ON WELDS PER TABLE IWC-2500-1, ITEM C5.50, <3/8" NOM WALL.

REF: NX-13142-51

FILE NO:

NSP (M&SP)-- MONTICELLO ISI

DWN: TJH CHKD: RAD APPD:

SYSTEM: RHR B

LINE: TW23-10"-GE

DWG: ISI-13142-51D REV: 00

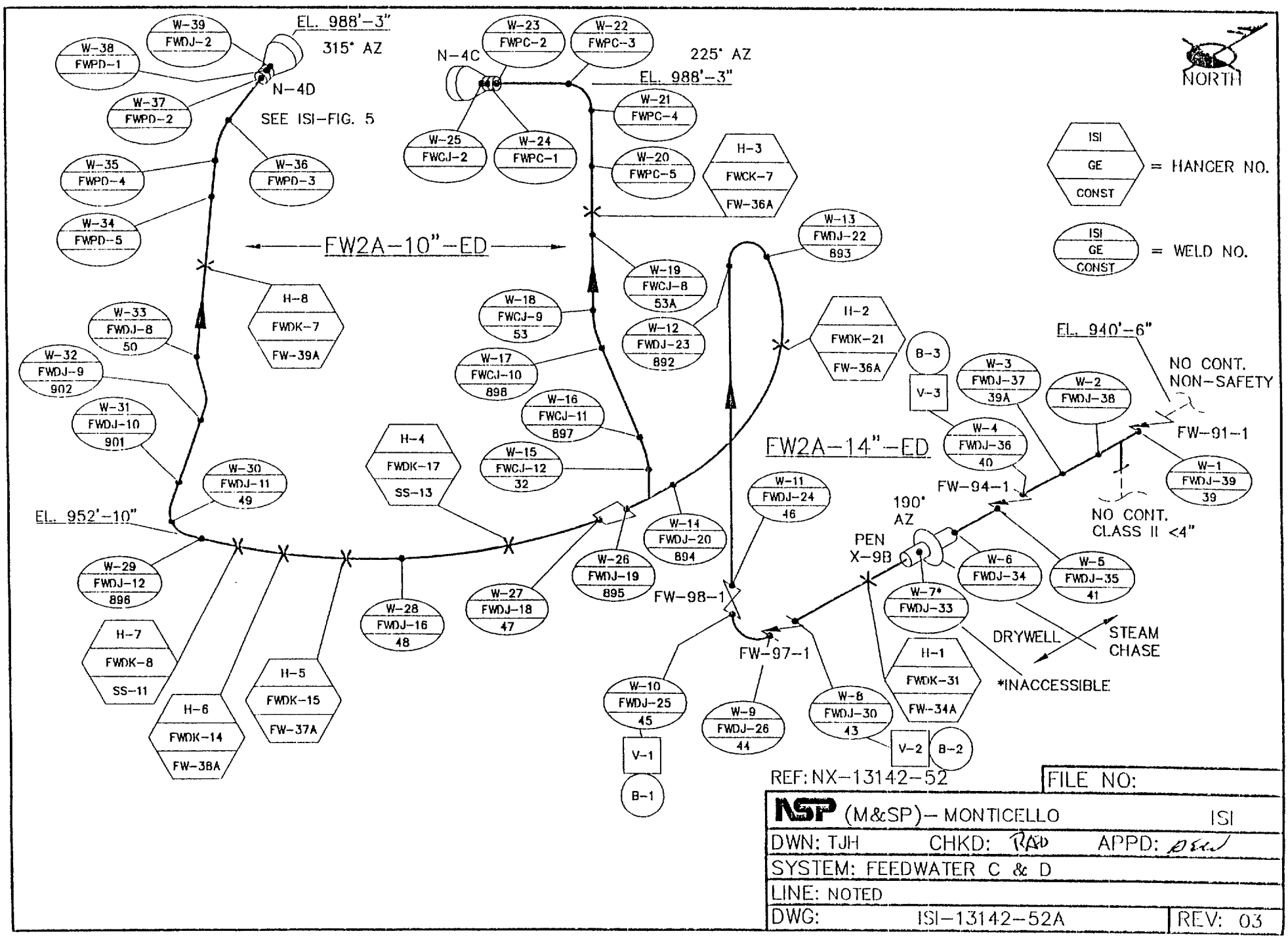

REF: NX-13142-52

FILE NO:

NSP (M&SP)- MONTICELLO ISI

DWN: TJH CHKD: RAD APPD: DEW

SYSTEM: FEEDWATER C & D

LINE: NOTED

DWG: ISI-13142-52A REV: 03

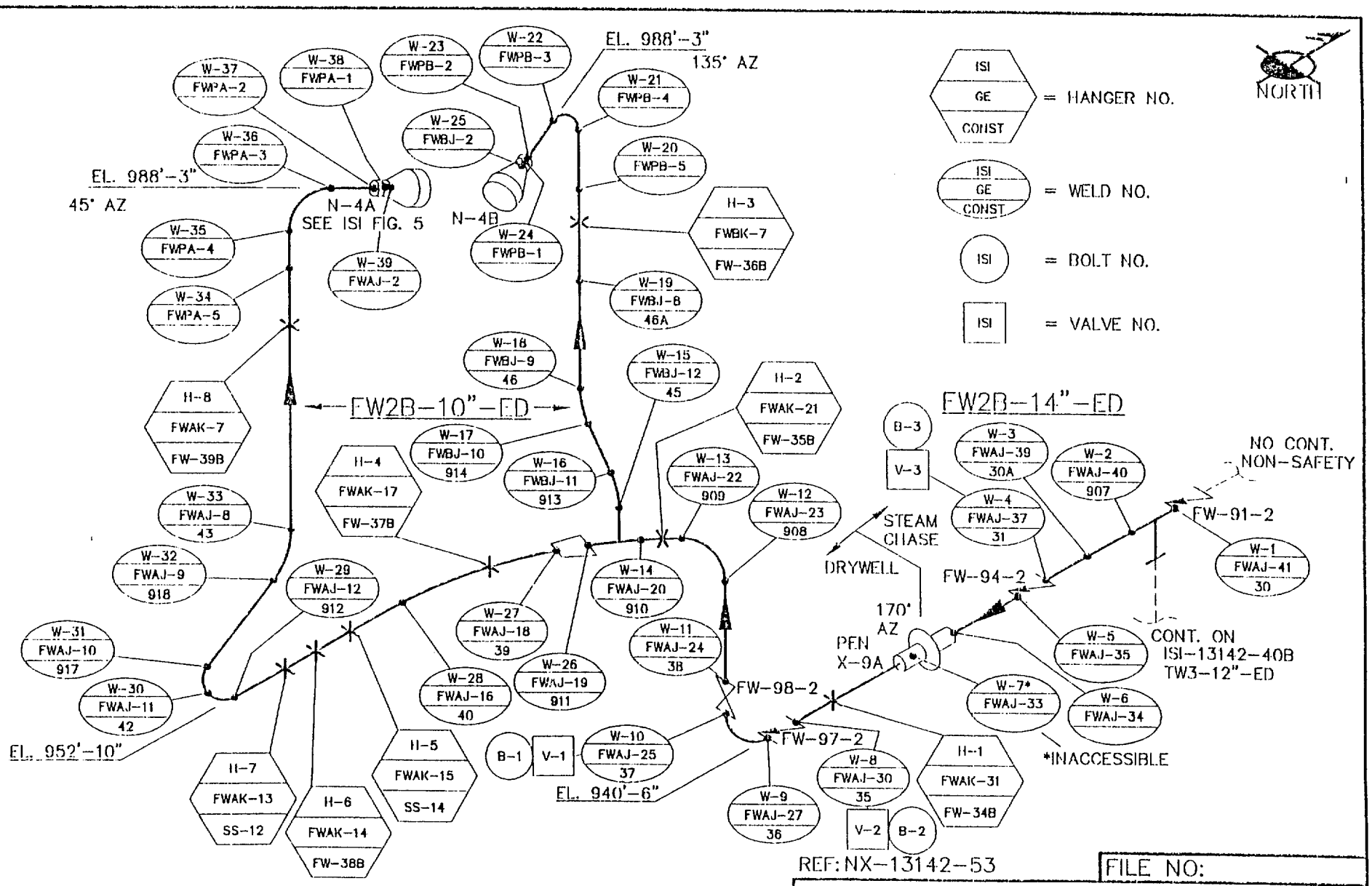

REF: NX-13142-53

FILE NO:

NSP (M&SP)- MONTICELLO ISI

DWN: TJH CHKD: RWD APPD: DSW

SYSTEM: FEEDWATER A & B

LINE: FW2B-10"-ED & FW2B-14"-ED

DWG: ISI-13142-53A REV: 04

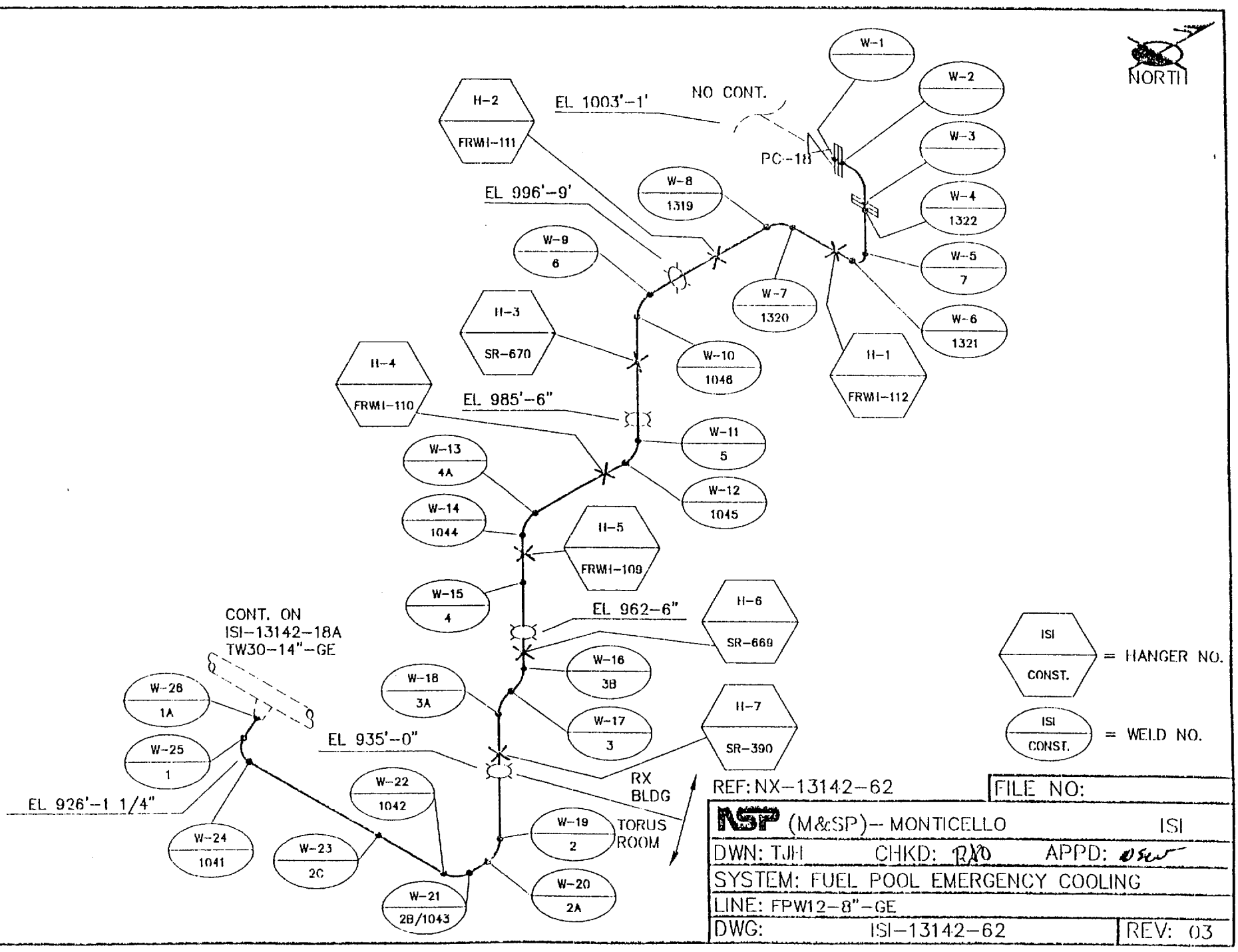
NORTH
W-1
W-2
W-3
W-4
1322
W-5
7
W-6
1321
W-7
1320
W-8
1319
W-9
6
W-10
1046
W-11
5
W-12
1045
W-13
4A
W-14
1044
W-15
4
W-16
3B
W-17
3
W-18
3A
W-19
2
W-20
2A
W-21
2B/1043
W-22
1042
W-23
2C
W-24
1041
W-25
1
W-26
1A
H-1
FRWH-112
H-2
FRWH-111
H-3
SR-670
H-4
FRWH-110
H-5
FRWH-109
H-6
SR-669
H-7
SR-390
EL 1003'-1'
NO CONT.
PC-18
EL 996'-9'
EL 985'-6"
EL 962-6"
EL 935'-0"
EL 926'-1 1/4"
CONT. ON
ISI-13142-18A
TW30-14"-GE
RX
BLDG
TORUS
ROOM
ISI
CONST.
= HANGER NO.
ISI
CONST.
= WELD NO.
REF: NX-13142-62
FILE NO:
NSP (M&SP)-- MONTICELLO
ISI
DWN: TJH
CHKD: RAO
APPD:
SYSTEM: FUEL POOL EMERGENCY COOLING
LINE: FPW12-8"-GE
DWG: ISI-13142-62
REV: 03

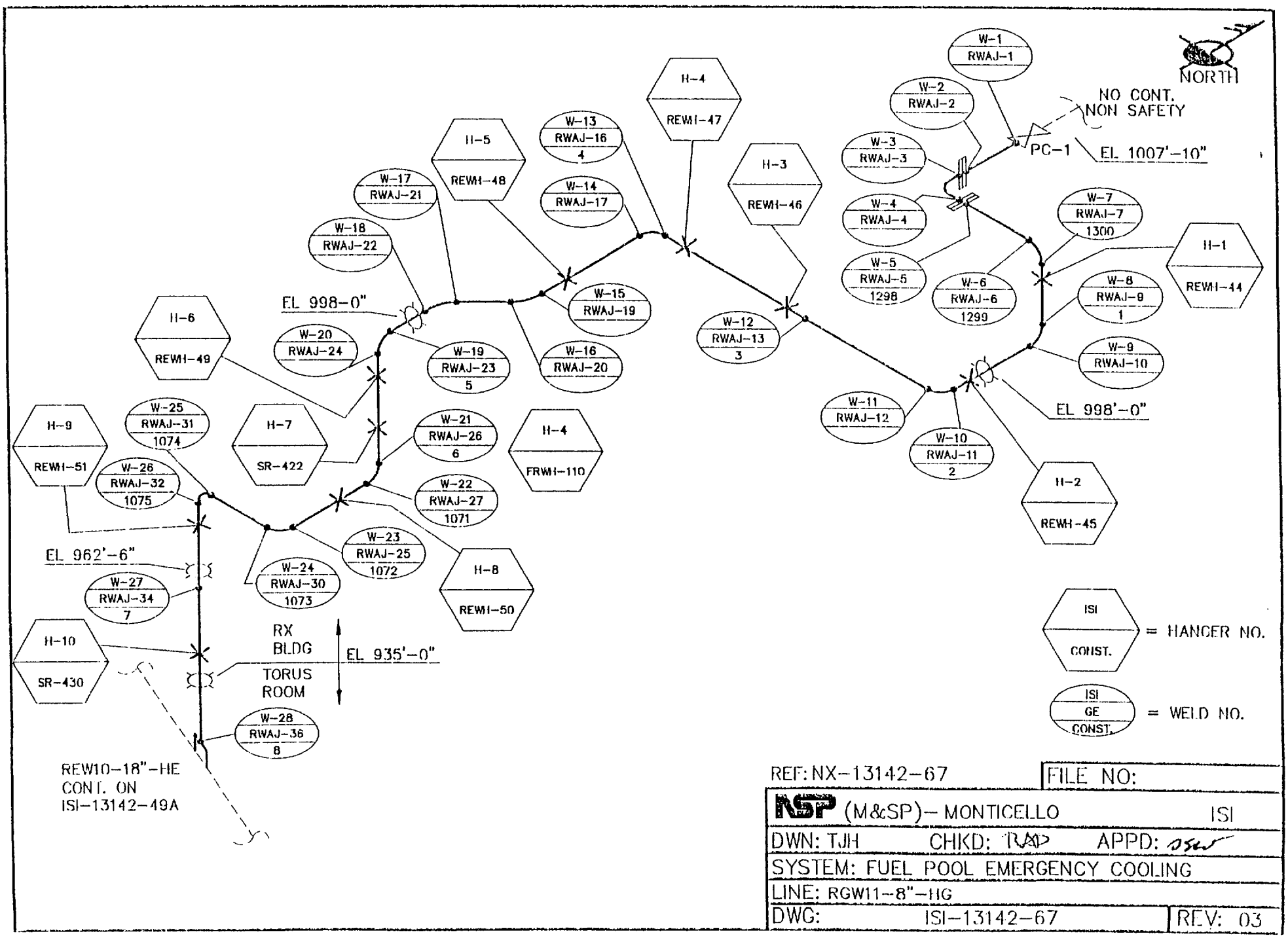

REF: NX-13142-67

FILE NO:

NSP (M&SP)– MONTICELLO ISI

DWN: TJH CHKD: TVAD APPD: DSEW

SYSTEM: FUEL POOL EMERGENCY COOLING

LINE: RGW11-8"-HG

DWG: ISI-13142-67 REV: 03

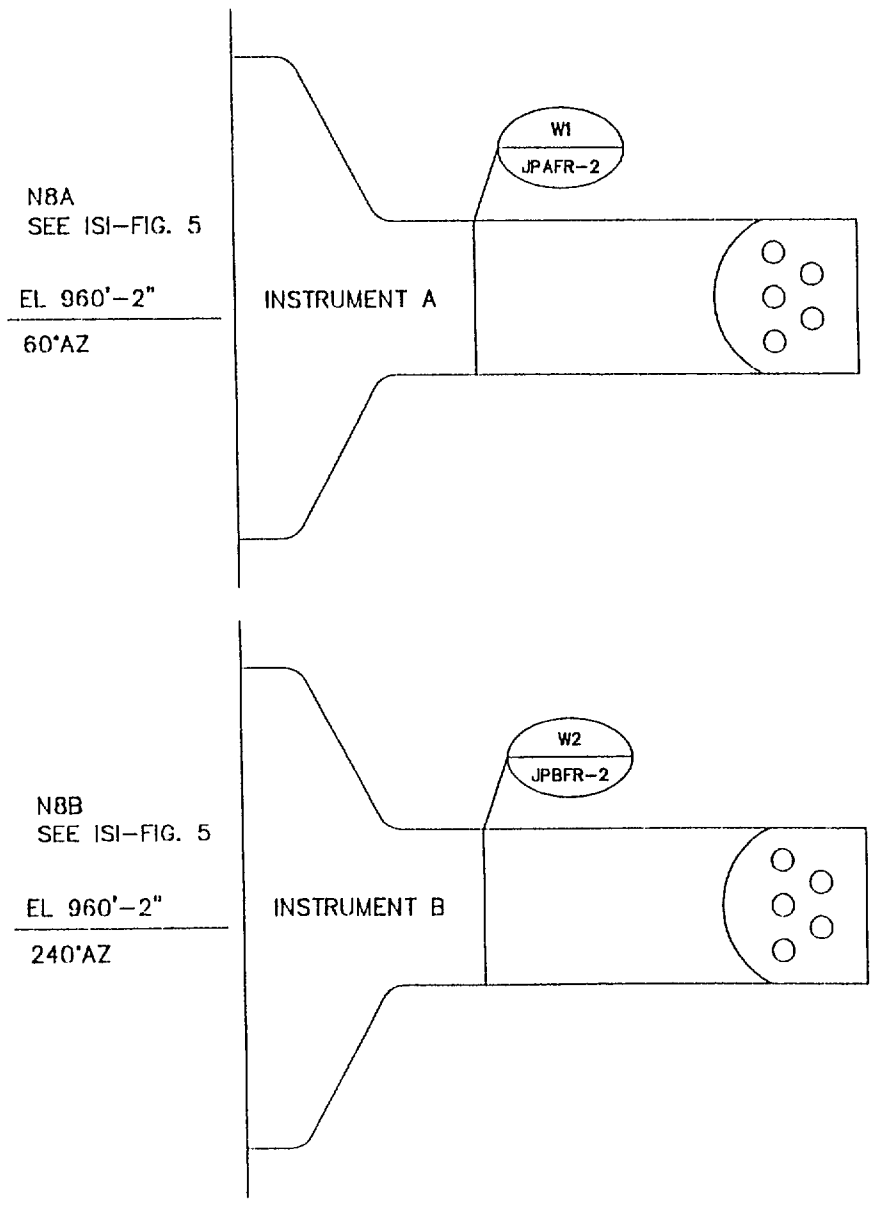

ISI / CONST. = WELD NO.

NOTE: LOCATED IN DRYWELL

REF:	FILE NO:
NSP (M&SP)-- MONTICELLO	ISI
DWN: TJH CHKD: DSW APPD: DSW	
SYSTEM: JET PUMP INSTRUMENT NOZZLE	
LINE:	
DWG: ISI-16	REV: 03

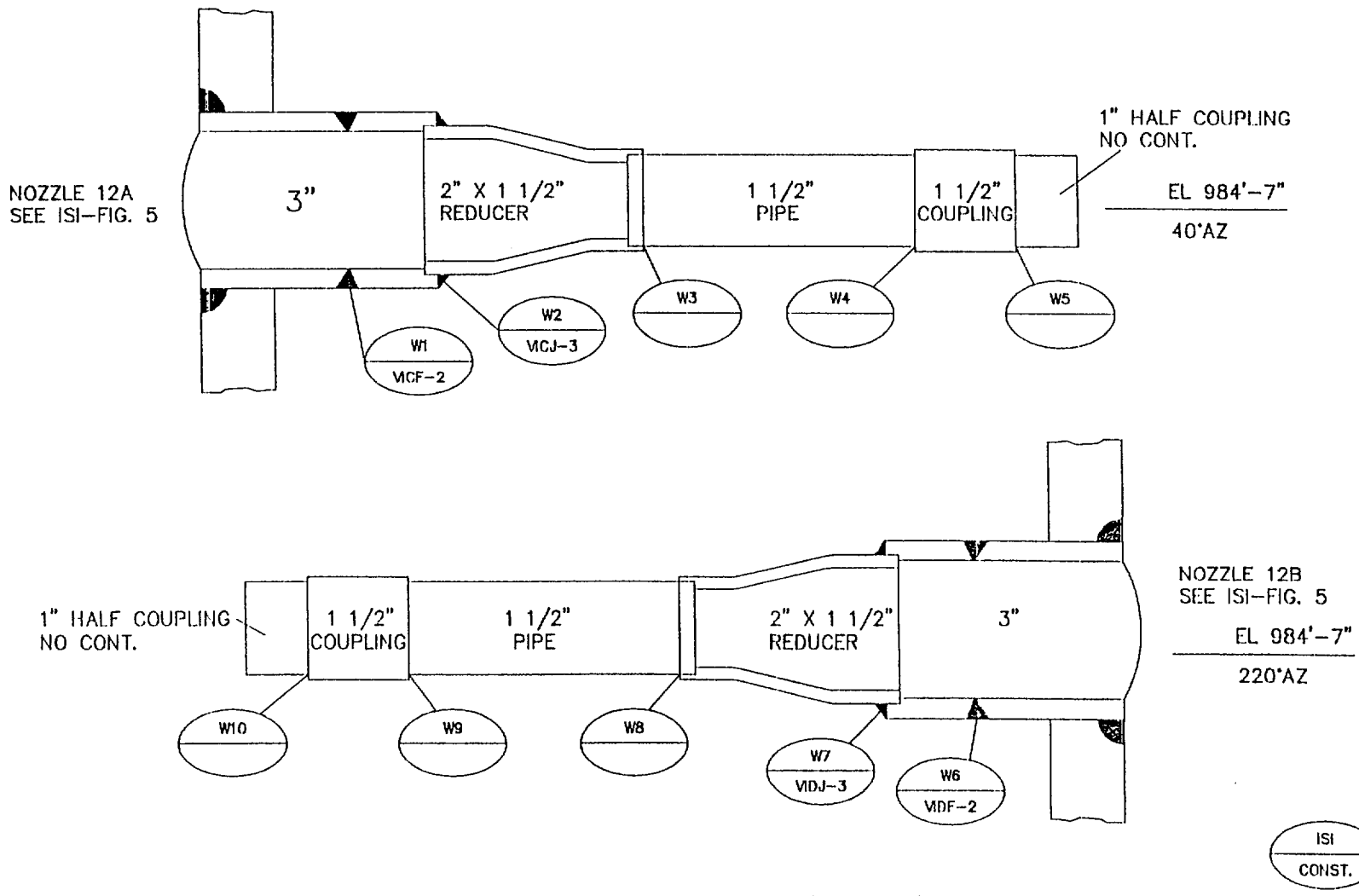

N12A REF: NF-97010
N12B REF: NF-97009

FILE NO:		
NSP (M&SP)– MONTICELLO		ISI
DWN: TJH	CHKD:	APPD:
SYSTEM: RX INSTRUMENT NOZZLES		
LINE: RLM3-1"-DCA & RLM4-1"-DCA		
DWG: ISI-19		REV: 03

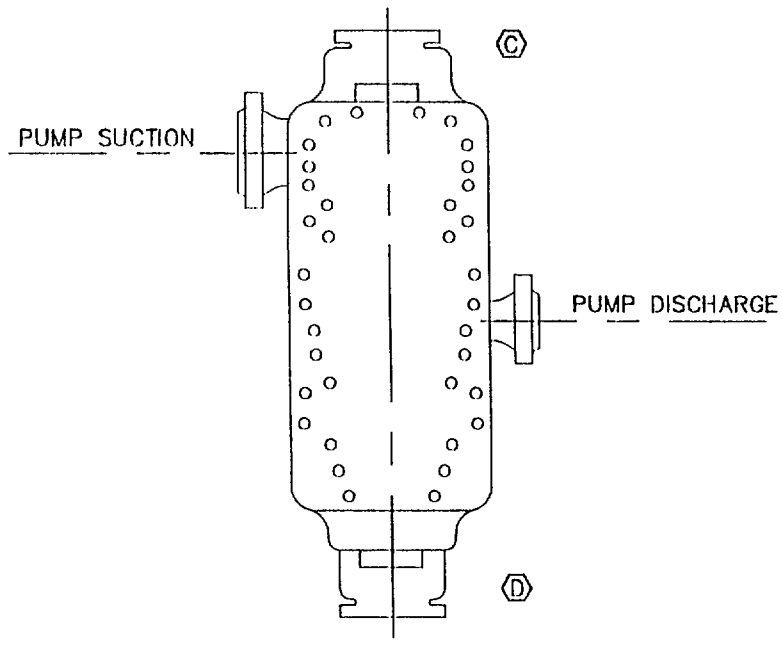

LOOKING DOWN

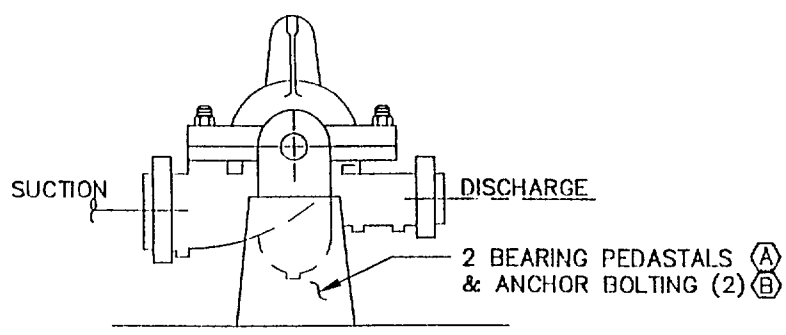

VIEW FROM PUMP END

REACTOR CORE INJECTION COOLANT (RCIC) PUMP
RCIC ROOM EL. 896'-0"

REF:	FILE NO:
NSP (M&SP)-- MONTICELLO	ISI
DWN: TJH CHKD: DSW APPD: DSW	
SYSTEM: RCIC PUMP	
LINE:	
DWG: ISI-47	REV: 03

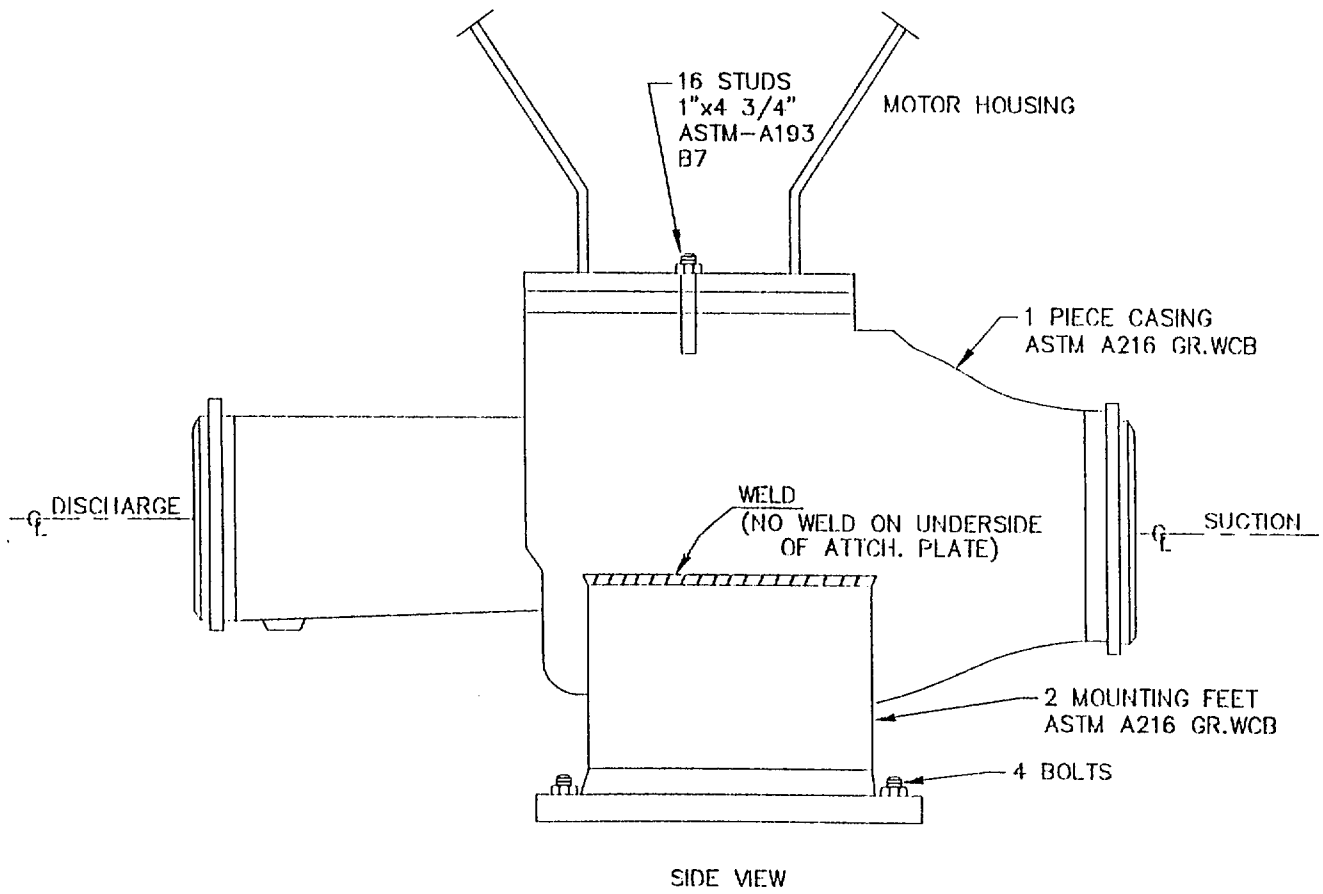

SIDE VIEW

REF: NX-7905-18	FILE NO:
NSP (M&SP)- MONTICELLO	ISI
DWN: TJH CHKD: RAD	APPD: DSC
SYSTEM: RHR PUMPS	
LINE:	
DWG: ISI-48	REV: 04

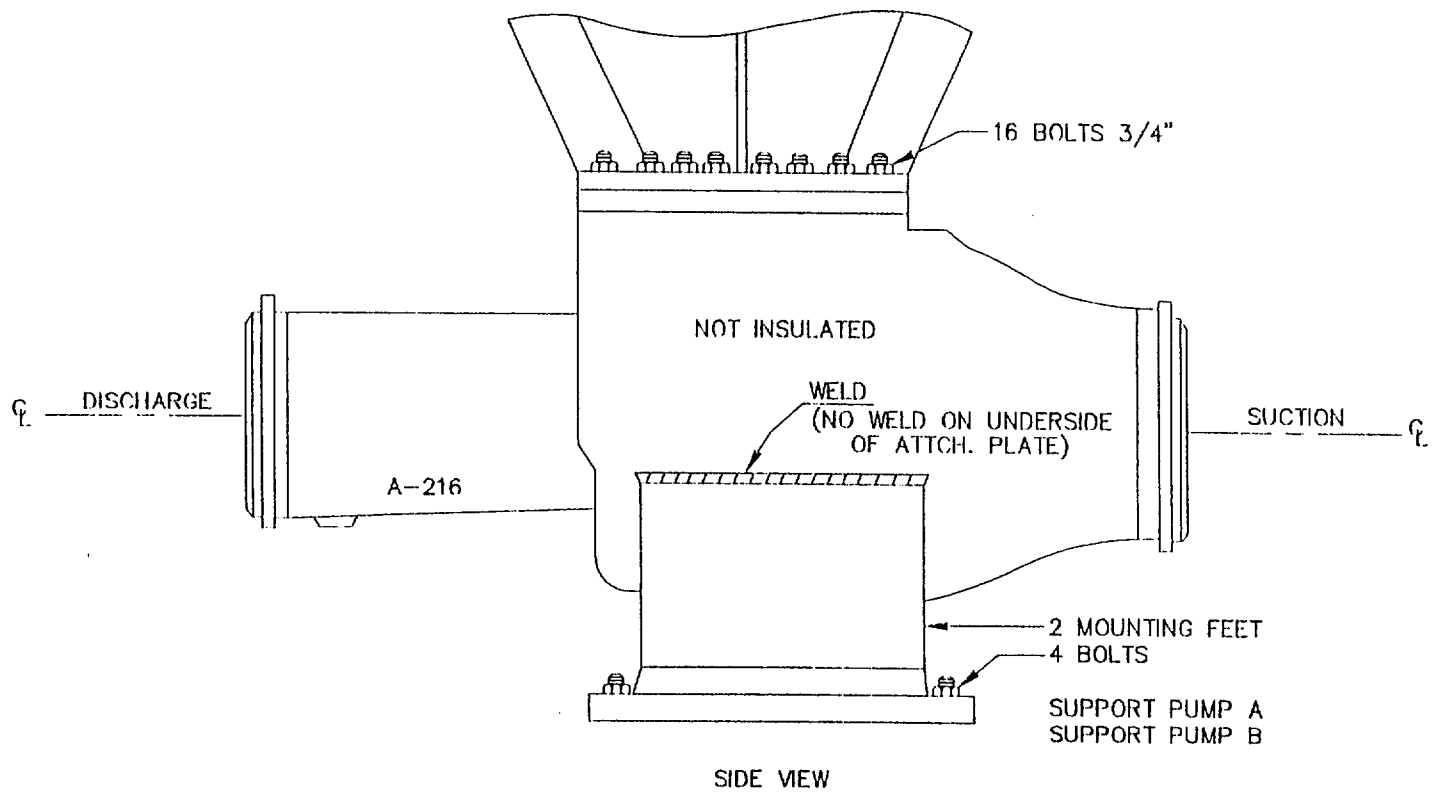

SIDE VIEW

CORE SPRAY PUMPS EL. 896'-0"

PUMP "A" IS LOCATED IN THE RHR A ROOM & CONNECTS WITH NOZZLE N-5B
PUMP "B" IS LOCATED IN THE RHR B ROOM & CONNECTS WITH NOZZLE N-5A

REF: NX-7833-33	FILE NO:
NSP (M&SP)- MONTICELLO	ISI
DWN: TJH CHKD: RSD	APPD:
SYSTEM: CORE SPRAY PUMP SUPPORTS	
LINE:	
DWG: ISI-49	REV: 04

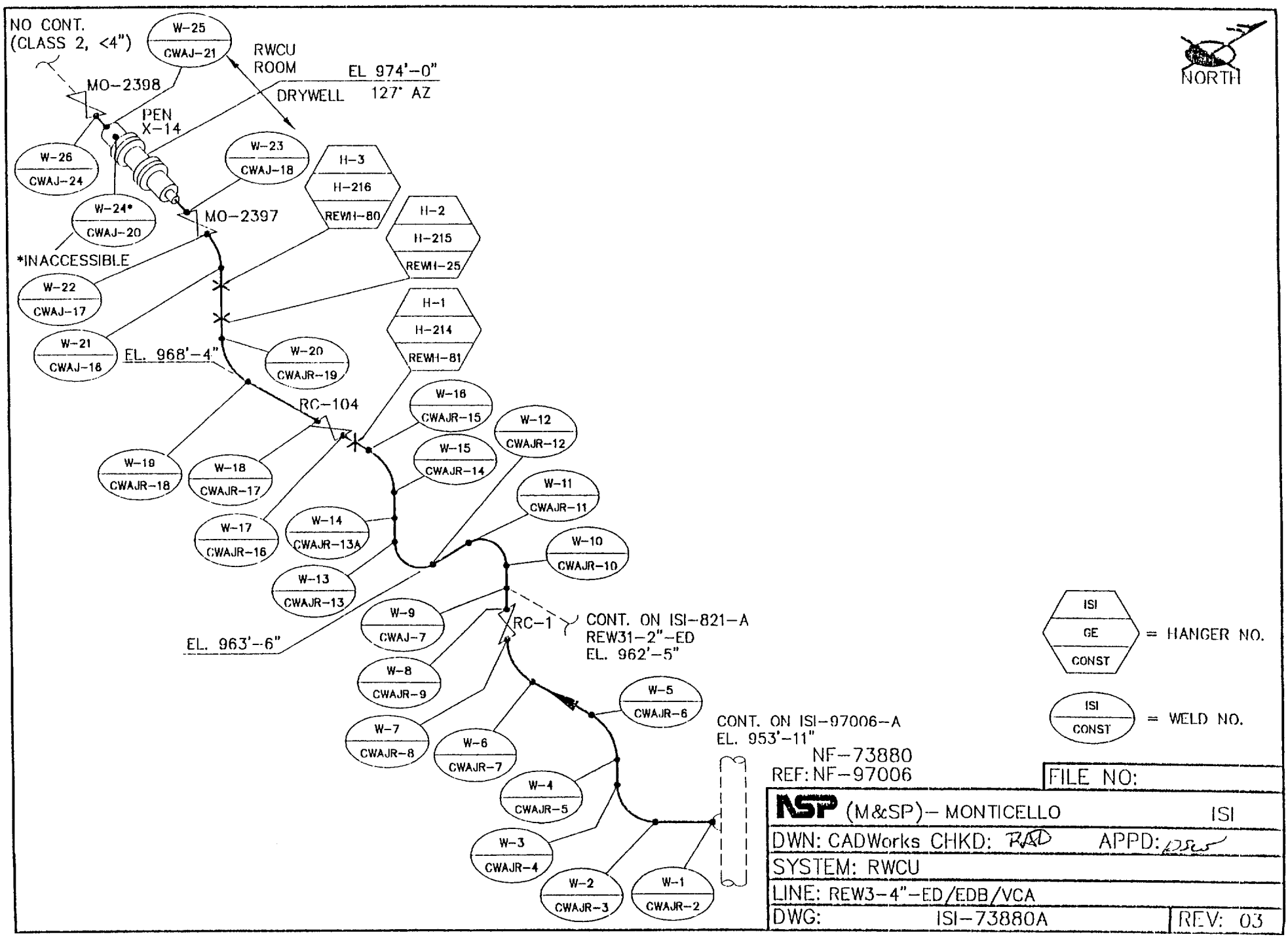
NO CONT.
(CLASS 2, <4")
W-25
CWAJ-21
RWCU
ROOM
EL 974'-0"
DRYWELL
127° AZ
NORTH
MO-2398
PEN
X-14
W-26
CWAJ-24
W-23
CWAJ-18
H-3
H-216
REWH-80
W-24*
CWAJ-20
MO-2397
H-2
H-215
REWH-25
*INACCESSIBLE
W-22
CWAJ-17
H-1
H-214
REWH-81
W-21
CWAJ-16
EL. 968'-4"
W-20
CWAJR-19
RC-104
W-16
CWAJR-15
W-12
CWAJR-12
W-15
CWAJR-14
W-19
CWAJR-18
W-18
CWAJR-17
W-11
CWAJR-11
W-17
CWAJR-16
W-14
CWAJR-13A
W-10
CWAJR-10
W-13
CWAJR-13
EL. 963'-6"
W-9
CWAJ-7
RC-1
CONT. ON ISI-821-A
REW31-2"-ED
EL. 962'-5"
W-8
CWAJR-9
W-5
CWAJR-6
W-7
CWAJR-8
W-6
CWAJR-7
CONT. ON ISI-97006-A
EL. 953'-11"
NF-73880
REF: NF-97006
W-4
CWAJR-5
W-3
CWAJR-4
W-2
CWAJR-3
W-1
CWAJR-2
ISI
GE
CONST
= HANGER NO.
ISI
CONST
= WELD NO.
FILE NO:
NSP (M&SP)- MONTICELLO
ISI
DWN: CADWorks CHKD: RAD
APPD:
SYSTEM: RWCU
LINE: REW3-4"-ED/EDB/VCA
DWG: ISI-73880A
REV: 03

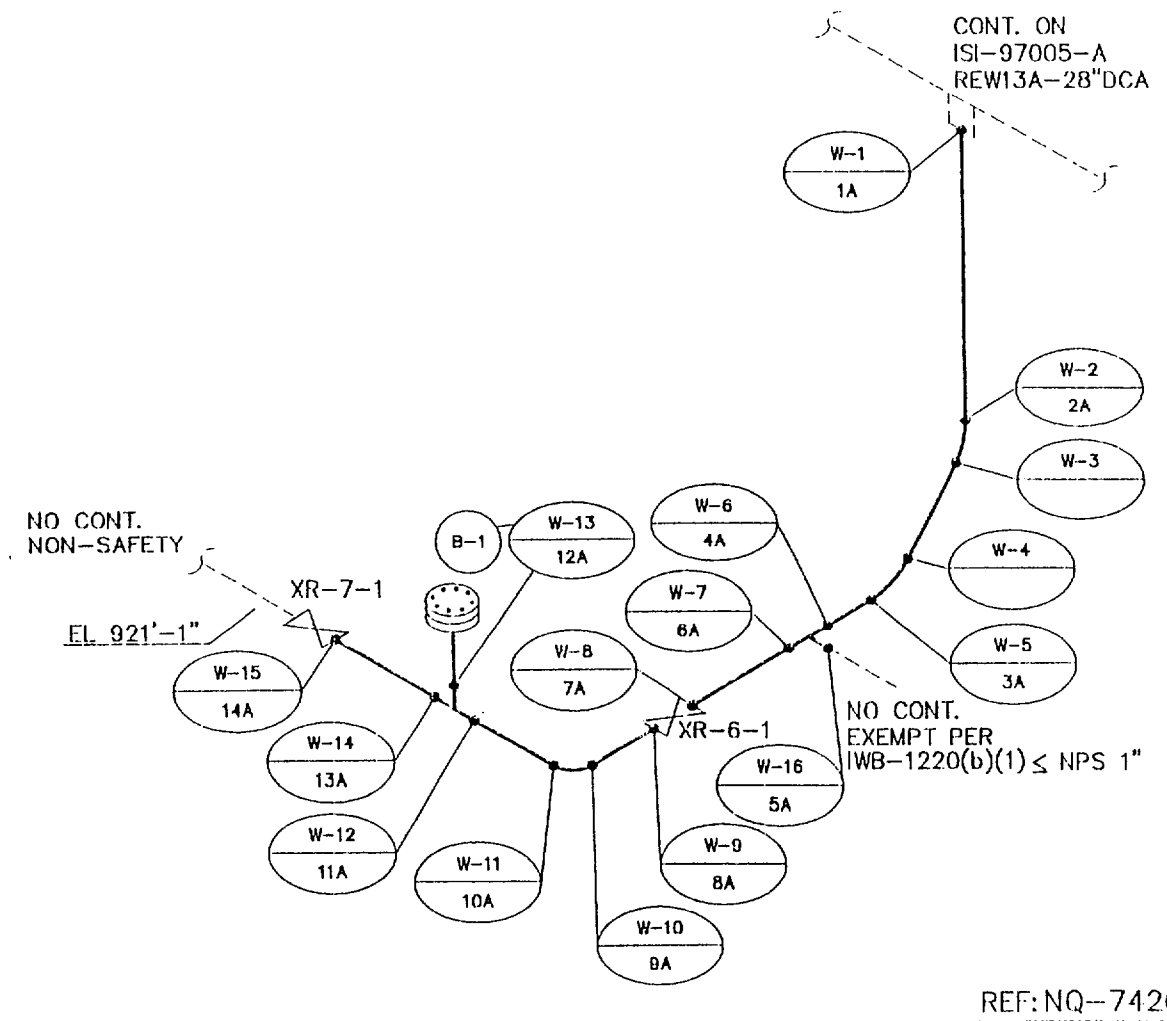

NOTE: LOCATED IN DRYWELL BELOW RECIRC PUMP P-200A SUCTION LINE

REF: NQ-74209-1	FILE NO:
NSP (M&SP)-- MONTICELLO	ISI
DWN: TJH CHKD: RAD APPD:	
SYSTEM: RECIRC. "A" DRAIN	
LINE: REW28-2"-ECB	
DWG: ISI-74209-1A	REV: 04

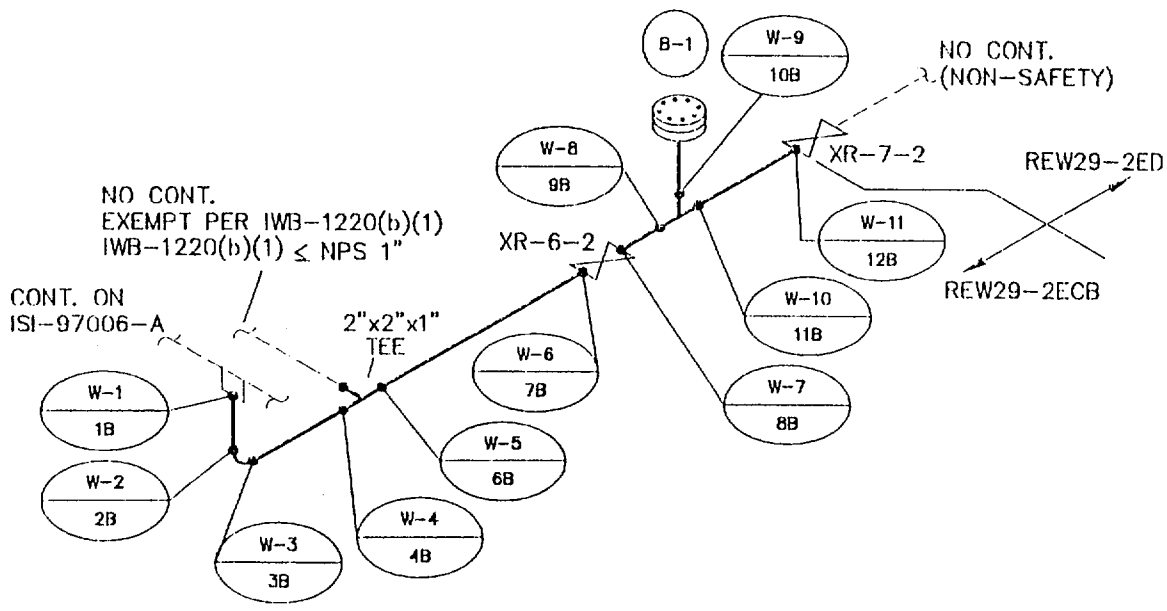

ISI / CONST. = WELD NO.

ISI = BOLT NO.

NOTE: LOCATED IN DRYWELL BELOW RECIRC PUMP P-200B SUCTION LINE

REF: NQ-74210-1	FILE NO:
NSP (M&SP)-MONTICELLO	ISI
DWN: TJH CHKD: RAD APPD:	
SYSTEM: RECIRC. "B" DRAIN	
LINE: REW29-2"-ECB	
DWG: ISI-74210-1A	REV: 04

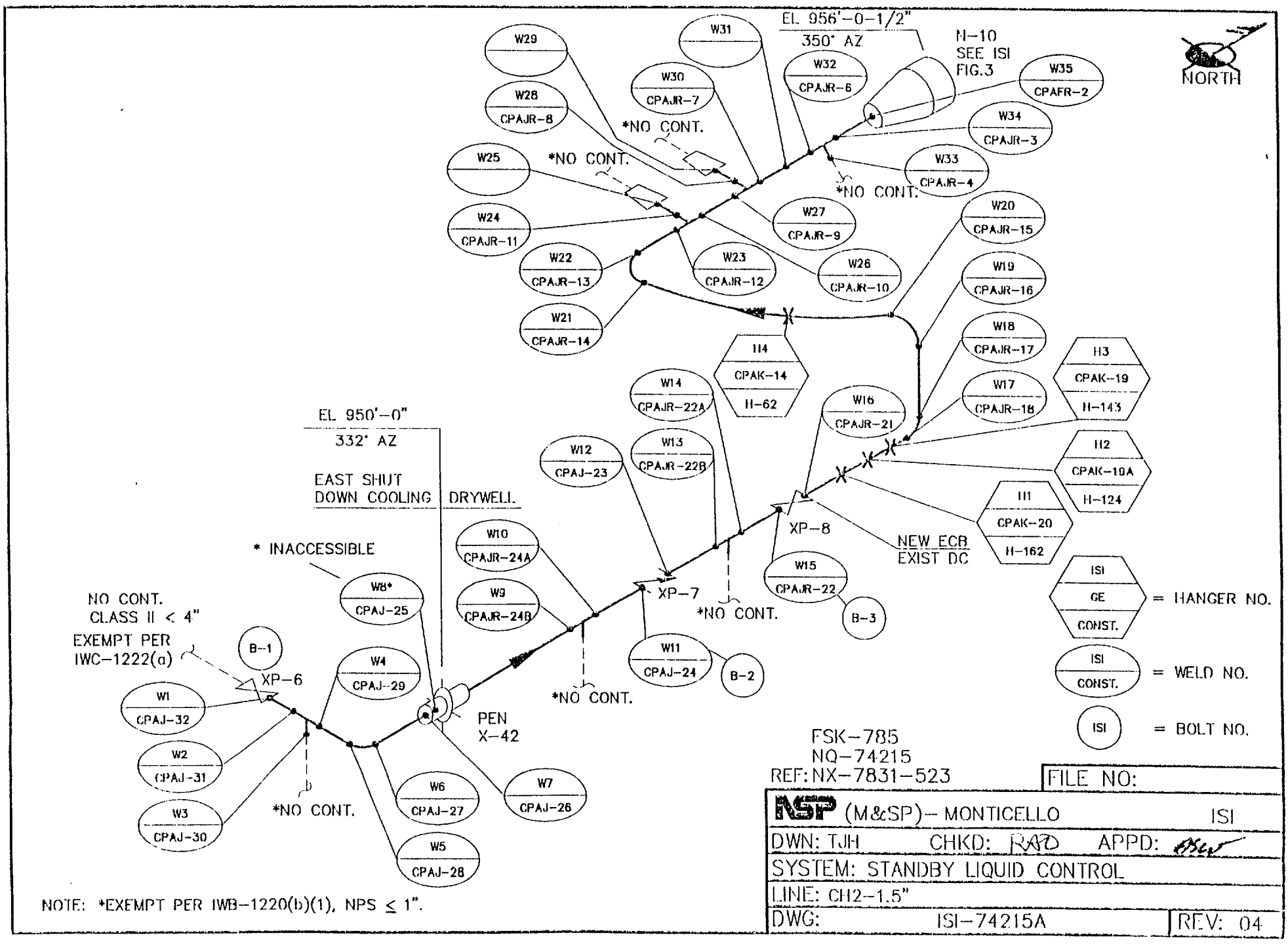

NOTE: *EXEMPT PER IWB-1220(b)(1), NPS ≤ 1".

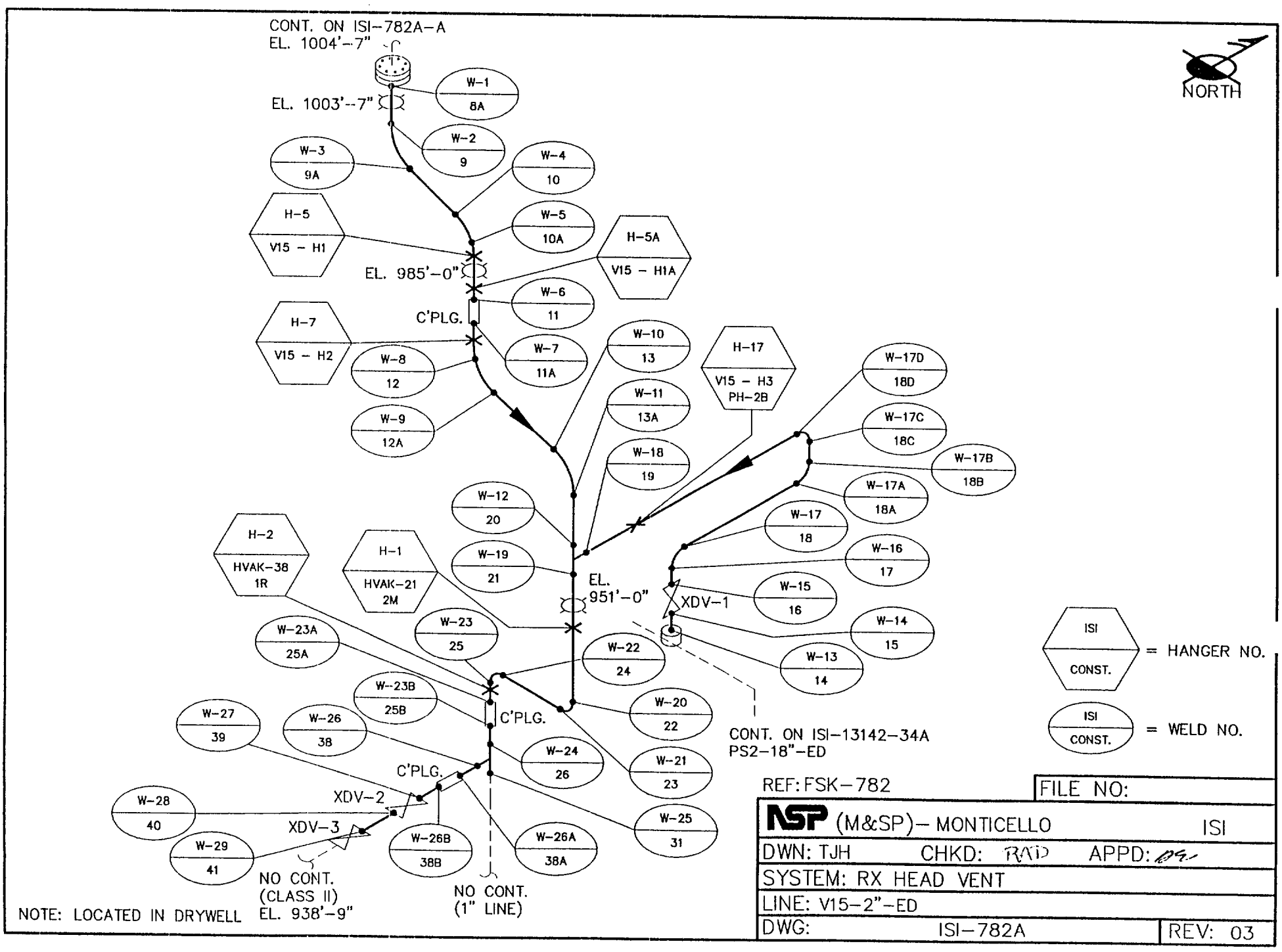
CONT. ON ISI-782A-A
EL. 1004'-7"
EL. 1003'-7"
NORTH
W-1 8A
W-2 9
W-3 9A
W-4 10
H-5 V15 - H1
W-5 10A
H-5A V15 - H1A
EL. 985'-0"
W-6 11
C'PLG.
H-7 V15 - H2
W-7 11A
W-8 12
W-9 12A
W-10 13
W-11 13A
H-17 V15 - H3 PH-2B
W-17D 18D
W-17C 18C
W-17B 18B
W-17A 18A
W-18 19
W-12 20
W-17 18
W-16 17
H-2 HVAK-38 1R
H-1 HVAK-21 2M
W-19 21
EL. 951'-0"
XDV-1
W-15 16
W-14 15
W-13 14
W-23A 25A
W-23 25
W-22 24
W-23B 25B
C'PLG.
W-20 22
W-27 39
W-26 38
W-24 26
W-21 23
C'PLG.
XDV-2
W-28 40
XDV-3
W-25 31
W-29 41
W-26B 38B
W-26A 38A
NO CONT. (CLASS II) EL. 938'-9"
NO CONT. (1" LINE)
CONT. ON ISI-13142-34A PS2-18"-ED
ISI CONST. = HANGER NO.
ISI CONST. = WELD NO.
NOTE: LOCATED IN DRYWELL
REF: FSK-782
FILE NO:
NSP (M&SP)- MONTICELLO
ISI
DWN: TJH
CHKD: RAD
APPD:
SYSTEM: RX HEAD VENT
LINE: V15-2"-ED
DWG: ISI-782A
REV: 03

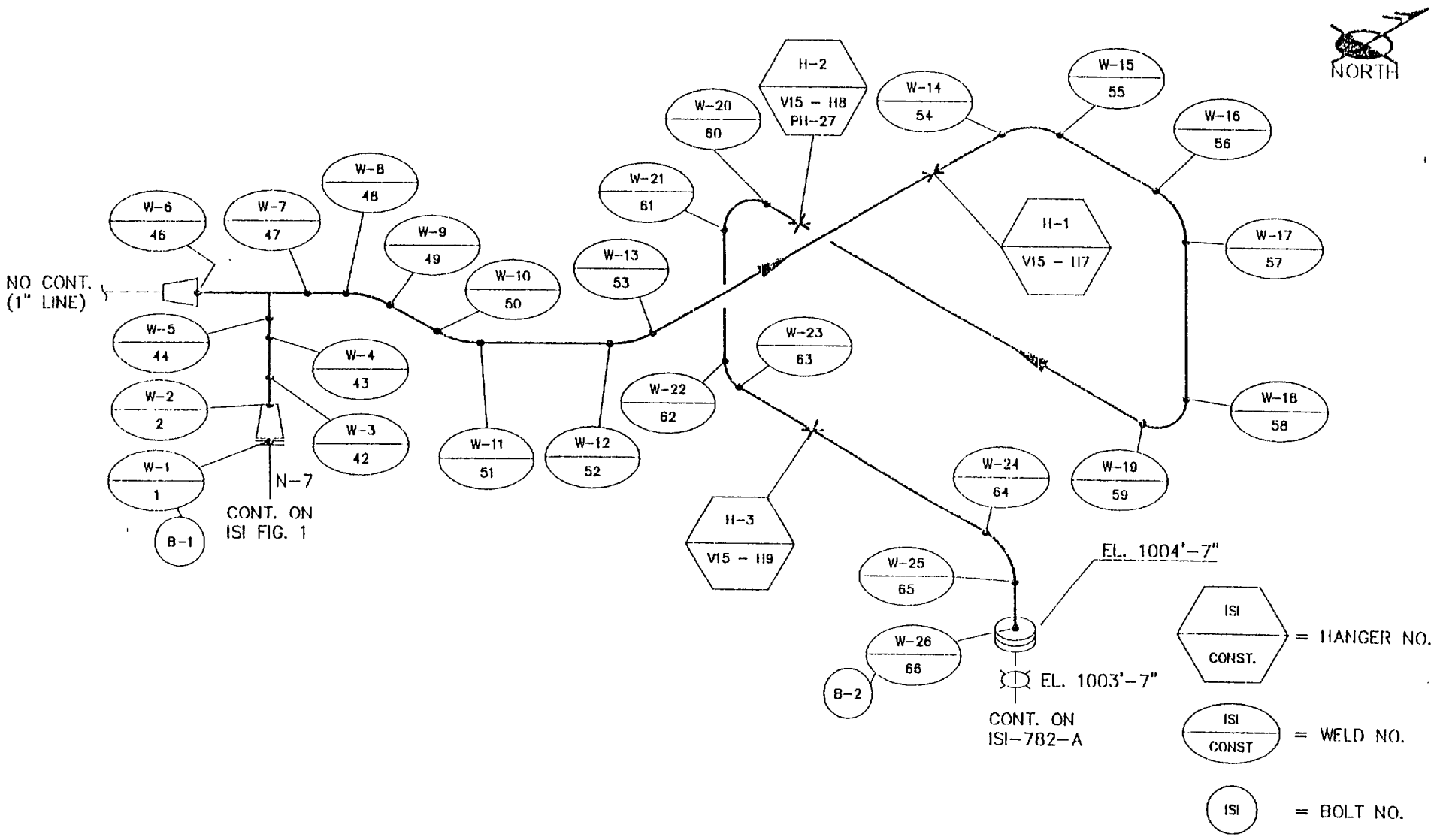

NOTE: LOCATED ON REFUEL FLOOR DURING REFULING OUTAGE

REF: FSK-782A

FILE NO: 312AAR03

RSP (M&SP)- MONTICELLO ISI

DWN: TJH CHKD: RMD APPD:

SYSTEM: RX HEAD VENT

LINE: V15-2"-ED

DWG: ISI-782A-A REV: 04

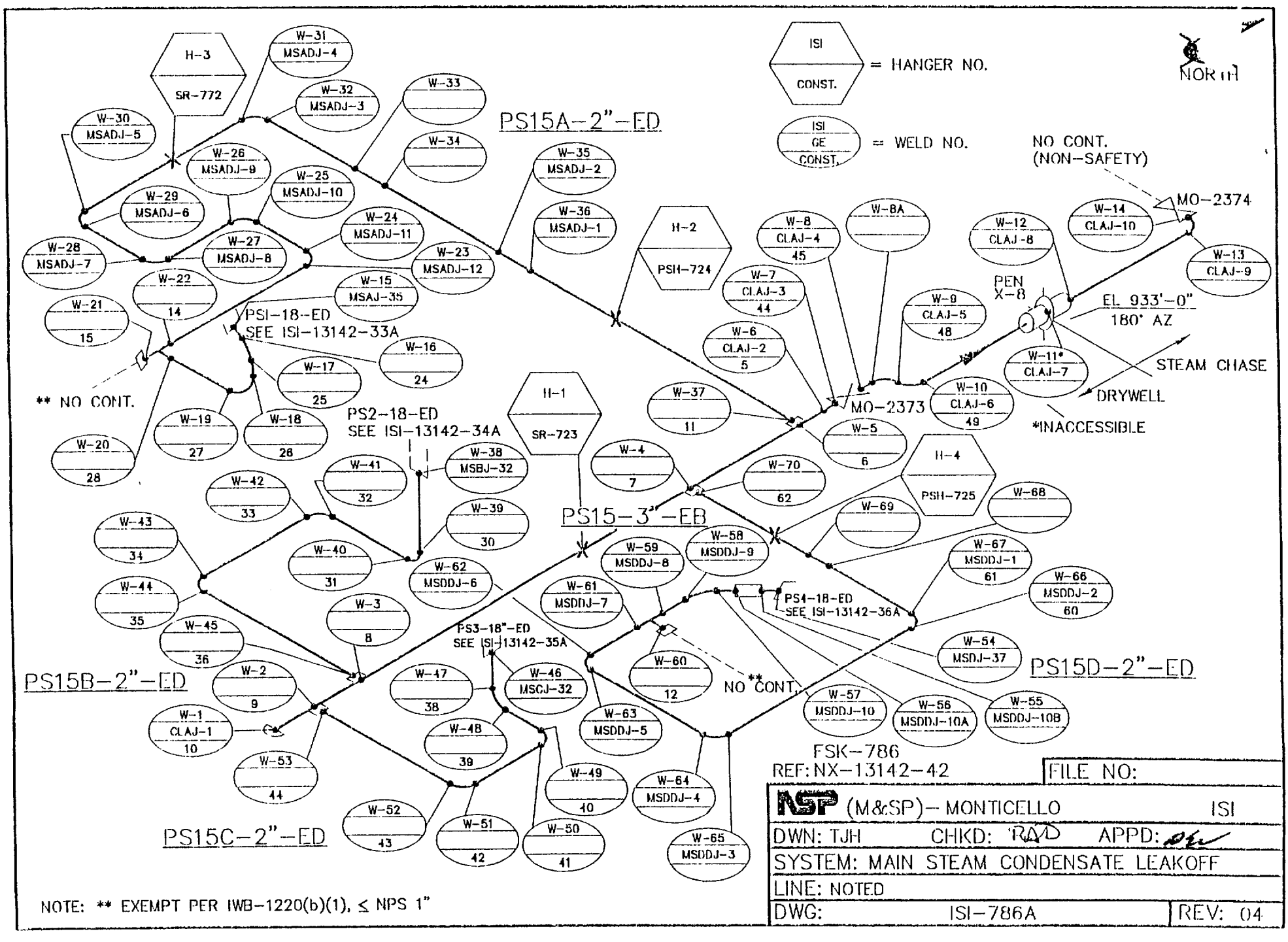

NOTE: ** EXEMPT PER IWB-1220(b)(1), ≤ NPS 1"

FSK-786
REF: NX-13142-42

FILE NO:	
NSP (M&SP)– MONTICELLO	ISI
DWN: TJH CHKD: RAD APPD:	
SYSTEM: MAIN STEAM CONDENSATE LEAKOFF	
LINE: NOTED	
DWG: ISI-786A	REV: 04

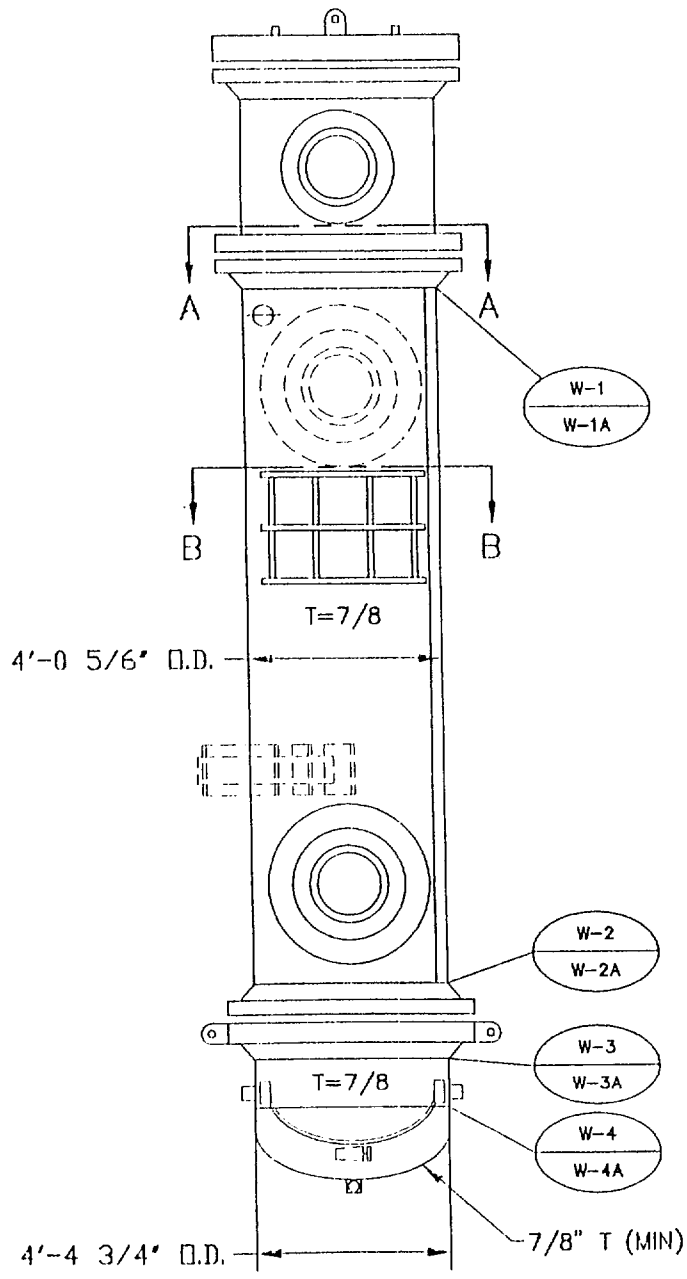

RHR HEAT EXCHANGER E200A

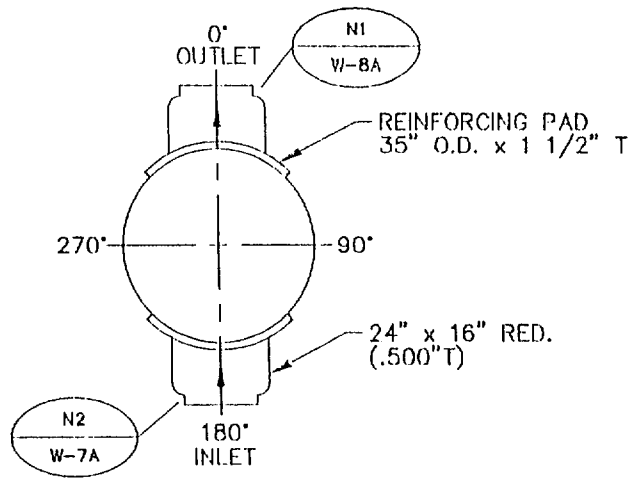

SECTION A-A

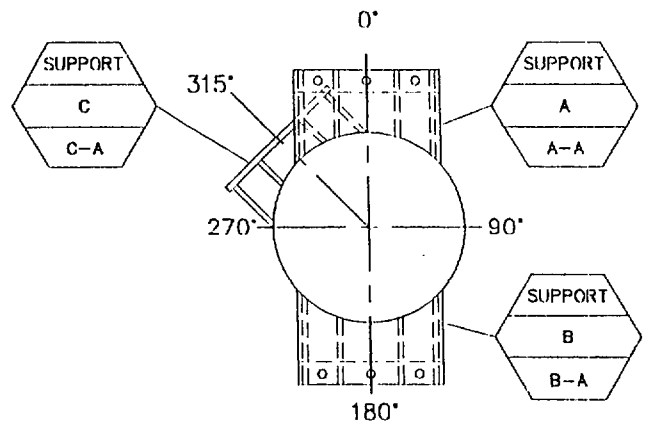

SECTION B-B

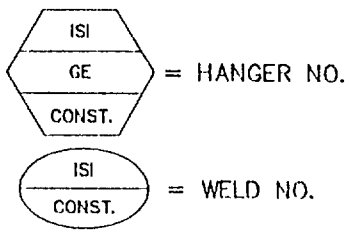

REF: NX-7905-32		FILE NO:
NSP (M&SP)- MONTICELLO		ISI
DWN: TJH	CHKD: RMD	APPD: DA
SYSTEM: RHR HX "A"		
LINE:		
DWG: ISI-7905-32A		REV: 03

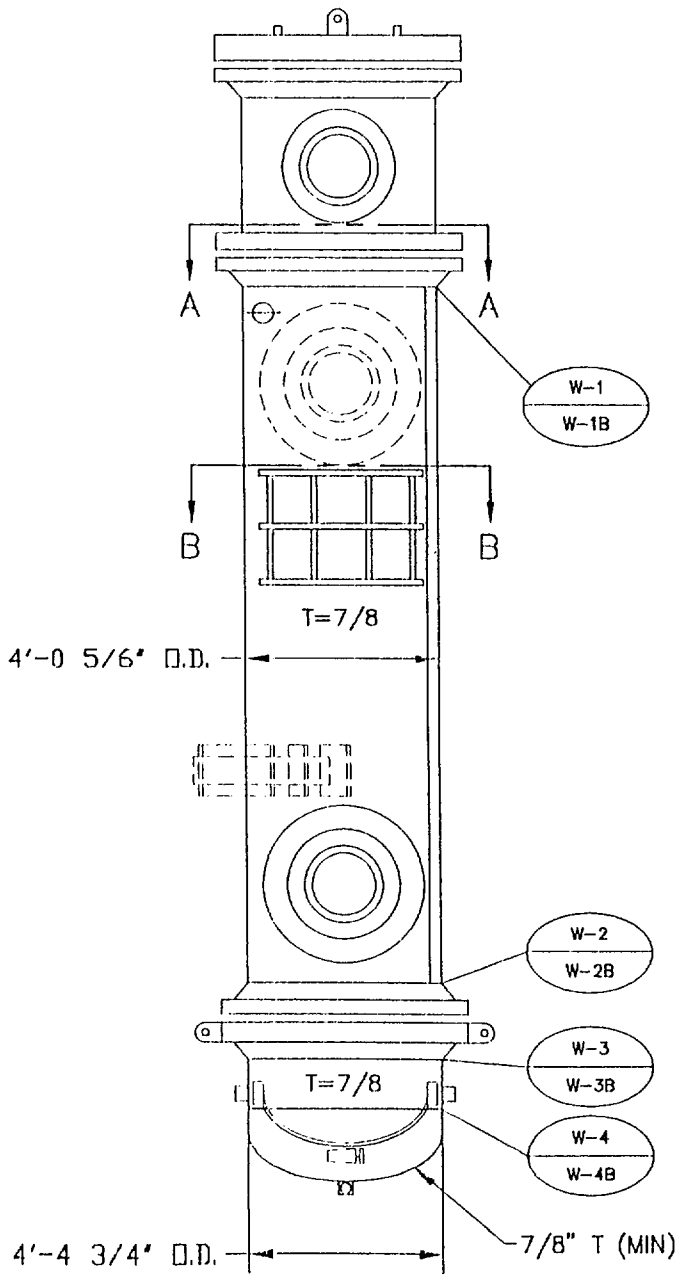

RHR HEAT EXCHANGER E200B

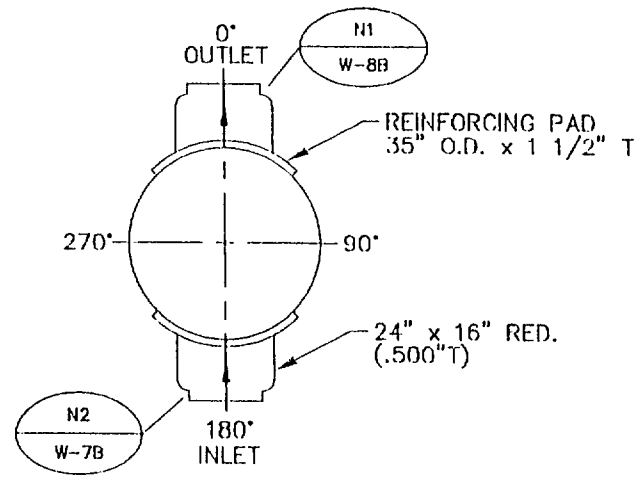

SECTION A-A

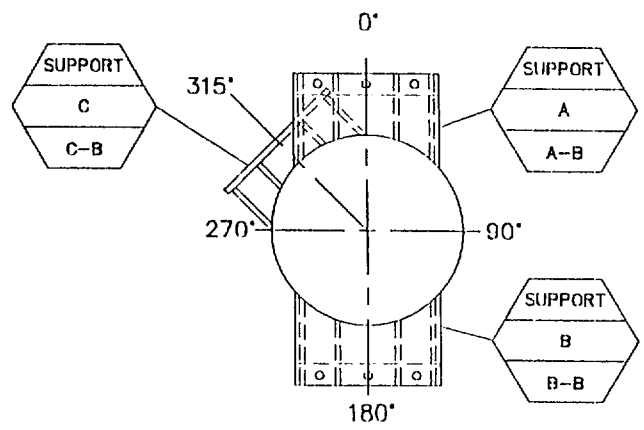

SECTION B-B

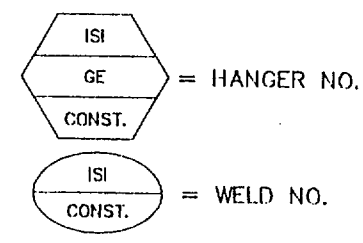

REF: NX-7905-32

FILE NO:	
NSP (M&SP)- MONTICELLO	ISI
DWN: TJH CHKD: RAO APPD:	
SYSTEM: RHR HX "B"	
LINE:	
DWG: ISI-7905-32B	REV: 03

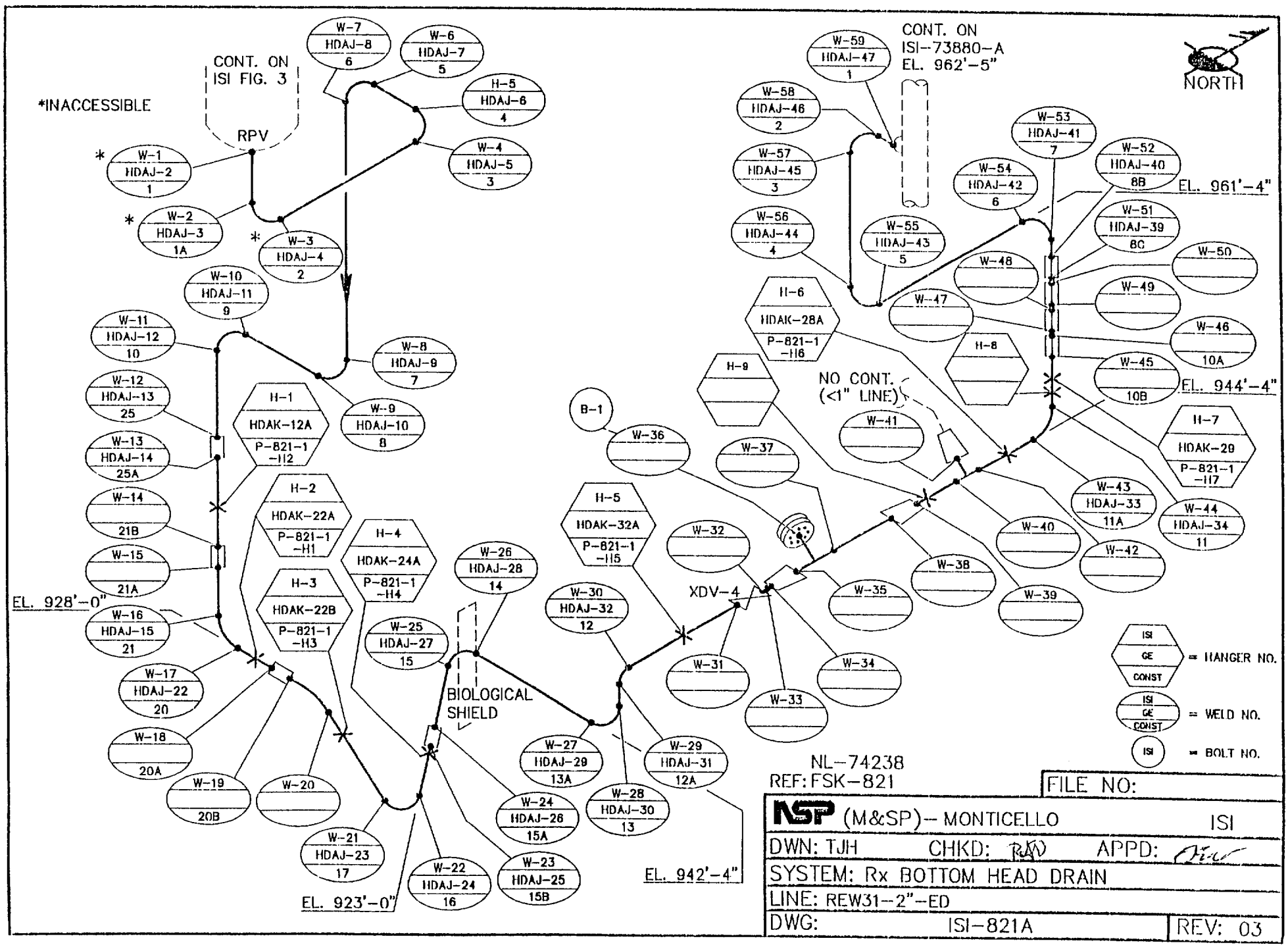

NL-74238
REF: FSK-821

FILE NO:

NSP (M&SP)-- MONTICELLO ISI

DWN: TJH CHKD: RAW APPD:

SYSTEM: Rx BOTTOM HEAD DRAIN

LINE: REW31-2"-ED

DWG: ISI-821A REV: 03

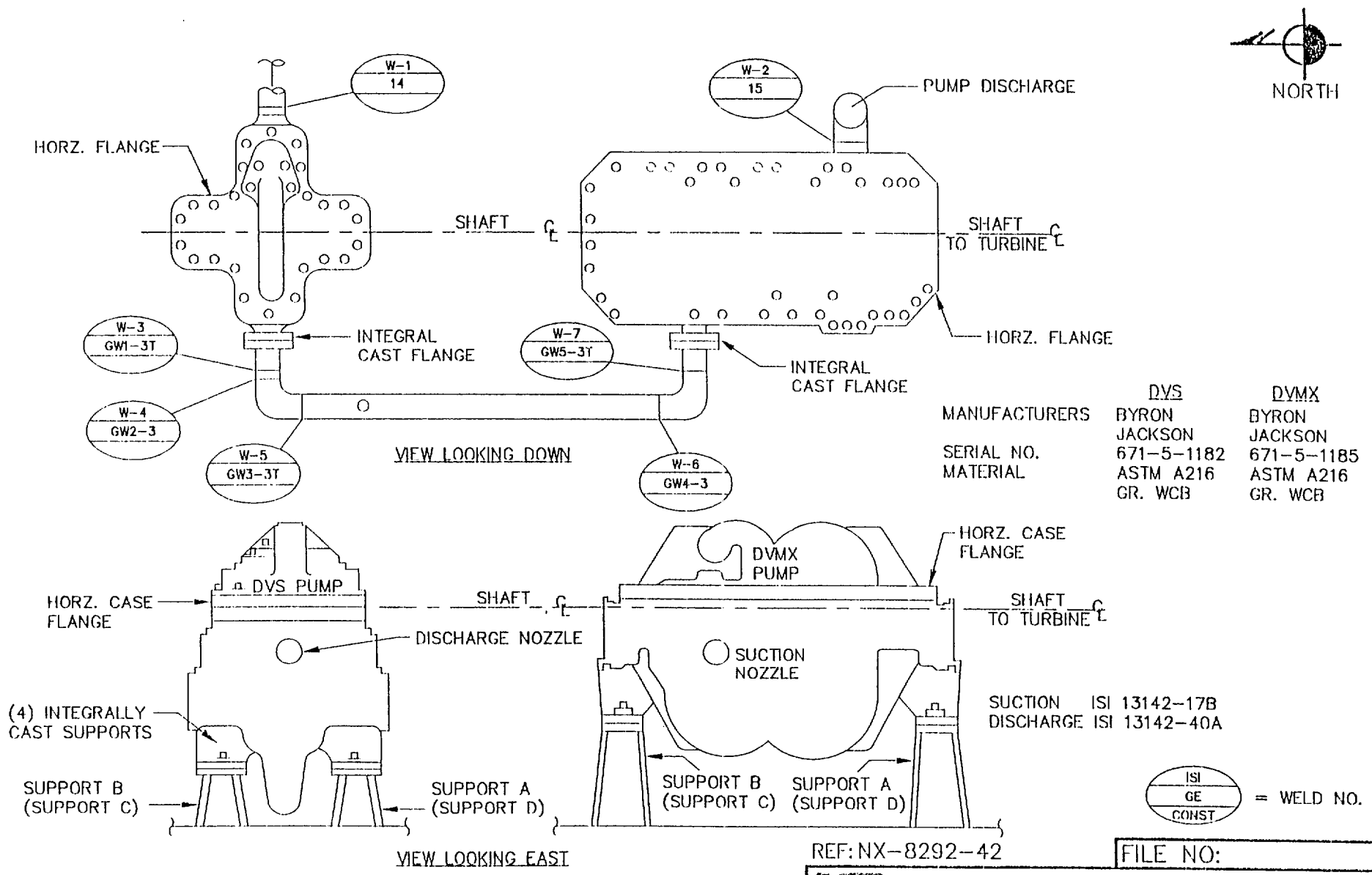
NORTH
W-1
14
W-2
15
PUMP DISCHARGE
HORZ. FLANGE
SHAFT
SHAFT
TO TURBINE
W-3
GW1-3T
INTEGRAL
CAST FLANGE
W-7
GW5-3T
HORZ. FLANGE
INTEGRAL
CAST FLANGE
W-4
GW2-3
W-5
GW3-3T
VIEW LOOKING DOWN
W-6
GW4-3
MANUFACTURERS
SERIAL NO.
MATERIAL
DVS
BYRON JACKSON
671-5-1182
ASTM A216
GR. WCB
DVMX
BYRON JACKSON
671-5-1185
ASTM A216
GR. WCB
HORZ. CASE
FLANGE
DVS PUMP
DVMX
PUMP
HORZ. CASE
FLANGE
SHAFT
SHAFT
TO TURBINE
DISCHARGE NOZZLE
SUCTION
NOZZLE
(4) INTEGRALLY
CAST SUPPORTS
SUCTION ISI 13142-17B
DISCHARGE ISI 13142-40A
SUPPORT B
(SUPPORT C)
SUPPORT A
(SUPPORT D)
SUPPORT B
(SUPPORT C)
SUPPORT A
(SUPPORT D)
ISI
GE
CONST
= WELD NO.
VIEW LOOKING EAST
REF: NX-8292-42
FILE NO:
NSP (M&SP)- MONTICELLO
ISI
DWN: TJH
CHKD: RAD
APPD:
SYSTEM: HPCI PUMPS
LINE:
DWG: ISI 8292-42A
REV: 03
HPCI PUMP ROOM
EL. 896'-0"
HIGH PRESSURE COOLANT INJECTION (HPCI) PUMPS

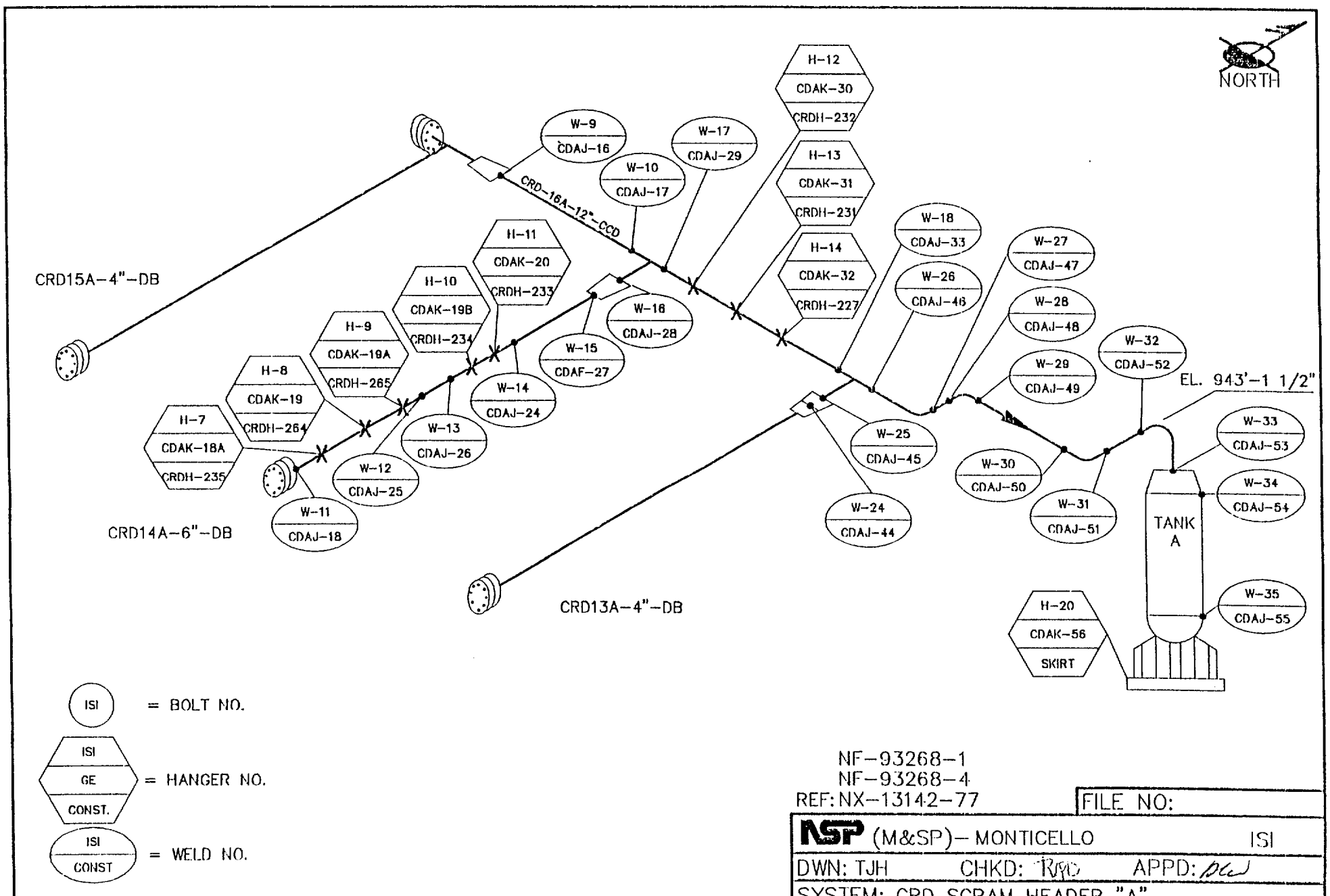

NOTE: LOCATED ON WEST SIDE OF Rx BLDG AT 935' ELEVATION

NF-93268-1
NF-93268-4
REF: NX-13142-77

FILE NO:

NSP (M&SP)- MONTICELLO ISI

DWN: TJH CHKD: RJP APPD: DCW

SYSTEM: CRD SCRAM HEADER "A"

LINE: NOTED

DWG: ISI-93268-1A REV: 03

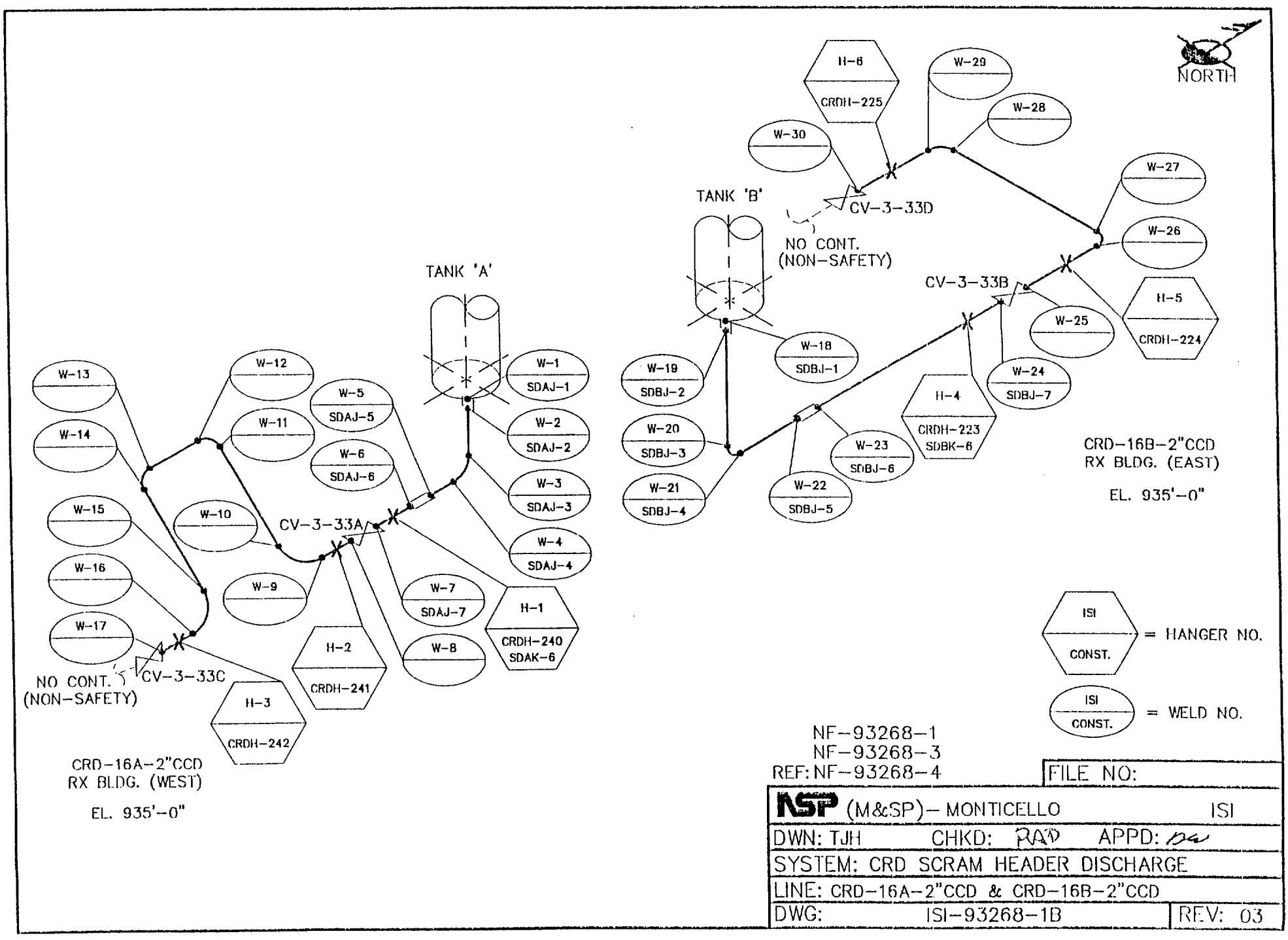

NF-93268-1
NF-93268-3
REF: NF-93268-4

FILE NO:

NSP (M&SP)- MONTICELLO ISI

DWN: TJH CHKD: RAD APPD: DW

SYSTEM: CRD SCRAM HEADER DISCHARGE

LINE: CRD-16A-2"CCD & CRD-16B-2"CCD

DWG: ISI-93268-1B REV: 03

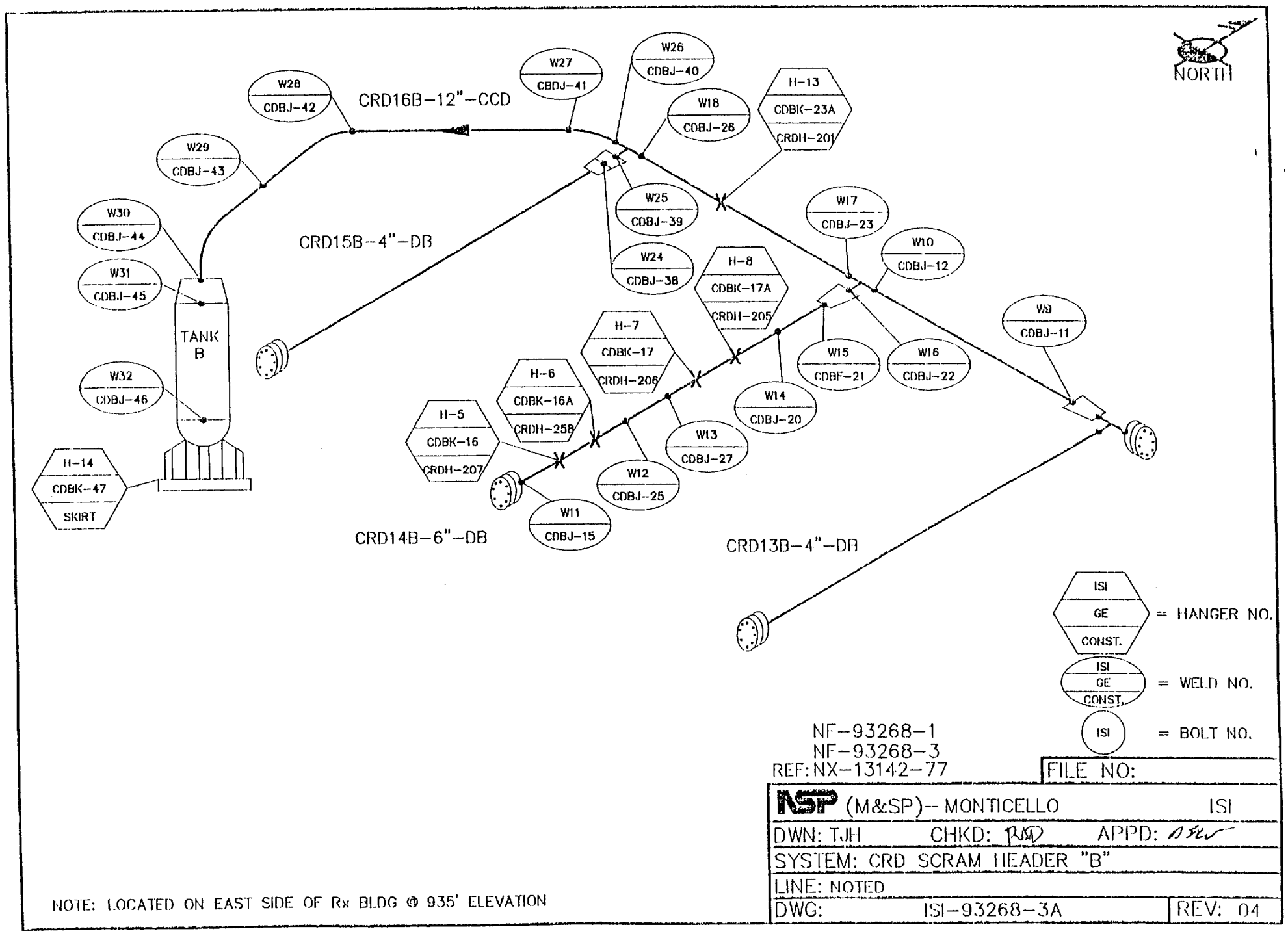

NF-93268-1
NF-93268-3
REF: NX-13142-77

FILE NO:

NSP (M&SP)-- MONTICELLO ISI

DWN: TJH CHKD: RMD APPD: [illegible]

SYSTEM: CRD SCRAM HEADER "B"

LINE: NOTED

DWG: ISI-93268-3A REV: 04

NOTE: LOCATED ON EAST SIDE OF Rx BLDG @ 935' ELEVATION

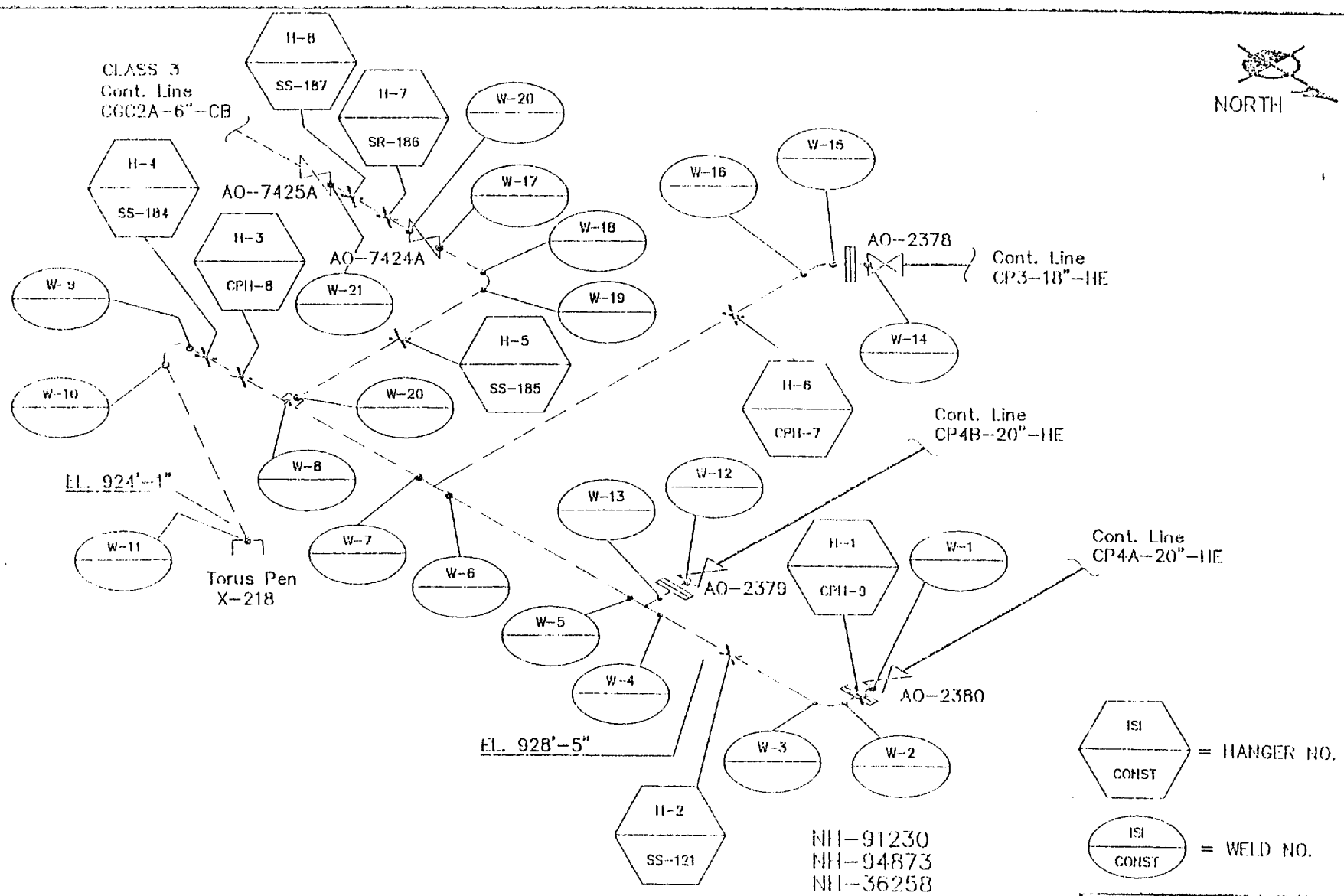

NOTE:

ALL WELDS & HANGERS FROM VALVES AO-2379; AO-2380; AO-2378; AO-7424A TO PEN X-218 EXEMPT PER IWC-1221(f).

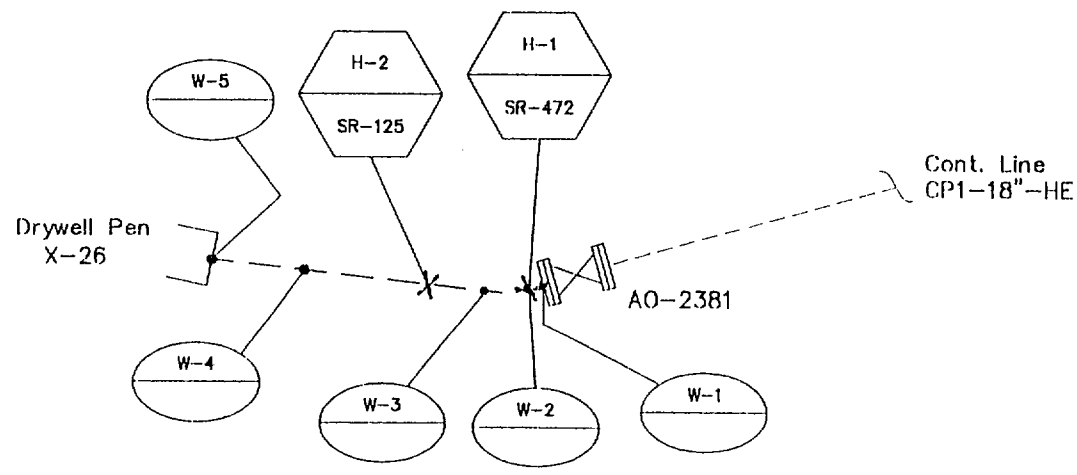

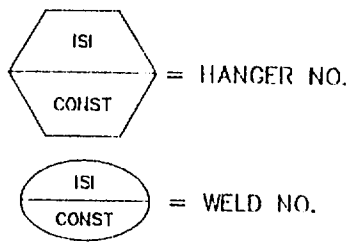

NH-36258
REF: NH-94966

FILE NO: 3166BR00

NSP (M&SP)-- MONTICELLO ISI

DWN: TJH CHKD: RAD APPD: OSW

SYSTEM: CONTAINMENT AIR PURGE

LINE: CP1-18"-HE

DWG: ISI-94966-B REV: 01

NOTE:

ALL WELDS & HANGERS FROM VALVE AO-2381 TO PEN X-26 EXEMPT PER IWC-1221(f).

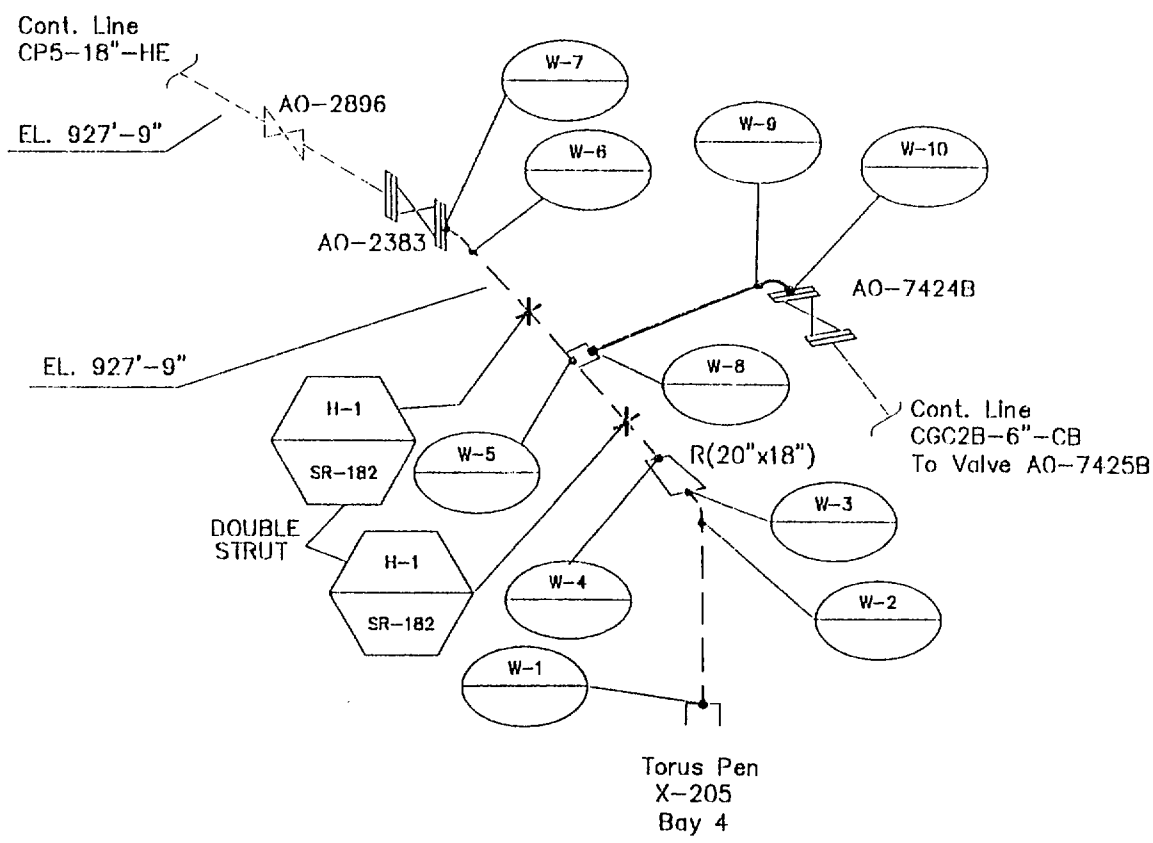

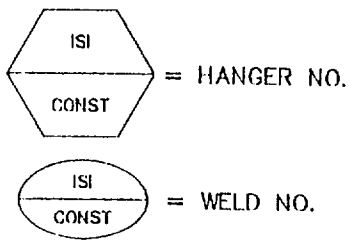

COMBUSTION GAS CONTROL (CGC) OUTLET DIV II

NH-36258
NH-94878
REF: NH-94699

FILE NO: 3199AR00

NSP (M&SP)- MONTICELLO ISI

DWN: TJH CHKD: RAV APPD: DSW

SYSTEM: COMBSTN GAS CNTRL OUTLET DIV 2

LINE: CP5-18"-HE & CGC2B-6"-CB

DWG: ISI-94699-A REV: 01

NOTE:

ALL WELDS & HANGERS FROM VALVE AO-2383 TO PEN X-205 EXEMPT PER IWC-1221(f).

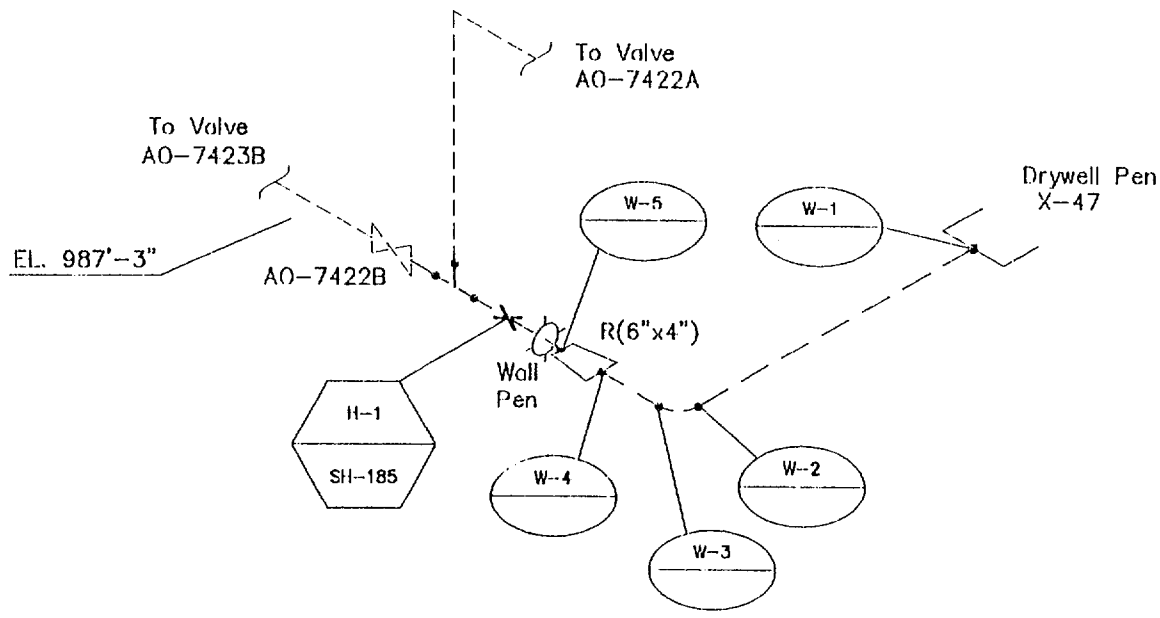

COMBUSTION GAS CONTROL (CGC) INLET DIV I & DIV II

ISI / CONST = HANGER NO.

ISI / CONST = WELD NO.

NH-91230
NH-36258
REF: NH-94879

FILE NO: 3179AR00

NSP (M&SP)-- MONTICELLO ISI

DWN: TJH CHKD: RMD APPD: DSM

SYSTEM: COMBSTN GAS CNTRL INLET DIV 1&2

LINE: CGC1-6"-CB

DWG: ISI-94879-A REV: 01

NOTES:

ALL WELDS & HANGERS FROM VALVE AO-7422B TO PEN X-47 EXEMPT PER IWC-1221(f).

1" CLEARANCE FROM REDUCER-TO-WALL PEN.