LICENSE AUTHORITY FILE COPY

DO NOT REMOVE

Posted
Amdt. 91
to DPR-67

UNITED STATES
NUCLEAR REGULATORY COMMISSION
WASHINGTON, D. C. 20555

March 11, 1988

Docket No. 50-335

Mr. W. F. Conway
Acting Group Vice President
Nuclear Energy
Florida Power & Light Company
P. O. Box 14000
Juno Beach, Florida 33408

Dear Mr. Conway:

SUBJECT: ST. LUCIE UNIT 1 - ISSUANCE OF AMENDMENT RE: SPENT FUEL POOL EXPANSION (TAC NO. 65589)

The Commission has issued the enclosed Amendment No. 91 to Facility Operating License No. DPR-67 for the St. Lucie Plant, Unit No. 1. This amendment consists of changes to the Technical Specifications in response to your application dated June 12, 1987, as supplemented by letters dated September 8, 1987, October 20, 1987 (three letters), December 21, 1987, December 22, 1987, December 23, 1987 (three letters), and January 29, 1988.

This amendment allows the expansion of the spent fuel pool storage capacity from the current 728 fuel assemblies to the proposed 1706 fuel assemblies. The expansion is to be achieved by removing the existing racks and installing new, higher density ones.

The request for the amendment was individually noticed in the Federal Register on August 31, 1987 (52 FR 32852), followed by a biweekly notice on September 23, 1987 (52 FR 38513). A request for a public hearing was filed on September 30, 1987 by Mr. Campbell Rich. By undated letter, Mr. Rich subsequently filed 16 contentions. The 16 contentions are addressed in the enclosed Safety Evaluation. The Safety Evaluation also includes a Final Determination of No Significant Hazards Consideration.

Under NRC regulations, the Commission may issue and make an amendment immediately effective, notwithstanding a request for a hearing, in advance of holding the hearing where, as here, it has been determined that the amendment involves no significant hazards consideration. Such issuance is also consistent with Section 132 of the Nuclear Waste Policy Act of 1982, which requires the Commission to encourage and expedite the effective use of available storage at civilian reactor sites.

The Environmental Assessment related to this action was transmitted to you on February 29, 1988. The Notice of Issuance of Environmental Assessment and Finding of No Significant Impact was published in the Federal Register on March 4, 1988 (53 FR 7065).

A copy of the Safety Evaluation is enclosed. A copy of Notice of Issuance and Final Determination of No Significant Hazards Consideration is also enclosed. The Notice of Issuance will also be included in the Commission's bi-weekly Federal Register notice.

Sincerely,

Original signed by

E. G. Tourigny, Project Manager
Project Directorate II-2
Division of Reactor Projects-I/II
Office of Nuclear Reactor Regulation

Enclosures:
1. Amendment No. 91 to DPR-67
2. Safety Evaluation
3. Notice of Issuance

cc w/enclosures:
See next page

DISTRIBUTION
Docket File
NRC & Local PDRs
PDII-2 R/F
S. Varga
G. Lainas
D. Miller
E. Tourigny
OGC-WF
D. Hagan
J. Partlow
T. Barnhart (4)
Wanda Jones
E. Butcher
ACRS(10)
GPA/PA
ARM/LFMB
Gray File

LA:PDII-2	PM:PDII-2	D:PDII-2	OGC-WF
DMiller	ETourigny:bd	HBerkow	MYoung
03/ \ /88	03/ / /88	03/ / /88	03/ / /88

MY noted revisions

Mr. W. F. Conway
Florida Power & Light Company

St. Lucie Plant

cc:
Mr. Jack Shreve
Office of the Public Counsel
Room 4, Holland Building
Tallahassee, Florida 32304

Resident Inspector
c/o U.S. NRC
7585 S. Hwy A1A
Jensen Beach, Florida 34957

State Planning & Development
Clearinghouse
Office of Planning & Budget
Executive Office of the Governor
The Capitol Building
Tallahassee, Florida 32301

Harold F. Reis, Esq.
Newman & Holtzinger
1615 L Street, N.W.
Washington, DC 20036

John T. Butler, Esq.
Steel, Hector and Davis
4000 Southeast Financial Center
Miami, Florida 33131-2398

Administrator
Department of Environmental Regulation
Power Plant Siting Section
State of Florida
2600 Blair Stone Road
Tallahassee, Florida 32301

Mr. Weldon B. Lewis, County
Administrator
St. Lucie County
2300 Virginia Avenue, Room 104
Fort Pierce, Florida 33450

Mr. Charles B. Brinkman, Manager
Washington - Nuclear Operations
Combustion Engineering, Inc.
7910 Woodmont Avenue
Bethesda, Maryland 20814

Jacob Daniel Nash
Office of Radiation Control
Department of Health and
Rehabilitative Services
1317 Winewood Blvd.
Tallahassee, Florida 32399-0700

Regional Administrator, Region II
U.S. Nuclear Regulatory Commission
Executive Director for Operations
101 Marietta Street N.W., Suite 2900
Atlanta, Georgia 30323

UNITED STATES
NUCLEAR REGULATORY COMMISSION
WASHINGTON, D. C. 20555

FLORIDA POWER & LIGHT COMPANY

DOCKET NO. 50-335

ST. LUCIE PLANT UNIT NO. 1

AMENDMENT TO FACILITY OPERATING LICENSE

Amendment No. 91
License No. DPR-67

1. The Nuclear Regulatory Commission (the Commission) has found that:

   A. The application for amendment by Florida Power & Light Company, (the licensee) dated June 12, 1987, as supplemented by letters dated September 8, 1987, October 20, 1987 (three letters), December 21, 1987, December 22, 1987, December 23, 1987 (three letters), and January 29, 1988, complies with the standards and requirements of the Atomic Energy Act of 1954, as amended (the Act) and the Commission's rules and regulations set forth in 10 CFR Chapter I;

   B. The facility will operate in conformity with the application, the provisions of the Act, and the rules and regulations of the Commission;

   C. There is reasonable assurance (i) that the activities authorized by this amendment can be conducted without endangering the health and safety of the public, and (ii) that such activities will be conducted in compliance with the Commission's regulations;

   D. The issuance of this amendment will not be inimical to the common defense and security or to the health and safety of the public; and

   E. The issuance of this amendment is in accordance with 10 CFR Part 51 of the Commission's regulations and all applicable requirements have been satisfied.

2. Accordingly, Facility Operating License No. DPR-67 is amended by changes to the Technical Specifications as indicated in the attachment to this license amendment, and by amending paragraph 2.C.(2) to read as follows:

   (2) Technical Specifications

   The Technical Specifications contained in Appendices A and B, as revised through Amendment No. 91 , are hereby incorporated in the license. The licensee shall operate the facility in accordance with the Technical Specifications.

3. This license amendment is effective as of the date of its issuance.

FOR THE NUCLEAR REGULATORY COMMISSION

Herbert N. Berkow

Herbert N. Berkow, Director
Project Directorate II-2
Division of Reactor Projects-I/II
Office of Nuclear Reactor Regulation

Attachment:
Charges to the Technical
Specifications

Date of Issuance: March 11, 1988

ATTACHMENT TO LICENSE AMENDMENT NO. 91

TO FACILITY OPERATING LICENSE NO. DPR-67

DOCKET NO. 50-335

Replace the following pages of the Appendix "A" Technical Specifications with the enclosed pages. The revised pages are identified by amendment number and contain vertical lines indicating the area of change. The corresponding overleaf pages are also provided to maintain document completeness.

Remove Pages	Insert Pages
B 3/4 9-3	B 3/4 9-3
5-5	5-5
5-6	5-6
--	5-6a
--	5-6b

3/4.9.12 FUEL POOL VENTILATION SYSTEM-FUEL STORAGE

The limitations on the fuel handling building ventilation system ensures that all radioactive material released from an irradiated fuel assembly will be filtered through the HEPA filters and charcoal adsorber prior to discharge to the atmosphere. The OPERABILITY of this system and the resulting iodine removal capacity are consistent with the assumptions of the accident analyses.

3/4.9.13 SPENT FUEL CASK CRANE

The maximum load which may be handled by the spent fuel cask crane is limited to a loaded single element cask which is equivalent to approximately 25 tons. This restriction is provided to ensure the structural integrity of the spent fuel pool in the event of a dropped cask accident. Structural damage caused by dropping a load in exceed of a loaded single element cask could cause leakage from the spent fuel pool in excess of the maximum makeup capability.

3/4.9.14 DECAY TIME - STORAGE POOL

The minimum requirements for decay of the irradiated fuel assemblies in the entire spent fuel storage pool prior to movement of the spent fuel cask into the fuel cask compartment insure that sufficient time has elapsed to allow radioactive decay of the fission products. The decay time of 1180 hours is based upon one-third of a core placed in the spent fuel pool each year during refueling until the pool is filled. The decay time of 1490 hours is based upon one-third of a core being placed in the spent fuel pool each year during refueling following which an entire core is placed in the pool to fill it. The cask drop analysis assumes that all of the irradiated fuel in the filled pool (7 2/3 cores) is ruptured and follows Regulatory Guide 1.25 methodology, except that a Radial Peaking Factor of 1.0 is applied to all irradiated assemblies.

CONTROL ELEMENT ASSEMBLIES

5.3.2 The reactor core shall contain 73 full length and no part length control element assemblies. The control element assemblies shall be designed and maintained in accordance with the original design provisions contained in Section 4.2.3.2 of the FSAR with allowance for normal degradation pursuant to the applicable Surveillance Requirements.

5.4 REACTOR COOLANT SYSTEM

DESIGN PRESSURE AND TEMPERATURE

5.4.1 The reactor coolant system is designed and shall be maintained:

a. In accordance with the code requirements specified in Section 5.2 of the FSAR with allowance for normal degradation pursuant to the applicable Surveillance Requirements,

b. For a pressure of 2485 psig, and

c. For a temperature of 650°F, except for the pressurizer which is 700°F.

VOLUME

5.4.2 The total water and steam volume of the reactor coolant system is 11,100 ± 180 cubic feet at a nominal T_{avg} of 567°F.

5.5 EMERGENCY CORE COOLING SYSTEMS

5.5.1 The emergency core cooling systems are designed and shall be maintained in accordance with the original design provisions contained in Section 6.3 of the FSAR with allowance for normal degradation pursuant to the applicable Surveillance Requirements.

5.6 FUEL STORAGE

CRITICALITY

5.6.1.a The spent fuel storage racks are designed and shall be maintained with:

1. A k_{eff} equivalent to less than or equal to 0.95 when flooded with unborated water, which includes a conservative allowance of 0.0065 Δk for uncertainties.

CRITICALITY (Continued)

2. A nominal 10.12 inches center to center distance between fuel assemblies in Region 1 of the storage racks and a nominal 8.86 inches center to center distance between fuel assemblies in Region 2 of the storage racks.

3. A boron concentration greater than or equal to 1720 ppm.

4. Neutron absorber (boraflex) installed between spent fuel assemblies in the storage racks in Region 1 and Region 2.

b. Region 1 of the spent fuel storage racks can be used to store fuel which has a U-235 enrichment less than or equal to 4.5 weight percent. Region 2 can be used to store fuel which has achieved sufficient burnup such that storage in Region 1 is not required. The initial enrichment vs. burnup requirements of Figure 5.6-1 shall be met prior to storage of fuel assemblies in Region 2. Freshly discharged fuel assemblies may be moved temporarily into Region 2 for purposes of fuel assembly inspection and/or repair, provided that the configuration is maintained in a checkerboard pattern (i.e., fuel assemblies and empty locations aligned diagonally). Following such inspection/repair activities, all such fuel assemblies shall be removed from Region 2 and the requirements of Figure 5.6-1 shall be met for fuel storage.

c. The new fuel storage racks are designed for dry storage of unirradiated fuel assemblies having a U-235 enrichment less than or equal to 4.0 weight percent, while maintaining a k_{eff} of less than or equal to 0.98 under the most reactive condition.

DRAINAGE

5.6.2 The fuel pool is designed and shall be maintained to prevent inadvertent draining of the pool below elevation 56 feet.

CAPACITY

5.6.3 The spent fuel pool is designed and shall be maintained with a storage capacity limited to no more than 1706 fuel assemblies.

5.7 SEISMIC CLASSIFICATION

5.7.1 Those structures, systems and components identified as seismic Class I in Section 3.2.1 of the FSAR shall be designed and maintained to the original design provisions contained in Section 3.7 of the FSAR with allowance for normal degradation pursuant to the applicable Surveillance Requirement.

5.8 METEOROLOGICAL TOWER LOCATION

5.8.1 The meteorological tower location shall be as shown on Figure 5.1-1.

5.9 COMPONENT CYCLE OR TRANSIENT LIMITS

5.9.1 The components identified in Table 5.9-1 are designed and shall be maintained within the cyclic or transient limits of Table 5.9-1.

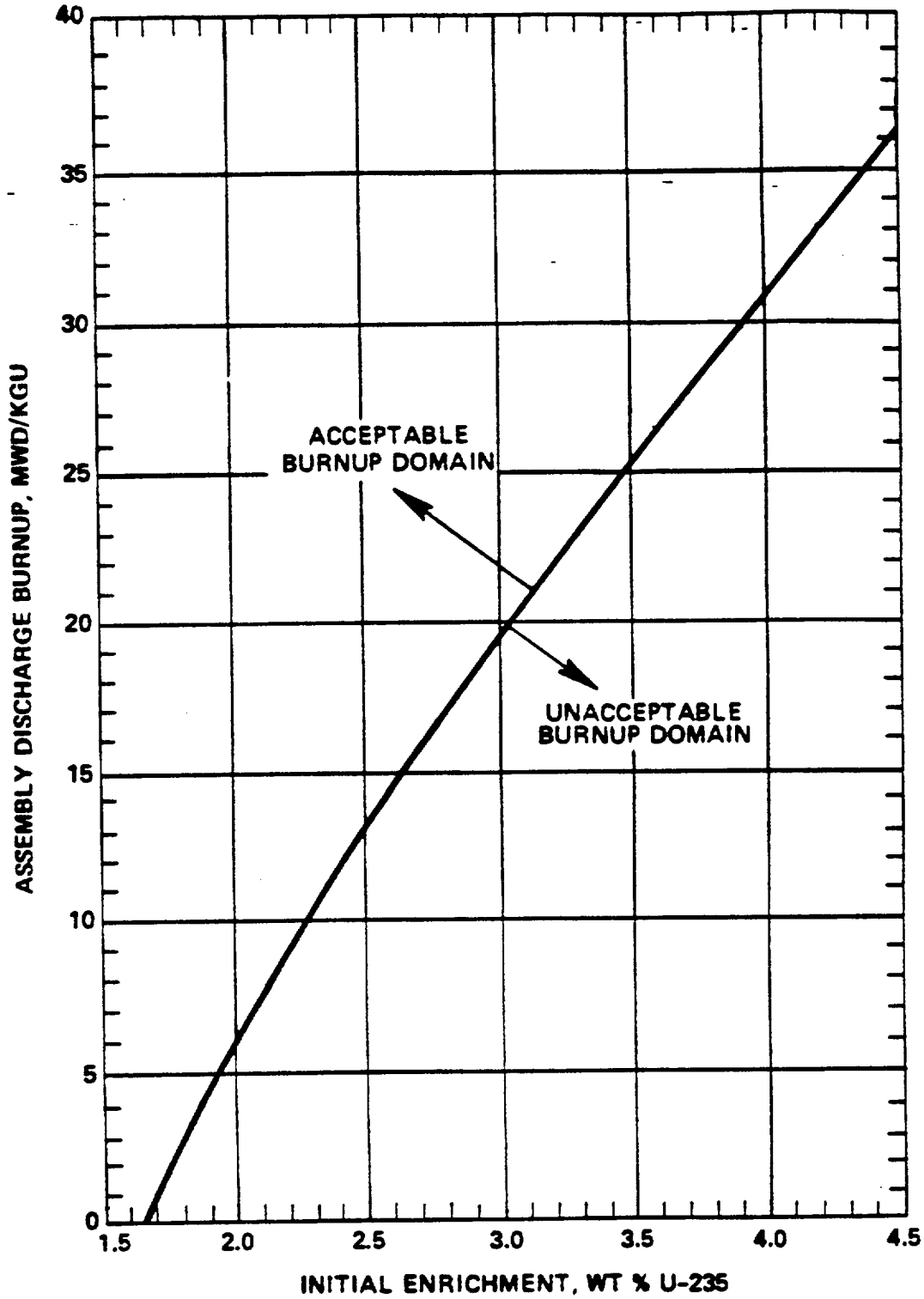

FIGURE 5.6-1

INITIAL ENRICHMENT VS
BURNUP REQUIREMENTS FOR STORAGE OF
FUEL ASSEMBLIES IN REGION 2

ST. LUCIE PLANT UNIT 1

SAFETY EVALUATION

BY THE OFFICE OF NUCLEAR REACTOR REGULATION

RELATING TO THE RERACKING OF THE SPENT FUEL POOL

AT THE ST. LUCIE PLANT, UNIT NO. 1

AS RELATED TO AMENDMENT NO. 91 TO UNIT 1

FACILITY OPERATING LICENSE NO. DPR-67

FLORIDA POWER AND LIGHT COMPANY

DOCKET NO. 50-335

TABLE OF CONTENTS

1. INTRODUCTION

1.1 Licensee Submittal and Staff Review

This report presents the NRC staff safety evaluation for the reracking of the spent fuel pool at the St. Lucie Plant, Unit No. 1. By letter dated June 12, 1987, the Florida Power and Light Company submitted an application to increase the storage capacity of the spent fuel pool, including the appropriate and necessary charges to the Technical Specifications. The licensee requested the increase in storage capacity because the pool lost full core reserve capability following a refueling outage completed in April 1987.

The June 12, 1987 request for the amendment, including the staff's proposed "No Significant Hazards Consideration," was noticed in the Federal Register on August 31, 1987 (52 FR 32852). Further details are addressed in Section 10 of this report.

The application is based on the licensee's "Spent Fuel Storage Facility Modification Safety Analysis Report" which was submitted as an enclosure to the June 12, 1987 application. During its review of the application, the staff requested additional information from the licensee; the additional information was provided by letters dated September 8, 1987, October 20, 1987 (three letters), December 21, 1987, December 22, 1987, and December 23, 1987 (three letters). In addition, the staff met with the licensee on a number of occasions as reported in meeting minutes dated September 11, 1987, October 21, 1987, December 4, 1987, and December 9, 1987. By letter dated January 29, 1988, the licensee submitted Revision 1 to the "Spent Fuel Storage Facility Modification Safety Analysis Report." The purpose of the revision was to incorporate changes to certain sections resulting from the FP&L and NRC correspondence and the meetings with the staff. The additional submittals supplemented and clarified the amendment request and did not alter the action noticed in the Federal Register or affect the staff's initial determination concerning the amendment request (See Section 11).

This report was prepared by the staff of the Office of Nuclear Reactor Regulation. Technical assistance for the structural evaluation of the spent fuel racks and pool was provided by the Brookhaven National Laboratory, Upton, New York. The principal contributors to this report are:

H. Ashar	Structural and Geosciences Branch
L. Kopp	Reactor Systems Branch
G. DeGrassi	Brookhaven National Laboratory (Consultant)
J. Minns	Radiation Protection Branch
I. Spickler	Radiation Protection Branch
J. Ridgely	Plant Systems Branch
F. Witt	Chemical Engineering Branch
P. Wu	Chemical Engineering Branch
E. Tourigny	Project Directorate II-2

1.2 Summary Description of Reracking

The amendment would authorize the licensee to increase the spent fuel pool storage capacity from 728 to 1706 fuel assemblies. The proposed expansion is to be achieved by reracking the spent fuel pool into two discrete regions. New, high-density storage racks (free-standing) will be used. The existing storage racks (free-standing) will be removed, cleared of loose contamination, packaged and shipped off-site.

Region I of the spent fuel pool includes 4 modules (racks) having a total of 342 storage cells. The nominal center-to-center spacing is 10.12 inches. All cells can be utilized for storage and each cell can accept new fuel assemblies with enrichments up to 4.5 weight percent U-235 or spent fuel assemblies that have not achieved adequate burnup for Region 2. Region 2 includes 13 modules (racks) having a total of 1364 storage cells. The nominal center-to-center spacing is 8.86 inches. All cells can be utilized for storage and each cell can accept spent fuel assemblies with various initial enrichments that have accumulated minimum burnups. Each cell in each region is designed to accommodate a single Combustion Engineering or Advanced Nuclear Fuels Corporation (formerly Exxon) PWR fuel assembly or equivalent, from either St. Lucie Unit.

The high-density spent fuel storage rack cells are fabricated from 0.080 inch thick type 304L stainless steel plates. In Region 1, strips of Boraflex neutron absorber material are sandwiched between the cell walls and a stainless steel coverplate. In Region 2, the Boraflex strips are sandwiched between the adjacent cell walls. The cells, which form a module, are welded to a base plate, and a top girdle bar is welded to the top of the module.

The new racks are not doubled-tiered and all racks will sit on the spent fuel pool floor. The amendment application does not involve rod consolidation.

The proposed expansion of the spent fuel pool storage capacity to 1706 fuel assemblies should provide adequate storage until the year 2008, assuming full core offload capability. In addition, the expansion should be adequate until a federal repository is available for spent fuel.

2. CRITICALITY CONSIDERATIONS

2.1 Criticality Analysis

The calculation of the effective multiplication factor, k_{eff}, makes use of the CASMO-2E two-dimensional multigroup transport theory computer code. In addition, for independent verification, criticality calculations were also performed with the KENO-IV Monte Carlo code, as well as the EPRI-CELL and NULIF codes. These independent verification calculations substantiate the CASMO-2E calculations and resulted in a calculational bias of 0.0013 and a 95/95 probability/confidence uncertainty of 0.0018.

In order to calculate the criterion for acceptable burnup for storage in Region 2, calculations were made for fuel of several different initial enrichments. At each enrichment, a limiting reactivity value, which included an additional factor for uncertainty in the burnup analysis, was established. Burnup values that yielded the limiting reactivity values were then determined for each enrichment from which the acceptable burnup domain for storage in Region 2, as shown in proposed technical specification Figure 5.6-1, was obtained. The staff finds this procedure acceptable.

For the Region 1 analysis, the total uncertainty is the statistical combination of the calculated bias uncertainty and manufacturing and mechanical uncertainties due to variations in boron loading in the Boraflex absorber sheets, Boraflex width tolerance, Boraflex thickness, inner stainless steel storage box dimension, flux trap water gap thickness, stainless steel thickness, fuel enrichment and density, and fuel pin pitch. Other uncertainties due to temperature variations and eccentric positioning of the fuel assembly in the storage rack are accounted for by assuming worst-case conditions; i.e., conditions which result in the highest calculated reactivity.

In the Region 2 analysis, the same uncertainties are considered, except there is no water gap and, hence, no gap thickness uncertainty. In addition, an uncertainty due to the burnup analysis is estimated and treated as an additive term in determining the burnup versus enrichment limiting reactivity values in Figure 5.6-1, rather than being combined statistically with the other uncertainties.

The staff concludes that the appropriate uncertainties have been considered and have been calculated in an acceptable manner. In addition, these uncertainties were determined with at least a 95% probability and 95% confidence level, thereby meeting the NRC requirements, and are acceptable.

For Region 1, the rack multiplication factor is calculated to be 0.9409, including uncertainties at the 95/95 probability/confidence level, where fuel having an enrichment of 4.5 weight percent U-235 is stored therein. Fuel of either the Combustion Engineering (CE) or Advanced Nuclear Fuels (ANF) type from St. Lucie Unit 1 or Unit 2 may be stored.

For Region 2, the rack multiplication factor is calculated to be 0.9435 for the most reactive irradiated fuel permitted to be stored in the racks; i.e., fuel with the minimum burnup permitted for each initial enrichment as shown in Figure 5.6-1. The design will accept fuel of 4.5 weight percent U-235 initial enrichment burned to 36.5 MWD/kgU of either the CE or ANF type from Units 1 and 2.

Therefore, the results of the criticality analyses meet the staff's acceptance criterion of k_{eff} no greater than 0.95, including all uncertainties at the 95/95 probability/confidence level.

Most abnormal storage conditions will not result in an increase in the k_{eff} of the racks. For example, loss of a cooling system will result in an increase in pool temperature, but this causes a decrease in the k_{eff} value.

It is possible to postulate events, such as an inadvertent misplacement of a fresh fuel assembly either into a Region 2 storage cell or outside and adjacent to a rack module, which could lead to an increase in pool reactivity. However, for such events, credit may be taken for the Technical Specifications minimum requirement of 1720 ppm of boron in the pool water. The reduction in the k_{eff} value caused by the boron (approximately 0.24) more than offsets the reactivity addition caused by credible accidents.

2.2 Technical Specifications Changes

The following Technical Specifications (TS) changes have been proposed as a result of the replacement of the existing spent fuel pool racks at Unit 1. The staff finds these changes acceptable.

1. TS 5.6.1.a.1 is revised to correspond to the Standard Technical Specifications for Combustion Engineering PWRs (NUREG-0212, Rev. 2).

2. TS 5.6.1.a.2 is revised to show the nominal center-to-center spacing for the new storage racks.

3. TS 5.6.1.a.3 is edited to discuss the boron concentration in the pool water only.

4. TS 5.6.1.a.4 is added to indicate the presence of Boraflex in the storage cells.

5. TS 5.6.1.b and accompanying Figure 5.6-1 are added to show the increased spent fuel enrichment permitted in the pool.

6. TS 5.6.1.c is editorially changed from "b" to "c".

7. TS 5.6.3 is changed to show the capacity of the high-capacity spent fuel storage racks.

2.3 Conclusions

Based on the review described above, the staff finds the criticality aspects of the design of the St. Lucie Unit 1 spent fuel racks to be acceptable. The staff concludes that CE or ANF fuel from Unit 1 or Unit 2 may be safely stored in Region 1 provided that the enrichment does not exceed 4.5 weight percent U-235. Any of these fuel types may also be stored in Region 2 provided they meet the burnup and enrichment limits specified in Figure 5.6-1 of the St. Lucie Unit 1 TS.

3. MATERIAL COMPATABILITY AND CHEMICAL STABILITY

The staff reviewed the compatibility and chemical stability of the high density spent fuel storage rack materials wetted by the pool water. The proposed racks are fabricated from ASME SA-240-3046 austenitic stainless steel sheet and plate material, SA-331-CF3 casting material and SA-564-630 precipitation-hardened stainless steel (to 1100°F) for supports only. The weld filler material utilized in body welds is ASME SFA-5.9, classification ER 308L. The neutron absorber material is Boraflex with a minimum B-10 areal density of 0.0238 gm/cm^2 for the 342 Region 1 storage cells and 0.0098 gm/cm^2 for the 1364 Region 2 storage cells. Boraflex is a silicone-based polymer containing fine particles of boron carbide in a homogeneous, stable matrix.

The annulus spaces that contain the Boraflex in the high density racks are vented to the spent fuel pool. Venting of the annuli will allow gas generated by the chemical and radiolytic decomposition of the silicone polymer binder, when exposed to the thermal and radiation environment, to escape. This will prevent pressure buildup and possible bulging or swelling of the stainless steel absorber sheathing.

The austenitic stainless steel (304L) used in the spent fuel storage racks is not susceptible to stress corrosion cracking and thus, corrosion in the spent fuel storage pool environment should be of little significance during the life of the plant. The spent fuel pool water is processed by filtration and demineralization to maintain water purity and clarity. Dissimilar metal contact corrosion (galvanic attack between the stainless steel rack assemblies and Zircaloy in the fuel assemblies) should not be significant because the materials are protected by highly passivating oxide films and are, therefore, at similar galvanic potentials.

Qualification tests have shown that Boraflex does not possess leachable halogens that could be released into the spent fuel pool water in the presence of radiation. Similar conclusions have been made regarding the leaching of boron from the Boraflex.

Although Boraflex has undergone extensive qualification testing to study the effects of gamma irradiation in various environments and to verify its structural integrity and suitability as a neutron absorbing material, recent anomalies have been identified in the Quad Cities and Point Beach high density spent fuel racks due to Boraflex shrinkage caused by irradiation. To preclude similar problems at St. Lucie Unit No. 1, the specification for the handling and installation of the Boraflex requires that it not be installed in a stretched condition. The use of adhesives in the attachment of the Boraflex to the rack cell is not permitted. In addition, the manufacturing process avoids techniques that could pinch the Boraflex. Therefore, the St. Lucie Plant Unit No. 1 rack design and fabrication process allows expected shrinkage without cracking and gap formation. Furthermore, the spent fuel rack design requires that oversized Boraflex sheets be used to provide a four-inch shrinkage allowance and that allowances for the elastic rebound of the Boraflex material be made before installation should the material be stretched during shipment or handling.

To provide added assurance for detection of degradation of the Boraflex, the licensee has committed to conduct a long-term and accelerated surveillance test program. Each surveillance coupon (5 inches by 15 inches) containing Boraflex of a thickness similar to that used in the racks, is encased in a stainless steel jacket, the alloy of which is identified to that used in the racks. The coupon jacket permits wetting and venting of the specimen to the spent fuel pool water similar to that of the rack. The long-term coupon examination frequency occurs after irradiation times of 90 days, 180 days, 1 year, 5 years, 10 years, 15 years, 25 years and 35 years. The accelerated test coupon examination frequency is after each discharge from the second to ninth discharge rack utilization. Acceptance criteria for continued use are dimensional changes of no more than 2.5% from the original, hardness not less than 90% of the original, and minimal areal density of boron not less than the original.

The staff has reviewed the proposed surveillance program for monitoring the Boraflex in the St. Lucie Plant Unit No. 1 spent fuel storage pool and concludes that the program can reveal deterioration that may lead to loss of neutron absorbing capability during the life of the spent fuel racks. In the unlikely event of Boraflex deterioration, the monitoring program will detect such deterioration and the licensee will have sufficient time to take corrective action. In the event of unanticipated degraded coupons, the storage racks will be inspected and then NRC will be informed if the inspection reveals Boraflex degradation in the storage racks.

Based on the above discussion, the staff concludes that corrosion of the high density racks due to the spent fuel pool environment should be of little significance during the life of the facility. The staff finds that implementation of the proposed surveillance program and the selection of appropriate materials of construction by the licensee, meet the requirements of 10 CFR 50, Appendix A, General Design Criterion (GDC) 61 (regarding the capability to permit appropriate periodic inspection and testing of components) and GDC 62 (regarding preventing criticality by maintaining structural integrity of components and of boron absorber material) and are, therefore, acceptable.

4. STRUCTURAL DESIGN

This evaluation addresses the adequacy of the structural aspects of the proposed amendment. The Brookhaven National Laboratory (BNL) assisted the staff in reviewing various analyses and responses submitted by the licensee. Attached is the technical evaluation report (TER) developed by BNL (Appendix A). The staff accepts the findings and conclusions of the TER by incorporating the TER as a part of this safety evaluation.

The spent fuel storage pool is located in the fuel handling building, which is a Seismic Category I structure. The pool is 33 feet by 37 feet in plan and is 40 feet, 6 inches deep. The reinforced concrete foundation mat, which is 9'-6" thick except in the spent fuel cask storage area where it is 6'-0" thick, provides floor space for the spent fuel racks. The reinforced concrete walls enclosing the spent fuel storage area vary in thickness from 2'-0" to 5'-0". The pool walls are lined with 3/16 inch stainless steel plates and the pool floor is lined with ¼ inch stainless steel plates.

The proposed high-density storage racks consist of individual cells with 8.65 inches by 8.65 inches square cross-section, each of which would accommodate a single Combustion Engineering or ANF PWR fuel assembly. A total of 1706 cells are arranged in 17 distinct rack modules of various arrays of fuel cells. Each rack module is equipped with 3/4 inch thick by 3½ inch high girdle bars at the upper end designed to withstand the impact loads under the postulated seismic conditions. The rack modules are free-standing, and they make surface contact at the girdle bar locations providing a nominal 1½ inch gap between adjacent module cell walls.

The primary areas of review associated with the proposed application are focussed towards assuring the structural integrity of the fuel, fuel cells, rack modules, and the spent fuel pool floor and walls under the postulated (Appendix D of SRP 3.8.4) loads and fuel handling accidents. The major areas of concern and their resolutions are outlined in the following paragraphs.

The fuel handling building analysis and design had been reviewed and accepted during the initial licensing stages. Since the effect of the additional fuel rack load on the pool floor is limited to the mat in the pool area, the licensee reanalyzed the lower portion of the walls, the pool floor, and the effects on the underlying soil. The design-analysis results satisfy the acceptance criteria. Details of the analysis, design and adequacy of the pool, pool liner and its anchorages are discussed in Section 4.5 of Appendix A.

The plant is located on potentially liquefiable soil. During the operating license review, the licensee provided sufficient data and analyses to demonstrate that the factor of safety against liquefaction under a Safe Shutdown

Earthquake (SSE) is more than 2. During this review, the staff expressed a concern about the effects of added weight on liquefaction potential under the postulated seismic condition (i.e., SSE). Based on the research work published by Seed, Idriss and other researchers in the publication, "Liquefaction of Soils During Earthquake (National Academy Press, 1985)," where it was shown that soils subjected to static shear stresses prior to an earthquake have higher resistance to liquefaction, the licensee concluded that the added weight would maintain or improve the resistance to liquefaction. The licensee's report also indicated that the maximum bearing pressure on the soil under the combined effects of dead load (including the added fuel weight) and an SSE is less than the allowable bearing capacity of the soil. The staff accepts the licensee's conclusion and considers the concern as resolved.

The adequacy of considering a single rack model in the seismic analysis was questioned. The seismic motion of a single rack is coupled to the motion of adjacent racks through impact forces and fluid coupling forces. The single rack model constrains the motion of a rack within an imaginary boundary. Maximum displacements cannot exceed one-half the gap to the adjacent racks. For sufficiently strong seismic motion, sliding and tilting motions of the racks could be larger than those predicted by a constrained single rack model resulting in higher impact velocities than would be predicted by a single rack model. Under worst conditions, rows of racks could slide together in one direction and pile up against a pool wall. The additional mass of racks involved in the impact could generate larger loads on the racks and the pool walls. This concern may be more critical for the pool walls, since they are not designed to accomodate seismic impact loads from the fuel racks. To resolve the concern, the licensee performed a two-dimensional multiple rack analysis of a single row of fuel racks to determine the extent of displacement under an SSE. The limited multiple rack analysis indicated that the corresponding displacements are small (less than or equal to 1/2 inch) compared to the minimum clearance provided (3 1/2 inches) between the edge racks and the walls.

A detailed discussion of the other concerns, the comparative results of various analyses and conclusions thereof are provided in Section 4.2 of Appendix A.

Based on its evaluation of the licensee's submittal, the supplementary information provided by the licensee, discussions with the licensee at meetings, and information audited by the staff and its consultant, the staff concludes that the licensee's structural analyses of the spent fuel rack modules and the spent fuel pool are in compliance with the acceptance criteria set forth in the FSAR and consistent with the current licensing practice and, therefore, are acceptable.

5. SPENT FUEL POOL COOLING AND LOAD HANDLING

5.1 Decay Heat Generation Rate

In the June 12, 1987 submittal, the licensee stated that the calculation of the decay heat generating rate was in accordance with the guidelines of Standard Review Plan (SRP) Section 9.1.3 and Branch Technical Position ASB 9-2. For the normal maximum heat load condition, the licensee assumed the pool was filled with one-third core refuelings every 18 months from the St. Lucie Unit 1 reactor and calculated a heat generation rate of 16.42 MBTU/Hr. The abnormal maximum heat load condition had the same assumptions as the normal maximum heat

load condition, except that the 217 empty fuel storage locations were filled with a full core offload. For this condition, the licensee calculated a heat generation rate of 33.70 MBTU/Hr at 169 hours into the refueling outage in lieu of the 150 hours identified in the SRP.

The staff performed an independent calculation of the heat generation rate in accordance with the guidelines in SRP Section 9.1.3 and Branch Technical Position ASB 9-2 assuming the anticipated 18-month operating cycle. The staff calculated a normal maximum heat generation rate of 16.84 MBTU/Hr and an abnormal maximum heat generation rate of 33.56 MBTU/Hr at 169 hours into the refueling outage and 34.96 MBTU/Hr at 150 hours. The licensee's calculation of the normal maximum heat load is not significantly different from the staff's calculated value, and thus, the staff concludes that the licensee has properly calculated the heat generation rate in accordance with the guidelines of the SRP.

5.2 Spent Fuel Pool Cooling System

The spent fuel pool cooling system (SFPCS) consists of one train of equipment, including two 3560 gpm centrifugal pumps and one tube-and-shell heat exchanger with a heat transfer capability of approximately 34 MBTU/Hr, as indicated in the FSAR. After water from the spent fuel pool is cooled by the heat exchanger, it is purified by the spent fuel pool cleanup system. Neither the SFPCS nor the cleanup system are seismic Category I. In the event of a loss of SFPCS, a seismic Category I salt water makeup supply to the spent fuel pool is available from the intake cooling water intertie.

The SPFCS heat exchanger is a low pressure, low temperature component. Maintenance of the heat exchanger, such as tube cleaning or plugging, can be scheduled to be performed when the heat being generated by the spent fuel is low, such as immediately prior to entering a refueling outage when the time until the spent fuel pool reaches boiling will be significantly longer than the 16 hours calculated for the normal maximum heat load case. Thus, the staff concludes that having a single heat exchanger is acceptable.

5.2.1 Heat Removal Capability

Under the normal maximum heat load conditions (16.84 MBTU/Hr) using one SFPCS pump, the SFPCS heat exchanger will maintain the spent fuel pool water temperature below 134°F, which is less than the 140°F temperature guideline specified in SRP Section 9.1.3. For the abnormal maximum heat load condition (33.56 MBTU/Hr) using one SFPCS pump, the heat exchanger will maintain the spent fuel pool water temperature below 167°F, which is well below boiling. Thus, the staff finds that the SFPCS meets the requirements of GDC 44, "Cooling Water" with respect to providing adequate pool cooling under normal heat load conditions following a single failure.

5.2.2 Protection Against Natural Phenomena

The SFP cooling capability was reviewed with respect to the requirements of GDC 2, "Design Bases for Protection Against Natural Phenomena," which includes protection against earthquakes, hurricanes, tornadoes, or other natural events. The SFPCS is not seismic Category I. Under such circumstances, SRP Section 9.1.3 identifies an alternative method for cooling of spent fuel following an earthquake.

Specifically, the SRP discusses use of a seismic Category I spent fuel pool makeup water capability and a seismic Category I ventilation system to process potential radiological releases to the pool building resulting from pool boiling.

5.2.2.1 Makeup Water

The St. Lucie Unit 1 FSAR identifies several makeup water sources. The refueling water storage tank and the primary water tank are seismic Category I sources of water. In addition, salt water can be provided to the spent fuel pool from the intake structure via the seismic Category I intake cooling water system at the rate of 150 gpm.

5.2.2.2 Building Ventilation

The licensee has not taken credit for any ventilation system to mitigate the offsite releases due to boiling of the spent fuel pool water. The licensee has provided the results of the offsite dose consequence analysis in their submittal dated December 23, 1987, which indicates that the maximum calculated adult absorbed thyroid dose is 0.123 rem, the whole body dose is 1.82×10^{-5} rem, and the skin dose is 2.18×10^{-5} rem at the low population zone. Since the thyroid dose is less than 1% of 10 CFR 100 limits (300 rem) and the whole body and skin doses are insignificant, the staff concludes that not using any ventilation system to mitigate the release of radioactivity when the water in the spent fuel pool is boiling meets the requirements of GDC 60, "Control of Releases of Radioactive Materials to the Environment."

5.2.3 Loss of Cooling

In the event that all SFP cooling is lost, the spent fuel pool temperature will increase until boiling is achieved. The licensee has estimated the time from the loss of pool cooling until the pool water boils for the normal maximum heat load condition to be approximately 16.79 hours and for the abnormal heat load condition to be approximately 7.47 hours. The calculated boil-off rates are estimated to be 33.9 gpm and 60.5 gpm, respectively. The staff finds that the intake cooling water system capability is in excess of those estimated boil-off rates and there is reasonable time to take action to provide SFP makeup. The staff further concludes that the makeup water system, without any ventilation system to mitigate the release of radioactive materials, meets the requirements of GDC 2, "Design Bases for Protection Against Natural Phenomena," for ensuring adequate spent fuel pool cooling and prevention of unacceptable radiological releases following an earthquake.

5.3 Heavy Load Handling

The new spent fuel storage racks weigh more than a fuel assembly and its handling tool. Thus, the spent fuel storage racks are considered to be heavy loads. The cask handling crane will be used to move the new storage racks into the fuel handling building and into the cask area within the spent fuel pool, and to remove the existing storage racks from the cask area to the cask decontamination area outside of the fuel handling building. The movement of the cask handling crane is physically limited by the opening in the side wall and the roof of the fuel handling building. This opening is normally closed by a L-shaped door. The cask handling crane, due to this limitation, cannot carry heavy loads over spent fuel. In the previous review of compliance with the guidelines of NUREG-0612, "Control of Heavy Loads at Nuclear Power Plants," the staff concluded in a Safety Evaluation Report dated March 4, 1985, that the cask handling crane met the guidelines of NUREG-0612.

Due to the physical limitations of the lifting capability of the cask handling crane, a new, temporary crane will be installed in the fuel handling building. The temporary crane will be used to move the new storage racks to their appropriate positions in the pool from the cask area and the existing racks from their present locations to the cask area. The temporary crane will also be used as a platform for re-rigging of the new and existing storage racks on the cask handling crane.

In the December 22, 1987 submittal, the licensee provided installation details for the temporary crane. It will be brought into the fuel handling building as five separate pieces (two truck units, two girder pieces, and the hoist unit). The information provided in the December 23, 1987 submittal demonstrated that no piece of the temporary crane will be carried over spent fuel or over racks containing spent fuel. To provide assurance that no part of the temporary crane will be carried over spent fuel, the licensee committed to park the fuel handling machine over the nearest spent fuel assembly as a physical barrier to movement.

In the December 22, 1987 submittal, the licensee provided the results of evaluations of three potential load drop accidents: (1) the temporary crane dropping a spent fuel storage rack in the spent fuel pool; (2) the cask handling crane dropping a spent fuel storage rack into the cask area of the spent fuel pool; and (3) the cask handling crane dropping a spent fuel storage rack onto the temporary crane. In all cases, the radiological consequences of the load drop are less than that for the cask drop accident identified in the FSAR. The rack drop accidents involving the cask handling crane would require the L-shaped door in the fuel handling building to be open. Thus, no credit was taken for retention of the radioactivity by the building. The licensee committed to remove the temporary crane and to perform a load test on it if a heavy load is dropped onto it. When the cask handling crane is moving a rack into or out of the fuel building, the temporary crane will be located next to the north wall of the spent fuel pool. Three new racks will be placed along the north wall beside the cask area. The three new racks will, as part of the fuel shuffling program, contain spent fuel; however, no spent fuel will be placed under the temporary crane parking location. Thus, if the temporary crane were to fail as the result of a load drop from the cask handling crane, no spent fuel would be impacted.

The temporary crane is not single-failure proof. The licensee stated in the December 22, 1987, submittal that the safety factors for all load-bearing components of the temporary crane meet or exceed the safety factors identified in NUREG-0612. All welds will be inspected using either liquid penetrant or magnetic particle methods. The crane hoist will be load-tested to 150% of the rated load. With these measures, the staff finds that the temporary crane meets the guidelines of NUREG-0612.

The licensee provided drawings of the special lifting devices for the new and existing spent fuel storage racks. These drawings demonstrate that the lifting devices are single-failure proof and thus meet the guidelines of NUREG-0612.

In the December 23, 1987 submittal, the licensee provided drawings that show the order in which the existing racks will be removed and the new racks will be installed. These drawings also identify those storage locations that will contain spent fuel and verify that the racks will not be transported over spent fuel or over racks containing spent fuel.

From the above review, the staff finds that handling heavy loads during the reracking procedures is in accordance with the guidelines of NUREG-0612 and, therefore, the requirements of GDC 61, "Fuel Storage and Handling and Radioactivity Control," are met as they relate to proper load handling to ensure against an unacceptable release of radioactivity or a criticality accident as a result of a postulated load drop.

5.4 Light Load Handling

A light load is defined as any load that weighs less than a fuel assembly and its handling tool. In a submittal dated December 22, 1987, the licensee provided the results of an evaluation of light load drops for St. Lucie Unit 1. The licensee reviewed the light load analysis that was performed for St. Lucie Unit 2 at the time of licensing, which was approved by the staff in NUREG-0843, Supplement 3, dated April 1983. The licensee verified that those light loads evaluated for Unit 2 are applicable for Unit 1. From that review, the licensee concluded that the consequences to spent fuel from a light load drop would be less than that for a design basis fuel handling accident, namely the failure of all fuel pins in one fuel assembly.

5.5 Conclusions

Based on the above, the staff concludes that the proposed expansion of the St. Lucie Unit 1 spent fuel pool complies with the requirements of General Design Criteria 2, 44, 60, and 61 and the guidelines of NUREG-0612, and Regulatory Guide 8.8 with respect to the capability to provide adequate spent fuel pool cooling, safe loading handling, and to maintain offsite and onsite radiological releases within acceptable limits. The staff, therefore, finds the proposed expansion to be acceptable.

6. SPENT FUEL POOL CLEANUP SYSTEM

The spent fuel pool (SFP) cleanup or purification system maintains pool water clarity and purity. It consists of a 150 gpm purification pump, a cartridge filter, a mixed bed demineralizer, and the required piping, valves, and instrumentation. The pump draws water from the SFP and discharges through the cartridge filter and the demineralizer. The water is then returned to the pool. It is possible to operate the system with either the filter or demineralizer bypassed.

Radioactivity and impurity levels in the water of a spent fuel pool increase primarily during the refueling operations as a result of fission product leakage from defective fuel elements being discharged into the pool and to a lesser degree during other spent fuel handling operations. The reracking of the spent fuel pool at the St. Lucie Plant, Unit No. 1 will not increase the refueling frequency and fraction of the core replaced after each fuel cycle. Therefore, the frequency of operating the spent fuel pool cleanup system is not expected to increase. Similarly, the chemical and radionuclide composition of the spent fuel pool water will not change as a result of the proposed reracking. Following the discharge of spent fuel from the reactor into the pool, the fission product inventory in the spent fuel and in the pool water will decrease by radioactive decay. Furthermore, experience also shows that there is no significant leakage of fission products from spent fuel stored in pools after the fuel has cooled for several months. Thus, the increased quantity of spent fuel to be stored in the St. Lucie Plant, Unit No. 1 fuel pool will not increase significantly the total fission product activity in the spent fuel pool water during the operation of the pool.

The staff has evaluated the information provided by the licensee. Based on this evaluation and its experience with other high-density spent fuel storage facilities, including evaluation of operating data, the staff has determined that the proposed reracking of the spent fuel pool at St. Lucie Plant, Unit No. 1 will not adversely affect the performance capability or capacity of the spent fuel pool cleanup system. The radioactivity and impurities in the pool water are not expected to increase as a result of the reracking. Replacement of filters or demineralizers would offset any unanticipated increase of the radioactivity and impurity level of the water in the event of a reduction of the decontamination effectiveness.

On the basis of the above discussion, the spent fuel pool rerack is acceptable.

7. RADIATION PROTECTION AND ALARA CONSIDERATIONS

The additional occupational radiation exposure associated with the actual reracking of the pool is estimated by the licensee to be less than 15 person-rem.

In a letter dated October 20, 1987, FPL provided additional information describing action to be taken during SFP modification. Some of the ALARA activities directed to the reduction of occupational radiation include: (a) vacuum cleaning of SFP floors will be performed remotely from the surface; (b) maximum water shielding to reduce dose rates to divers, if they are used ; (c) underwater radiation surveys; (d) calibrated alarming dosimeters and personnel monitoring dosimeters for divers, if they are used; (e) hydrolasing and cleaning of old spent fuel racks; (f) the use of remote operations for rack removal and replacement operations; and (g) SFP purification system augmented by underwater vacuum system to maintain radioactive contamination ALARA and maintain SFP clarity.

The licensee has also provided a description of contained and airborne radioactivity sources related to the SFP water, which may become airborne as a result of failed fuel and evaporation. The staff has reviewed these source terms and finds them acceptable.

Based on our review of the St. Lucie's submittals, we conclude that the projected activities and estimated person-rem doses for this project appear reasonable. FPL intends to take ALARA considerations into account, and to implement reasonable dose-reducing activities. We conclude that FPL will be able to maintain individual occupational radiation exposures within the applicable limits of 10 CFR Part 20, and maintain doses ALARA, consistent with the guidelines of Regulatory Guide 8.8. Therefore, the proposed radiation protection aspect of the SFP rerack is acceptable.

8. ACCIDENT ANALYSES

The staff has reviewed the accidental fission product releases that could occur at the St. Lucie Unit 1 facility in conjunction with the proposed reracking of the SFP. The only potential releases that have not been previously analyzed by the staff as part of the original SER are the potential offsite consequences of the dropping of a cask into the reracked full SFP and release of fission products from the spent fuel resulting from the boiling of the pool water. The consequences of these accidents have been reviewed by the licensee and the staff.

With regard to cask drop accident, the most conservative case occurs with the cask being dropped into the SFP 1490 hours after the following fuel cycle history:

> One-third of a core is placed in the SFP each year during refueling for the next 20 years. Following the 21st year of operation, the entire core is removed from the reactor and placed into the pool, which fills the pool. The number of assemblies damaged is equal to a full-core offload plus the remainder of the pool filled with discharged assemblies from previous refuelings.

The 1490 hour figure is the earliest that a cask could be moved into the SFP area with a full pool based on the TS. It is assumed that all the spent fuel in the pool (8 full cores) is damaged with the release of 10% of the noble gases (except Kr-85) and the iodines and 30% of the Kr-85 to the pool water, and with 99% of the released iodine remaining in the pool water. The remainder of the released fission products is released to the environment. The resulting dose to an individual at the exclusion zone boundary would be 21 thyroid-rem and less than 0.1 rem to the whole body.

In their December 23, 1987 submittal, the licensee presented a conservative analysis of the radiological consequences of boiling of the SFP water. The staff has reviewed the licensee's analysis. The staff analysis differs only slightly (staff utilization of slightly more conservative dilution factors). The potential doses at the exclusion boundary (0.97 miles) and low population zone boundary (1.0 miles) are approximately 0.1 thyroid-rem and 10^{-5} rem to the whole body.

The potential doses resulting from the cask drop and spent fuel pool water boiling accidents are well below the allowable 10 CFR 100 guidelines doses of 300 rem to thyroid and 25 rem to the whole body. Therefore, the accident analysis aspect of the SFP rerack is acceptable.

9. RADIOACTIVE WASTE TREATMENT

The plant contains radioactive waste treatment systems designed to collect and process the gaseous, liquid, and solid waste that might contain radioactive material. The radioactive waste treatment systems are evaluated in the Final Environmental Statement (FES) dated June 1973 (US NRC 1973). There will be no change in the waste treatment systems described in the FES because of the proposed SFP rerack.

10. SIGNIFICANT HAZARDS CONSIDERATION COMMENTS

The licensee's request for amendment was noticed on August 31, 1987 (52 FR 32852), followed by a biweekly notice on September 23, 1987 (52 FR 35813). By letter dated September 30, 1987, Mr. Campbell Rich requested a public hearing. An Atomic Safety and Licensing Board was established on October 22, 1987 to consider the request. In pleadings filed November 4 and 9, 1987, both the licensee and the NRC staff pointed out that the letter failed to meet the requirements of 10 CFR 2.714 and that, therefore, the request should be denied. By Memorandum and Order of November 13, 1987, the Board directed the licensee and Mr. Rich to seek informal resolution of Mr. Rich's concerns and set January 15, 1988 as the deadline for filing an amended petition. Mr. Rich met with the licensee and subsequently filed an amended petition which proffered 16 contentions. The licensee and the staff responded to the contentions by

pleadings dated February 1, 1988 and February 4, 1988, respectively. The Licensing Board has not yet ruled on the contentions but has scheduled oral arguments on intervention and the contentions for March 29, 1988 (53 FR 5661). The proposed contentions and the staff comments are contained below.

- Contention 1: "That the expansion of the spent fuel pool at St. Lucie, Unit No. 1 is a significant hazards consideration and requires that a public hearing be held before issuance of the license amendments [sic]."

  The staff may issue and make immediately effective an amendment to an operating license pursuant to the Commission's regulations. A public hearing need not be held before issuance of the amendment. The staff has followed the Commission's regulations in the licensing action. A Final No Significant Hazards Consideration Determination is included in this safety evaluation.

- Contention 2: "Expansion of the spent fuel pool at the St. Lucie facility, Unit No. 1 constitutes a major Federal action and requires that the Commission prepare an environmental impact statement in accordance with the National Environmental Policy Act of 1969 (NEPA) and 10 CFR Part 51."

  The staff prepared an Environmental Assessment related to this licensing action. Based on the Assessment, the staff made a finding of no significant impact pursuant to 10 CFR 51.32 (53 FR 7065). Therefore, no environmental impact statement need be prepared.

- Contention 3: "That the calculation of radiological consequences resulting from a cask drop accident are [sic] not conservative, and the radiation releases in such an accident will no [sic] be ALARA, and will not meet with the 10 CFR Part 100 criteria."

  As Low As Is Reasonably Achievable (ALARA) applies to normal plant operations. ALARA is not a consideration in accident analysis consequences determination. The licensee addressed the cask drop accident in the licensing submittal. The staff reviewed the licensee's analysis (including input assumptions) and agrees with the licensee's conclusions. Section 8 of this evaluation contains the details of the staff's independent evaluation.

- Contention 4: "That the consequences of a cask drop accident or an accident similar in nature and effect are greatly increased due to the presence of a large crane to be built inside the spent fuel pool building in order to facilitate the reracking."

  The large crane that will be "built" in the fuel handling building is considered a temporary construction crane. The crane will be used to remove the existing racks and install the new racks. The crane will be in the fuel handling building for only a few months. Once the rerack modification is completed, the crane will be removed from the building. The spent fuel cask and the temporary construction crane will never be in the building at the same time. Thus, there is no possible accident as a result of the temporary construction crane and cask being in the building at the same time.

The contention also refers to "an accident similar in nature." This was also evaluated by the staff as follows. The staff evaluated the use of the temporary construction crane to be used during the rerack modification. The staff postulated various load drop accidents, such as the drop of a rack during the rerack modification, in spite of the fact that no heavy load will be carried over spent fuel or over any rack which contains spent fuel. The staff concluded that in all cases, the radiological consequences of the load drop accident are less than that for the cask drop accident evaluated. Section 5.3 of this evaluation contains the details of the staff's evaluation.

- Contention 5: "That FP&L has not provided a site specific radiological analysis of a spent fuel boiling event that proves that off-site dose limits and personal [sic] exposure limits will not be exceeded in allowing the pool to boil with makeup water from only seismic Category I sources."

  The licensee and the staff used the Standard Review Plan (SRP) as guidance in the spent fuel pool cooling analysis. The SRP specifies that the pool water temperature should not exceed 140°F (a single active failure to the system is assumed) under normal refueling conditions and not exceed boiling (a single active failure need not be considered) under full core discharge conditions. Independent calculations performed by the staff and licensee concluded that the SRP acceptance criteria are met. Nevertheless, the licensee and the staff, as a further precaution, postulated the site-specific pool boiling event and evaluated the radiological consequences and makeup water sources. The staff concluded that the radiological consequences were well within the guidelines of 10 CFR Part 100 and seismic Category I makeup water sources were available to supply makeup water to the pool. Section 5.2.1 contains the staff's evaluation of heat removal capability. Section 5.2.2 contains the staff's evaluation of makeup water sources. Section 8 contains the staff's evaluation of the radiological consequences as a result of pool boiling.

- Contention 6: "The Licensee and Staff have not adequately considered or analyzed materials deterioration or failure in materials integrity resulting from the increased generation of heat and radioactivity as as [sic] result of increased capacity and long-term storage in the spent fuel pool."

  The staff reviewed materials integrity of all materials used in the spent fuel pool. The corrosion of the high density racks due to the spent fuel pool environment should be of little significance during the life of the facility. The long-term durability of Boraflex is ensured by the proposed surveillance program. Section 3 of this document contains the staff evaluation to support these conclusions.

- Contention 7: "That there is no assurance that the health and safety of the workers will be protected during spent fuel pool expansion, and that the NRC estimates of between 80-130 rem/person will not meet ALARA requirements, in particular, those in 10 CFR Part 20."

  The staff evaluated the occupational radiation doses to workers involved with reracking the spent fuel pool. The staff concludes that the occupational radiation exposure is less than 15 person-rem, within

the applicable limits to 10 CFR Part 20, and is ALARA. Section 7 contains the staff's evaluation of doses to workers. In addition, Section 3.2 of the Environmental Assessment also addresses doses to workers.

- Contention 8: "That the high density design of the fuel storage racks will cause higher heat loads and increases in water temperature which could cause a loss-of-cooling accident and/or challenge the reliability and testability of the systems designed for decay heat and other residual heat removal, which could, in turn, cause a major release of radioactivity into the environment."

  The staff's comments are the same as those in response to Contention 5.

- Contention 9: "That the cooling system will be unable to accommodate the increased heat load in the pool resulting from the high-density storage system and a full core discharge in the event of a single failure of any of the pumps or the electrical power supply to the pumps on the shell side of the cooling system and/or in the case of a single failure of the electrical power supply to the pumps on the pool side of the spent pool cooling system. This inability will, therefore, create a greater potential for an accidental release of radioactivity into the environment."

  The staff's comments are the same as those in response to Contention 5.

- Contention 10: "That in calculating time to boil after loss of cooling after completion of full core discharge with the presence of the proposed 1706 assemblies, FP&L utilized a different set of assumptions than in determining the original figures for time to boil as indicated in the Final Safety Analysis Report for the St. Lucie plant, Unit No. 1. (9.1-49. Table 9.1-3)."

  The staff's comments are the same as those in response to Contention 5.

- Contention 11: "That the proposed use of high-density storage racks designed and fabricated by the Joseph Oats Corporation is utilization of an essentially new and unproven technology."

  The staff does not agree that the proposed use of high-density storage racks designed and fabricated by Joseph Oats Corporation is utilization of an essentially new and unproven technology. A large number of high-density storage racks, which utilize Boraflex, have been fabricated by J. Oats for other utilities. These racks have been installed and are currently storing spent fuel. Similar statements can be made of other fabricators of spent fuel storage racks. Section 3 of this evaluation contains the staff's rack materials evaluation.

- Contention 12: "That the presence of degraded Boraflex specimens or absorber sheets on the floor of the pool will pose an increased hazard in promoting the propagation of cladding fire to low power bundles and thus promote a far larger spent fuel pool accident."

  Boraflex specimens or absorber sheets will not be located on the floor of the pool. The Boraflex will be installed as part of the racks, within the rack structure. See Section 3.

- Contention 13: "The Licensee has not analyzed the effect that a hurricane or tornado could have on the spent fuel storage facility or its contents, and that the SER neglects certain accidents that could be caused by such natural disasters."

  The staff evaluated the fuel handling building structure under natural phenomena conditions when the unit was originally licensed. The staff's SER evaluation dated November 8, 1974, SER, Supplement 1 dated May 9, 1975, and SER, Supplement 2 dated March 1, 1976, served as the licensing basis to approve the St. Lucie 1 safety-related structures, including the fuel handling building, and considered natural phenomena.

  The rerack itself will not involve any changes to the fuel handling building/spent fuel pool; thus, natural phenomena need not be reanalyzed as part of this review.

- Contention 14: "That FP&L has not properly considered or evaluated the radiological consequences to the environment and surrounding, human population of an accident in the spent fuel pool."

  Section 8 of this document contains the staff's evaluation of postulated accidents. The consequences of the postulated accidents are within the guidelines of 10 CFR Part 100.

- Contention 15: "That the increase of the spent fuel pool capacity, which includes fuel rods which have experienced fuel failure and fuel rods that are more highly enriched, will cause the requirements of ANSI-N16-1975 not to be met and will increase the probability that a criticality accident will occur in the spent fuel pool and will exceed 10 CFR Part 50, A 62 criterion."

  The staff used the Standard Review Plan to evaluate the criticality aspects of the spent fuel pool rerack. The results showed that the rerack is acceptable from a criticality perspective. The staff's criticality evaluation is contained in Section 2 of this document.

- Contention 16: "That FP&L has not responded to the concerns as presented by the NRC by outlining a loading schedule for the spent fuel pool detailing how the most recently discharged spent fuel will be isolated from other recently discharged fuel and/or a full core discharge in order to mitigate potential risks from fires in the spent fuel pools [sic] resulting in releases of radioactivity into the environment in excess of the 10 CFR 100 criteria."

  The staff did not express a concern in regard to a loading and storage configuration for discharged fuel in connection with this rerack application. The licensee proposed limiting the spent fuel assemblies having minimum burnup per proposed Technical Specification Figure 5.6-1. The staff finds the proposed controls for placement of spent fuel assemblies in Region 1 and Region 2 acceptable, and concludes that no other loading and storage controls are necessary. See Section 2.0 of this document.

  In addition, the staff has generally addressed the potential for cladding fires in Section 5 of the Environmental Assessment.

11. FINAL NO SIGNIFICANT HAZARDS CONSIDERATION

The licensee's request for amendment to the operating license for the St. Lucie Plant, Unit No. 1, including a proposed determination by the staff of no significant hazards consideration, was individually noticed in the Federal Register on August 31, 1987, followed by a biweekly notice on September 23, 1987. This is the staff's final determination of no significant hazards consideration.

The Commission's regulations in 10 CFR 50.92 include three standards used by the NRC staff to arrive at a determination that a request for amendment involves no significant hazards considerations. These regulations state that the Commission may make such a final determination if operation of a facility in accordance with the proposed amendment would not (1) involve a significant increase in the probability or consequences of an accident previously evaluated; or (2) create the possibility of a new or different kind of accident from any accident previously evaluated; or (3) involve a significant reduction in a margin of safety.

The proposed spent fuel pool expansion amendment is similar to more than 100 earlier requests from other utilities for spent fuel pool expansions. The majority of these requests have already been granted by the NRC; others are under staff review. The knowledge and experience gained by the NRC staff in reviewing and evaluating these similar requests were utilized in this evaluation. The licensee's request does not use any new or unproven technology in either the analytical techniques necessary to support the expansion or in the construction process.

The staff has determined that the licensee's request for amendment to expand the spent fuel pool storage capacity for the St. Lucie Plant, Unit No. 1 by reracking to allow closer spacing of spent fuel assemblies does not significantly increase the probability or consequences of accidents previously evaluated; does not create new accidents not previously evaluated; and does not result in any significant reduction in the margins of safety with respect to criticality, cooling or structural considerations.

The following staff evaluation in relation to the three standards demonstrates that the proposed amendment for the SFP expansion does not involve a significant hazards consideration.

First Standard

"Involve a significant increase in the probability or consequences of an accident previously evaluated."

The following postulated accidents and events involving spent fuel storage have been identified and evaluated by the licensee. The staff likewise evaluated the same accidents and events.

1. A spent fuel assembly drop in the spent fuel pool.

2. Loss of spent fuel pool cooling system flow.

3. A seismic event.

4. A spent fuel cask drop.

5. A construction accident.

The probability of any of the first four accidents is not affected by the racks themselves; thus the modification cannot increase the probability of these accidents. As for the construction accident, the licensee will not carry any rack directly over the stored spent fuel assemblies. All work in the spent fuel pool area will be controlled and performed in strict accordance with specific written procedures. The crane that will be used to bring the racks into the Fuel Handling Building has been evaluated and found acceptable. In addition, the temporary construction crane, which will be used to move racks within the spent fuel pool area, has been evaluated and found acceptable. Section 5.0 of this safety evaluation contains the details of the staff's analysis. Thus, the probability of a construction accident is not significantly increased as a result of reracking. Accordingly, the proposed modification does not involve a significant increase in the probability of an accident previously evaluated.

As noted in Section 2.0 of this safety evaluation, the consequences of a spent fuel assembly drop in the spent fuel pool (scenario 1) was evaluated and it was found that the criticality acceptance criterion, k_{eff} less than or equal to 0.95, is not violated. In addition, the radiological consequences of a fuel assembly drop are not changed from the previous analysis. The staff also conducted an evaluation of the potential consequences of a fuel handling accident. The staff analysis found that the calculated doses are less than 10 CFR Part 100 guidelines. The results of the analysis show that a dropped spent fuel assembly on the racks will not distort the racks such that they would not perform their safety function. Section 8.0 contains the details of the staff's accident analysis. Thus, the consequences of this type accident are not changed from the previously evaluated spent fuel assembly drops which have been found acceptable.

The consequences of a loss of spent fuel pool cooling system flow (scenario 2) have been evaluated and it was found that sufficient time is available to provide an alternate means for cooling (i.e., the fire hose stations) in the event of a failure in the cooling system (see Section 5.0 of this safety evaluation). Thus, the consequences of this type of accident are not significantly increased from previously evaluated loss of cooling system flow accidents.

The consequences of a seismic event (scenario 3) have been evaluated and are acceptable. The new racks will be designed and fabricated to meet the requirements of applicable portions of the NRC Regulatory Guides and published standards. The new free-standing racks are designed, as are the existing free-standing racks, so that the floor loading from racks completely filled with spent fuel assemblies, partially filled, or empty at the time of the incident, does not exceed the structural capability of the spent fuel pool. The Fuel Handling Building and spent fuel pool structure have been evaluated for the increased loading from the spent fuel racks in accordance with the criteria previously evaluated by the staff and found acceptable. Section 5.0 contains the details of the staff's analysis. Thus, the consequences of a seismic event are not significantly increased from previously evaluated events.

The consequences of a spent fuel cask drop (scenario 4) have been evaluated (see Section 8.0 of this safety evaluation). The radiological consequences of the cask drop are well within the guidelines of 10 CFR 100 and the doses are not increased as compared to the doses analyzed for the presently installed racks. The cask drop analysis is based on administrative and Technical Specifications controls which ensure that minimum requirements for decay of irradiated fuel assemblies in the entire spent fuel pool are met prior to movement of the cask into the cask area of the spent fuel pool. Analyses also demonstrate that k_{eff} will always be less than the NRC acceptance criterion. In addition, leakage from a cask drop will not exceed the makeup capabilities of the spent fuel pool. Thus, the consequences of a cask drop accident will not increase from previously evaluated accident analyses.

The consequences of a construction accident (scenario 5) are enveloped by the spent fuel cask drop analysis. No rack (old or new) weighs more than a single 25 ton cask. In addition, all movements of heavy loads handled during the rerack operation will comply with the NRC guidelines presented in NUREG-0612, "Control of Heavy Loads at Nuclear Power Plants." The consequences of a construction accident are not increased from previously evaluated accident analyses.

Therefore, it is concluded that the proposed amendment to replace the spent fuel racks in the spent fuel pool will not involve a significant increase in the probability or consequences of an accident previously evaluated.

Second Standard

"Create the possibility of a new or different kind of accident from any accident previously evaluated."

As noted in various sections of this safety evaluation and the consultant's Technical Evaluation Report description of acceptance criteria (Section 2.0), the staff evaluated the proposed modification in accordance with the guidance of the NRC position paper entitled, "OT Position for Review and Acceptance of Spent Fuel Storage and Handling Applications," appropriate NRC Regulatory Guides, appropriate NRC Standard Review Plans, and appropriate industry codes and standards. In addition, the staff has reviewed several previous NRC Safety Evaluations for rerack applications similar to this proposal. No unproven techniques and methodologies were utilized in the analysis and design of the proposed high density racks. No unproven technology will be utilized in the fabrication and installation process of the new racks. The basic reracking technology in this case has been developed and demonstrated in numerous applications for a fuel pool capacity increase which have already received NRC staff approval.

Third Standard

"Involve a significant reduction in a margin of safety."

The staff Safety Evaluation review process has established that the issue of margin of safety, when applied to a reracking modification, should address the following areas:

1. Nuclear criticality considerations
2. Thermal-hydraulic considerations
3. Mechanical, material and structural considerations.

The established acceptance criterion for criticality is that the neutron multiplication factor in spent fuel pools shall be less than or equal to 0.95, including all uncertainties, under all conditions. This margin of safety has been adhered to in the criticality analysis methods for the new rack design.

The methods used in the criticality analysis conform with the applicable portions of the appropriate staff guidance and industry codes, standards, and specifications. In meeting the acceptance criteria for criticality in the spent fuel pool, such that k_{eff} is always less than 0.95, including uncertainties at a 95%/95% probability/confidence level, the proposed amendment to rerack the spent fuel pool does not involve a significant reduction in a margin of safety for nuclear criticality. Section 2.0 contains the details of the staff's analysis.

Conservative methods were used to calculate the maximum fuel temperature and the increase in temperature of the water in the spent fuel pool. The thermal-hydraulic evaluation used the methods used for evaluations of the present spent fuel racks in demonstrating the temperature margins of safety are maintained. The proposed modification will increase the heat load in the spent fuel pool. The evaluation shows that the spent fuel will be adequately cooled. Section 5.0 contains the details of the staff's analysis. Thus, there is no significant reduction in the margin of safety for thermal-hydraulic or spent fuel cooling concerns.

The main safety function of the spent fuel pool and the racks is to maintain the spent fuel assemblies in a safe configuration through all normal or abnormal loadings, such as an earthquake, impact due to a spent fuel cask drop, drop of a spent fuel assembly, or drop of any other heavy object. The mechanical, material, and structural design of the new spent fuel racks is in accordance with applicable portions of the "NRC Position for Review and Acceptance of Spent Fuel Storage and Handling Applications," dated April 14, 1978, as modified January 18, 1979; Standard Review Plan 3.8.4; and other applicable NRC guidance and industry codes. The rack materials used are compatible with the spent fuel pool and the spent fuel assemblies (see Section 3.0 of this safety evaluation). The structural considerations of the new racks address margins of safety against tilting and deflection or movement, such that the racks are not damaged during impact (see Section 4.0 of this safety evaluation). In addition, the spent fuel assemblies remain intact and no criticality concerns exist. Thus, the margins of safety are not significantly reduced by the proposed rerack.

Summary

Based on the foregoing and the fact that the reracking technology in this instance has been well-developed and demonstrated, the Commission has concluded that the standards of 10 CFR 50.92 are satisfied. Therefore, the Commission has made a final determination that the proposed amendment for spent fuel pool expansion does not involve a significant hazards consideration.

12. ENVIRONMENTAL CONSIDERATIONS

A separate Environmental Assessment has been prepared pursuant to 10 CFR Part 51. The Notice of Issuance of Environmental Assessment and Finding of No Significant Impact was published in the Federal Register on March 4, 1988 (53 FR 7065).

13. CONCLUSIONS

The staff has reviewed and evaluated the licensee's request for amendment for the St. Lucie Plant, Unit 1 regarding the expansion of the spent fuel pool. Based on the considerations discussed in this safety evaluation, the staff concludes that:

(1) this amendment will not (a) significantly increase the probability or consequences of accidents previously evaluated, (b) create the possibility of a new or different accident from any accident previously evaluated, (c) significantly reduce a margin of safety; and therefore, the amendment does not involve significant hazards considerations;

(2) there is reasonable assurance that the health and safety of the public will not be endangered by operation in the proposed manner, and

(3) such activities will be conducted in compliance with the Commission's regulations and the issuance of this amendment will not be inimical to the common defense and security or to the health and safety of the public.

14. REFERENCES - FP&L

1. FP&L letter No. L-87-245, June 12, 1987 from C. O. Woody (FP&L) to US NRC, Subject: Proposed License Amendment, Spent Fuel Pool Rerack.

2. FP&L letter No. L-87-374, September 8, 1987 from C. O. Woody (FP&L) to US NRC, Subject: Spent Fuel Rerack.

3. FP&L letter No. L-87-422, October 20, 1987 from C. O. Woody (FP&L) to US NRC, Subject: Spent Fuel Pool Rerack-Design and Analysis.

4. FP&L letter No. L-87-424, October 20, 1987, from C. O. Woody (FP&L) to US NRC, Subject: Spent Fuel Pool Rerack - Boraflex and Pool Cleanup.

5. FP&L letter No. L-87-425, October 20, 1987, from C. O. Woody (FP&L) to US NRC, Subject: Spent Fuel Pool Rerack - Radioactive Sources, Dose Rate, and Dose Assessment.

6. FP&L letter No. L-87-519, December 21, 1987, from C. O. Woody (FP&L) to US NRC, Subject: Environmental Effects of Transportation of Fuel and Waste.

7. FP&L letter No. L-87-538, December 22, 1987, from C. O. Woody (FP&L) to US NRC, Subject: Spent Fuel Pool Rerack.

8. FP&L letter No. L-87-535, December 23, 1987, from C. O. Woody, (FP&L) to US NRC, Subject: Spent Fuel Pool Rerack - Design and Analysis.

9. FP&L letter No. L-87-536, December 23, 1987, from C. O. Woody, (FP&L) to US NRC, Subject: Spent Fuel Pool Rerack - Design and Analysis.

10. FP&L letter No. L-87-537, December 23, 1987, from C. O. Woody, (FP&L) to US NRC, Subject: Spent Fuel Rerack.

11. FP&L letter No. L-88-38, January 29, 1988, from C. O. Woody, (FP&L) to US NRC, Subject: Spent Fuel Rerack.

REFERENCES - NRC

12. U.S. Nuclear Regulatory Commission, letter dated July 16, 1987 from E. G. Tourigny (NRC) to C. O. Woody, (FP&L), Subject: Request for Additional Information.

13. U.S. Nuclear Regulatory Commission, letter dated August 20, 1987 from E. G. Tourigny (NRC) to C. O. Woody, (FP&L), Subject: Request for Additional Information.

14. U.S. Nuclear Regulatory Commission, letter dated August 25, 1987, from H. N. Berkow (NRC) to C. O. Woody (FP&L), Subject: Spent Fuel Pool Expansion. Also: Federal Register Notice, 52 FR 32852, August 31, 1987.

15. U.S. Nuclear Regulatory Commission, letter dated September 1, 1987, from E. G. Tourigny (NRC) to C. O. Woody (FP&L), Subject: Request for Additional Information.

16. U.S. Nuclear Regulatory Commission, meeting minutes dated September 11, 1987 from E. G. Tourigny (NRC), Subject: Summary of September 2, 1987 Meeting with FP&L and NRC Staff Regarding the Reracking of the Spent Fuel Pool.

17. U.S. Nuclear Regulatory Commission, letter dated September 21, 1987, from E. G. Tourigny (NRC) to C. O. Woody (FP&L), Subject: Request for Additional Information.

18. U.S. Nuclear Regulatory Commission, meeting minutes dated October 21, 1987 from E. G. Tourigny (NRC), Subject: Summary of October 2, 1987 Meeting with FP&L and NRC Staff Regarding the Reracking of the Spent Fuel Pool.

19. U.S. Nuclear Regulatory Commission, letter dated October 23, 1987 from E. G. Tourigny (NRC) to C. O. Woody (FP&L), Subject: Request for Additional Information.

20. U.S. Nuclear Regulatory Commission, letter dated November 25, 1987 from E. G. Tourigny (NRC) to C. O. Woody (FP&L), Subject: Request for Additional Information.

21. U.S. Nuclear Regulatory Commission, meeting minutes dated December 4, 1987 from E. G. Tourigny (NRC), Subject: Summary of October 29 and 30, 1987 Audit of J. Oats and HOLTEC in Support of Reracking of the Unit 1 Spent Fuel Pool.

22. U.S. Nuclear Regulatory Commission, meeting minutes dated December 9, 1987 from E. G. Tourigny (NRC), Subject: Summary of November 24, 1987 Meeting between FP&L and NRC Staff Regarding the Reracking of the Spent Fuel Pool.

23. U.S. Nuclear Regulatory Commission, letter dated February 29, 1988 from E. G. Tourigny (NRC) to C. O. Woody (FP&L), Subject: Environmental Assessment and Finding of No Significant Impact - Spent Fuel Pool Expansion, St. Lucie Plant, Unit No. 1. Also: Federal Register Notice, 53 FR 7065, March 4, 1988.

REFERENCES - OTHER

24. Campbell Rich to U.S. Nuclear Regulatory Commission, Secretary to the Commission, letter dated September 30, 1987.

25. Campbell Rich to U.S. Nuclear Regulatory Commission, undated letter, enveloped postmarked January 15, 1988.

Dated: March 11, 1988

Attachment:

Appendix A

7590-01

UNITED STATES NUCLEAR REGULATORY COMMISSION

FLORIDA POWER AND LIGHT COMPANY

DOCKET NO. 50-335

NOTICE OF ISSUANCE OF AMENDMENT TO FACILITY

OPERATING LICENSE

AND FINAL DETERMINATION OF NO SIGNIFICANT

HAZARDS CONSIDERATION

The U. S. Nuclear Regulatory Commission (the Commission) has issued Amendment No. 91 to Facility Operating License No. DRP-67, issued to the Florida Power and Light Company, (the licensee), which revised the Technical Specifications for operation of the St. Lucie Plant, Unit No. 1, located in St. Lucie County, Florida. The amendment was effective as of the date of its issuance.

The amendment allows the expansion of the spent fuel pool storage capacity from the current 728 fuel assemblies to the proposed 1706 fuel assemblies. The expansion is to be achieved by removing the existing racks and installing new, higher density ones.

The application for the amendment complies with the standards and requirements of the Atomic Energy Act of 1954, as amended (the Act), and the Commission's rules and regulations. The Commission has made appropriate findings as required by the Act and the Commission's rules and regulations in 10 CFR Chapter 1, which are set forth in the license amendment.

Notice of Consideration of Issuance of Amendment and Proposed No Significant Hazards Consideration Determination and Opportunity for Hearing in connection with this action was published in the FEDERAL REGISTER on August 31, 1987 (52 FR 32852). A request for a hearing was filed on September 30, 1987 by Mr. Campbell Rich.

Under its regulations, the Commission may issue and make an amendment immediately effective, notwithstanding the pendency before it of a request for a hearing from any person, in advance of the holding and completion of any required hearing, where it has determined that no significant hazards considerations are involved.

The Commission has applied the standards of 10 CFR 50.92 and has made a final determination that the amendment involves no significant hazards considerations. The basis for this determination is contained in the Safety Evaluation related to this action. Accordingly, as described above, the amendment has been issued and made immediately effective and any hearing will be held after issuance.

The Commission has prepared an Environmental Assessment (March 4, 1988, 53 FR 7065) related to the action and has concluded that an environmental impact statement is not warranted because there will be no environmental impact attributable to the action beyond that which has been predicted and described in the Commission's Final Environmental Statement for St. Lucie Unit 1 dated June 1973.

For further details with respect to the action, see (1) the application for amendment dated June 12, 1987, as supplemented by letters dated September 8, 1987, October 20, 1987 (three letters), December 21, 1987, December 22, 1987,

December 23, 1987 (three letters), and January 29, 1988, (2) Amendment No. 91 to Facility Operating License No. DPR-67, (3) the Commission's related Safety Evaluation, and (4) the Commission's related Environmental Assessment. All of these items are available for public inspection at the Commission's Public Document Room, 1717 H Street, N.W., Washington, D.C., and at the Indian River Junior College Library, 3208 Virginia Avenue, Fort Pierce, Florida 33450. A copy of items (2), (3), and (4) may be obtained upon request addressed to the U.S. Nuclear Regulatory Commission, Washington, D.C. 20555, Attention: Director, Division of Reactor Projects I/II.

Dated at Rockville, Maryland this 11th day of March, 1988.

FOR THE NUCLEAR REGULATORY COMMISSION

E. G. Tourigny, Project Manager
Project Directorate II-2
Division of Reactor Projects-I/II
Office of Nuclear Reactor Regulation

APPENDIX A

TECHNICAL EVALUATION REPORT

EVALUATION OF THE HIGH DENSITY SPENT FUEL RACK STRUCTURAL ANALYSIS FOR FLORIDA POWER AND LIGHT COMPANY ST. LUCIE PLANT - UNIT NO. 1

By

G. DeGrassi

STRUCTURAL ANALYSIS DIVISION

DEPARTMENT OF NUCLEAR ENERGY

BROOKHAVEN NATIONAL LABORATORY

UPTON, NEW YORK

February 1988

Prepared for U.S. Nucelar Regulatory Commission

Office of Nuclear Reactor Regulation

Fin A-3841

Executive Summary

This report describes and presents the results of the BNL technical evaluation of the structural analysis submitted by Florida Power and Light Company in support of their licensing submittal on the use of high density fuel racks at St. Lucie Unit No. 1. The review was conducted to ensure that the racks meet all structural requirements as defined in the NRC Standard Review Plan and the NRC OT Position for Review and Acceptance of Spent Fuel Pool Storage and Handling applications.

The proposed reracking of the spent fuel pool involves the installation of seventeen free-standing, self-supporting modules of varying sizes arranged within close proximity to each other and the pool walls. Each rack module consists of individual cells of square cross-section, each designed to accommodate one fuel assembly. Since the racks are neither anchored to the pool floor or walls nor connected to each other, during an earthquake, the racks would be free to slide and tilt. For an earthquake of sufficient intensity, the racks could impact each other and the pool walls. Because of the nonlinear nature of this design, a time history analysis was required to characterize the seismic response of the fuel racks.

The BNL review focused primarily on the seismic analysis of the fuel rack modules because of the complexity of the analysis method and the number of simplifying assumptions that were required in developing the dynamic models. BNL also reviewed other analyses performed by the Licensee including fuel handling accident analyses, thermal analyses, and spent fuel pool and liner analyses.

During the course of the review, a number of questions were raised regarding the adequacy of the fuel rack dynamic models. Concerns were raised that single rack models may underpredict seismic forces and displacements that would occur in the real multiple rack fuel pool environment (Section 4.1.1). Concerns were also raised regarding the adequacy of fluid coupling assumptions used in the models (Section 4.1.2). In response to these questions, the Licensee provided additional information and performed additional studies, including multiple fuel rack seismic analyses, to demonstrate the adequacy of the design basis results. The additional studies indicated that the design basis models predict conservative seismic loads and displacements. It was noted, however, that the most significant factor contributing to the conservatism was the use of twice the fuel assembly weight in the design basis models. Nevertheless, the results of these studies coupled with the significant safety factors in the results provided a high level of confidence to conclude that there is sufficient conservatism in the results to compensate for analytical uncertainties.

Based on the BNL review of the Licensee's analyses, it was concluded that the proposed St. Lucie Unit 1 high density fuel racks and spent fuel pool are designed with sufficient capacity to withstand the effects of the required environmental and abnormal loads.

TABLE OF CONTENTS

LIST OF TABLES

LIST OF FIGURES

1.0 INTRODUCTION

1.1 Purpose

This technical evaluation report (TER) describes and presents the results of the BNL review of Florida Power and Light Company's licensing submittal on the use of high density fuel racks at St. Lucie Unit No. 1 with respect to their structural adequacy.

1.2 Background

The existing racks in the spent fuel pool have 728 total storage cells. With the presently available storage cells, St. Lucie, Unit No. 1 lost the full-core reserve storage capacity after the seventh refueling which was completed in the spring of 1987. To correct this situation and provide sufficient capacity to store discharged fuel assemblies, the Licensee has requested NRC to issue a License Amendment to replace the existing storage racks with new high density spent fuel storage racks. The new racks will allow for more dense storage of spent fuel, thus enabling the existing pool to store more fuel. The new high density racks have a usable storage capacity of 1706 cells, extending the full-core reserve storage capability until the year 2009.

The proposed racks consist of individual cells of square cross-section, each of which accomodates a single PWR fuel assembly. The cells are assembled into distinct modules of varying sizes which are to be arranged within the existing spent fuel pool. Each module is free-standing and self-supporting.

The Licensee provided a summary of his safety analysis and evaluation of the proposed racks in a Safety Analysis Report (Ref. 1). The report described the structural analysis of the new fuel racks and the existing fuel pool. It also gave a description of postulated dropped fuel and jammed fuel accident analyses.

BNL reviewed the Safety Analysis Report and generated a list of additional information needed to complete the review (Ref. 2). The Licensee provided the additional information in later submittals (Ref. 3a, b, c). In addition, BNL participated in a limited audit of the fuel rack analysis and fabrication in the offices of Holtec International, the fuel rack designer, and at Joseph Oat Corporation, the fuel rack fabricator.

1.3 Scope of Review

The objective of the BNL technical review was to evaluate the adequacy of the Licensee's structural analysis and design of the proposed high density spent fuel racks and spent fuel pool. Due to the complex nature of the fuel rack seismic analysis, the primary focus of the review was on the adequacy of the non-linear fuel rack models and their dynamic analysis. The structural evaluation of fuel racks subjected to the dropped fuel and jammed fuel

handling accidents described in the Licensee's report (Ref. 1) were included in this review. However, the definition of these postulated accidents and their parameters (drop height, uplift force, etc.) were beyond the scope of this review. A limited review of the spent fuel pool was conducted to insure that appropriate loads, methodology and acceptance criteria were applied.

2.0 ACCEPTANCE CRITERIA

The acceptance criteria for the evaluation of the spent fuel rack applications are provided in the NRC OT Position for Review and Acceptance of Spent Fuel Storage and Handling Applications (Ref. 4). Structural requirements and criteria given in this position paper were updated and included as Appendix D to Standard Review Plan 3.8.4, "Technical Position on Spent Fuel Pool Racks," (Ref. 5). These documents state that the main safety function of the spent fuel pool and fuel racks is to maintain the spent fuel assemblies in a safe configuration through all environmental and abnormal loadings, such as earthquakes, and impact due to spent fuel cask drop, drop of a spent fuel assembly, or drop of any other heavy object during routine spent fuel handling.

Section 2 of SRP 3.8.4, Appendix D gives the applicable Codes, Standards and Specifications. Construction materials should conform to Section III, Subsection NF of the ASME Codes. Design, fabrication and installation of stainless steel spent fuel racks may be performed based upon the ASME Code Subsection NF requirements for Class 3 component supports.

Requirements for seismic and impact loads are discussed in Section 3 of Appendix D. It states that seismic excitation along three orthogonal directions should be imposed simultaneously for the design of the new rack system. Submergence in water may be taken into account. The effects of submergence are considered on a case-by-case basis. Impact Loads generated by the closing of fuel assembly to fuel rack gaps during a seismic excitation should be considered for local as well as overall effects. It should also be demonstrated that the consequent loads on the fuel assemblies do not lead to fuel damage. Loads generated from other postulated events may be acceptable if sufficient analytical parameters are provided for review.

Load and load combination requirements are provided in Section 4. Specific loads and load combinations are acceptable if they are in conformance with Section 3.8.4-II.3 and Table 1, Appendix D of the Standard Review Plan. Changes in temperature distribution should be considered in the design of the pool structure. Temperature gradients across the rack structure due to differential heating effect between a full and an empty cell should be incorporated in the rack design. Maximum uplift forces from the crane should be considered in the design.

Section 5 discusses design and analysis procedures. It states that design and analysis procedures in accordance with Section 3.8.4-II.4 of the Standard Review Plan are acceptable. The effects of gaps, sloshing water, and increase of effective mass and damping due to submergence in water should be quantified. Details of the mathematical model including a description of how

the important parameters are obtained should be provided.

Structural acceptance criteria are provided in Section 6. The acceptance criteria are given in Table 1 of Appendix D. For impact loading, the ductility ratios utilized to absorb kinetic energy should be quantified. When considering seismic loads, factors of safety against gross sliding and overturning of the racks shall be in accordance with Section 3.8.5-II.5 of the Standard Review Plan unless it can be shown that either (a) sliding motions are minimal, impacts between adjacent racks and between racks and walls are prevented and the factors of safety against tilting are met, or (b) sliding and tilting motions will be contained within geometric constraints and any impact due to the clearances is incorporated.

3.0 FUEL RACK DESCRIPTION

The new high density spent fuel storage racks consist of individual cells with 8.65 inch by 8.65 inch nominal square cross-section, each of which accommodates a single Combustion Engineering or Exxon PWR fuel assembly or equivalent, from either St. Lucie Unit 1 or Unit 2. A total of 1706 cells are arranged in 17 distinct modules of varying sizes in two regions. Region 1 is designed for storage of new fuel assemblies with enrichments up to 4.5 weight percent U-235 or for fuel assemblies with the same maximum enrichment which have not achieved adequate burnup for Region 2. The Region 2 cells are capable of accomodating fuel assemblies with various initial enrichments which have accumulated minimum burnups within an acceptable bound as discussed in the Licensee's Safety Analysis Report (Ref. 1). The arrangement of the rack modules in the spent fuel pool is shown in Figure 1. Typical Region 1 and Region 2 racks are shown in Figure 2 and 3. Each rack module is equipped with girdle bars at the upper end, 3/4-inch thick by 3 1/2 inches high. The modules make surface contact between their contiguous walls at the girdle bar locations and thus maintain a nominal 1 1/2 inch gap between adjacent module cell walls. The modules in the two regions are of eight different types. Tables 1 and 2 summarize the physical data for each module type.

The rack modules are fabricated from ASME SA-240-304L austenitic stainless steel sheet and plate material, and SA-351-CF3 casting material and SA-564-630 precipitation hardened stainless steel for supports. The weld filler material utilized in body welds is ASME SFA-5.9, Classification ER 308L. Boraflex serves as the neutron absorber material. Boraflex is a silicone-based polymer containing fine particles or boron carbide in a homogeneous, stable matrix.

Each rack module consists of the following components:

- Internal square tube
- Neutron absorber material (Boraflex)
- Poison sheathing (Region 1 only)
- Gap element (Region 1 only)
- Baseplate

- Support assembly
- Top lead-in (Region 1 only)

Figures 4 and 5 show a typical Region 1 cell elevation and a typical 3x3 array horizontal cross-section. Figures 6 and 7 show the same views of a typical Region 2 rack module. The figures show that the major difference between the Region 1 and Region 2 module designs is the larger pitch between cells in Region 1. Channel shaped gap elements are welded between the Region 1 cell tubes to maintain the minimum flux trap required between adjacent internal cells. Region 1 modules use poison sheathing (cover sheets) to position and retain the Boraflex absorber material around each cell wall. In Region 2 modules, the Boraflex absorber material is placed between the walls of interior cells and kept in place by stainless steel connecting strips. The Region 1 modules also provide lead-ins at the top of each cell wall to facilitate fuel assembly insertion.

The adjacent cells of each module are welded together either through gap elements (Region 1) or side connecting strips (Region 2) to form a honeycomb structure. The honeycomb is welded to a 3/4 inch thick baseplate with 3/32 inch fillet welds. The baseplate has 6-inch diameter holes concentrically located with respect to each square tube, except at support leg locations, where the hole size is 5 inches in diameter. These holes provide the primary path for coolant flow.

Each module has at least four support legs. All supports are adjustable in length to enable leveling of the rack. The variable height support assembly consists of a flat-footed spindle which rides into an internally-threaded cylindrical member. The cylindrical member is attached to the underside of the baseplate through fillet and partial penetration welds. Figure 8 shows a vertical cross-section of the adjustable support assembly.

The support legs will rest on 1-1/4 inch thick plates on the spent fuel pool floor. Additional plates will be provided for those areas of the pool floor where the rack support legs are located which do not already have plates. The new plates will not be attached to the pool floor. Aside from the addition of these plates, the Licensee has indicated that no other spent fuel pool modifications are needed to accomodate the new racks.

4.0 TECHNICAL EVALUATION

4.1 Fuel Rack Seismic Analysis

The spent fuel storage racks are seismic Category I equipment required to remain functional during and after a safe shutdown earthquake. As described in Section 3.0, the proposed racks consist of 17 distinct free-standing modules which are neither anchored to the pool floor, attached to the side walls, nor connected to each other. Any rack may be completely loaded with fuel assemblies, partially loaded, or completely empty. The fuel assemblies are free to rattle within their storage cells.

Seismic forces are transmitted to the racks through friction at the support leg to pool floor interface. If seismic displacements are large enough, the racks can impact against each other or the pool walls and the support legs can lift off and impact the pool floor. Because of these nonlinearities, a time history analysis of nonlinear rack models was required to characterize the seismic response of the fuel racks. BNL's review of the details of the modeling technique and analysis method is described in the following sections.

4.1.1 Dynamic Model

The Licensee's mathematical model of a spent fuel racks module is shown in Figures 9, 10, 11, and 12. The Licensee indicated that the rack structure is very rigid and that its motion can be characterized in terms of six degrees of freedom at the rack base. Figure 9 shows the rack as a rigid stick on a rigid base with three translational (q_1, q_2, q_3) and three rotational (q_4, q_5, q_6) degrees of freedom. The fuel assemblies are treated as five lumped masses located at different elevations (nodes 1* to 5*). All fuel assemblies in a rack module are assumed to vibrate in phase. Each lumped mass is assumed to rattle independently within the rack cell gaps and is represented by two horizontal translational degrees of freedom. Impacts between the rack and fuel assembly lumped masses are accounted for by the use of compression-only gap elements as shown in Figure 11. The support legs are modeled as compression-only springs (S1 to S4 in Figure 9) which consider the local vertical flexibility of the rack-support interface. Friction elements are used at the bottom of the support legs. Figure 10 shows the impact springs acting through gap elements to simulate the interface with adjacent rack modules or pool walls. Five impact springs per side are used at both the girdle bar and baseplate elevations. Figure 12 shows a two dimensional representation of the model with only one "rattling" fuel mass to clarify the overall model concept.

Fluid coupling between rack and fuel asemblies, and between rack and adjacent racks or walls is simulated by including inertial coupling terms in the equations of motion. This is discussed in detail below. Fluid damping between rack and fuel assemblies, and between rack and adjacent racks is neglected in the model.

In order to simulate the motion of adjacent fuel racks, the model assumes a symmetry plane midway between adjacent racks. Thus the model assumes that each adjacent rack moves completely out of phase with the rack being analyzed. This assumption is intended to predict conservative rack to rack impact forces.

To complete the review of the adequacy of the model, the Licensee was requested to provide typical fuel rack and fuel assembly design drawings and a list of key modeling parameters. The Licensee provided typical drawings (Ref. 6-9) and a list of model parameters shown in Table 3. Impact spring values were based on local stiffness of the rack at the support foot to pool

liner interface and at the fuel assembly to rack cell interface. Rack to rack impact spring values were set at 1 x 10^6 lb/in. This value is reasonable for base plate locations but significantly larger than would be expected at the girdle bar locations. However, the use of a high spring constant at this location should be conservative and overestimate peak impact loads at the girdle bars.

The Licensee indicated that the new racks will rest on 1-1/4 inch base plates on the pool floor. The plate material is 304 stainless steel which is the same material as the pool liner. Most of the baseplates were added to the pool at the time at the last rerack. Additional baseplates will be added to accomodate the support configuration of the new racks. The existing plates were welded to the pool liner. The new plates will not be attached to the pool floor. The baseplates were not included in the rack model but were assumed to move in the same manner as the rack floor. The Licensee indicated that this assumption is reasonable because the friction coefficient between the baseplates and liner should be greater then the friction coefficient between the baseplate and rack support feet because of the differences in materials. A review of the drawings indicates that the baseplates are large enough to accomodate a reasonable amount of slippage of the fuel racks during an earthquake. Overall, the use of baseplates is a desirable design feature since they will serve to distribute fuel rack loads over a large area and will protect the pool liner from local punching or tearing at the rack leg interfaces.

The weight of the fuel included in the model was based on 2500 pounds per fuel assembly which is about twice the design weight. The Licensee used the higher weight to account for possible use of consolidated fuel in the future. For this application, the Licensee stated that the higher weight should provide conservative results. The results of additional analytical studies were provided to support this position as discussed in Section 4.2.1. Since the Licensee's proposed Licensee amendment did not involve the use of consolidated fuel, the higher weight was considered a conservative modeling assumption in this review. If the Licensee intends to use consolidated fuel at a later date, further evaluation would be required to reassess the safety margins and to consider other factors which may affect the seismic design.

The Licensee was asked to provide justification for treating the fuel assemblies as five independent rattling masses. The Licensee stated that the fuel assemblies have a natural frequency much lower than the rack and submitted additional studies to demonstrate that the effects of coupling the masses are not significant when compared to the overall conservatism of the model. This is discussed in Section 4.2.1. The fuel was modeled as five lumped masses at equally spaced elevations above the baseplate. In reality, fuel-rack impacts would be expected to occur at the nine spacer grid locations and at the upper and lower end fittings. The selection of only five impact locations combined with the assumption that all fuel assemblies move in-phase should result in conservative fuel-to-rack impact loads.

The Licensee was asked to provide justification for the assumption that the motion of the rack can be represented by a rigid six degree of freedom structure. The Licensee indicated that for a typical rack, the lowest natural frequency of the rack gridwork vibrating in water is 32 Hz. For seismic analysis, it is appropriate to consider this as a rigid body whose motion can be described by a six degree of freedom model.

The adequacy of analyzing only a single rack model in the seismic analysis was questioned. The seismic motion of a single rack is coupled to the motion of adjacent racks through impact forces and fluid coupling forces. The single rack model constrains the motion of a rack within an imaginary boundary. Maximum displacements cannot exceed one-half the gap to the adjacent racks. For sufficiently strong seismic motion, sliding and tilting motions of the racks could be larger than those predicted by a constrained single rack model resulting in higher impact velocities than would be predicted by a single rack model. Under worst conditions, rows of racks could slide together in one direction and pile up against a pool wall. The additional mass of racks involved in the impact could generate larger loads on the racks and the pool walls. This concern may be more critical for the pool walls, since they are not designed to accomodate seismic impact loads from the fuel racks. In response to these concerns, the Licensee committed to perform a two dimensional multiple rack analysis of a single row of fuel racks to determine the extent of rack displacement under an SSE. The results and evaluation of the multiple rack analysis is discussed in Section 4.2.2.

4.1.2 Fluid Coupling Effects

The effect of submergence of the fuel racks in a pool of water has a significant effect on their seismic response. The dynamic rack model incorporated inertial coupling (fluid coupling) terms in the equations of motion to account for this effect. For two bodies (mass m_1 and m_2) adjacent to each other in a frictionless fluid medium, Newtons equations of motion have the form:

$$(m_1 + M_{11})\ddot{X}_1 - M_{12}\ddot{X}_2 = \text{applied forces on mass } m_1$$

$$-M_{21}\ddot{X}_1 + (m_2 + M_{22})\ddot{X}_2 = \text{applied forces on mass } m_2$$

$\ddot{X}_1$, $\ddot{X}_2$ denote absolute accelerations of mass m_1 and m_2 respectively. M_{11}, M_{12}, M_{21} and M_{22} are fluid coupling coefficients which depend on the shape of the bodies and their relative disposition. The basic theory is summarized in a paper by Fritz (Ref. 10). The equations indicate that the effect of the fluid is to add a certain amount of mass to the body (M_{11} to body 1), and an external force which is proportional to the acceleration of the adjacent body. Thus the acceleration of one body affects the force on the adjacent body. The force is a strong function of the interbody gap, reaching large values for very small gaps. It should be noted that fluid coupling is based on fluid inertial effects and does not constitute damping. Fluid damping was not included in the model.

Fluid coupling terms were included in the equations of motion for fuel masses vibrating within the racks and for racks vibrating adjacent to other racks or the pool wall. The coupling terms modeling the effects of fluid flowing between adjacent racks were computed by assuming that all adjacent racks are vibrating 180 degrees out of phase with the rack being analyzed. Therefore, only one rack was considered surrounded by a hydrodynamic mass computed as if there were a plane of symmetry in the middle of the gap region.

Fluid virtual mass was included in the vertical direction vibration equations of the rack. Virtual inertia was also added to the governing equations corresponding to the rotational degrees of freedom. The effect of sloshing of water in the pool was neglected. This effect was shown to be negligible at the bottom of the pool.

Several questions were raised regarding the conservatism of the fluid coupling parameters used in the analysis: (1) The Fritz approach makes the assumption that the vibratory deflections are small relative to the size of the gaps. This assumption does not correspond to the conditions that would prevail during an earthquake where the rack-to-fuel and rack-to-rack displacements would be as large as the gaps. Fluid coupling coefficients are calculated on the basis of a constant gap assumption. As fuel racks move away from each other, the coupling coefficients should decrease, resulting in lower fluid coupling forces and possibly higher velocities. (2) The assumption that adjacent racks are vibrating 180 degrees out of phase seems to maximize the retarding effect of fluid forces and reduce the maximum impact velocities of the racks. This can result in unconservative rack-to-rack impact forces. (3) The rack-to-fuel fluid coupling terms were calculated based on the assumption that the fuel assemblies are solid square cross-sectional bodies, and that all of the surrounding water flows in the fuel assembly/cell wall space around the periphery of the fuel. In reality, the fuel assemblies are arrays of fuel rods with gaps between rods. As a fuel assembly vibrates within a cell, water can flow both around and through the fuel. The resulting fluid coupling forces can then be much lower than predicted by this model.

The Licensee provided additional information to justify the conservatism of the fluid coupling assumptions. Previous studies by Singh and Soler (Ref. 11) have shown that for large deflections, the contribution of the fluid leads to terms in the mass matrix and to terms which can be considered as non-linear springs. For the small deflection assumption, the non-linear spring terms disappear and only the mass matrix terms are included as shown in the equations above. The referenced paper provided the results of a study which considered the effects of the non-linear spring terms in a fuel assembly/cell model. The Licensee stated that the study demonstrated that the inclusion of these terms leads to lowering of the structural response. In response to the question regarding the consideration of flow area through the fuel assemblies, the Licensee indicated that the flow of water through a fuel assembly array of rods involves repeated changes in the flow cross-sectional area which would result in significant hydraulic pressure losses. The hydraulic pressure loss due to flow through the narrow convergent/divergent

channels is an important mechanism for energy loss from the vibrating rack system.

The referenced paper was reviewed for applicability. The study involved the non-linear seismic analysis of a simplified two degree of freedom model of a single fuel assembly/rack cell system. The fuel assembly was modeled as an unperforated square cross-section to simulate a channeled BWR fuel assembly. Equations of motion were written to incorporate large deflection inertial coupling and fluid damping due to frictional losses. A time history analysis was performed by applying a sinusoidal ground acceleration to the model. Cases which were analyzed included the following considerations: 1) No fluid effects, 2) Small deflection fluid coupling, 3) Large deflection fluid coupling, no fluid damping, 4) Large deflection fluid coupling with damping, 5) Large deflection fluid coupling with reduced damping. In case 5, the fluid damping was taken as 1% of the values used in case 4 in an attempt to simulate the possible damping effect of unchannelled fuel assemblies. The authors recognized the differences in fluid effects between unchannelled fuel such as the St. Lucie PWR fuel assemblies and channelled fuel assemblies used in BWR's. Channelled fuel assemblies can be appropriately represented as solid square cross-sectional bodies. The authors stated, "It is clear that the damping and virtual mass effects from an unchannelled fuel assembly should be substantially less since the confined fluid has more unobstructed area in which to flow as the fuel assembly moves relative to the cell wall. In addition, there are substantial differences in the flow field which should be considered in any analysis of unchannelled fuel. Nevertheless, case 5 may give some indication of what might be expected if only unchannelled fuel assemblies are in the rack".

The results of the study were presented in terms of fuel-to-rack impact forces and rack spring forces. The latter forces are a measure of rack stress level and pool floor loads. The results showed that the forces predicted by the small deflection model (case 2) exceeded the forces predicted by the large displacement models with damping (cases 4 and 5). A comparison between the results of the small deflection (case 2) model and the large deflection model with no damping (case 3) showed that the small deflection model predicted higher rack spring forces but lower fuel to rack impact forces.

The referenced study does not resolve all of the concerns related to the fluid coupling model assumptions. It provides evidence that large deflection inertial effects combined with damping tend to predict lower forces then a small deflection model. However, none of the models properly modeled fluid inertial effects for unchannelled fuel as is used in St. Lucie. The reduced damping used in case 5 was only meant to give an indication of trends which might be seen for unchannelled versus channelled fuel response. There was no analytical or experimental evidence to demonstrate the equivalence of case 5 parameters to unchannelled fuel parameters.

On the other hand, the case 1 results (vibration in air, no fluid effects) may be interpreted as an upper bound case. When compared with the case 2 small deflection model results, case 1 predicted 25% higher fuel to rack impact forces and 20% higher rack spring forces than case 2. When viewed together, the results of the 5 cases provide a measure of the sensitivity of variations of fluid coupling parameters in predicting seismic response forces. This together with safety margins can be used to assess the adequacy of the design.

4.1.3 Friction Effects

Friction elements were used at the bottom of rack support leg elements of the model. The value of the coefficient of friction was based on documented test results given in Reference 12. The results of 199 tests performed on austenitic stainless steel plates submerged in water showed a mean value of coefficient of friction to be 0.503 with a standard deviation of 0.125. Based on twice the standard deviation, the upper and lower bounds are 0.753 and 0.253, respectively. Two separate analyses were performed for each load case with values of coefficient of friction equal to 0.2 (lower limit) and 0.8 (upper limit), respectively.

The Licensee was asked to provide justification for using the same friction coefficient for both static and sliding rack conditions. He indicated that there is only a small difference between the static and sliding values. The use of both an upper and lower bounding value is judged to be appropriate. Previous studies have indicated that low friction results in maximum sliding response of the racks while high friction results in maximum rocking or tilting response. Consideration of both cases should provide worst case displacements, stresses and impact loads.

4.1.4 Damping

Since the model assumed that the fuel rack gridwork and baseplate are rigid, and the fuel assemblies can be treated as independent lumped masses, no damping resulting from structural deformations of the components was assumed. Structural damping was included in all of the impact spring elements. For SSE load conditions, 2% structural damping was used. This value is in accordance with the FSAR and represents an acceptable, conservative value for impact damping.

4.1.5 Seismic Loads

Seismic floor response spectra for the spent fuel pool floor were developed using the methods described in the FSAR. The parameters of the original lumped mass model of the Fuel Handling Building were adjusted to reflect the increased mass corresponding to the new high density spent fuel storage racks. New response spectra curves were generated using the same method which was used in the original dynamic analysis. Minimum and maximum fuel rack weights were considered in the analysis, corresponding to the empty

and full conditions of the racks. Three ground motion acceleration records (as used in the original plant design) were used as input. These six combinations of parameters resulted in six response spectra curves, which were then broadened ± 20% and enveloped into one curve which envelopes the full spectrum of rack loading conditions. Six such curves were developed, two (OBE and SSE) for each direction (NS, EW, vertical). The response spectrum curves are included in the Licensee's Safety Analysis Report (Reference 1)

The revised response spectra were used to generate statistically independent acceleration time histories, one for each of the three orthogonal directions. A computer program was used to generate the artificial time histories as a sum of sinusoidal waves. The program used a iteration approach whereby the calculated response provided by the simulated seismic excitation was compared with the "target" design response spectrum. The amplitudes of the sine waves were modified at each iteration step so as to obtain the best agreement at certain control frequencies specified by the user. The resulting time histories used in the fuel rack analysis are shown in Figures 13 to 15.

The Licensee was asked to provide a comparison of the design response spectra with the artificial time history response spectra. This comparison was provided in terms of velocity response spectra plots in Reference 3a. The plots showed reasonable agreement between the calculated curves and the design curves.

Based on the Licensee's description, the methodology used to develop the seismic input for fuel rack analysis is acceptable and consistent with industry practice.

4.1.6 Load Cases

Rack modules B2, G1 and H1 (see Figure 1) were analyzed to show that structural integrity is maintained during a seismic event. The Licensee was asked to provide the basis for selection of these specific racks and gave the following information:

Module B2 is representative of a region 1 rack. It is the largest region 1 rack and is located in a corner of the pool.

Module G1 is a large region 2 rack located in a corner of the pool wall and the cask area wall. This rack has six feet, two of which have an initial gap and are designed to come into contact with the floor only when rocking is sufficient to close the gap. The eccentric placement of its main support legs causes this rack to be relatively more prone to rocking, thus resulting in potentially higher displacements and stresses than a more conventional region 2 rack.

Module H1 is a region 2 rack with a cut-out and one additional support foot. For conservatism, the rack was considered to have 104 cells loaded with fuel but used a planform for analysis that was less stable than the planform actually present.

For each rack module, several analyses were performed to investigate the variations in friction coefficient (COF = 0.2 and 0.8) and fuel load condition (fully loaded, half full and empty).

The Licensee's choice of modules does not cover every configuration but the selection was based on reasonable conservative considerations such as large weight and tendency to rock. All of the rack modules analyzed are located next to a pool wall or corner. Modules in this area would have less significant fluid coupling forces. The variation in friction coefficient and fuel load cover a reasonable range of conditions.

4.1.7 Analysis Method

Once the rack seismic models were assembled, equations of motion of the system were written and solved using the DYNARACK computer program. The analysis method is based on the component element method of analysis described in Reference 13. The solution of the problem involves the following steps:

1. Development of a mathematical model of the rack structure in terms of lumped masses, non-linear springs, fluid coupling elements, and provisions for three dimensional kinetic degrees of freedom.

2. Development of equations for the kinetic energies of the rack, the fuel assemblies, and the entrained and coupling fluid energies.

3. Application of Lagrange's formulation to assemble the displacement coupled second order differential equations in the prescribed generalized coordinates. The set of equations are then numerically solved by the DYNARACK computer program.

The Licensee was asked to provide additional information on the DYNARACK program and its verification. This program is a refine version of the DYNAHIS program which has been used and accepted by NRC in previous fuel rack analyses. Both programs provide the numerical solution for non-linear models of structures under time history inputs. The Licensee stated that verification of the DYNARACK program was carried out in accordance with Quality Assurance Procedures following 10CFR50, Appendix B. Validation of DYNARACK results involves: (1) comparison with analytical solutions and with numerical solutions obtained from other computer codes, and (2) manual calculations of mass atrix terms and comparison with results determined internally by DYNARACK.

Based on the information provided, the application of the component element method and use of the DYNARACK program to analyze the non-linear lumped mass models of the fuel racks is acceptable.

4.1.8 Analysis Results

The DYNARACK program computed displacements and element forces at each instant of time during the earthquake. Stresses at critical rack locations were computed based on the nodal forces. These stresses were checked against the design limits. Stresses were presented in terms of highest stress factors for each load case. Stress factors R_1 through R_6 were defined as the maximum computed stress to its allowable value. The stress limits were derived from the ASME Code, Section III, Subsection NF, in conjunction with material properties from the Section III appendices and supplier's catalog. The faulted condition (Level D) limits from Section III, Appendix F, were used for the SSE allowables.

The stress factors were defined as follows:

R_1 - Ratio of direct tensile or compressive stress on a net section to its allowable value (note support feet only support compression)

R_2 - Ratio of gross shear on a net section to its allowable value

R_3 - Ratio of maximum bending stress due to bending about the x-axis to its allowable value for the section

R_4 - Ratio of maximum bending stress due to bending about the y-axis to its allowable value

R_5 - Combined flexure and compressive factor (as defined in ASME Code Section III, Appendix XVII)

R_6 - Combined flexure and tension (or compression) factor (as defined in ASME Code, Section III, Appendix XVII)

The limiting value of each stress factor is 1.0 for OBE conditions. For SSE conditions, the limit is 2.0 for the rack material and upper part of the support feet, and 1.53 for the lower support feet.

Maximum stress factors for the rack base and support feet for each load case are presented in Table 4. The Licensee stated that the critical stress factors reported for the support feet were all for the upper segment of the feet and should be compared to a limiting value of 2.0. Table 4 also presents maximum fuel assembly-to-cell impact loads, rack-to-rack impact loads and rack-to-wall impact loads. Table 5 presents maximum rack displacements and floor loads.

In addition to determining stress factors, the Licensee performed additional calculations to evaluate the adequacy of welds, the effects of rack-to-rack and rack-to-fuel impact loads, and other local effects. These calculations were not included in the Safety Analysis Report (Ref. 1). During the audit at Holtec International, sample calculations were reviewed. Table 6 summarizes the safety factors in critical rack locations.

4.1.9 Evaluation of Results

The results of the Licensee's seismic analysis indicated that all stresses in the racks would meet their allowables, impact loads on fuel assemblies would not damage the fuel, and rack displacements would not be large enough to result in impacts with the pool wall. However, considering the potentially unconservative modeling assumptions discussed in Sections 4.1.1 and 4.1.2 regarding multiple rack effects, rattling fuel mass representation, and fluid coupling considerations, it was judged prudent to have the Licensee perform additional studies to address the questions raised. An issue of particular concern was the possibility that the single rack models would underpredict displacements of racks adjacent to pool walls and that rack-to-wall impacts would occur. The walls were not designed to accommodate seismic impact loads from the fuel racks and damage to the walls or liner could result in unacceptable leakage of water from the pool.

The additional studies performed by the Licensee are discussed in Section 4.2. The evaluation of their results and the overall assessment of the seismic analysis results is given in Section 4.2.3.

4.2 Additional Fuel Rack Seismic Studies

As a result of questions raised during the review of the fuel rack dynamic analysis model (Section 4.1.1), the Licensee performed additional analyses. Single rack model studies were carried out to address questions regarding the adequacy of treating the fuel assemblies as five independent rattling masses and using twice the fuel weight in the models. Multiple rack studies were performed in response to questions regarding the adequacy of a single rack model in predicting forces and displacements that would occur if multiple rack effects were considered. A description of these additional analyses and their results is discussed below.

4.2.1 Single Rack Studies

Two additional seismic analyses of single rack models were performed for a fully loaded G1 rack with coefficient of friction equal to 0.8 and a fuel weight per cell equal to 1300 lbs. The design basis analysis had indicated that this load case was the most critical case which predicted the highest overall response. In the first additional analysis (Case 1), the fuel was modeled in the same manner as the design basis analysis, i.e. as five independent rattling masses. In the second run (Case 2), the five fuel masses were connected by springs, thus providing a beam representation of the fuel assemblies. The springs did not represent the actual flexural rigidity of a fuel assembly but were based on the properties of a fictitious channel around the assembly. This flexural rigidity appears to be of the same order of magnitude as the actual flexural rigidity and is judged to be reasonable for this study.

The results of the single rack model studies are presented in Table 7. Key forces, stresses and displacements are compared. The Case 1 versus Case 2 comparison indicates generally comparable results. The elastically coupled mass model (Case 2) results do not exceed the independent mass model (Case 1) results by more than 15%. However, the results of both cases are clearly enveloped by the design basis case by significant margins. Therefore, this study demonstrates that modeling the fuel with twice its actual weight provides a significant level of conservatism which adequately compensates for the smaller potential unconservatism of modeling the fuel as independent rattling masses.

4.2.2 Multiple Rack Studies

The Licensee performed additional seismic analyses of a row of four racks to investigate the adequacy of the design basis single rack models in predicting the response of fuel racks in the actual multiple rack fuel pool environment. An issue of particular concern was the possibility that in a multiple rack environment, the peripheral racks may hit and damage the walls of the pool.

The four racks studied were racks A1, A2, B1 and B2, next to the south pool wall shown in Figure 1. A simplified planar two dimensional model of the row of racks was developed. Each rack was represented by a four degree of freedom model representing horizontal and vertical translations of the rack, planar rotation (rocking) of the rack, and horizontal translation (rattling) of the fuel assemblies. The racks were assumed to be fully loaded with fuel using the nominal fuel weight (1250 lb/assembly) which is half the weight used in the single rack design basis models. Support spring constants, impact spring constants and gaps were consistent with the design basis models. Fuel to cell fluid coupling coefficients were reduced to 50% of the "blunt body" value in an attempt to compensate for the potential overprediction of fluid coupling forces predicted by the design basis models as discussed in Section 4.1.2. Runs were made for both the 0.2 and 0.8 coefficients of friction. The seismic loading of the E-W and vertical SSE were applied simultaneously to the model.

The key responses were compared with the corresponding responses from the single rack design basis analysis of the B2 rack. These results are presented in Tables 8 and 9. The Licensee stated that the results support the conservatism of the design basis model. Both displacements and impact loads were predicted to be lower by the multiple rack model. The smaller displacements supported the conclusion that the peripheral racks would not hit the pool walls.

During the course of the analysis, the Licensee decided to modify the side gap spacing between the pool wall and the peripheral racks from 4.5 inches to 5.5 inches. The multiple rack analysis was rerun to reflect the revised spacing. A comparison of responses between the two multiple rack studies is presented in Table 10. The results showed slight increases in responses but

the loads and displacements were still enveloped by the single rack design basis results by significant margins.

In evaluating the results of this study, several factors had to be weighed. The row of racks that was selected for analysis was a representative row and was not expected to have the highest response. The Licensee therefore made an appropriate comparison when he compared the results of this study to the results of the B2 rack design basis model. It was important to evaluate the results on a comparative basis and recognize that they are not worst case results.

It should also be recognized that the results may be somewhat unconservative because the model assumed planar two-dimensional motion. In this type of model, only one horizontal component of the earthquake could be applied. Three dimensional cross-coupling effects could not be accounted for. Nevertheless, it is reasonable to expect this 2-D multiple rack model to capture the primary response and potential interaction effects of a row of fuel racks in one direction.

4.2.3 Overall Evaluation of Seismic Analysis Results

The results of the additional studies presented in Tables 7 through 10 support the adequacy of the design basis (single rack model) results. Both the single and multiple rack models used in these studies utilized actual fuel weight instead of twice the fuel weight as used in the design basis models. It appears that the high fuel weight was the most significant contributor to the conservatism of the design basis model results. Further studies would be required to prove that single rack models using actual fuel weights would always give conservative results. However, for this application, these studies have provided a reasonably high level of confidence in the adequacy of the results. A review of the safety factors predicted by the design basis models (Tables 4 through 6) provide further assurance that the racks are designed with sufficient safety margin to compensate for uncertainties in the seismic analysis.

Based on the results of the Licensee's seismic analyses, it is concluded that during an SSE, the fuel racks will maintain their structural integrity, fuel assemblies will not sustain damage, and rack displacements will not be large enough to result in pool wall impacts.

4.3 Thermal Analysis

Weld stresses due to heating of an isolated hot cell were computed. The analysis assumed that a single cell is heated over its entire length to a temperature above the value associated with all surrounding cells. No thermal gradient was assumed in the vertical direction. Using the temperatures associated with this unit, weld stresses along the entire cell length were found to be below the allowable value with a safety factor of 2.2 as indicated in Table 6.

4.4 Fuel Handling Accident Analyses

The Licensee performed structural analyses and evaluations for three postulated fuel handling accidents. The accidents and the analysis summaries were described in the Safety Analysis Report as follows:

1. Dropped Fuel Accident I

   A fuel assembly is dropped from 36 inches above the module, falls into a cell, and impacts the base. The final velocity and total energy at impact was calculated. To study the baseplate integrity, it was assumed that the energy was directed toward punching of the baseplate in shear and thus was transformed into work done by the shear stresses. It was determined that shearing deformation of the baseplate was less than the thickness of the baseplate so it was concluded that local piercing of the baseplate will not occur. Direct impact with the pool liner would not occur. The subcriticality of the adjacent fuel assemblies would not be violated.

2. Dropped Fuel Accident II

   One fuel assembly drops from 36 inches above the rack and hits the top of the rack. By applying an energy balance approach, it was determined that permanent deformation of the rack would be limited to the top region such that the rack cross-sectional geometry at the level of the top of the active fuel and below is not altered. The region of local permanent deformation was shown not to extend below six inches from the rack top.

3. Jammed Fuel Handling Equipment

   A 4000 pound uplift force was applied at the top of the rack at the weakest storage location. The force was applied on one wall of a storage cell as an upward shear force. The plastic deformation was found to be limited to the region well above the top of the active fuel.

The Licensee concluded that these analyses proved that the rack modules are engineered to provide maximum safety against all postulated abnormal and accident conditions. During the audit, the Licensee was asked to provide the calculations for the dropped fuel accident I for a detailed review. The review and evaluation of this calculation is discussed below.

A key element of the dropped fuel accident analysis was the calulation of impact velocity. The model for predicting velocity treated the fuel assembly as a free body falling through a channel. The model considered gravity and fluid forces and accounted for virtual mass effects. Fluid forces were determined by applying basic fluid mechanics laws of continuity and energy.

However, the model was found to be unconservative in calculating the pressure build-up within a cell. The model assumed that as a fuel assembly falls through a rack cell, all of the water in the cell is forced out through the baseplate holes at the bottom. Flow through the fuel assembly was neglected. Since that flow area is significant, the model may have overpredicted the fluid retarding force and underpredicted the impact velocity and kinetic energy of the fuel assembly as it hits the baseplate.

In evaluating the potential penetration of the baseplate, the kinetic energy of the fuel assembly was set equal to the work performed as a slug is punched out of the baseplate. The calculation showed that the depth of penetration is less than the plate thickness and concluded that penetration would not occur. Furthermore, the Licensee stated that the purpose of the calculation was only to show that there is no danger to the pool liner. In the event of a dropped fuel assembly, the base plate could be expected to plastically deform and separate from the rack cells but this would not affect center-to-center spacing. The Licensee stated that the baseplate, even with plastic bending occuring, would not touch the liner floor.

A number of weaknesses were noted in the evaluation: 1) The equation for work required to penetrate the plate lacked sufficient experimental verification. The use of empirical penetration formulas would have been more appropriate. 2) The shear area was underpredicted. This area was based on the solid square cross-sectional area of the fuel assembly. In reality, the fuel assembly rests on four legs with a much smaller contact area. 3) The conclusion that the baseplate would not contact the floor was not substantiated by any calculation for plastic deformation or ductility ratio.

Although a number of weaknesses were identified, there were also a number of conservatisms which must be considered. The fuel weight used in the velocity and energy calculations was 2500 pounds which is nearly twice the actual weight. The fuel was assumed rigid for impact stress calculations. All of the impact kinetic energy was assumed to be directed toward punching of the baseplate in shear. None of this energy was directed toward bending of the plate or compressing the fuel.

To evaluate the final conclusions of this analysis, BNL performed some simplified calculations using bounding assumptions. Kinetic energy at impact was calculated on the basis of the actual fuel weight and velocity of a free-falling body in air. The resulting kinetic energy was approximately twice that used in the Licensee's calculations. Baseplate penetration was evaluated by empirical penetration formulas for steel targets commonly used for missile penetration analysis in the nuclear industry. Both the Ballistic Research Laboratory (BRL) formula and the Stanford Equations were applied (Ref. 14). The missile contact area was based on the fuel assembly leg area rather than the total cross-sectional area. The results of this analysis concurred with the Licensee's conclusion that baseplate penetration would not occur.

The Licensee's conclusion that the baseplate would not contact the pool floor could not be verified by a simplified analysis due to the complex nature of the structure. However, it should be noted that since the pool floor had been shown capable of withstanding a fuel cask drop, it would be reasonable to conclude that the floor has sufficient strength to withstand the impact load resulting from the drop of a single fuel assembly.

4.5 Spent Fuel Pool Analysis

4.5.1 Loads and Load Combinations

The reanalysis of the spent fuel pool considered the following design loads:

Structural Dead Load (D)
Live Load (L)
Seismic Loads (SSE and OBE)
Normal Operating Thermal Loads (T)
Accident (Loss of Fuel Pool Cooling) Thermal Load (T_A)
Fuel Cask Drop Load (M)

The following load combinations, from the St. Lucie, Unit No. 1, Updated FSAR, Section 3.8.1.5, were considered:

a) Normal Operation
$1.5\ (D+T) + 1.8L$

b) OBE Condition
$1.25\ (D+T+OBE+0.2L)$

c) SSE Condition
$1.05\ (D+T+0.2L) + 1.0\ SSE$

d) Accident and Cask Drop
$1.05\ (D+T_A+0.2L)$

For the evaluation of the liner and liner anchors, the above load combinations were applied except that load factors for all cases were equal to 1.0.

Linear analyses were performed initially to determine the critical load combinations. As a result, the following loading cases were selected for the non-linear concrete cracking analysis:

1. $1.5D + 1.8L$

2. $1.05\ (D + T_{winter} + 0.2L) + 1.0\ SSE$

3. $1.05\ (D + T_{summer} + 0.2L) + 1.0\ SSE$

4. 1.05 (D + 0.2L) + 1.0 SSE

5. 1.05 (D + T_A + 0.2L)

6. 1.05 (D + Twinter + 0.2L) + 1.0M

7. 1.05 (D + 0.2L) + 1.0M

4.5.2 Spent Fuel Pool Structure Analysis

A finite element model of the lower portion of the spent fuel pool structure was developed. Since the effect of the additional fuel rack load on the pool floor is limited to the mat in the pool area, the upper portion of the pool walls was not reevaluated. The model included the lower portion of the walls up to elevation 45.25 ft, the pool floor and the underlying soil. The structural components included in the model are shown in Figure 16. A computer plot of the finite element model is shown in Figure 17 which shows the overall view of the model indicating the composite of the four exterior and one interior walls.

In this analysis, the EBS/NASTRAN program was used. The Licensee was asked to provide additional information on this computer program. This was provided in Reference 3c. EBS/NASTRAN is an enhanced NASTRAN program developed by Ebasco. It has all of the NASTRAN capabilities plus additional features. One of the additional features is the ability to perform concrete cracking analysis. This feature incorporates a special plate element which consists of a user-specified number of layers, each having a different proportion of steel to concrete area, representing the presence of reinforcing steel. Each layer will crack or re-close according to the stress-strain relationships of the concrete and steel. Thus, a cracking pattern and stress redistribution can be determined. A verification problem was submitted which demonstrated good agreement of analytical results with experimental data.

The maximum stress results in the concrete and rebars from the nonlinear analysis of the seven load cases are presented in Table 11. The design stress limits described in the St. Lucie Unit 1 FSAR were used in the evaluation. The capacity of all sections was computed in accordance with ACI 318-63 Part IV-B, Ultimate Strength Design. Table 11 indicates minimum safety factors for each loading case. Safety factor is defined as allowable stress divided by maximum actual stress including load factors. The smallest safety factors are 1.10 for reinforcement bar tension, 2.65 for concrete compression, and 1.05 for concrete shear. Based on these results, it can be concluded that the spent fuel pool structure can accomodate the revised loads.

4.5.3 Pool Liner and Anchorage Analysis

The liner and its anchors were evaluated for the temperature load, the strain induced load due to the deformation of the floor, and the horizontal seismic load. The POSBUKF computer program was used for the liner buckling

analysis due to the temperature and strain induced loads. The Licensee was asked to provide additional information on this computer program. This was provided in Reference 3c. POSBUKF is a program developed by Ebasco to examine the elastic post-buckling behavior of a flat plate subjected to thermal and lateral loading using an energy method approach. The program determines the deflected shape of a buckled plate by minimization of potential energy, and from this calculates plate stresses utilizing strain-displacement and stress-strain relationships for the particular case under study. The program was verified by comparison of test problem results to hand calculation results.

The liner anchors were evaluated for the unbalanced liner in-plane force due to the temperature and strain induced loads, as well as horizontal seismic in-plane shear force.

The acceptance criteria for the liner and anchors was in accordance with the requirements of ACI-ASME Section III, Division 2, Subsection CC for containment liners. The critical loading case for the liner was the case which included accident thermal load. The analysis showed that the maximum calculated strain was below the Code Strain allowable with a safety factor of 5.2. The buckling analysis indicated that the liner plate would not buckle.

Two loading conditions were considered in the liner anchor evaluation; one was the strain-induced load which produced the unbalanced in-plane force at the edge of the pool area, and the other was the horizontal seismic load transmitted through friction between the rack support and the liner. The analysis indicated that Code allowables were met with minimum safety factors of 2.5 for the strain-induced load case, and 1.33 for the seismic load case. Based on these results, it can be concluded that the fuel pool liner and anchorage can accommodate the revised loads.

5.0 CONCLUSIONS

Based on the review and evaluation of the Licensee's Safety Evaluation Report and additional information provided by the Licensee during the course of this review, it is concluded that the proposed St. Lucie Unit 1 fuel racks have sufficient structural capacity to withstand the effects of all required environmental and abnormal loadings discussed in this report. Impact loads generated by the closing of fuel assembly to fuel rack cell gaps during the SSE would not lead to damage. Furthermore, the existing spent fuel pool should have adequate capacity to accommodate the increased loads resulting from the storage of more fuel assemblies in the pool.

All concerns related to the adequacy of the dynamic single rack design basis models including multiple rack effects (Section 4.1.1), rattling fuel mass representation (Section 4.1.1), and fluid coupling considerations (Section 4.1.2) were resolved by additional studies performed by the Licensee. These studies (Section 4.2.) investigated multiple rack effects and the sensitivity of model variations. They demonstrated that the single rack design basis models predict conservative seismic loads and displacements.

Although the studies were limited in scope, they provided evidence which indicated that the most significant contributor to the conservatism of the design basis models was the use of twice the fuel assembly design weight in the models. An additional analysis of a single rack model which used the actual fuel weight predicted displacements and impact loads which were approximately half of the corresponding design basis model results. Analysis of multiple rack models which also used actual fuel weights showed similar trends in the results. Thus it was judged that the design basis models have sufficient conservatism to compensate for potential underprediction of response due to the modeling concerns discussed in this report.

6.0 REFERENCES

1. Florida Power and Light Company, St. Lucie Plant - Unit No. 1, Spent Fuel Storage Facility Modification Safety Analysis Report, Docket No. 50-335.

2. NRC letter, G. Bagchi to E. Tourigny, "Request for Additional Information - Proposed License Amendment - Spent Fuel Rerack, St. Lucie Unit 1, Docket No. 50-335, TAC #65587", dated August 7, 1987.

3a. FP&L letter L-87-422, C.O. Woody to USNRC, "St. Lucie Unit 1, Docket No. 50-335, Spent Fuel Pool Rerack - Design and Analysis", dated October 20, 1987.

3b. FP&L letter L-87-535, C.O. Woody to USNRC, "St. Lucie Unit 1, Docket No. 50-335, Spent Fuel Rerack-Design and Analysis," dated December 23, 1987.

3c. FP&L letter L-37-536, C.O. Woody to USNRC, "St. Lucie Unit 1, Docket No. 50-335, Spent Fuel Rerack-Design and Analysis," dated December 23, 1987

4. USNRC letter to all power reactor licensees, from B.K. Grimes, dated April 14, 1978, "OT Position for Review and Acceptance of Spent Fuel Storage and Handling Applications", as amended by the NRC letter dated January 18, 1979.

5. US Nuclear Regulatory Commission, "Standard Review Plan for the Review of Safety Analysis Reports for Nuclear Power Plants," NUREG-0800, Revision 1, July, 1981.

6. Ebasco Drawing 8770-G-830, "Fuel Handling Bldg Spent Fuel Pit Liner", Sheet 1, Rev. 4; Sheet 2, Rev. 2; Sheet 3, Rev. 4; Sheet 4, Rev. 0.

7. Joseph Oat Drawing D-8286, Rev. 1, "Details Region I, Spent Fuel Storage Racks".

8. Joseph Oat Drawing D-8288, Rev. 1, "Plan Diagram of Can to Gap Element Joints, Region I, Spent Fuel Storage Racks".

9. Combustion Engineering Drawing E-13172-161-101, Rev. 5, Sheet 1 of 2, "Fuel Bundle Assembly".

10. R.J. Fritz, "The Effects of Liquids of the Dynamic Motions of Immersed Solids", Journal of Engineering for Industry, Transactions of the ASME, February, 1972, pp 167-172.

11. K.P. Singh and A.I. Soler, "Dynamic Coupling in a Closely Spaced Two-Body System Vibrating in a Liquid Medium: The Case of Fuel Racks", 3rd International Conference on Nuclear Power Safety, Keswick, England, May 1982.

12. E. Rabinowicz, "Friction Coefficients for Water Lubricated Stainless Steels for a Spent Fuel Rack Facility", a report for Boston Edison Company, MIT, 1976.

13. S. Levy and J.P.D. Wilkinson, "The Component Element Method in Dynamics", McGraw-Hill, 1976.

14. R.C. Gwaltney, "Missile Generation and Protection in Light-Water-Cooled Power Reactor Plants", ORNL-NSIC-22, September 1968.

TABLE 1

TABLE OF MODULE DATA

MODULE I.D.	NO. OF MODULES	NO. OF CELLS IN N-S DIRECTION	NO. OF CELLS IN E-W DIRECTION	TOTAL NO. OF CELLS PER MODULE
Region 1 A1 to A2	2	9	9	81
Region 1 B1 to B2	2	9	10	90
Region 2 C1 to C4	4	13	9	117
Region 2 D1 to D3	3	13	8	104
Region 2 E1 to E2	2	11	8	88
Region 2 F1	1	12	8	96
Region 2 G1 to G2	2	12	9	108
Region 2 H1	1	13	8	96

TABLE 2

MODULE DIMENSIONS AND WEIGHTS

MODULE I.D.	NOMINAL CROSS-SECTION DIMENSIONS N-S	E-W	ESTIMATED DRY WEIGHT (lbs) PER MODULE
Region 1 A1 to A2	90-1/4"	90-1/4"	26,700
Region 1 B1 to B2	90-1/4"	100-7/16"	29,800
Region 2 C1 to C4	115-11/16"	80-1/6"	24,100
Region 2 D1 to D3	115-11/16"	71-3/16"	21,500
Region 2 E1 to E2	97-7/8"	71-3/16"	18,200
Region 2 F1	106-3/4"	71-3/16"	19,800
Region 2 G1 to G2	106-3/4"	80-1/16"	22,300
Region 2 H1	115-11/16"	71-3/16"	19,800

TABLE 3

RACK MODEL PARAMETERS

Rack Module	H1	B2	G1*
K_I (#/in)	$.359 \times 10^6$	$.310 \times 10^6$	$.372 \times 10^6$***
K_w (#/in)	$.1 \times 10^7$	$.1 \times 10^7$	$.1 \times 10^7$**
K_f (#/in)	$.221 \times 10^{10}$	$.221 \times 10^{10}$	$.221 \times 10^{10}$
K_d (#/in)	$.112 \times 10^7$	$.109 \times 10^7$	$.123 \times 10^7$
K_R $\left(\frac{\#in}{rad}\right)$	$.567 \times 10^8$	$.567 \times 10^8$	$.567 \times 10^8$
h (in)	6.125	6.125	6.125
H (in)	169	169	169
W_4 (lb)	19800	29800	22300
W_f (lb)	260000	225000	270000
L_x (in)	71	90	80
L_y (in)	116	100	107

* 6 support feet (.1875" initial gap on 2 of 6 supports)
** Where 2 racks are adjacent, gap between base plates = .625"; gap between girdle bars = .375"
*** Nominal gap between cell wall and fuel assembly = .125"

K_I - fuel assembly-to-cell wall impact spring rate
K_w - rack-to-rack or rack-to-wall impact spring rate
K_f - friction spring rate (active prior to sliding)
K_R - spring rate representive of rotational resistance between liner and support leg
K_d - support leg axial spring rate
h - length of support leg
H - height of rack above base plate
W_r - Weight of rack without fuel
W_f - Weight of fuel
L_x - Planform dimension (X-direction)
L_y - Planform dimension (Y-direction)

TABLE 4 - RACK SEISMIC ANALYSIS RESULTS SUMMARY
IMPACT LOADS AND STRESS FACTORS

Module/Load Case	Fuel Assembly to cell Impact Load (#)	Rack/Rack Impact load GB/BP *	Rack/Wall Impact Load GB/BP	STRESS FACTORS (Upper Values for Rack Base - Lower Values for Support Feet)					
				R_1	R_2	R_3	R_4	R_5	R_6
G1, μ=.2,full	9.967×10^4	4.994×10^4/ 1.763×10^4	0/0	.094/.287	.027/.085	.219/.175	.174/.224	.331/.436	.377/.467
G1, μ=.8,full	9.438×10^4	1.022×10^5/0	0/0	.133/.421	.100/.427	.392/.918	.267/.577	.495/1.137	.562/1.27
G1, μ=.8, convergence	1.319×10^5	1.359×10^5/0	0/0	.130/.427	.100/.426	.391/.917	.264/.549	.506/1.136	.576/1.27
G1, μ=.2,1/2 full	9.046×10^4	1.951×10^4/0	0/0	.052/.169	.014/.047	.120/.098	.190/.128	.262/.254	.300/.269
G1 μ=.8,1/2 full	9.493×10^4	8.264×10^4/0	0/0	.088/.256	.061/.229	.259/.460	.221/.599	.369/.702	.425/.792
B2 μ=.2,empty	2.006×10^4	0/0	0/0	.014/.046	.005/.013	.038/.025	.048/.035	.061/.063	.030/.066
B2 μ=.8,empty	7.896×10^3	2.401×10^4	0/0	.017/.092	.025/.073	.077/.155	.059/.076	.107/.194	.124/.217
B2 μ=.2,full	8.016×10^4	5.312×10^4/0	0/0	.087/.211	.025/.063	.176/.117	.186/.159	.290/.311	.328/.321
B2 μ=.8,full	8.766×10^4	1.170×10^5/0	0/0	.110/.341	.078/.851	.353/.872	.341/.631	.505/1.076	.576/1.21
B2 μ=.8,1/2 full	7.484×10^4	3.780×10^4/0	0/0	.058/.220	.052/.242	.221/.492	.200/.247	.300/.666	.345/.740
H1 μ=.8,full	9.050×10^4	8.225×10^4/0	0/0	.119/.346	.087/.327	.320/.726	.340/.516	.572/.905	.655/1.02
H1 μ=.2,1/2 full	8.980×10^4	2.350×10^4/0	0/0	.050/.164	.014/.046	.097/.096	.180/.092	.245/.244	.280/.258
H1 μ=.8,1/2 full	1.077×10^5	5.946×10^4/0	0/0	.068/.218	.055/.199	.211/.439	.222/.405	.335/.582	.381/.653

* GB = GIRDLE BAR; BP=BASE PLATE

TABLE 5 - RACK SEISMIC ANALYSIS RESULTS SUMMARY
DISPLACEMENTS AND FLOOR LOADS

MODULE	LOAD CASE	MAX. DISP. DX (IN)	MAX. DISP. DY (IN)	MAX. VERT. DISPL. (IN)	MAX FLOOR LOAD (#) 4 FEET	MAX FLOOR LOAD (#) VERTICAL/SHEAR *
G1	μ=.2, full	.3884	.6305	0	$4,171 \times 10^5$	1.877×10^5/37540.
G1	μ=.8, full	1.8197	.6110	$.97377 \times 10^{-1}$	5.949×10^5	2.75492×10^5/186325.
G1	μ=.8, convergence	1.7407	.6147	$.90944 \times 10^{-1}$	5.877×10^5	279673./186242.
G1	μ=.2, 1/2 full	.3566	.4071	$.12229 \times 10^{-1}$	2.301×10^5	110685./22137.
G1	μ=.8, 1/2 full	.8427	.3744	$.85291 \times 10^{-1}$	3.903×10^5	167843./104113.
B2	μ=.2, "empty"	.1517	.0898	0	7.384×10^4	30353./6071.
B2	μ=.8, "empty"	.1120	.2287	$.43159 \times 10^{-1}$	8.950×10^4	60418./32103.
B2	μ=.2, full	.2464	.2088	0	3.724×10^5	137831./27566.
B2	μ=.8, full	.5317	.4238	$.29708 \times 10^{-1}$	4.593×10^5	223083./165014.
B2	μ=.8, 1/2 full	.3802	.2786	$.31333 \times 10^{-1}$	2.543×10^5	144247./113093
H1	μ=.8, full	.5092	.2548	$.31422 \times 10^{-1}$	5.181×10^5	226457./145819.
H1	μ=.2, 1/2 full	.2107	.2132	$.69853 \times 10^{-2}$	2.233×10^5	107217./21443
H1	μ=.8, 1/2 full	.2731	.2241	$.44346 \times 10^{-1}$	3.090×10^5	142827./93389.

* VERTICAL = Vertical Load
SHEAR = Shear Load

TABLE 6

SUMMARY OF SAFETY FACTORS IN CRITICAL FUEL RACK LOCATIONS

ITEM/LOCATION	SAFETY FACTOR	COMMENTS
Support foot to baseplate weld stress	2.44	
Cell to baseplate weld stress	3.15	
Cell to gap channel weld stress	2.94	Stress due to seismic loads
Cell to gap channel weld stress	2.20	Thermal stress due to effects of isolated hot cell
Impact load on girdle bar	2.17	
Girdle bar shear stress	1.70	
Cell wall stress due to girdle bar impact load	2.54	
Impact load between fuel assembly and cell wall	3.58	Based on cell wall limit load
Impact load between fuel assembly and cell wall	1.51	Based on plastic deformation of fuel spacer grids *
Shear load on baseplate near a support foot	3.0	
Corpressive stress in cell wall	4.56	Based on local buckling considerations
Rack to wall impact loads	-	No Impacts with pool walls occur at any location

* Safety factor on fuel rod crushing is significantly higher

TABLE 7

RESULTS OF SINGLE RACK STUDIES

FULLY LOADED G1 RACK WITH COF = 0.8

ITEM	INDEPENDENT FUEL MASSES (1300 lb/fuel)	ELASTICALLY COUPLED FUEL MASSES (1300 lb/fuel)	DESIGN BASIS MODEL (2500#/Fuel)
Fuel/Rack Impact (#/cell)	453.3	514.4	1221.3
Rack/Rack Impact (BP/GB) (#)	7.133×10^4/0.	6.249×10^4/0.	1.359×10^5/0.0
Rack/Wall Impact (BP/GB) (#)	0./0.	0./0.	0./0.
R6 Stress Factors (Rack Base/ Support)	.401/.736	.421/.795	.576/1.273
Max. Disp. DX (in.)	.5717	.5709	1.7407
Max. Disp. DY (in.)	.3230	.3479	.6147
Max. Vert. Disp. (in.)	.0823	.0802	.0909
Max. Floor Load (4 Feet) (#)	3.934×10^5	3.800×10^5	5.877×10^5
Max. Floor Load (#) Vertical/ Shear	180237./ 108454.	190218/ 110134	279673/ 186242.

TABLE 8

RESULTS OF MULTIPLE RACK STUDIES

FULLY LOADED A_1, A_2, B_1, B_2, RACKS WITH COF = 0.2

ITEM	MULTI-RACK MODEL	SINGLE RACK B2 Design Basis Model
Rack/wall at girdle bar - impact load	0#	0#
Rack/Rack at girdle bar - impact load	0#	$.5312 \times 10^5$
Rack/wall at base-plate - impact load	0#	0#
Rack cell wall to fuel assembly (per cell - impact load)	613.	891.
Vertical load on pool floor from one foot	$.6425 \times 10^5$ lb	1.378×10^5 lb
Rack/Rack at baseplate - impact load	0#	0#
Max. E-W rack displacement at top of rack	.126 inch	.2088 inch

TABLE 9

RESULTS OF MULTIPLE RACK STUDIES

FULLY LOADED A_1, A_2, B_1, B_2 RACKS WITH COF = 0.8

ITEM	MULTI-RACK MODEL	SINGLE RACK B2 Design Basis Model
Rack/wall at girdle bar - impact load	0#	0#
Rack/Rack at girdle bar - impact load	0#	1.17×10^5
Rack/wall at base-plate - impact load	0#	0#
Rack cell wall to fuel assembly (per cell - impact load)	612.	974. lb
Vertical load on pool floor from one foot	$.715 \times 10^5$ lb	2.231×10^5 lb
Rack/Rack at baseplate - impact load	0#	0#
Max. E-W rack displacement at top of rack	.091 inch	.4238 inch

TABLE 10

RESULTS OF MULTIPLE RACK STUDIES

SIDE GAPS (SG) = 4.5", 5.5"
FULLY LOADED A_1, A_2, B_1, B_2 RACKS

	COF = .8		COF = .2	
ITEM	SG = 4.5"	SG = 5.5"	SG = 4.5"	SG = 5.5"
Rack/Fuel Impact Load (per cell)	612.	604.	613.	618.
Rack/Wall Impact at Girdle Bar	0.	0.	0.	0.
Rack/Wall Impact at Baseplate	0.	0.	0.	0.
Rack/Rack Impact at Girdle Bar	0.	0.	0.	0.
Rack/Rack Impact at Baseplate	0.	0.	0.	0.
Max. Support Foot Load (1 foot)	71500.	78400.	64250.	65500.
Max. Horiz. Disp. at Top of Rack (in.)	.0911	.1196	.126	.1491

TABLE 11

SPENT FUEL POOL STRUCTURE

MAXIMUM STRESS SUMMARY

Loading Case (See Section 4.3	Maximum Stress of Rebar (psi)				Maximum Compressive Stress of Concrete (psi)				Maximum Shear Stress of Concrete (psi)			
	MAT	SF	WALL	SF	MAT	SF	WALL	SF	MAT	SF	WALL	SF
1	19,937	1.81	8,610	4.18	-616	6.46	-338	11.77	83	1.48	65	1.90
2	14,979	2.40	23,549	1.53	-938	4.24	-903	4.41	115	1.07	114	1.08
3	14,333	2.51	18,646	1.93	-653	6.09	653	6.10	107	1.15	115	1.07
4	18,153	1.98	18,743	1.92	-701	5.67	-444	8.96	80	1.54	40	3.07
5	20,403	1.76	32.715	1.10	1056	3.77	-1090	3.65	66	1.86	117	1.05
6	23,375	1.54	25,486	1.41	-1049	3.79	-722.	5.51	117	1.05	78	1.58
7	20,800	1.73	12,742	2.83	-576	6.91	-524	7.59	76	1.62	55	2.24

1. Ultimate Rebar Stress F_a = 36,000 psi
2. Ultimate Concrete Compressive Stress F_a = 3,978 psi
3. Ultimate Concrete Shear Stress F_v = 123 psi
4. SF = Safety Factor (See Section 4.5.2)

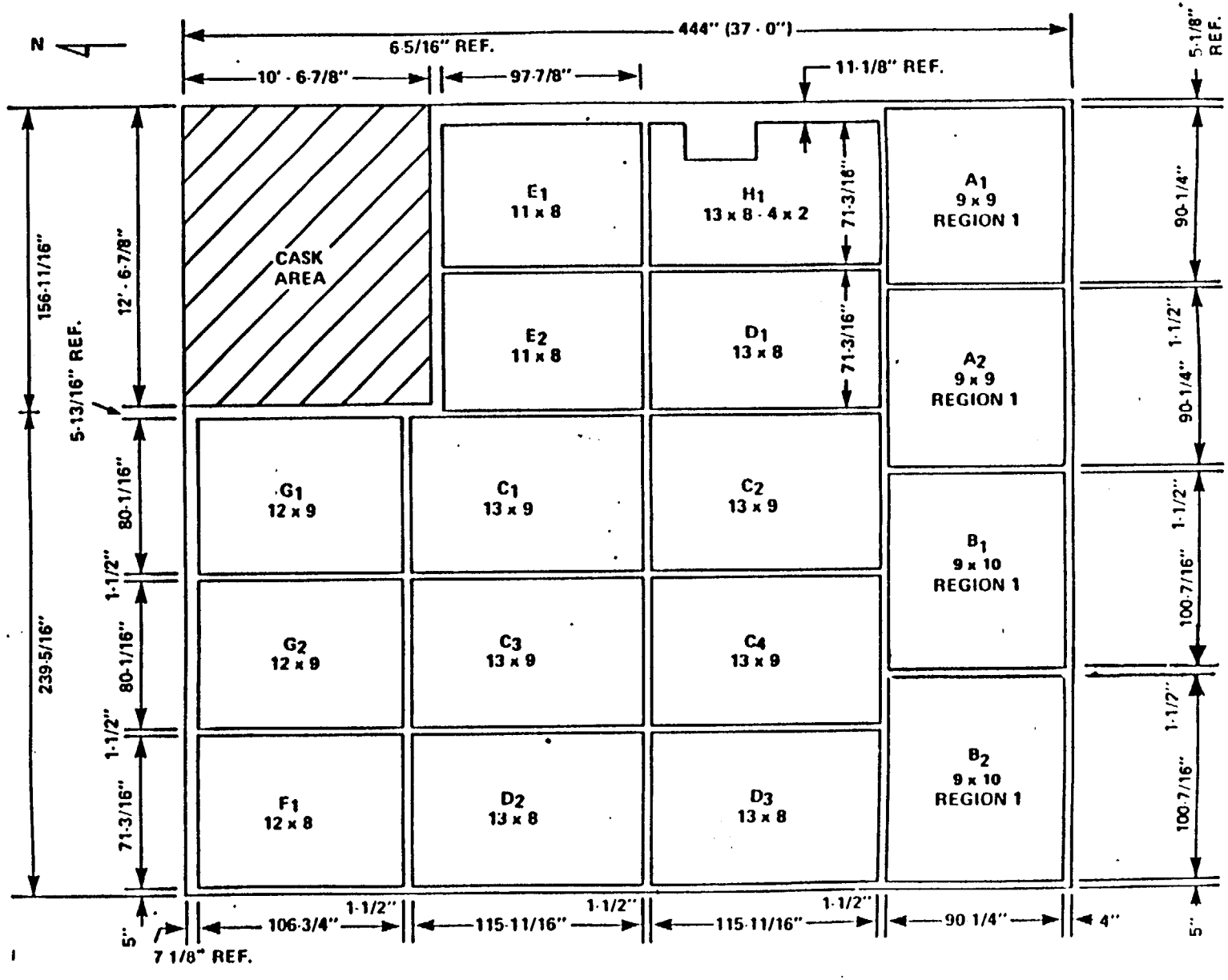

FIGURE 1

SPENT FUEL POOL LAYOUT

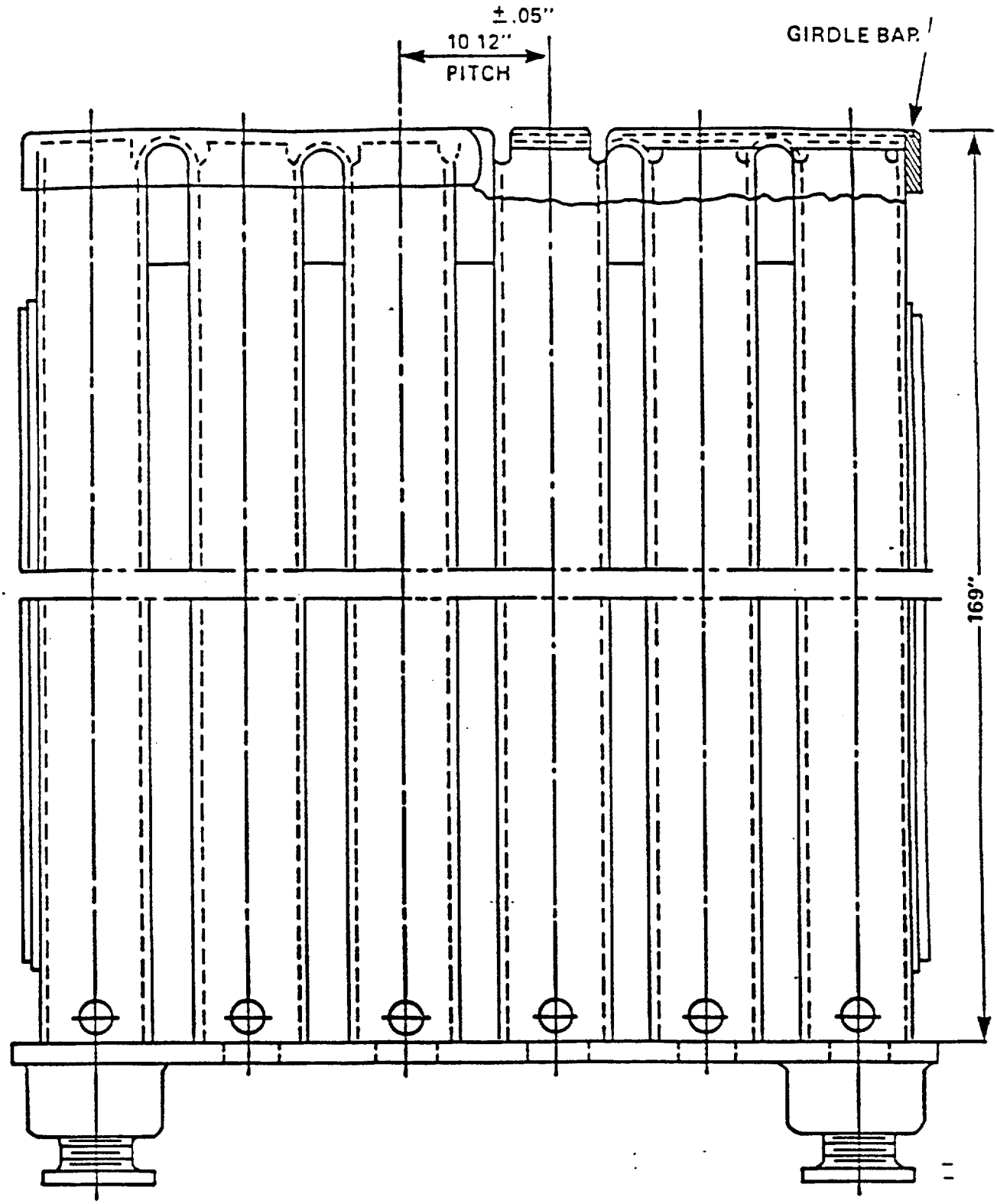

FIGURE 2

TYPICAL RACK ELEVATION

REGION 1

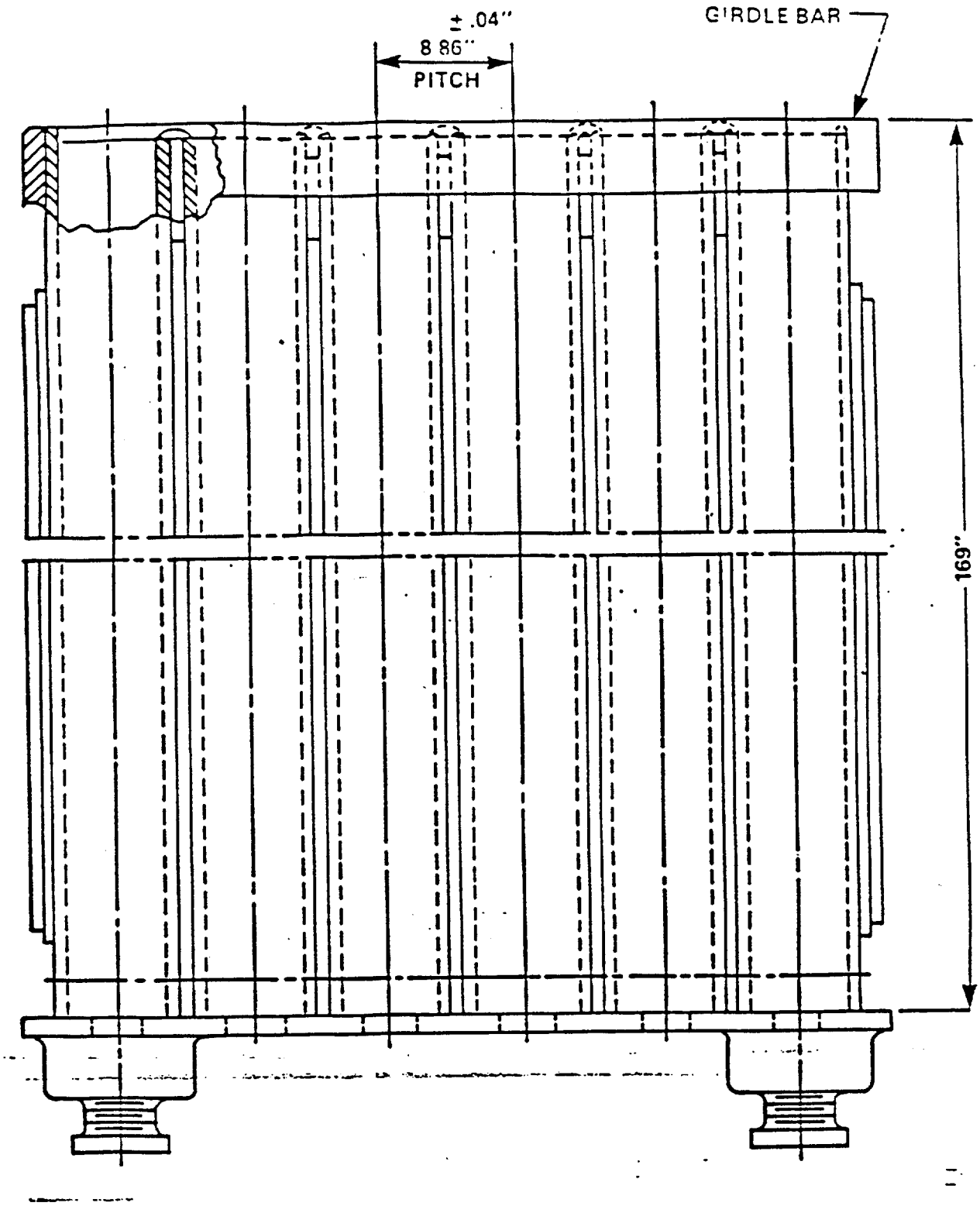

FIGURE 3

TYPICAL RACK ELEVATION

REGION 2

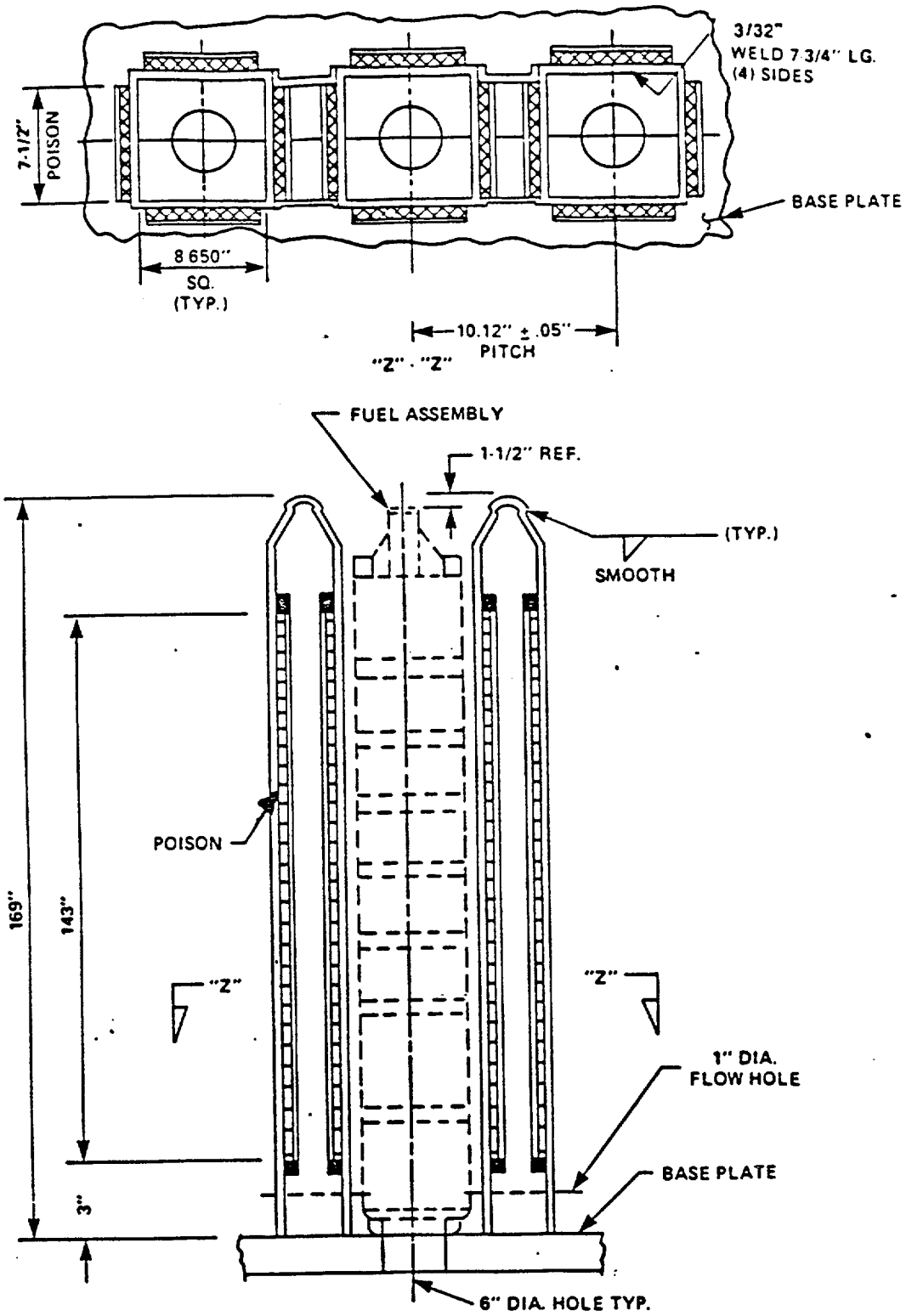

FIGURE 4

TYPICAL CELL ELEVATION

REGION 1

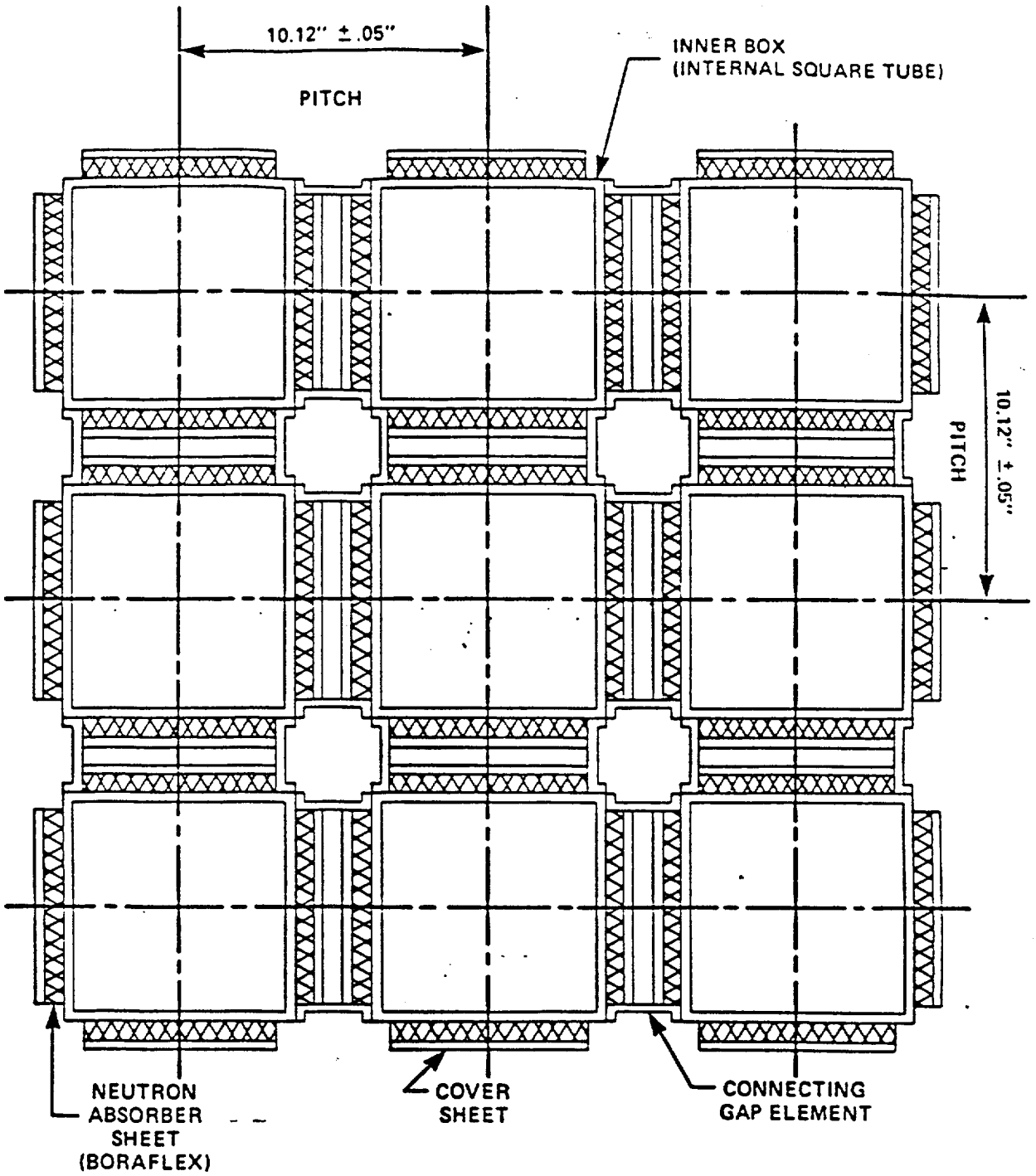

FIGURE 5

3 x 3 TYPICAL ARRAY

REGION 1

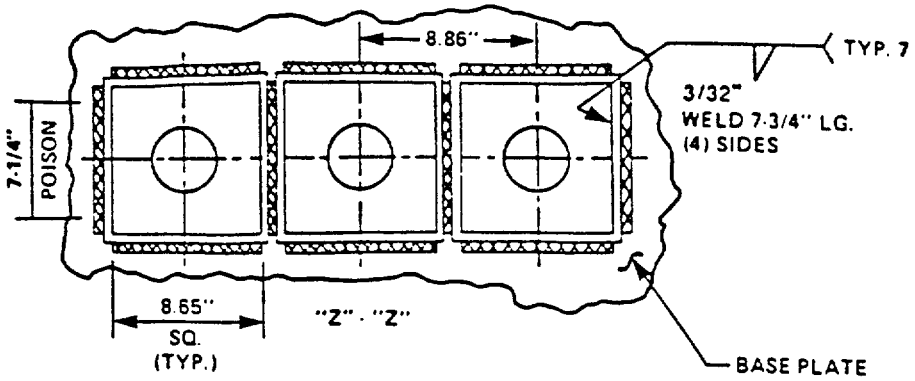

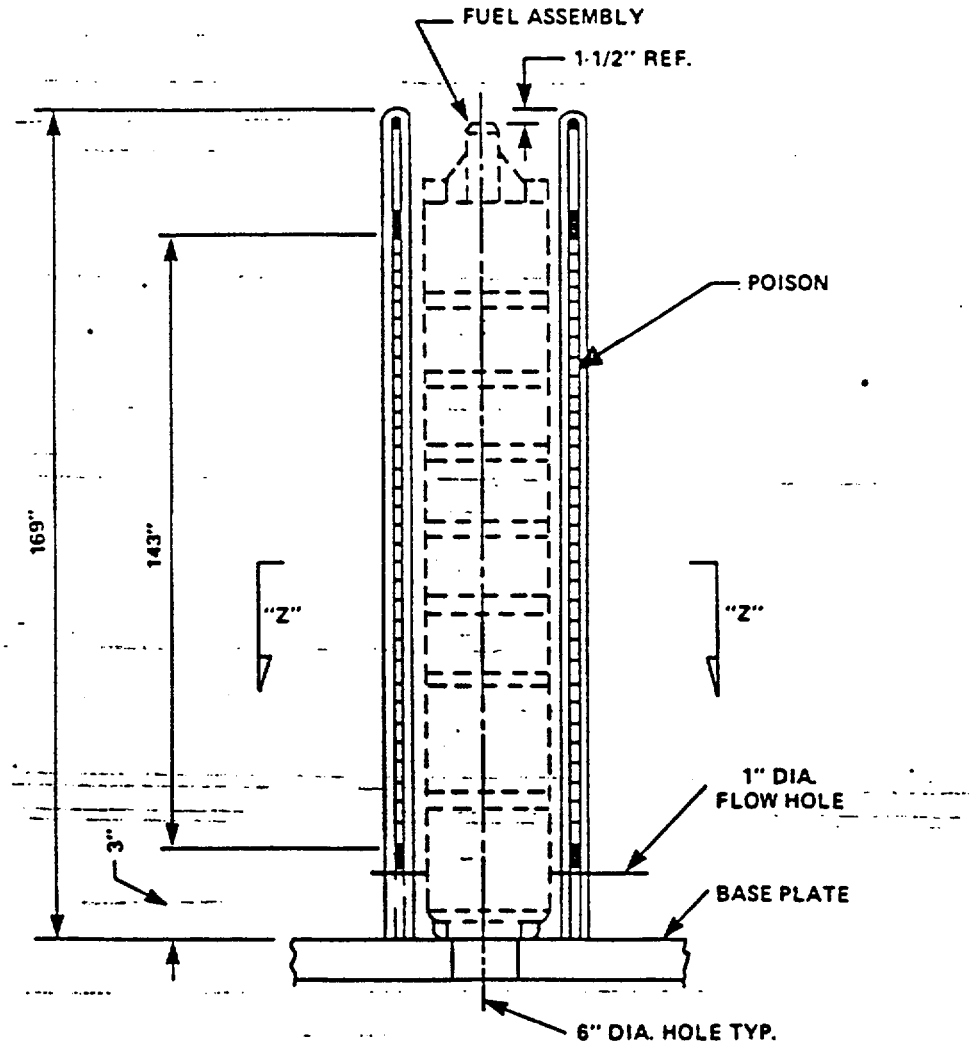

FIGURE 6

TYPICAL CELL ELEVATION

REGION 2

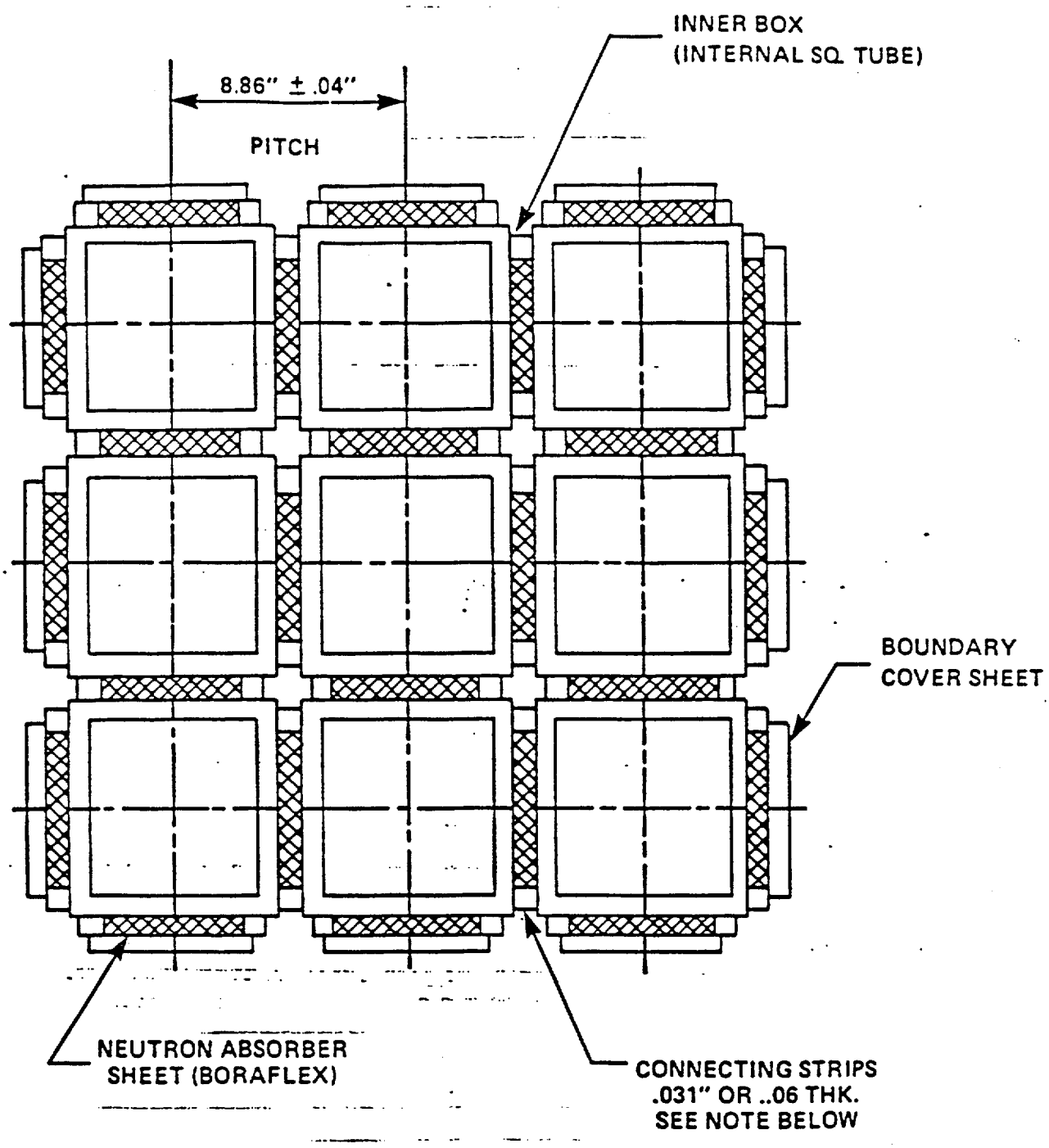

NOTE: CONNECTING STRIPS VARY IN THICKNESS FROM .031" TO .06" RESULTING IN AVERAGE WALL TO WALL SEPARATION OF .046" IN AS-WELDED CONDITION

FIGURE 7

3 x 3 TYPICAL ARRAY

REGION 2

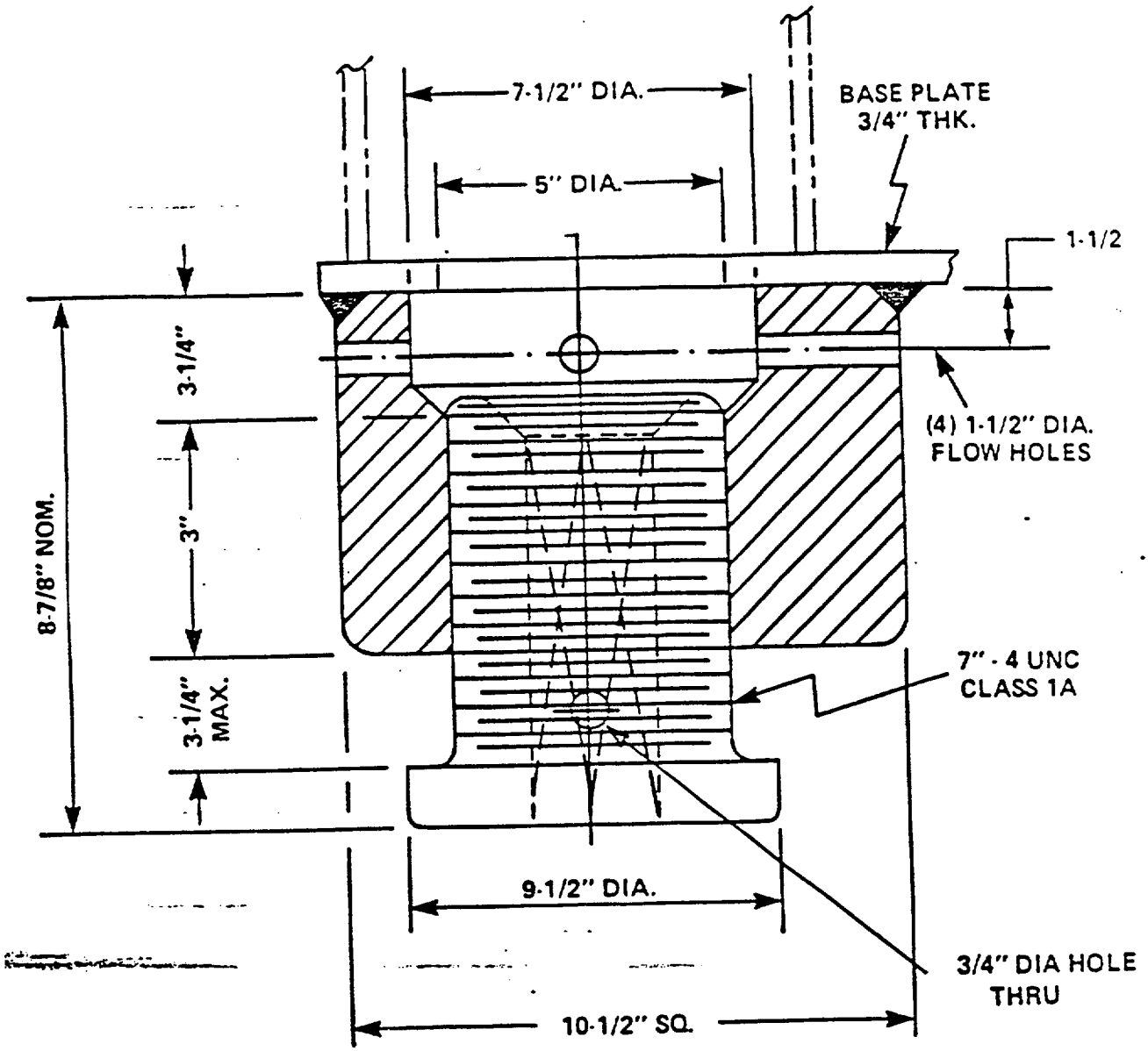

FIGURE 8

ADJUSTABLE SUPPORT LEG

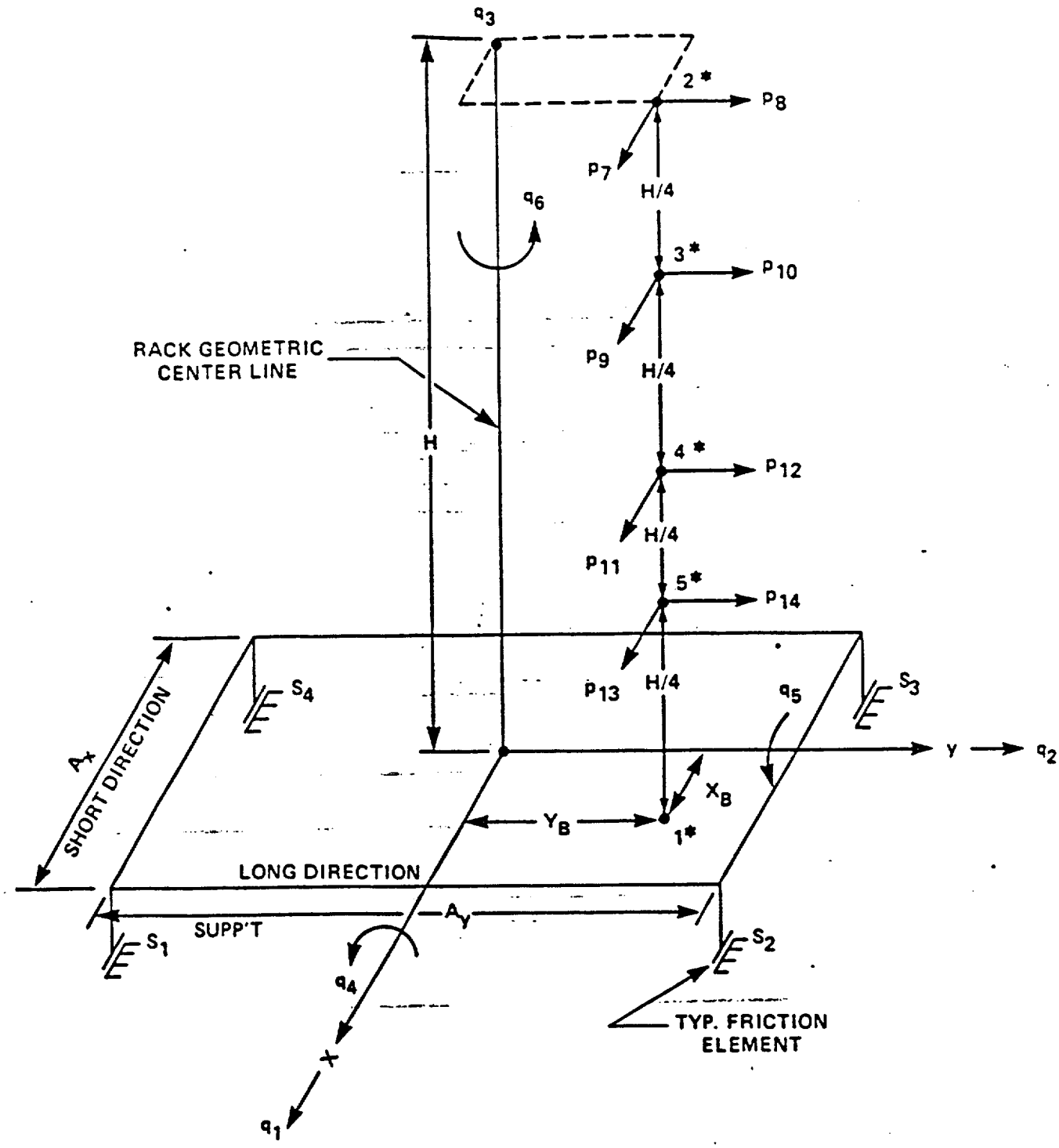

FIGURE 9

SCHEMATIC MODEL

OF FUEL RACK

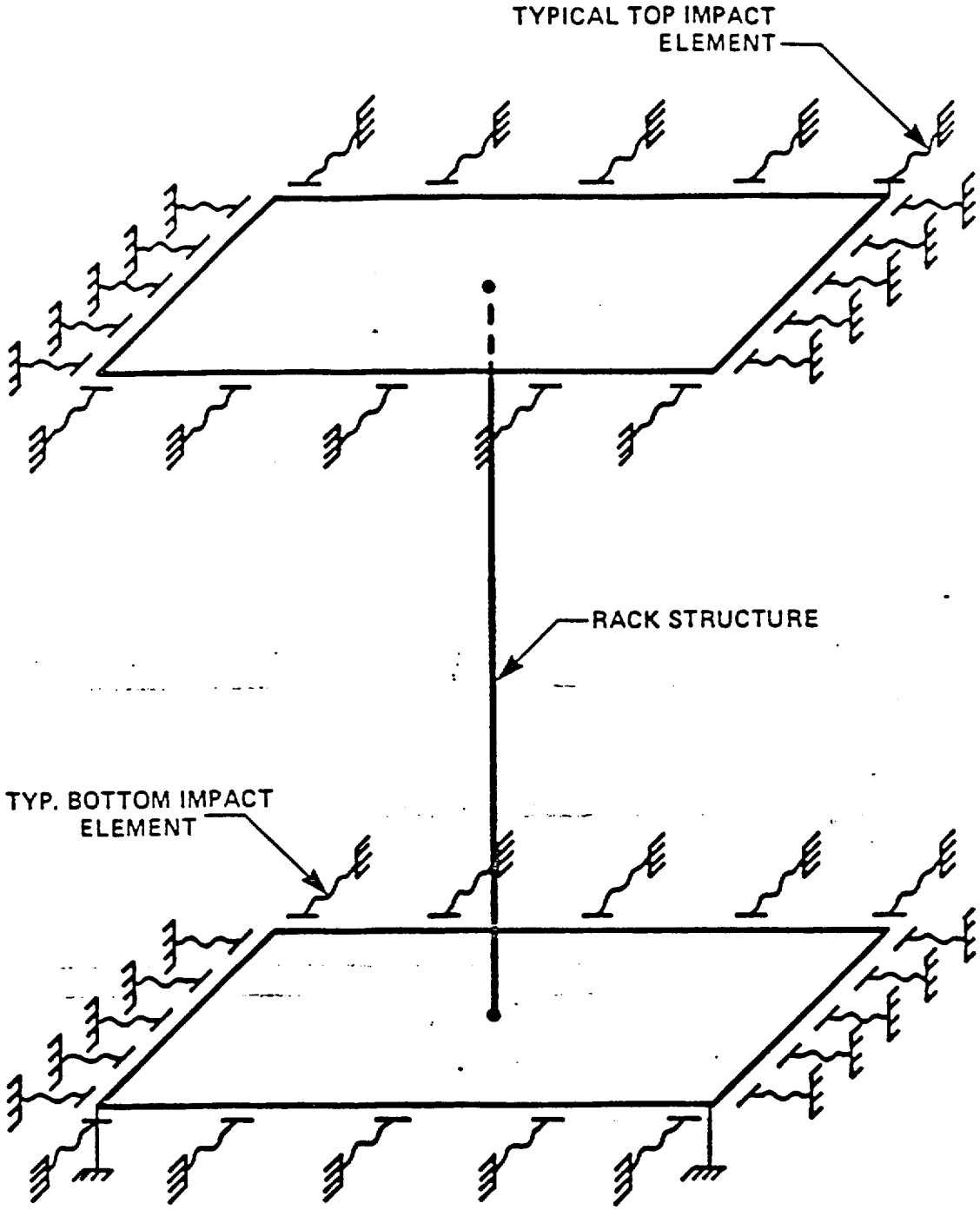

FIGURE 10

FUEL RACK MODEL SHOWING

RACK-TO-RACK IMPACT SPRINGS

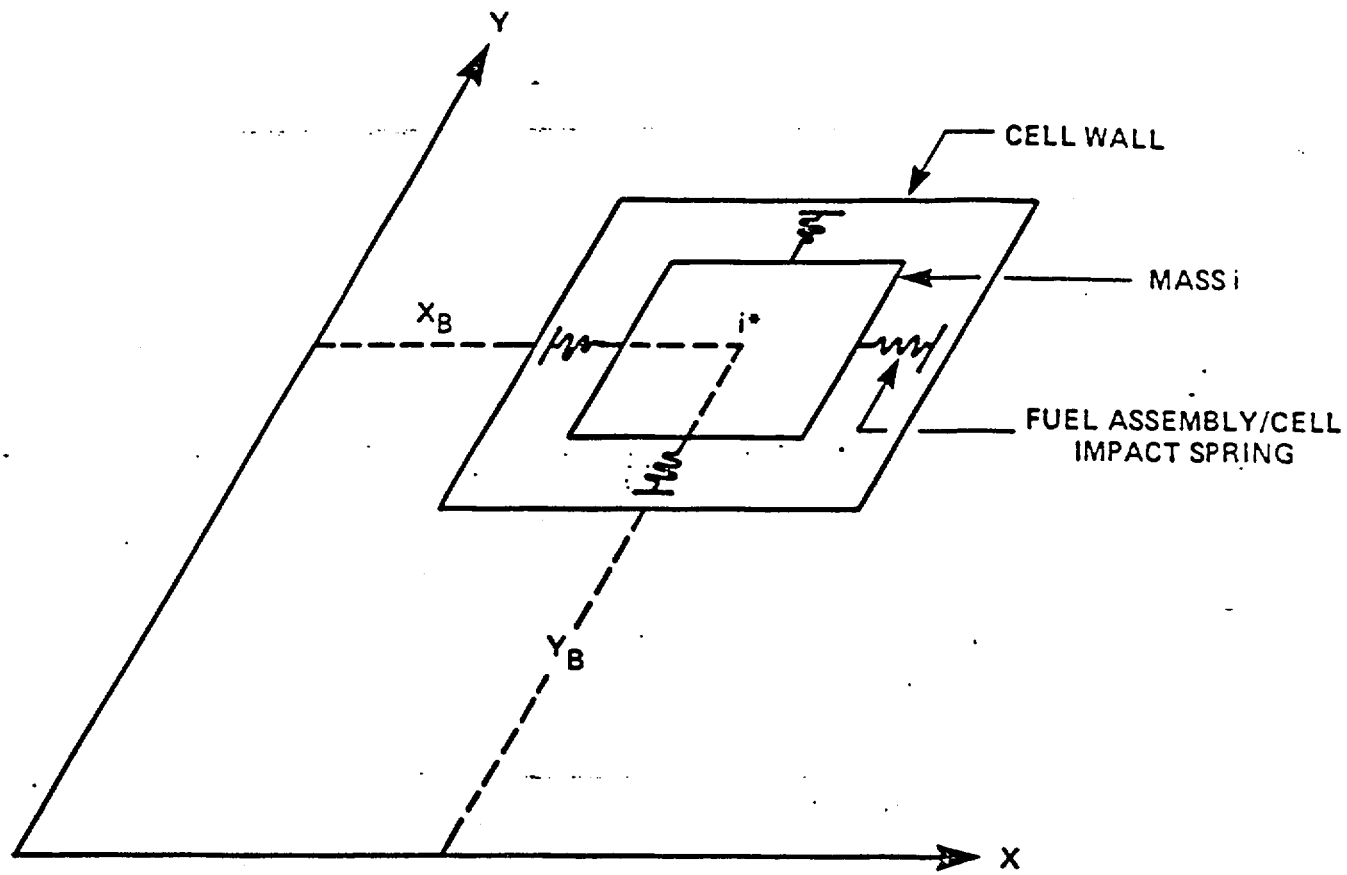

FIGURE 11

IMPACT SPRING ARRANGEMENT

AT NODE i

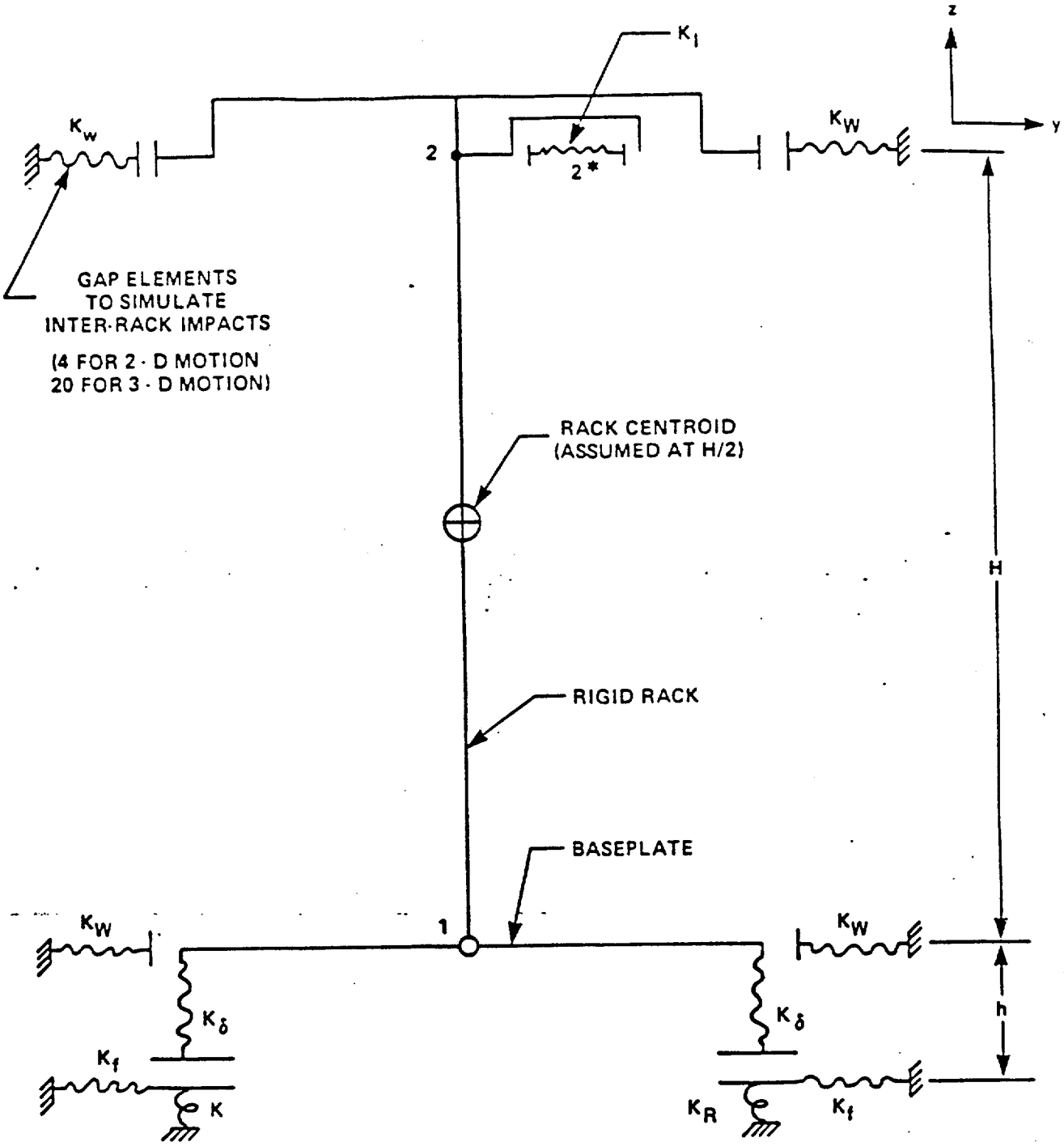

FIGURE 12

SPRING MASS SIMULATION FOR

TWO-DIMENSIONAL MOTION

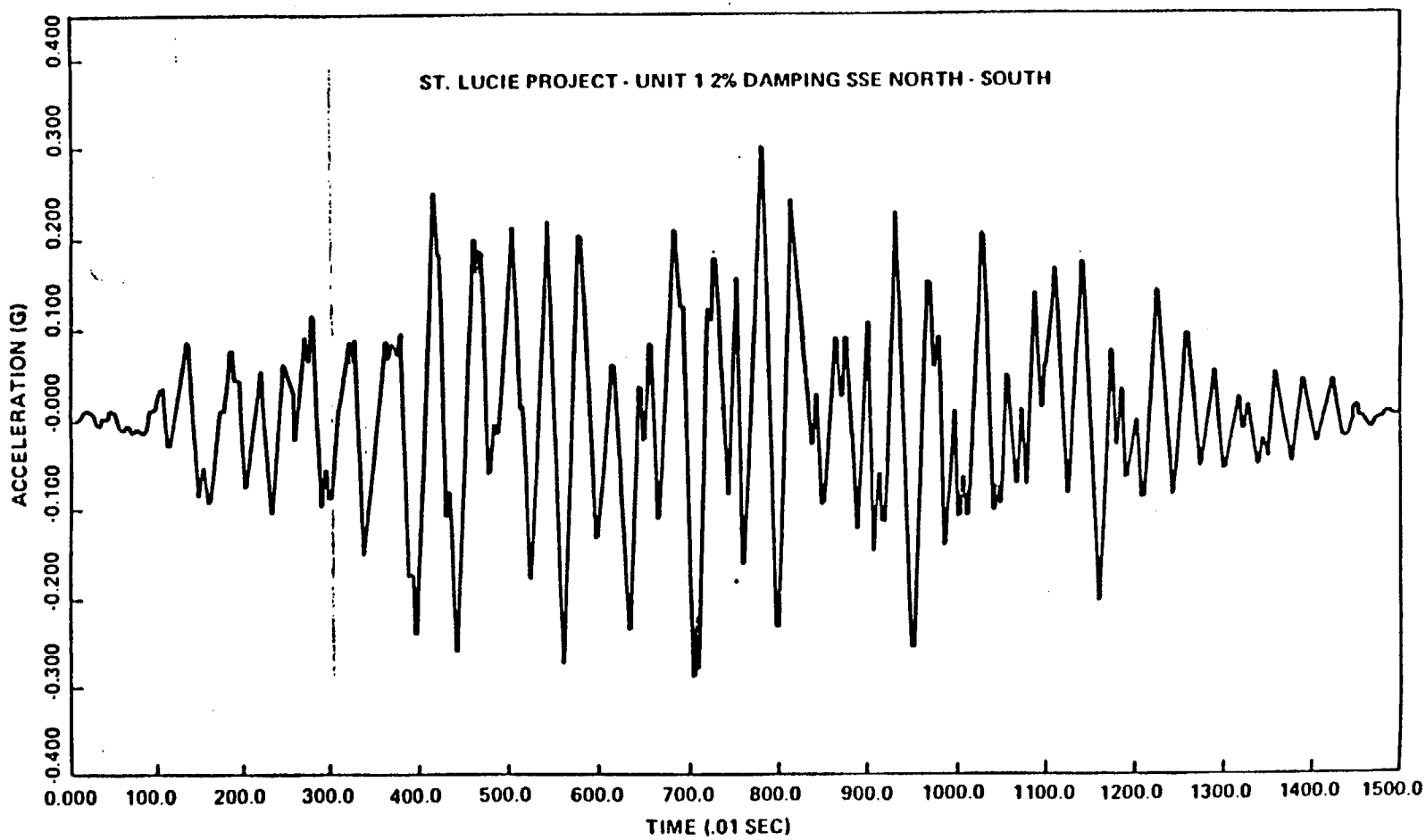

FIGURE 13

NORTH - SOUTH SSE

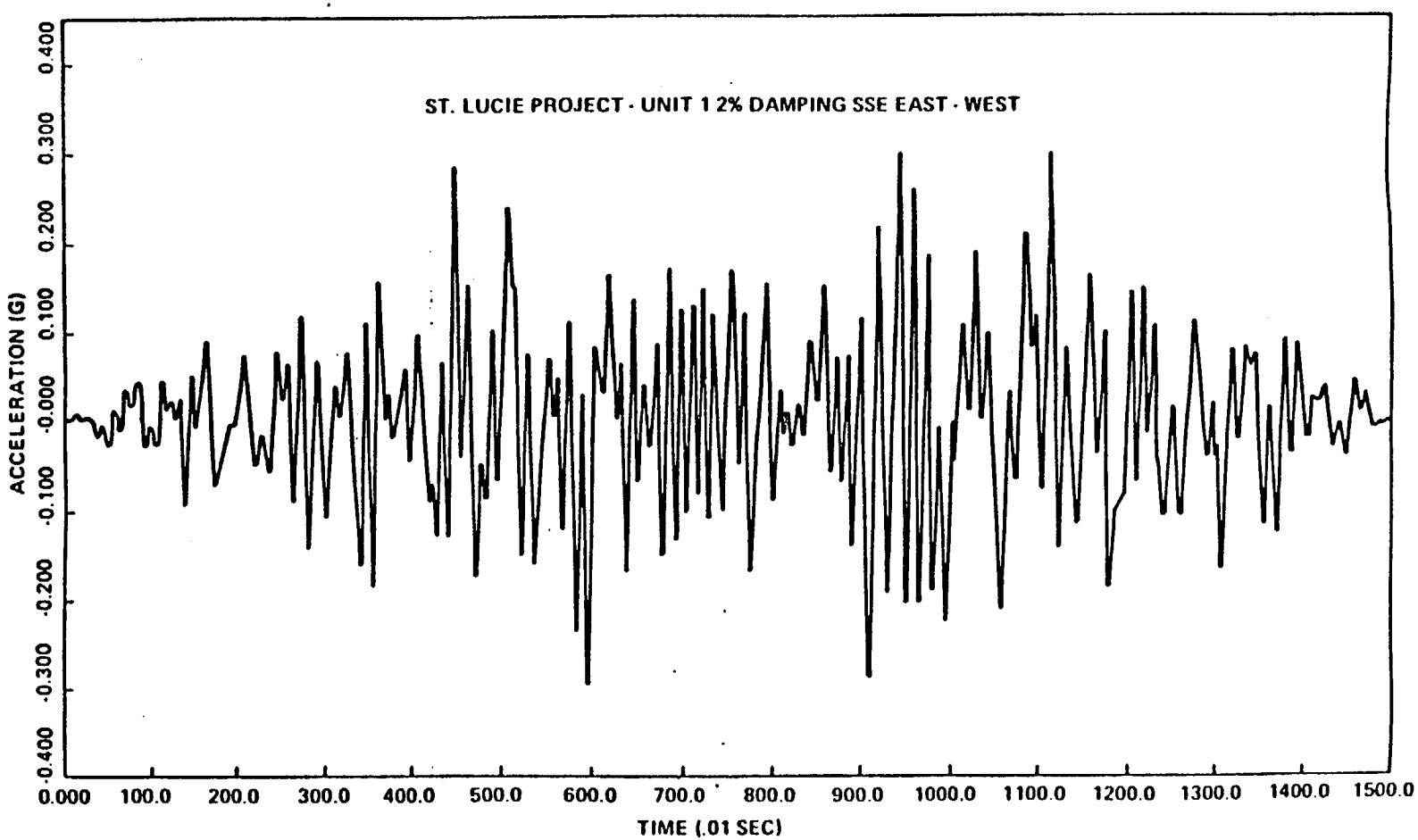

FIGURE 14

EAST - WEST SSE

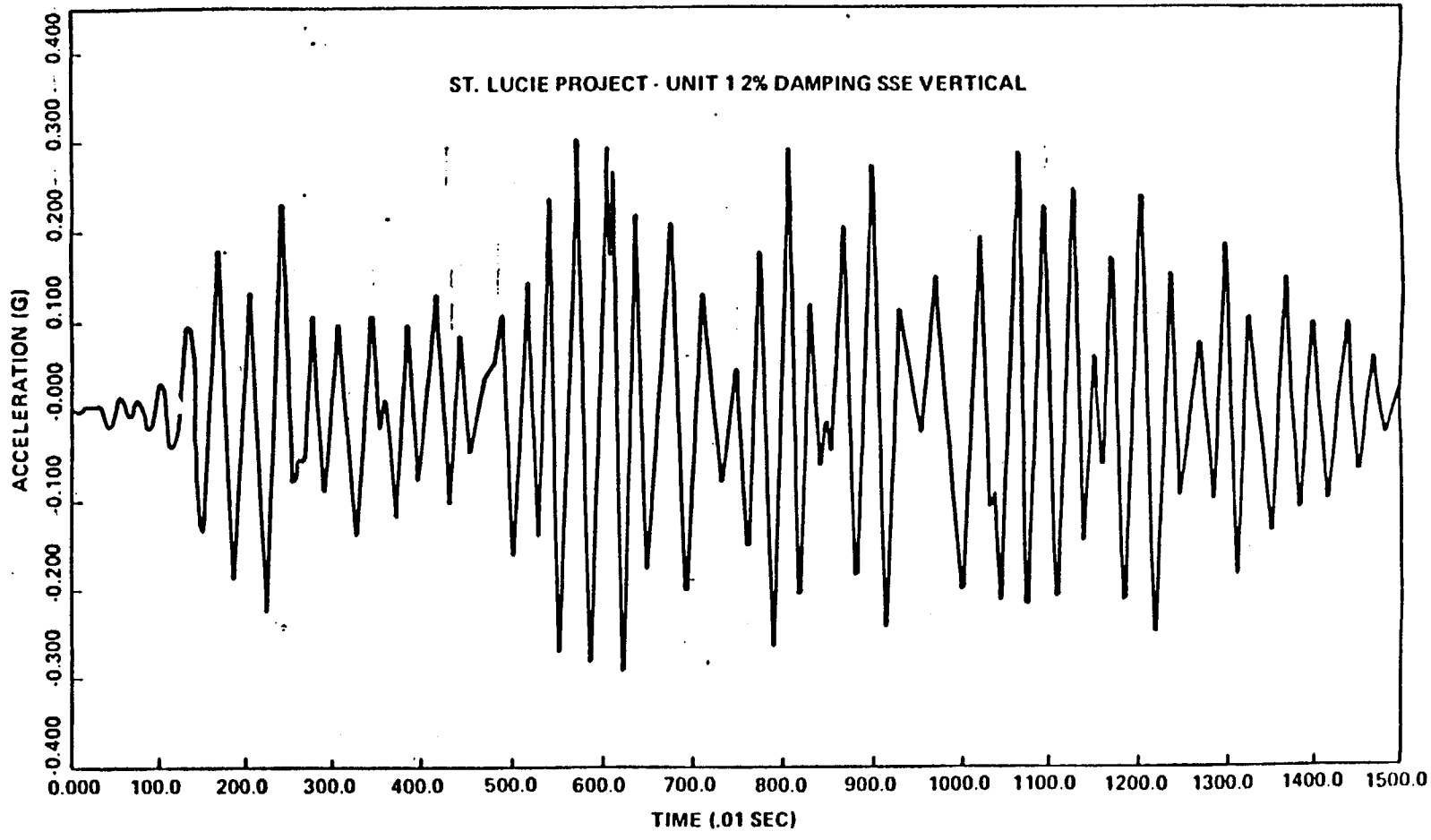

FIGURE 15
VERTICAL SSE

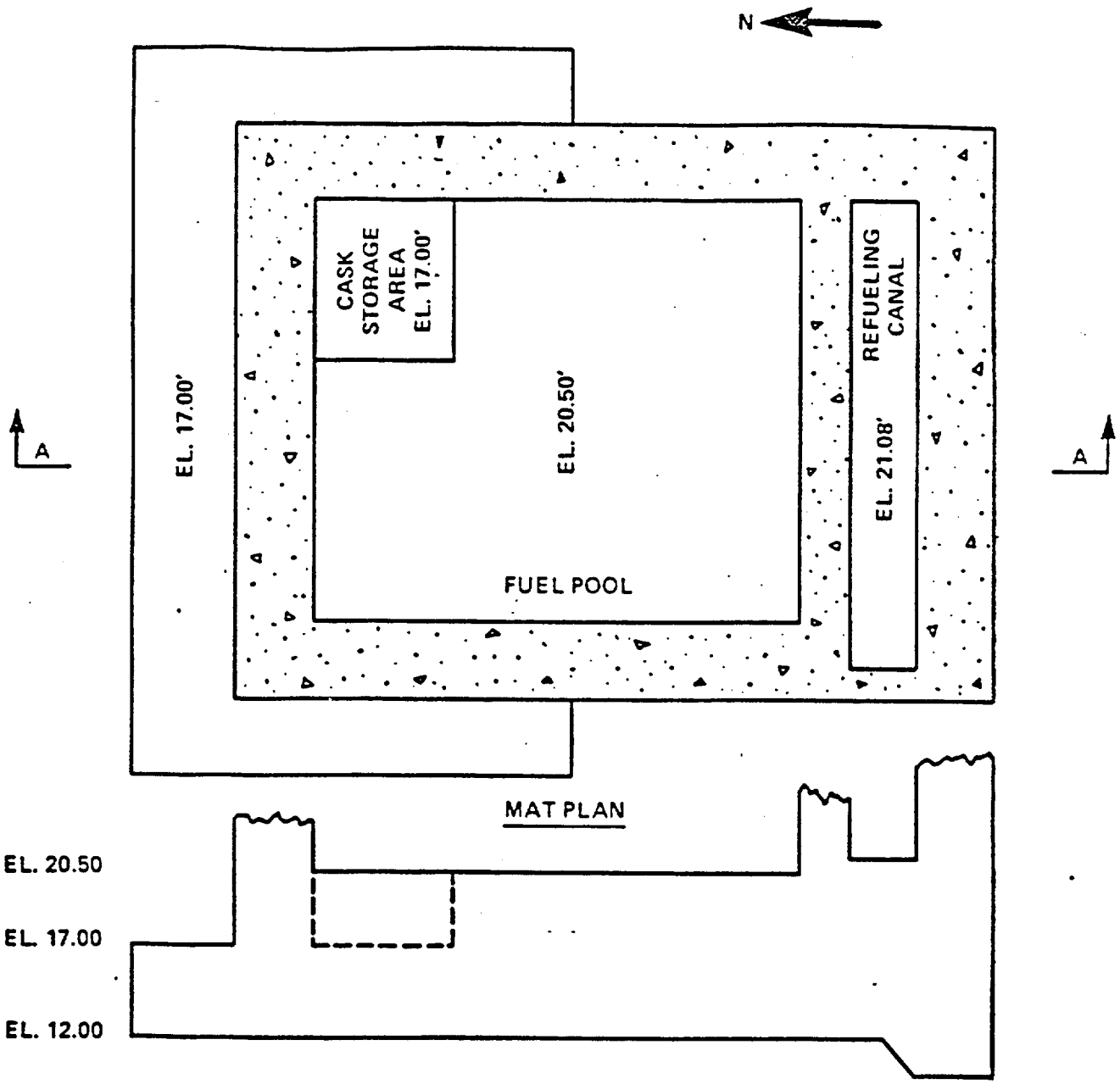

SECTION A-A

FIGURE 16

SPENT FUEL POOL

MAT PLAN AND SECTION

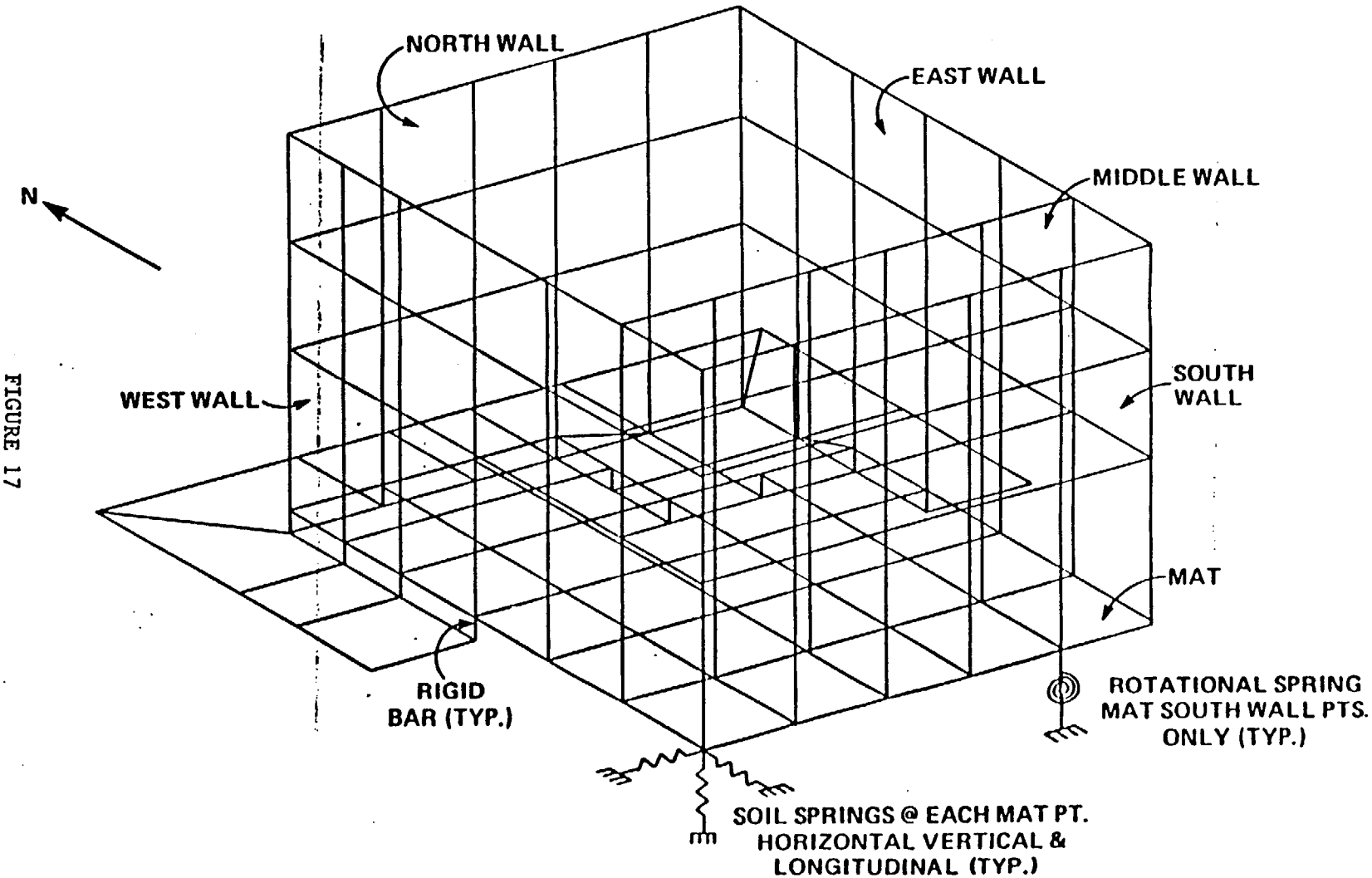

FIGURE 17

SPENT FUEL POOL

MODEL OVERALL VIEW