UNITED STATES
NUCLEAR REGULATORY COMMISSION
OFFICE OF NUCLEAR REACTOR REGULATION
WASHINGTON, D. C. 20555-0001

January 8, 2002

# NRC INFORMATION NOTICE 2002-01: METALCLAD SWITCHGEAR FAILURES AND CONSEQUENT LOSSES OF OFFSITE POWER

## Addressees

All holders of licenses for nuclear power reactors.

## Purpose

The U.S. Nuclear Regulatory Commission (NRC) is issuing this information notice to inform addressees of electrical equipment failure modes and design vulnerabilities identified following recent transients at the San Onofre Nuclear Generating Station and at a foreign nuclear power station. The most interesting aspect in both events was propagation of damage from an electrical fault in one breaker cubicle to other breakers and buswork in the same enclosure. It is expected that recipients will review the information for applicability to their facilities and consider actions, as appropriate, to avoid similar problems. However, suggestions contained in this information notice are not NRC requirements; therefore, no specific actions or written response is required.

## Description of Circumstances

*San Onofre Nuclear Generating Station Event*

On February 3, 2001, the reactor at the San Onofre Nuclear Generating Station, Unit 3 (SONGS-3), was at 39 percent power following a refueling outage. While shifting loads to the unit auxiliary transformers, a fault on a 4.16 kV supply circuit breaker from the unit auxiliary transformer caused a fire and loss of offsite power.

The fault was caused by failure of the 4.16 kV breaker's C phase main contacts to close fully. This resulted in arcing and a production of a thick, dark ionized smoke. The breaker was a Brown Bovari Type HK three pole, medium-voltage ac power circuit breaker rated for 3000 amps (continuous) and 350 MVA (interrupting). The breaker was approximately 25 years old and had its last preventive maintenance performed in 1997. Due to the extensive fire damage, the cause of the breaker's failure to close could not be definitively established.

Offsite power was lost when ionized smoke (which is conductive) diffused through holes (through which wires passed) and conduits between adjacent cubicles. This shorted the energized incoming terminals of the offsite power supply from the reserve auxiliary transformer.

**ML013540193**

The fault blew open the cubicle door of the offsite supply circuit breaker and blew off an insulating boot that covered the A phase bus bar. The high voltage supply breakers upstream of the reserve auxiliary transformer opened to clear the fault. This interrupted non-vital offsite power to the unit.

As a consequence of the loss of offsite power, neither turbine ac lube oil pump started. Failure of the ac pumps to start should have initiated an automatic start of the backup emergency dc turbine lube oil pump; however, the backup dc pump failed to start. This failure to start was caused by a defect in the trip setting device of the dc lube oil pump's power supply breaker. The breaker's trip setting device (a mechanical device that maintains spring tension and thus the breaker's trip setting) was found damaged and incapable of maintaining spring tension and thus the trip setting. The dc pump supply breaker is a 250 volt dc General Electric molded case circuit breaker, Type TBC 400. The dc pump failure led to extensive damage to the unit main turbine, generator and exciter resulting from inadequate lubrication.

*Foreign Nuclear Power Station Event*

On March 18, 2001, at a foreign PWR, a fault in a 4.16 kV load center caused a fire and loss of offsite power while the reactor was shutdown but with significant decay heat. This, combined with a subsequent independent failure in the onsite standby power supply, resulted in a station blackout (i.e., a loss of ac power to both redundant safety systems). Recovery from the event was further complicated by smoke and dependence on ac powered emergency lighting and ventilation.

This foreign plant is a PWR in commercial operation since the mid 1980s. Offsite power is provided by two independent circuits from the transmission network (see Attachment 1). The circuit from the 345 kV transmission network is the normal source of offsite power to each of the two redundant 4.16 kV safety-related trains. The circuit from 161 kV transmission network provides a backup offsite source to each train.

For several days prior to the event, foggy, misty weather had caused salt deposition on the insulators on the 345 kV transmission system and consequent power fluctuations and interruptions. On March 17, the day prior to the failure, the 345 kV transmission system had been interrupted, resulting in an automatic reactor shutdown and transfer to the backup 161 kV offsite source. On March 18, with the reactor shutdown and with off-site power being supplied to the unit from the 161 kV backup source, the 345 kV source was recovered and the circuit into the plant re-energized.

After the switchyard 345 kV circuit breaker was closed (energizing the 345/4.16 kV transformer and the 4.16 kV circuits into the vital load centers while the 4.16 kV supply breakers were still open), a fault occurred in the A train 4.16 kV load center. The fault was caused by insulator failure on one phase of the A train 4.16 kV safety-related switchgear on the supply side of the supply breaker from the 345/4.16 kV transformer. The cause of the insulator failure is unknown. The resulting fault de-energized the 345 kV offsite source to both the A and B 4.16 kV safety-related switchgear. The fault also produced voluminous smoke and ionized gas. Migration of the smoke through the A train 4.16 kV switchgear enclosure resulted in multiple arcing faults. One of these faults, apparently on the supply side of supply breaker from the 161 kV source caused loss of the 161 kV supply to both the A and B trains. Both trains were

affected because they share a common feeder cable downstream of the step-down transformer from the 161 kV system. Another fault in the internal bus-work of the switchgear caused the A train EDG supply breaker to trip after the EDG started and came to rated voltage.

These faults resulted in unavailability of power to A train safety systems from either the “A” train onsite emergency diesel generator or from either the 345 kV or the 161 kV offsite sources. The faults inside the A train load center on the supply side of each of the offsite source circuits tripped and locked out the high voltage supply breakers for both the 345 and 161 kV circuits and prevented the connection of offsite power to the B train safety systems as well.

The B train onsite emergency diesel generator failed independently. The diesel generator failed to achieve normal voltage due to a failure in its excitation circuit. Further local starting attempts were prevented by heavy smoke from the burning insulation in the A load center. The heavy smoke could not be cleared from the corridors because of lack of ac power to operate either normal ventilation or emergency blowers; also only very limited emergency lighting was available in that area.

The remaining ac power supply (a station blackout diesel generator capable of being connected to either of the two trains) was started but tripped on low lube oil pressure. It was later determined that the blackout diesel had tripped because the loss of offsite power interrupted power to the engine’s keep-warm system.

All primary injection systems were unavailable due to the loss of ac power. The steam-driven auxiliary feed pump provided sufficient cooling for the primary system. The blackout diesel was eventually restarted and the B train was energized about two hours after the event and the plant was stabilized.

**Discussion**

These electrical events provide insight into possible collateral damage and cascading failures resulting from a single electrical failure and consequent challenges to plant operation. At SONGS-3, the event originated with the failure of a single non-safety-related 4.16 kV switchgear supply breaker. Smoke from the event propagated causing loss of offsite power to other non-safety-related equipment and partial loss of offsite power to safety-related equipment. The loss of offsite power resulted in the need for dc backup power to operate the non-safety-related turbine lube oil pump. The failure of the dc supply breaker for the lube oil pump resulted in significant damage to the main turbine.

At the foreign plant, the event was caused by a single failure of an insulator on the offsite supply cable to one train of 4.16 kV safety-related switchgear. Smoke from the event spread, causing multiple failures in the switchgear, loss of both sources of offsite power to both trains, and total loss of power to one safety train. An unrelated failure of the other source of onsite power led to a total loss of power to both trains. In addition, the loss of offsite power disabled the backup station blackout power supply.

An electrical fault occurring in medium voltage switchgear enclosure can cascade, causing collateral damage within the switchgear and consequent loss of multiple circuits. When both safety trains are supplied from the same offsite supply with a common upstream circuit breaker (see Attachment 1), one fault in the supply circuit can disable offsite power to both redundant trains. Operators ought to be aware of such a vulnerability and to have considered means to isolate the faulted feeder if both offsite power sources could be affected by a fault in the feeder circuit.

This information notice requires no specific action or written response. If you have any questions about the information in this notice, please contact one of the technical contacts listed below or the appropriate Office of Nuclear Reactor Regulation (NRR) project manager.

***/RA/***

William D. Beckner, Program Director
Operating Reactor Improvements Program
Division of Regulatory Improvement Programs
Office of Nuclear Reactor Regulation

Technical contacts: Thomas Koshy, NRR
(301) 415-1176
E-mail: txk@nrc.gov

James Lazevnick, NRR
(301) 415-2782
E-mail: jjl@nrc.gov

Attachments:
1. AC Power Distribution System Figure
2. List of Recently Issued NRC Information Notices

An electrical fault occurring in medium voltage switchgear enclosure can cascade, causing collateral damage within the switchgear and consequent loss of multiple circuits. When both safety trains are supplied from the same offsite supply with a common upstream circuit breaker (see the attached figure), one fault in the supply circuit can disable offsite power to both redundant trains. Operators ought to be aware of such a vulnerability and to have considered means to isolate the faulted feeder if both offsite power sources could be affected by a fault in the feeder circuit.

This information notice requires no specific action or written response. If you have any questions about the information in this notice, please contact one of the technical contacts listed below or the appropriate Office of Nuclear Reactor Regulation (NRR) project manager.

***/RA/***

William D. Beckner, Program Director
Operating Reactor Improvements Program
Division of Regulatory Improvement Programs
Office of Nuclear Reactor Regulation

Technical contacts: Thomas Koshy, NRR
(301) 415-1176
E-mail: txk@nrc.gov

James Lazevnick, NRR
(301) 415-2782
E-mail: jjl@nrc.gov

Attachments:
1. AC Power Distribution System Figure
2. List of Recently Issued NRC Information Notices

Distribution
Public
IN Reading File

*See previous concurrences

ADAMS Accession No.:**ML013540193** Template No.: NRR-052

To receive a copy of this document, indicate in the box C=Copy w/o attachment/enclosure E=Copy with attachment/enclosure N = No copy

| OFFICE | REXB | | Tech Editor* | | C:EEIB | | RORP | C | RORP/DRIP | |
|---|---|---|---|---|---|---|---|---|---|---|
| NAME | EGoodwin* | | | | JCalvo* | | TKoshy ***/TK/*** | | WBeckner ***/WDB/*** | |
| DATE | 01/02/02 | | 7 / 31 /01 | | 01/04/02 | | 01/04/02 | | 01/07/02 | |

OFFICIAL RECORD COPY

Attachment 1

**AC Power Distribution System with Y Connection to Safety Buses**

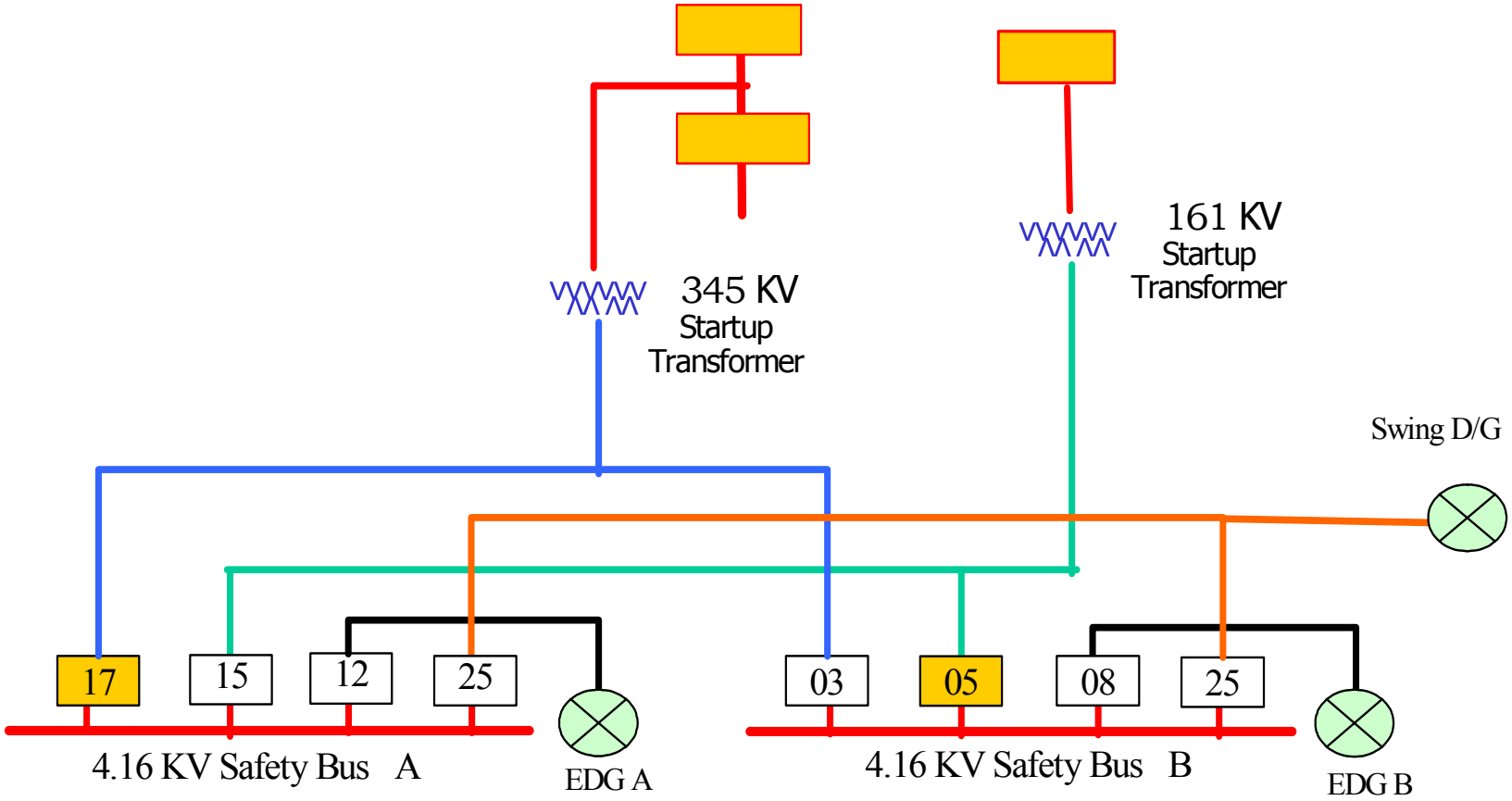

LIST OF RECENTLY ISSUED
NRC INFORMATION NOTICES

| Information Notice No. | Subject | Date of Issuance | Issued to |
|---|---|---|---|
| 2001-19 | Improper Maintenance and Reassembly of Automatic Oil Bubblers | 12/17/2001 | All holders of operating licenses for nuclear power reactors, except those who have permanently ceased operations and have certified that fuel has been permanently removed from the reactor vessel. |
| 2001-18 | Degraded or Failed Automated Electronic Monitoring, Control, Alarming, Response, and Communications Needed for Safety and/or Safeguards | 12/14/2001 | All uranium fuel conversion, enrichment, and fabrication licensees and certificate holders authorized to receive safeguards information. Information notice is not available to the public because it contains safeguards information. |
| 2001-17 | Degraded and Failed Performance of Essential Utilities Needed for Safety and Safeguards | 12/14/2001 | All uranium fuel conversion, enrichment, and fabrication licensees and certificate holders authorized to receive safeguards information. Information notice is not available to the public because it contains safeguards information. |
| 2001-08, Sup. 2 | Update on Radiation Therapy Overexposures in Panama | 11/20/2001 | All medical licensees. |
| 2001-16 | Recent Foreign and Domestic Experience with Degradation of steam Generator Tubes and Internals | 10/31/2001 | All holders of operating licenses for pressurized-water reactors (PWR), except those who have permanently ceased operations and have certified that fuel has been permanently removed from the reactor. |

OL = Operating License
CP = Construction Permit