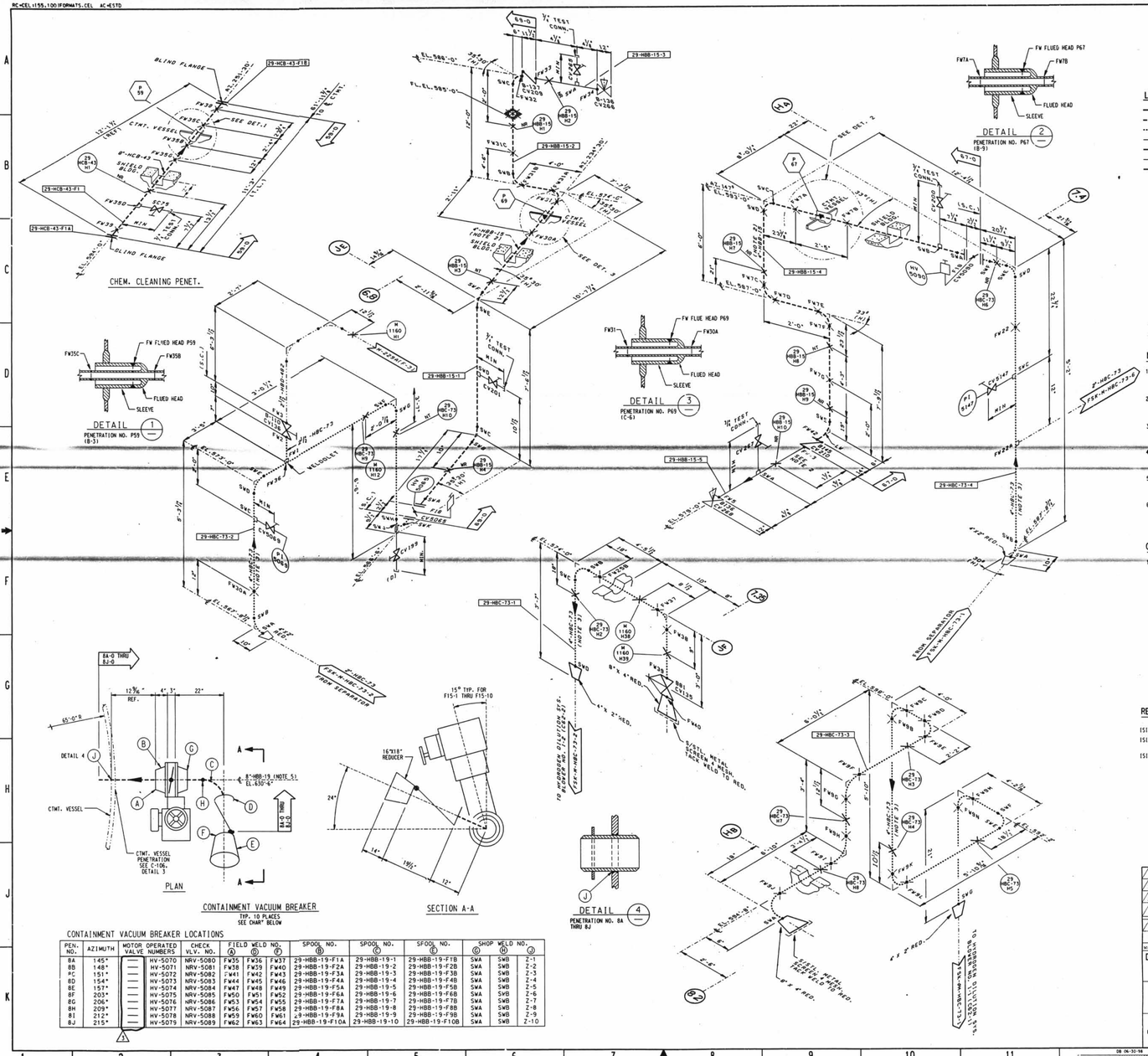

LEGEND

- ASME SECTION XI CLASS 1 PIPING
- ASME SECTION XI CLASS 2 PIPING
- ASME SECTION XI CLASS 3 PIPING
- NON-ISI NUCLEAR CLASS AND HSC CLASS
- PRESSURE BOUNDARY EXTENSION
- REFERENCE & CONTINUITY
- HVAC DUCT

A	ANCHOR
CS	CONSTANT SPRING HANGER
VS	VARIABLE SPRING HANGER
HS	HYDRAULIC SNUBBER
MS	MECHANICAL SNUBBER
N	NON-WELDED SUPPORT ATTACHMENT
W	WELDED INTEGRAL SUPPORT ATTACHMENT
R	RIGID SUPPORT
T	SWAY STRUT
SW	SHOP WELD
FW	FIELD WELD
LW	LONGITUDINAL WELD
WOL	WELDOLET

ISI ITEM NUMBER DESIGNATION USED IN THE FIRST 10 YEAR INSERVICE INSPECTION INTERVAL.

NOTES:

1. MULTIPLE SWAY STRUTS, SPRING SUPPORTS OR SNUBBERS IN A SINGLE PIPING SUPPORT ARE SHOWN BY A NUMBER BEFORE THE SUPPORT TYPE. (EXAMPLE: 2HMS - TWO HYDRAULIC TYPE SNUBBERS THAT ARE NOT WELDED INTEGRAL TO THE PIPE).
2. THE HYDROGEN DILUTION SYSTEM LINE 4"-HBB-15 WELDS AND SUPPORTS ARE EXEMPT FROM INSERVICE EXAMINATION REQUIREMENTS PER IWC 1220. THE WELDS AND SUPPORTS SHOWN MAY NOT REPRESENT THE ACTUAL AS-BUILT CONDITION.
3. THE HYDROGEN DILUTION SYSTEM LINE 4"-HBC-73 WELDS AND SUPPORTS ARE EXEMPT FROM INSERVICE EXAMINATION REQUIREMENTS PER IWD 1220. THE WELDS AND SUPPORTS SHOWN MAY NOT REPRESENT THE ACTUAL AS-BUILT CONDITION.
4. DELETED.
5. THE CONTAINMENT VACUUM BREAKER LINE 8"-HBB-19 WELDS, WITH THE EXCEPTION OF THE WELDS DESIGNATED AS (A), ARE EXEMPT FROM INSERVICE EXAMINATION PER IWC 1220. THE EXEMPT WELDS SHOWN MAY NOT REPRESENT THE ACTUAL AS-BUILT CONDITION.
6. PIPING SYSTEMS ON THIS DRAWING WHICH ARE OUTSIDE OF THE ISI BOUNDARY, ARE SHOWN FOR REFERENCE AND CONTINUITY PURPOSES ONLY. THE CONFIGURATION SHOWN MAY NOT REPRESENT THE ACTUAL AS-BUILT CONDITION.

GENERAL NOTE:

1. DIMENSIONS SHOWN ON THIS DRAWING ARE TO BE USED FOR APPROXIMATE LOCATION ONLY. USE DESIGN DRAWINGS FOR DIMENSIONAL VERIFICATION.

REFERENCE DRAWINGS:

1S102-007A	STEAM GENERATOR SECONDARY SYSTEM
1S102-029B	AUX. BLDG., RADWASTE, FUEL HANDLING AND ACCESS CONTROL AREAS, SH.2
1S102-029D	CONTAINMENT AND PENETRATION ROOMS SHEET 3

D-062

CONTAINMENT VACUUM BREAKER LOCATIONS

PEN. NO.	AZIMUTH	MOTOR OPERATED VALVE NUMBERS	CHECK VLV. NO.	FIELD WELD NO. (A)	(D)	(F)	SPOOL NO. (B)	SPOOL NO. (C)	SPOOL NO. (E)	SHOP WELD NO. (G)	(H)	(J)
8A	145°	—	HV-5070	FW35	FW36	FW37	29-HBB-19-F1A	29-HBB-19-1	29-HBB-19-F1B	SWA	SWB	Z-1
8B	148°	—	HV-5071	FW38	FW39	FW40	29-HBB-19-F2A	29-HBB-19-2	29-HBB-19-F2B	SWA	SWB	Z-2
8C	151°	—	HV-5072	FW41	FW42	FW43	29-HBB-19-F3A	29-HBB-19-3	29-HBB-19-F3B	SWA	SWB	Z-3
8D	154°	—	HV-5073	FW44	FW45	FW46	29-HBB-19-F4A	29-HBB-19-4	29-HBB-19-F4B	SWA	SWB	Z-4
8E	157°	—	HV-5074	FW47	FW48	FW49	29-HBB-19-F5A	29-HBB-19-5	29-HBB-19-F5B	SWA	SWB	Z-5
8F	203°	—	HV-5075	FW50	FW51	FW52	29-HBB-19-F6A	29-HBB-19-6	29-HBB-19-F6B	SWA	SWB	Z-6
8G	206°	—	HV-5076	FW53	FW54	FW55	29-HBB-19-F7A	29-HBB-19-7	29-HBB-19-F7B	SWA	SWB	Z-7
8H	209°	—	HV-5077	FW56	FW57	FW58	29-HBB-19-F8A	29-HBB-19-8	29-HBB-19-F8B	SWA	SWB	Z-8
8I	212°	—	HV-5078	FW59	FW60	FW61	29-HBB-19-F9A	29-HBB-19-9	29-HBB-19-F9B	SWA	SWB	Z-9
8J	215°	—	HV-5079	FW62	FW63	FW64	29-HBB-19-F10A	29-HBB-19-10	29-HBB-19-F10B	SWA	SWB	Z-10

3	5/6/96	INC. DCN ISIM2-229-8 PER IPR 95-0355-TO1	SBW
2	10/6/95	INC. DCN ISIM2-229-5 FOR DCR A 94-0108	"INITIALS ON FILE"
1	4/14/94	INC DCN ISIM2-229-1 FOR DCR 91-0001 & SER UPDATE REVISED OVERALL DIMENSION IN ZONE E-10!	"INITIALS ON FILE"
0	9/13/94	ISSUED FOR SECOND 10 YEAR ISI PROGRAM	"INITIALS ON FILE"

DAVIS-BESSE NUCLEAR POWER STATION
UNIT NO.1
THE TOLEDO EDISON COMPANY

INSERVICE INSPECTION ISOMETRIC
HYDROGEN DILUTION SYSTEM 8
MISC. CONTAINMENT PENETRATIONS
AUXILIARY AND CONTAINMENT BUILDINGS

DRAWING NO. ISIM2-229 (SHEET 1) REV. 3

SB 06-30-98

DRW: /ISIM/ 2IM229 .DGN

LEVELS 1234567890/1234567890/1234567890/1234567890/1234567890/1234567890/1234567890/1234567890

14 34144 E SIZE

PSC= VER.

I CERTIFY THAT THE IMAGE CONTAINED ON THIS FRAME WAS MADE IN THE NORMAL AND REGULAR COURSE OF BUSINESS, DELTA DATA SERVICES