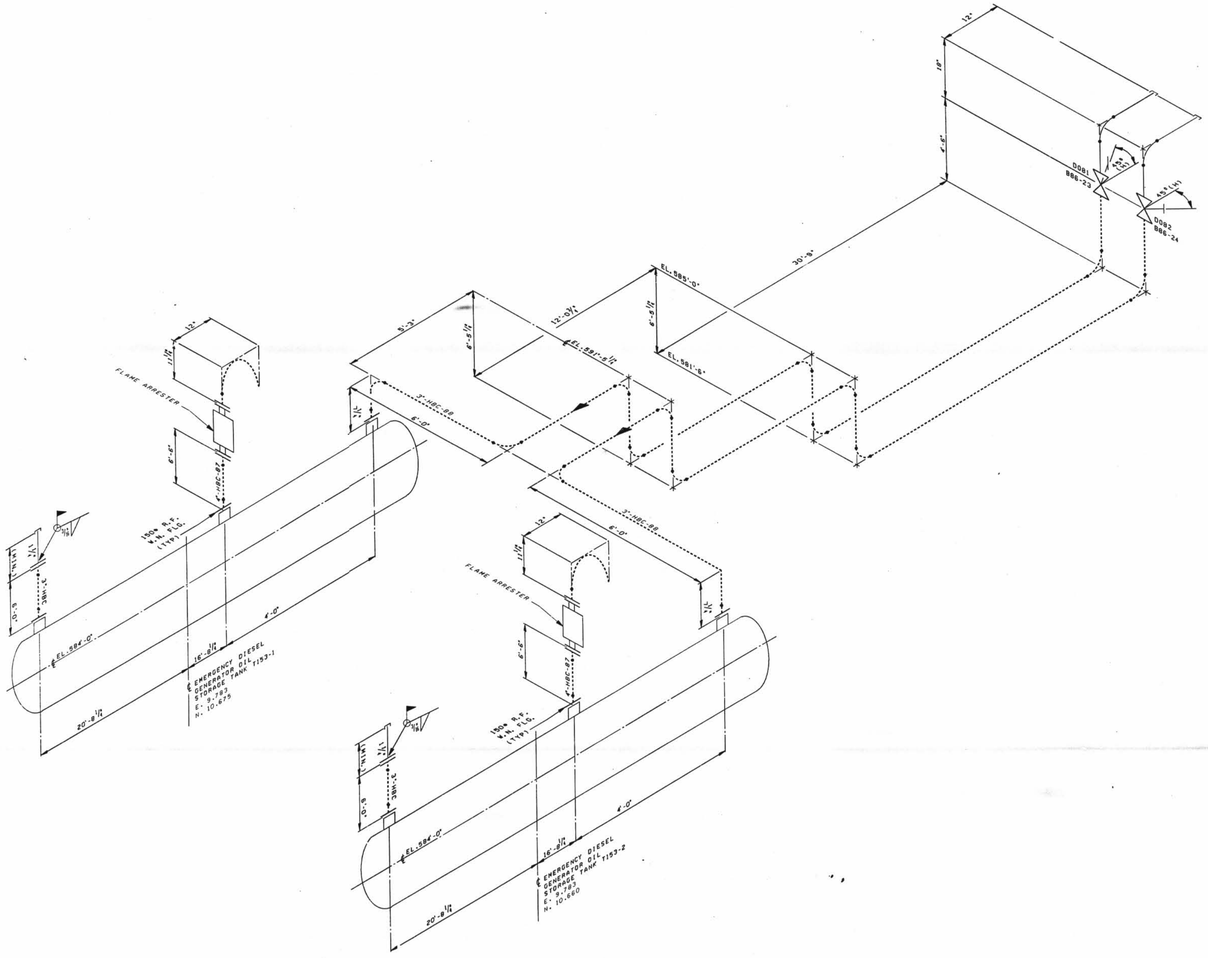

LEGEND

- ASME SECTION XI CLASS 1 PIPING
- ASME SECTION XI CLASS 2 PIPING
- ASME SECTION XI CLASS 3 PIPING
- NON-ISI NUCLEAR CLASS AND HSC CLASS
- PRESSURE BOUNDARY EXTENSION
- REFERENCE & CONTINUITY
- —D—D— HVAC DUCT
- A ANCHOR
- CS CONSTANT SPRING HANGER
- VS VARIABLE SPRING HANGER
- HS HYDRAULIC SNUBBER
- MS MECHANICAL SNUBBER
- N NON-WELDED SUPPORT ATTACHMENT
- W WELDED INTEGRAL SUPPORT ATTACHMENT
- R RIGID SUPPORT
- T SWAY STRUT
- SW SHOP WELD
- FW FIELD WELD
- LW LONGITUDINAL WELD
- WOL WELDOLET
- ISI ITEM NUMBER DESIGNATION USED IN THE FIRST 10 YEAR INSERVICE INSPECTION INTERVAL.

NOTES:

1. THE EDG FUEL OIL LINE 4"-HBC-87 & 3"-HBC-88 WELDS AND SUPPORTS ARE EXEMPT FROM INSERVICE EXAMINATION REQUIREMENTS PER IWD 1220. THE WELDS AND SUPPORTS SHOWN MAY NOT REPRESENT THE ACTUAL AS-BUILT CONDITION.
2. PIPING SYSTEMS ON THIS DRAWING WHICH ARE OUTSIDE OF THE ISI BOUNDARY, ARE SHOWN FOR REFERENCE AND CONTINUITY PURPOSES ONLY. THE CONFIGURATION SHOWN MAY NOT REPRESENT THE ACTUAL AS-BUILT CONDITION.

GENERAL NOTE:

DIMENSIONS SHOWN ON THIS DRAWING ARE TO BE USED FOR APPROXIMATE LOCATION ONLY. USE DESIGN DRAWINGS FOR DIMENSIONAL VERIFICATION.

REFERENCE DRAWINGS:

ISI02-017A DIESEL GENERATORS

D-061

NO.	DATE	REVISIONS	BY	CH'K	ENGR	ENGR SUPV	ENG MGR
1		INC DCN ISIM2-217A-2 FOR DCR 91-0011	JOR				
0	9/17/90	ISSUED FOR SECOND 10 YEAR ISI PROGRAM	CB	EFB	LLC	MCP	ECC

SCALE N.T.S. DESIGNED DRAWN CB DATE

DAVIS-BESSE NUCLEAR POWER STATION
UNIT NO. 1
THE TOLEDO EDISON COMPANY

Q

INSERVICE INSPECTION ISOMETRIC
EMERGENCY DIESEL GENERATORS
FUEL OIL SYSTEM

DRAWING NO. ISIM2-217A (SHEET 2) REV. 1

I CERTIFY THAT THE IMAGE CONTAINED ON THIS FRAME WAS MADE IN THE NORMAL AND REGULAR COURSE OF BUSINESS. ON THE DATE STATED BELOW AND THAT IT IS AN ACCURATE REPRODUCTION OF THE RECORD(S) SUBMITTED TO NUCLEAR RECORDS MANAGEMENT.

DATE 2-5-92 OPERATOR Betty Wiehle 30X