FirstEnergy

Davis-Besse Nuclear Power Station
5501 North State Route 2
Oak Harbor, Ohio 43449-9760

Guy G. Campbell
Vice President - Nuclear

419-321-8588
Fax: 419-321-8337

Docket Number 50-346

License Number NPF-3

Serial Number 2736

November 27, ~~2002~~ 2001

U.S. Nuclear Regulatory Commission
Attention: Document Control Desk
Washington, D.C 20555-0001

Subject: Response to Requests for Additional Information Concerning the Davis-Besse Nuclear Power Station Third Ten-Year Interval Inservice Inspection Program

Ladies and Gentlemen:

The purpose of this letter is to provide additional information to the Nuclear Regulatory Commission (NRC) to facilitate the timely completion of their review of the Third Ten-Year Interval Inservice Inspection Program for the Davis-Besse Nuclear Power Station (DBNPS). On September 19, 2000, the FirstEnergy Nuclear Operating Company (FENOC) submitted, by letter Serial Number 2672, the Third Ten-Year Interval Inservice Inspection Program for the DBNPS. Included within this Program were several relief requests.

On August 6, 2001, the NRC staff provided the DBNPS staff with informal requests for information to be discussed via telephone conversation, which took place on September 26, 2001. In that conversation, and a subsequent conversation on October 9, 2001, the DBNPS provided additional information and agreed to formally submit this information. Furthermore,, to support an efficient review, the DBNPS is providing an additional set of drawings as were transmitted with letter Serial Number 2672 (and listed in Attachment 10 to this letter), and a cross-reference table of the Third Ten-Year Interval relief requests to corresponding previously approved Second Ten-Year Interval relief requests (included as Attachment 1).

With the submittal of this information, the DBNPS requests completion of the NRC staff's review of the Third Ten-Year Interval Inservice Inspection Program by December 31, 2001.

A047

If you have any questions or require additional information, please contact Mr. David H. Lockwood, Manager, Regulatory Affairs, at (419) 321-8450.

Very truly yours,

for Guy Campbell

RMC/s

Attachments

cc: J. E. Dyer, Regional Administrator, NRC Region III (w/o Attachment 10 drawings)
D. V. Pickett, DB-1 Backup NRC/NRR Project Manager (w/o Attachment 10 drawings)
S. P. Sands, DB-1 NRC/NRR Project Manager
D. S. Simpkins, DB-1 Acting Senior Resident Inspector (w/o Attachment 10 drawings)
Utility Radiological Safety Board (w/o Attachment 10 drawings)

Cross-Reference Table for Third Ten-Year Interval ISI Program Relief Requests and Corresponding Second Ten-Year Interval ISI Program Relief Requests

3rd Ten-Year Interval Relief Request	Corresponding 2nd Ten-Year Interval Relief Request and TAC Number
RR-A1	RR-A1, TAC Nos. M79034 and M77942
RR-A2	RR-A2, TAC Nos. M79034 and M77942
RR-A3	Code Case 616, Arkansas Nuclear One TAC Nos MB0665 and MB-0694; DBNPS RR-A7 (insulation removal) TAC Nos. M79034 and M77942
RR-A5	RR-A11, TAC No. M93310
RR-A6	RR-A16, TAC No. MA4549
RR-A7	RR-A18, TAC No. MA7210
RR-B1	RR-B1, TAC Nos. M79034 and M77942
RR-B2	RR-B4, TAC No. M87188
RR-B3	RR-B7, TAC No. M93310

Note: The 2nd Ten-Year Interval ISI Program was primarily based on Section XI of the 1986 Edition of the ASME Boiler and Pressure Vessel Code. The 3rd Ten-Year Interval ISI Program is based on the 1995 Edition and Addenda through the 1996 Addenda.

Response to Request for Additional Information Concerning
The Davis-Besse Nuclear Power Station Third Ten-Year Interval
Inservice Inspection Program

RAI 2.1 Request for Relief No. RR-A1 – Pursuant to 10 CFR 50.55(a)(3)(i), the licensee requested the required surface examination for the reactor vessel inlet and outlet nozzles to pipe welds and the reactor vessel nozzle to core flood safe end welds be replace[d] with an ultrasonic examination from the ID which is capable of detecting opposite side surface flaws.

The proposed alternative examination has been proven capable of detecting flaws originating from the outside surface of the piping. The license states that Performance Demonstration Initiative (PDI) will include the examination of piping from the inside surface as part of the qualification process for Supplement 12 of Appendix VIII. In order for the proposed alternative to be acceptable, please provide the following:

1) It is stated in the basis of this relief request that the Performance Demonstration Initiative (PDI) does not address the examination of piping welds from the inside surface. It is the licensee's understanding that PDI will include the examination of piping from the inside surface as part of the qualification process for Supplement 12, Requirements for the Coordinated Implementation of Selected Aspects of Supplements 2, 3, 10, and 11, of Appendix VIII. Supplement 12 of Appendix VIII is required by 10 CFR 50.55a to be implemented by November 2002. Once Supplement 12 is implemented, the examination process used at Davis-Besse for examining the piping welds from the inside surface will be qualified in accordance with the PDI requirements. What is the alternative, if PDI is not capable of qualifying piping examinations from the inside surface?

RESPONSE

If PDI is unsuccessful in qualifying piping examinations from the inside surface, the Davis-Besse Nuclear Power Station (DBNPS) will use the examination technique described in the relief request to perform the examinations. This examination technique was approved for the second interval (Relief Request RR-A1 in the second interval) via TACs M79034 and M77942.

RAI 2.2 Request for Relief No. RR-A2 – Pursuant to 10 CFR 50.55a(a)(3)(i), the licensee requested that the Code-required 100% volumetric examination for the Reactor Vessel Head-to-Flange weld be replaced with an examination along the weld axis in 2 directions, and a perpendicular examination along the weld axis in only one direction. The proposed alternative, in conjunction with the required surface examination, has

been proved to be capable of detecting flaws in the Head-to-Flange weld. In order for the proposed alternative to be acceptable, please provide the following:

(1) The licensee has discussed design limitations that involve the transition curvature of the head base material relative to the flange and the positioning of the three lifting lugs as the main reasons for requesting relief from the Code required volumetric examination. The licensee states that because of these limitations, approximately 80% of the weld will be examined volumetrically. Provide drawings or sketches to illustrate these limitations. Also, provide drawing ISI-SK-002 which has been referenced in the basis section.

RAI 2.4 Request for Relief No. RR-A5 – Pursuant to 10 CFR 50.55a(a)(3)(i), the licensee requested relief from Code-required 100% volumetric examination for five Pressurizer Nozzle to Vessel Welds, examination category B-D, Item No. B3.110 (Nozzle-to-Vessel Welds) and six Steam Generator (Primary Side) Nozzle to Vessel Welds, Examination Category B-D, Item No. B3.130 (Nozzle-to-Vessel Welds). The limiting conditions are due to nozzle configuration and internal cladding which limits the ability to bounce the ultrasonic beam from the inside surface of the vessel. This results in examination of 60-75% of the required volume of the above eleven welds.

There is no proposed alternative examination for these welds. In order for this to be acceptable, please provide the following information.

(1) Illustrate with sketches and/or drawings how the five specific weld configurations interfere with the scanner's angle beam probes and limit the examination coverage.

RESPONSE:

General Information for Relief Requests RR-A2 and RR-A5

Relief Requests RR-A2 and RR-A5 request relief pursuant to 10 CFR 50.55a(a)(3)(i) as greater than 90% of the examination volume cannot be examined.

The components for which relief is requested are carbon steel vessels with stainless steel cladding on the inside surface. Due to this cladding, the ultrasonic beam cannot be "bounced" from the inside clad surface to increase the examination coverage. The ultrasonic examination is conducted in accordance with Section XI, Appendix I of the ASME Code, 1995 Edition through the 1996 Addenda. Section XI, Appendix I states that for vessels other than the Reactor Vessel greater than 2" in thickness, the ultrasonic examination shall be conducted in accordance with Article 4 of Section V. The following discussion illustrates how FENOC determines the volume examined during ultrasonic examinations.

Article 4, Section V of the ASME Code, 1995 Edition, 1996 Addenda requires the weld and adjacent base metal to be examined using nominal angles of 45 and 60 degrees, (deviation is permitted if geometry limits the coverage, however, separation of angles must be a least 10 degrees) and a straight beam. Four basic scan directions are required for the angle beams. Two perpendicular to the weld axis (axial scan) from opposite directions and two parallel to the weld axis (circumferential scan) from opposite directions. These requirements apply for each of the angle beams used (i.e. 45 and 60 degrees). Each of the 45 and 60 degree angle beams is required to pass through all of the weld volume in the four basic scan directions. However, the adjacent base metal scanning requirements allow the two beam angles to pass through in only one direction each for the axial and circumferential scans.

The following methodology is used to determine the extent of examination coverage.

1. A scaled cross sectional drawing of the component configuration, extent of coverage and the area of interest is drawn using a Computer Aided Design Drafting (CADD) program. The examination area is divided into 3 zones. Zones 1 and 3 are the base material on either side of the weld. Zone 2 is the weld material.

2. As noted above, Zones 1 and 3 require 5 scans (45 and 60 degrees from 1 axial and 1 circumferential and a straight beam minimum) while Zone 2 requires 9 scans (45 and 60 degrees from 2 axial and 2 circumferential directions and a straight beam). Each scan is assigned a weighting factor to be used in the determination of the overall examination coverage. For example, the axial scan of the Zone 1 base material for reflectors parallel to the weld (axial scan) consists of 2 angle beam scans from one direction. This represents 2 of the 5 (40 percent) base metal scans in the Zone 1 area. Therefore, the axial scan in Zone 1 is assigned a weighting factor of 0.40. Similarly, weighting factors for the other scans are determined as follows:

Zone 1 (5 Scans)	Zone 2 (9 Scans)	Zone 3 (5 Scans)
Axial = 40% (0.40)	Axial = 44% (0.44)	Axial = 40% (0.40)
Circ = 40% (0.40)	Circ = 44% (0.44)	Circ = 40% (0.40)
0 degrees = 20% (0.20)	0 degrees = 12% (0.12)	0 degrees = 20% (0.20)

3. The examination coverage (i.e., the amount of the sound beam that passes through each zone) is plotted on the CADD drawing for each of the ASME Code required scans. The area covered in each zone by the axial, circumferential, and straight beam examinations is then measured by CADD. If the area covered received all the required scans, it is considered 100 percent complete. If it received one-half of the required scans, it is considered 50 percent complete, etc. This area is then multiplied by the weld length to determine the examination volume covered.

4. The examination volume covered in each zone by the axial, circumferential, and straight beam scans is multiplied by the weighting factor. After applying a weighting to each scan, they are added together and divided by the total area for that zone to determine the percent complete for the zone. Then all the 3 zones are added together and divided by 3 to determine the total examination coverage.

5. When the total examination coverage is less than 90 percent, additional angles, such as 70 degrees and 35 degrees are plotted to determine if they will increase the examination coverage. Based on this determination and the principals of ALARA, additional scans beyond those required by the ASME Code are performed to increase examination coverage when considered necessary.

Specific Response to RAI 2.2

Attachment 3 shows the weld profiles and limitations associated with the Reactor Vessel Head-to-Flange Weld. Drawing ISI-SK-002 is included as Attachment 4.

Specific Response to RAI 2.4

The configuration of the nozzle to vessel welds is similar to that shown in Figure IWB-2500-7(a). Attachment 5 shows the weld profiles and limitations for the Pressurizer Spray Nozzle. The scans and limitations shown for this nozzle are typical of the other nozzles covered in Relief Request RR-A5.

RAI 2.3 Request for Relief No. RR-A3 – Pursuant to 10 CFR 50.55a(a)(3)(ii), the licensee requested relief from the removal of insulation from pressure retaining connections during pressure testing. The licensee will implement Code Case N-616 which allows VT-2 examination of the bolted connections with corrosive resistant materials without removing the insulation. Where Code Case N-616 will not be applicable, the licensee will perform the VT-2 examination after removing the insulation. However, for Class 1 systems, the VT-2 examination will be performed without being pressurized. For Class 2 systems, the VT-2 examination will be performed with the system pressurized.

The proposed alternative examinations have proved to be effective in detecting leaks from Class 1 and 2 pressure retaining bolted connections. In order for the proposed alternative to be acceptable, please provide the following information:

(1) The licensee states that similar to several corrosive resistant bolting materials in Code Case N-616, corrosion resistance of 410 series stainless steels (such as SA-193 Grade 6) has been demonstrated in EPRI Reports NP-5769 and TR-104748. It is not clear if this relief request is applicable to bolted

connections made out of stainless steel 410 series, in addition to Code Case N-616 materials. If it is applicable, clarify if NRC has previously approved this stainless steel bolt material to be corrosive resistant.

(2) The licensee references 60 insulated Class 1 bolted connections. Of these, how many will have the provisions of Code Case N-616 and EPRI Reports (if included) implementation (VT-2 examination of ASME Class 1 and 2 bolting without insulation removal when corrosive resistant bolting material has a chromium content greater than or equal to 10%)?

(3) As part of the basis, the licensee estimates that the removal and replacement of the insulation will result in a 20 man-rem exposure. If not all of the 60 insulated Class 1 bolted connections will have the insulation removed (per Code Case N-616), what is the anticipated decrease in exposure?

(4) In accordance with IWA-5110, the Examination Category B-P for Class 1 systems requires system pressure test to be performed during each refueling outage. In accordance with the proposed alternative examination, the licensee requested to perform VT-2 examination during the pressure test for the Class 1 pressure retaining bolted connections which has a chromium content less than 10%, once in each inspection period. Discuss the basis for changing the frequency of VT-2 examination of these Class 1 bolted connections from each refueling outage to each inspection period.

RESPONSE

The use of Code Case N-616 has been previously approved for Arkansas Nuclear One via TACs MB0665 and MB-0694. This includes 410 series stainless steels. The DBNPS does not intend to change the frequency of performing VT-2 examinations of Class 1 systems. In addition to using Code Case N-616, the request is to remove insulation on the components not covered by Code Case N-616 each period versus each refueling outage. If evidence is found of boric acid residue on one of the components not scheduled for insulation removal, the insulation will be removed for investigation in accordance with the Boric Acid Corrosion Control Program. Removal of insulation each period versus each refueling outage was approved in the second interval (Relief Request RR-A7 in the second interval) via TACs M79034 and M77942.

RAI 2.5 Request for Relief No. RR-A6 – Pursuant to 10 CFR 50.55a(a)(3)(ii), the licensee requested relief from the VT-2 examination of welds in the ASME Class 1 Decay Heat Removal Piping between Valve DH11 and DH12 during [the] system leakage test. The licensee discussed three specific options that are available to perform the system leakage test of piping between valves DH11 and DH12. The licensee

considers these options will require hardship and [be]a detriment to the quality and safety of the reactor coolant system.

There is [are] no proposed alternative examinations for this piping section. In order for this to be acceptable, please provide the following information:

(1) Clarify if there are other weld locations of identical size and materials and exposed to similar environmental and operating conditions, which can be pressure tested to establish the leak integrity of this pipe section.

RESPONSE

The upstream portions of this system that contains similar materials and more severe environmental and operating conditions are examined during the Class 1 leakage test. This Relief Request RR-A6 does contain a proposed alternative examination (page 221). A similar relief request was previously approved for the second interval (Relief Request RR-A16 in the second interval) via TAC MA4549.

RAI 2.6 Request for Relief No. RR-A7 – Pursuant to 10 CFR 50.55a(a)(3)(ii), the licensee requested relief from performing [a] system leakage test of the ASME Class 1 Reactor Coolant System small diameter ($\leq$1 inch) vent, drain, and instrument piping. The licensee will perform the system leakage test with the small diameter piping in its normal operating conditions (i.e., the first manual isolation valve in the closed position).

There are no proposed alternative examinations for these small bore piping. In order for this to be acceptable, please provide the following information:

(1) Clarify if there are other small bore piping of identical size and materials and exposed to similar environmental and operating conditions, which can be pressure tested to establish the leak integrity of this pipe section in between the two isolation valves.

(2) Since most of these small bore piping are not subject to inservice inspections, the licensee should commit to VT-2 or similar visual examination of these small bore piping when leakage in other small bore piping (e.g., non-isolable portions of the drain and vent connections) is noted.

RESPONSE

The upstream portions of these components that contain similar materials and more severe environmental and operating conditions are examined during the Class 1 leakage test. A VT-2

examination will extend to and include the outboard closed valve in the RCS boundary. This relief request was recently (June 4, 2001) approved for the second interval (Relief Request RR-A18 in the second interval) via TAC MA7210.

RAI 2.7 Request for Relief No. RR-A14 – Pursuant to 10 CFR 50.55a(a)(3)(i), the licensee requested to use Code Case N-639, Alternative Calibration Block Material, when the calibration blocks of the same material specification, product form, and heat treatment condition as the material being examined are not available.

Code CaseN-639 allows the use of calibration blocks fabricated from material of similar chemical analysis, tensile properties, and metallurgical structure as the material being examined. In order for this to be acceptable, please provide the following:

(1) The licensee mistakenly mentioned vessels greater than 2" in diameter in both the title section and the alternative examination. Clarify if the licensee meant this [those] vessels greater than 2" thickness in these two sections of the relief request.

RESPONSE

The references to 2" in diameter should be 2" in thickness. A revised relief request for RR-A14 is provided in Attachment 11.

RAI 2.8 Request for Relief No. RR-A15 – Pursuant to 10 CFR 50.55a(a)(3)(ii), the licensee requested to use the best available techniques, as qualified through the Performance Demonstration Initiative, from the accessible side of the weld on a best effort basis.

Class 1 dissimilar metal welds and austenitic stainless steel welds, and Class 2 stainless steel welds with single side access for ultrasonic examinations result in a reduction in examination coverage of the weld which is greater than 10%. The proposed alternative is the best possible method available. In order for this to be acceptable, please provide the following information:

(1) Identify the Examination Category and the Code Item Number for the Class 1 dissimilar metal welds.

(2) Clarify if these welds are surface examined for the entire length of the weld.

(3) The licensee states that the PDI Performance Demonstration Qualification Summary (PDQS) certificates for austenitic piping list the limitation that single side examination is performed on a best effort basis. Clarify these

limitations for single side examination and identify the Appendix VIII section that relates to [the] PDQS certificate.

(4) This relief is requested under 10 CFR 50.55a(a)(3)(ii). Clarify why the Code requirements would result in hardship.

RESPONSE

1. The Examination Category and the Code Item Number for the Class 1 dissimilar metal welds is Examination Category B-J, Code Item Number B9.11. Relief Request RR-A15 has been corrected and is provided in Attachment 11.

2. The welds addressed in this relief request are surface examined for their entire length.

3. The PDI Performance Demonstration Qualification Summary (PDQS) certificates are part of the PDI implementation of Appendix VIII. There is no Appendix VIII section that relates to the PDI certificate.

4. Relief Request RR-A15 was based on the sample relief request provided in the PDI Program Use Guide. Since submittal of this relief request, PDI has indicated that relief should be requested from the examination volume depicted in the IWB-2500 figures or IWC-2500 figures rather than 10 CFR 50.55a. The "Code Requirement" and the "Code Requirement from Which Relief is Requested" sections of this relief request has been revised to reference Figures IWB-2500-8 and IWC-2500-7.

RAI 2.9 Request for Relief No. RR-B1 – Pursuant to 10 CFR 50.55a(A)(3)(i), the licensee requested to perform an approximately 80% of the Code required volumetric examination of the decay heat removal heat exchanger E27-1 and E27-2 shell-to-flange welds.

The proposed alternative examination, in conjunction with the surface examination of the reinforcing plates, has been proved to be capable of detecting flaws in the shell-to-flange welds. In order for the proposed alternative to be acceptable, please provide the following:

(1) Illustrate with sketches and/or drawings how the specific shell-to-flange weld configurations interfere with the nearby components and limit the examination coverages.

(2) Provide Drawing ISI-SK-050 showing the Weld G, as indicated in the Code Requirement section of the relief request.

RESPONSE

General Information for Relief Request RR-B1

The Decay Heat Removal Heat Exchanger shell is stainless steel while the flange is carbon steel with stainless steel cladding on the inside surface. Due to this cladding the ultrasonic beam cannot be "bounced" from the inside clad surface to increase the examination coverage. The ultrasonic examination is conducted in accordance with Appendix III to Section XI of the ASME Code, 1995 Edition through the 1996 Addenda as the shell wall thickness is less 2" in thickness. Appendix III requires each weld receive 4 scans (2 axial and 2 circumferential in opposing directions). The following discussion illustrates how FENOC determines the volume examined during ultrasonic examination of Weld G.

The following methodology is used to determine the extent of examination coverage.

1. A scaled cross sectional sketch of the component configuration and the examination volume is drawn using a Computer Aided Design Drafting (CADD) program.

2. Each weld requires 4 scan directions (2 axial and 2 circumferential in opposing directions). Each scan provides 25% of the total examination coverage.

3. The ultrasonic beam paths are overlaid on the drawing. The area of coverage is measured using the CADD program for each scan direction.

4. The volume of coverage for each scan is calculated by multiplying the area of coverage by the length of the weld. This volume is then multiplied by 0.25 (25%) as each scan represents 25% of the total required scans. The products for each scan are added together to determine the combined volume scanned.

5. The combined volume is divided by the total volume of the weld and multiplied by 100. This is the percent of examination completed.

Response to RAI 2.9

Attachment 6 shows the weld profiles and limitations for the Decay Heat Removal Heat Exchanger Shell-to-Flange weld.

Drawing ISI-SK-050 is included as Attachment 7.

RAI 2.10 Request for Relief No RR-B2 – Pursuant to 10 CFR 50.55a(a)(3)(i), the licensee requested not to use the minimum nominal wall thickness criteria for sampling the

Class 2 piping welds. Instead, the licensee proposed a criteria which includes the inspection of C-F category welds and augmented examinations of certain groups of Class 2 welds.

The proposed alternative examination includes both surface and volumetric examination of all C-F welds. In addition, the licensee proposed augmented inspections of piping greater than 4" NPS and wall thickness between 1/5 inch and 3/8 inch that will receive both surface and volumetric examination. Also, piping with wall thickness less than 1/5 inch will receive surface examination only. In order for the proposed alternative to be acceptable, please provide the following:

(1) The licensee in its basis for relief categorized two groups of piping, namely one group with wall thickness less than 3/8" and greater than 1/5" and the second group has wall thickness less than 1/5". What are their pipe sizes (NPS)?

(2) When the Code criterion is applied, the licensee states that welds requiring examination in three specific systems constitute 93%, 26%, and 11% of the Class 2 welds. Are these percentages based on the total number of Class 2 welds in each individual system or several systems? What is the percentage of Class 2 welds requiring Code-specified inspection based on the total number of Class 2 welds in the plant?

(3) It is stated that welds requiring examination in the Emergency Core Cooling Systems are about 1/3 of the total number in the systems. This distribution is such that the requirements of C-F Note 2 cannot be met. Clarify this conclusion, preferably with some numbers.

(4) In the proposed alternative, the last bullet states that welds with wall thickness less than 1/5 inch will receive an augmented surface examination. What is [are] their pipe diameters?

(5) Clarify if the licensee intends to apply or has already applied for using the Risk-Informed ISI program for the Class 2 piping welds.

RESPONSE

This request was previously approved in the second interval (Relief Request RR-B4 in the second interval) via TAC M87188. At present Davis-Besse is not pursuing RI-ISI for Class 2 piping welds. Should any Code actions occur which would affect surface examinations, this relief request would be revised and resubmitted as necessary. Pipe sizes with wall thickness less than 3/8" (including the group with wall thickness less than 1/5") range from 6" to 18"NPS.

Attachments 8 and 9 (Tables RAI 2.10-1 and RAI 2.10-2) show the distribution of welds within the C-F-1 and C-F-2 systems.

RAI 2.11 Request for Relief No. RR-B3 – Pursuant to 10 CFR 50.55a(a)(3)(i), the licensee requested for reduction in Code-required examination coverage for the HPI pump nozzle to casing welds.

The licensee will perform surface examination of these welds to the maximum extent possible. Also, the licensee states that this will be supplemented by the support attachment weld inspection as required by the Code. In order for the proposed alternative to be acceptable, please provide the following:

(1) The licensee states that the examination of the pump casing-to-nozzle welds will be supplemented by the examination of accessible surfaces of the pump support attachment welds as required by Code Category C-C. Clarify how this will supplement the nozzle-to-casing weld surface examination.

RESPONSE

A similar relief request was previously approved for the second interval (Relief Request RR-B7 in the second interval) via TAC M93310. As shown in the picture included with the relief request, the pump support attachment welds cover the nozzle welds. In a phone conversation with the NRC on December 20, 1995, the NRC requested that the examination include the pump support attachment welds and the pipe to nozzle welds as part of the approval process of RR-B7 in the second interval.

RAI-2.12 Request for Relief No. RR-E7 – Pursuant to 10 CFR 50.55a(a)(3)(i), the licensee requested for using the provisions applicable to direct visual VT-3 examinations on the same specimen as used to qualify the remote visual examinations.

In order for the proposed alternative to be acceptable, please provide the following:

(1) What is the basis for selecting a chipped paint specimen or an 18% neutral gray card as qualifiers for remote visual examination?

(2) The licensee states that Subsection IWE of the 1998 Edition of ASME Section XI no longer requires a VT-3 examination of the containment surfaces. Therefore, the requirements of Table IWA-2210-1 are no longer applicable to IWE containment examinations. If this is the case, then why [do] we need this relief request. Clarify.

RESPONSE

This relief request was revised per discussions with the NRC on 8/2/01 and resubmitted on 9/7/01 via FENOC letter Serial Number 2729.

Docket Number 50-346
License Number NPF-3
Serial Number 2736
Attachment 3
Page 1 of 4

WELD/COMPONENT PROFILE(S) AND/OR EXAM LIMITATION(S)

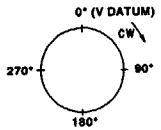

INDICATE ON PROFILE:
1. WELD CENTER LINE ℄)
2. WELD EDGES (TOES)
3. APPROX. LOCATION OF PROFILE
4. FLOW DIRECTION
5. THICKNESSES
6. US & DS COMPONENTS

INTERFERING CONDITION(S): Service Structure, Flange configuration, Lifting Lugs.

FIGURE NUMBER: BO1.040.0524.1

PERCENT OF EXAM COMPLETED: 81.8%

(Include calculations and comments below)

Weld Circumference = 499.5"
Zone 1 Area = 24.6 in²
Zone 2 Area = 10.86 in²
Zone 3 Area = 29.8 in²

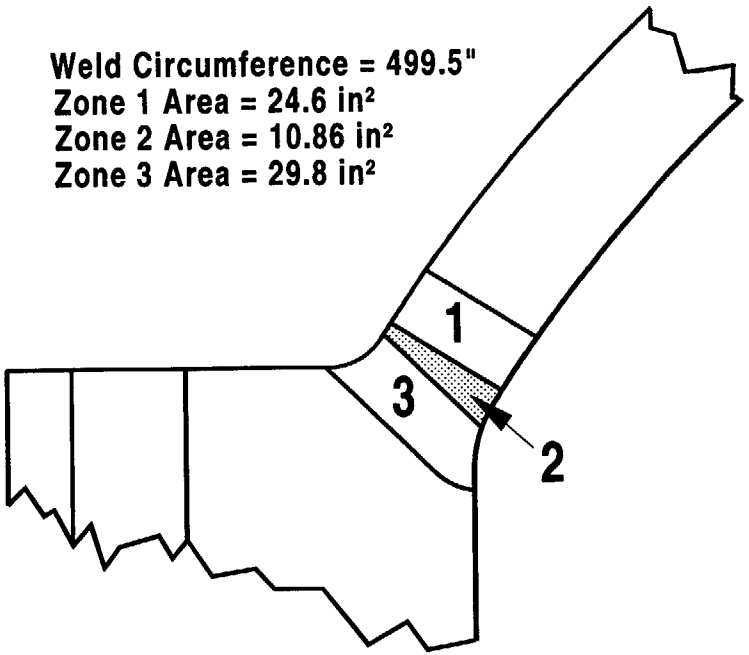

AREA	TOTAL VOLUME (in.³)	COVERAGE			TOTAL % COMPLETE
		AXIAL	CIRC.	0°	
1	12287.7	9969.8	11623.5	11623.5	89.2%
		X .40	X .40	X .20	
		3987.9	4649.4	2324.7	
2	5424.6	2348.4	5131.4	5131.4	72.0%
		X .44	X .44	X .12	
		1033.3	2257.8	615.8	
3	14885.1	10267.4	14080.5	14080.5	84.3%
		X .40	X .40	X .20	
		4107.0	5632.2	2816.1	
					81.8%

Docket Number 50-346
License Number NPF-3
Serial Number 2736
Attachment 3
Page 2 of 4

RPV HEAD TO FLG.

Axial Scan

100%
50%
25%

Service Structure

Weld Circumference = 499.5" - 27" (lug limitations) = 472.5"

ZONE 1 (24.6 in²)

100% = 17.6 in² x 1.0 = 17.6 x 472.5" circ. = 8316 in³
50% = 7.0 in² x 0.5 = 3.5 x 472.5" circ. = 1653.8 in³
TOTAL = 9969.8 in³

ZONE 2 (10.86 in²)

50% = 9.0 in² x 0.5 = 4.5 x 472.5" circ. = 2126.3 in³
25% = 1.86 in² x 0.25 = .47 x 472.5" circ. = 222.1 in³
TOTAL = 2348.4 in³

ZONE 3 (29.8 in²)

100% = 19.97 in² x 1.0 = 19.97 x 472.5" circ. = 9435.8 in³
50% = 3.51in² x 0.5 = 1.76 x 472.5" circ. = 831.6 in³
TOTAL = 10267.4 in³

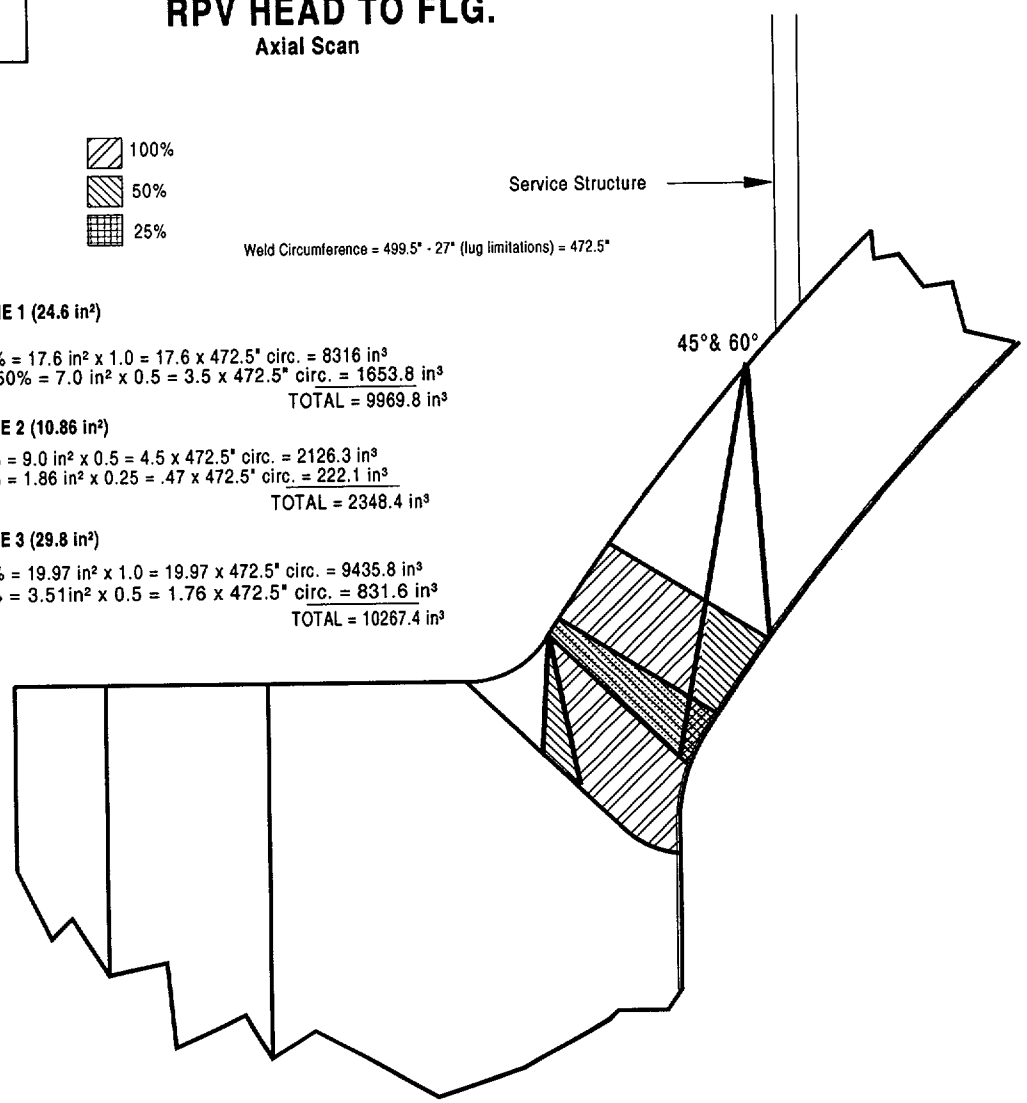

Docket Number 50-346
License Number NPF-3
Serial Number 2736
Attachment 3
Page 3 of 4

RPV HEAD TO FLG.

CIRCUMFERENTIAL & ZERO SCANS

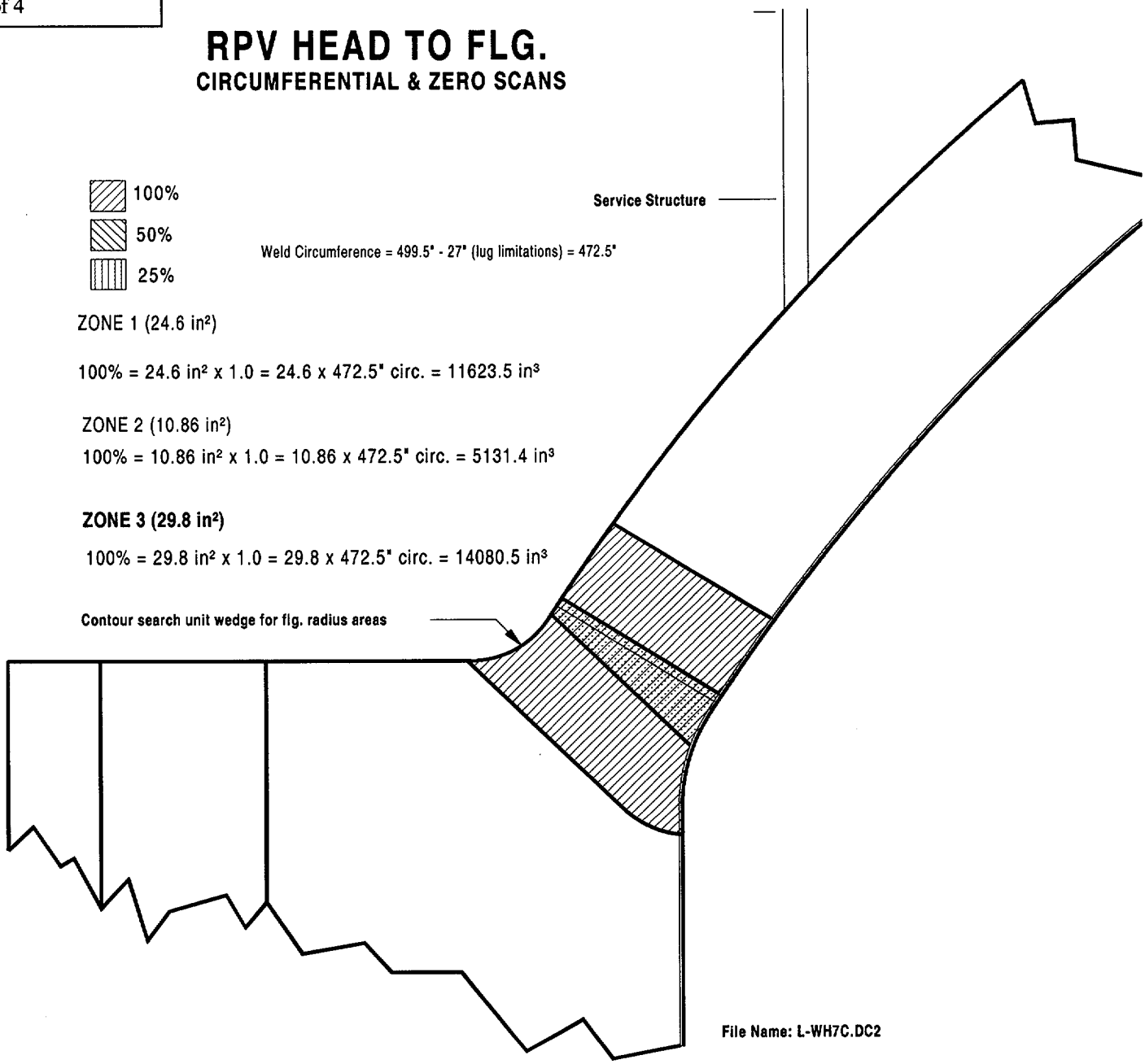

ZONE 1 (24.6 in²)

100% = 24.6 in² x 1.0 = 24.6 x 472.5" circ. = 11623.5 in³

ZONE 2 (10.86 in²)

100% = 10.86 in² x 1.0 = 10.86 x 472.5" circ. = 5131.4 in³

ZONE 3 (29.8 in²)

100% = 29.8 in² x 1.0 = 29.8 x 472.5" circ. = 14080.5 in³

RPV HEAD TO FLG.

No Coverage under Lifting Lugs

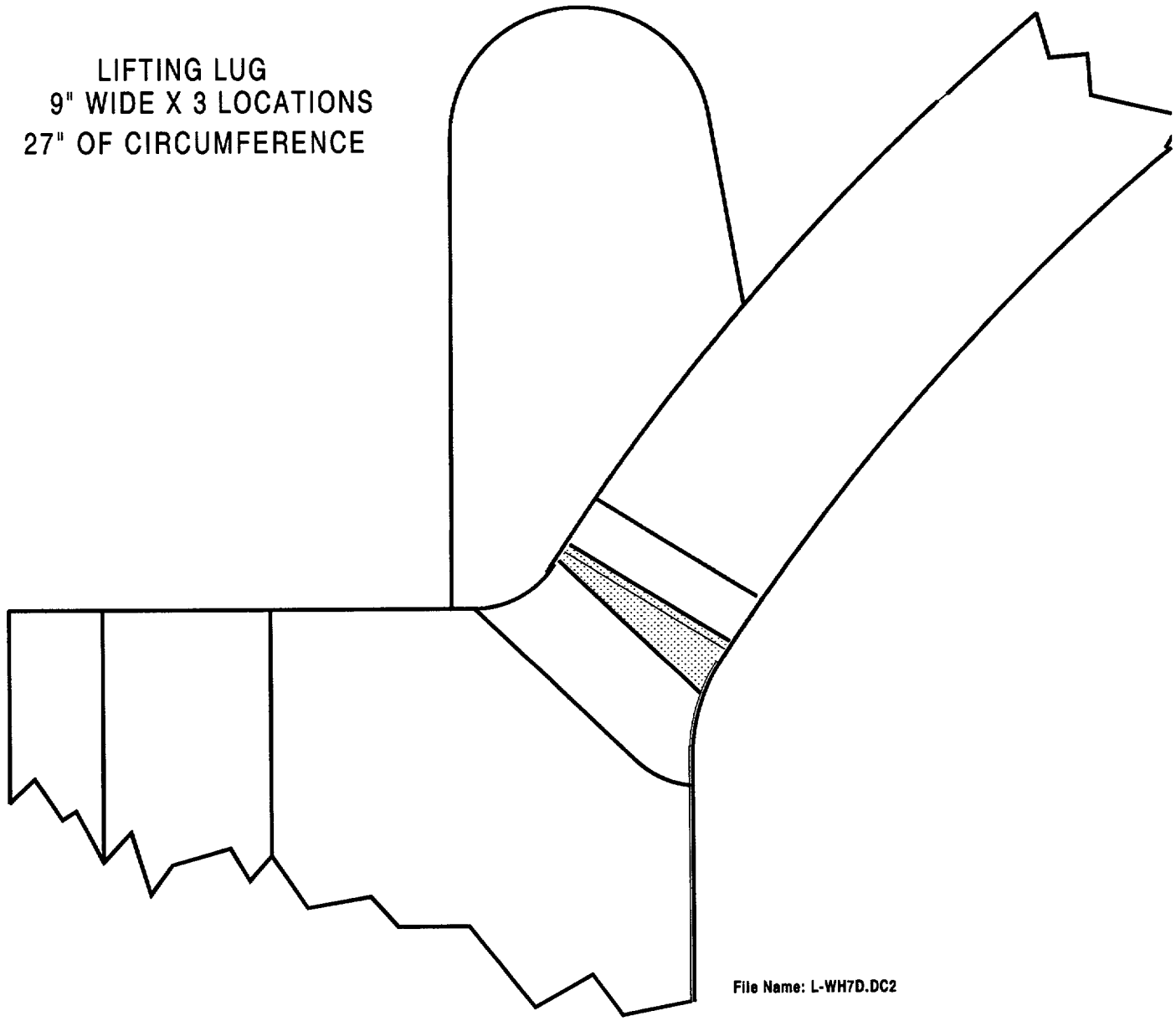

Docket Number 50-346
License Number NPF-3
Serial Number 2736
Attachment 4
Page 1 of 1

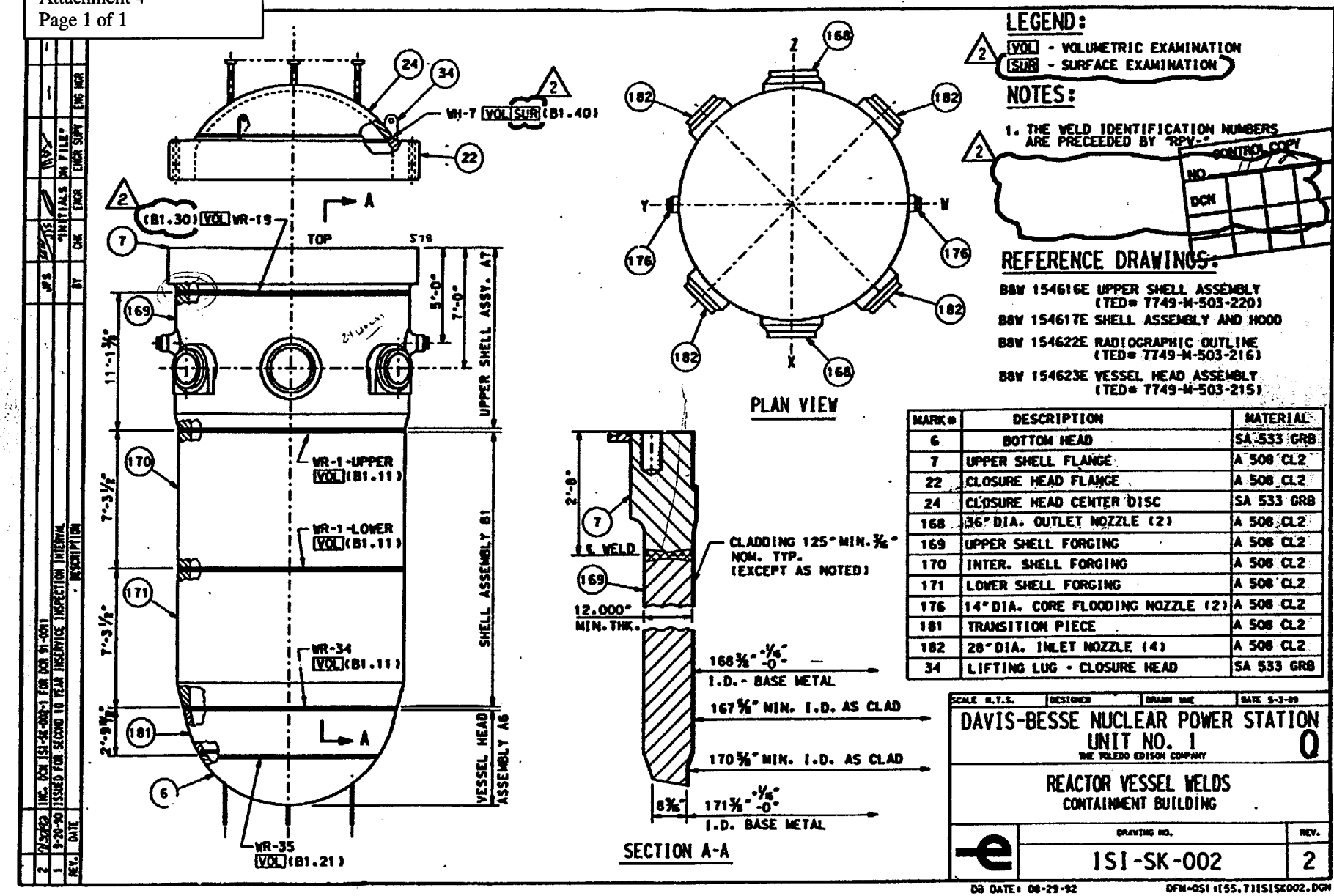

FILE NAME: L-WG50A

WELD/COMPONENT PROFILE(S) AND/OR EXAM LIMITATION(S)

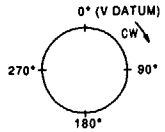

INDICATE ON PROFILE:
1. WELD CENTER LINE℄)
2. WELD EDGES (TOES)
3. APPROX. LOCATION OF PROFILE
4. FLOW DIRECTION
5. THICKNESSES
6. US & DS COMPONENTS

INTERFERING CONDITION(S): NOZZLE CONFIGURATION

FIGURE NUMBER:

PERCENT OF EXAM COMPLETED: 72%

(Include calculations and comments below)

WELD DIAMETER = 8.75 in.
WELD CIRCUMFERENCE = 27.49 in.

ZONE 1 = 11.34 X 27.49 = 311.7 in³
ZONE 2 = 6.06 X 27.49 = 166.6 in³
ZONE 3 = 10.94 X 27.49 = 300.7 in³

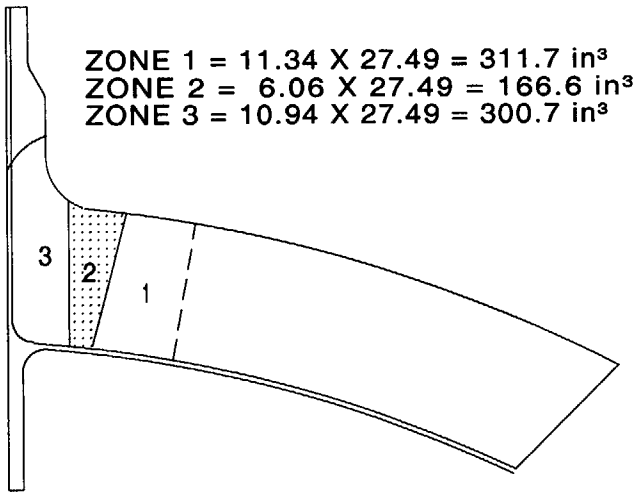

AREAS BELOW WERE CALCULATED BY CADD

ZONE	TOTAL VOLUME (in.³)	COVERAGE (in³)			TOTAL % COMPLETE
		AXIAL	CIRC.	0°	
1	311.7	311.7	311.7	311.7	100%
		X .40	X .40	X .20	
		124.7	124.7	62.34	
2	166.6	78.1	115.7	166.6	63.2%
		X .44	X .44	X .12	
		34.4	50.9	19.99	
3	300.7	237.78	19.2	300.7	54.2%
		X .40	X .40	X .20	
		95.11	7.7	60.14	
					72%

AXIAL DIRECTION COVERAGE

ZONE 1

11.34 in²x 100% (2 angles, 1 direction) = 11.34 in²
x 27.49 in (circumference)
311.7 in³

ZONE 2

5.69 in² x 50% (2 angles, 1 direction) = 2.8 in²
0.16 in² x 25% (1 angle, 1 direction) + = 0.04 in²

27.49 in (circumference) x 2.84 in = 78.1 in³

ZONE 3

7.45 in² x 100%(2 angles, 1 direction) = 7.45 in²
2.41 in² x 50% (1 angle, 1 direction) + = 1.20 in²

27.49 in (circumference) x 8.65 in² = 237.78 in³

CIRCUMFERENCIAL DIRECTION COVERAGE

ZONE 1

11.34 in² x 100% (2 angles, 1 direction) = 11.34 in²
x 27.45 in (circumference)
311.7 in³

ZONE 2

4.21 in² x 100% (2 angles, 2 direction) = 4.21 in²
x 27.45 in (circumference)
115.7 in³

ZONE 3

0.70 in² x 100% (2 angles, 1 direction) = 0.70 in²
x 27.45 in (circumference)
19.2 in³

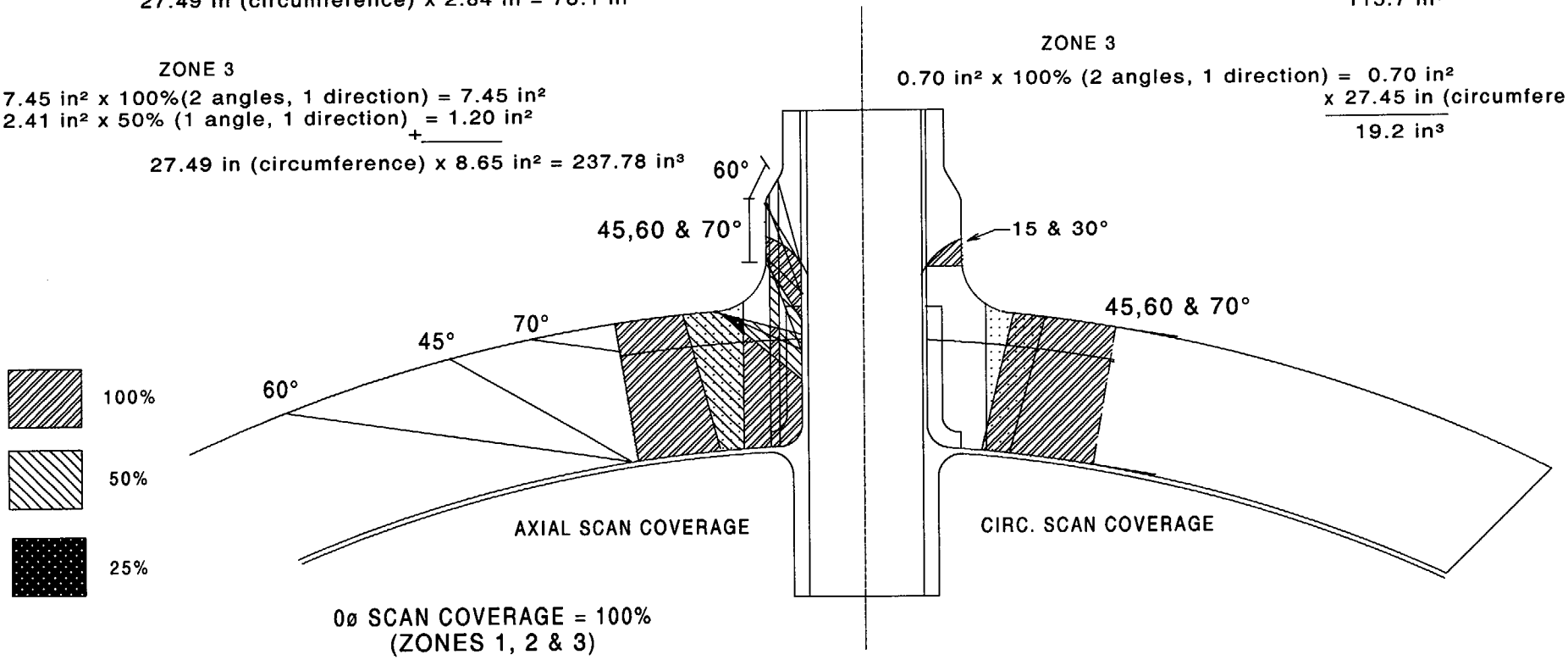

0ø SCAN COVERAGE = 100%
(ZONES 1, 2 & 3)

WELD/COMPONENT PROFILE(S) AND/OR EXAM LIMITATION(S)

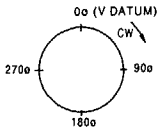

INDICATE ON PROFILE:
1. WELD CENTER LINE ℄)
2. WELD EDGES (TOES)
3. APPROX. LOCATION OF PROFILE
4. FLOW DIRECTION
5. THICKNESSES
6. US & DS COMPONENTS

INTERFERING CONDITION(S): Flange, Support beam, Nozzle reinforcement plate / weld

FIGURE NUMBER:

PERCENT OF EXAM COMPLETED: 79.67%

(Include calculations and comments below)

DH Cooler 1-1 Weld G

AREA	TOTAL VOLUME (in.^{3})	COVERAGE			TOTAL % COMPLETE
		AXIAL	CIRC.	0°	
N/A	186	133.39	163	N/A	79.67%
		X .50	X .50	N/A	
		66.69	81.5	N/A	

CROSS SECTION AREA = 1.33 sq. in.
WELD CIRCUMFERENCE = 140"
AREA OF INTEREST VOLUME = 186 cubic in.

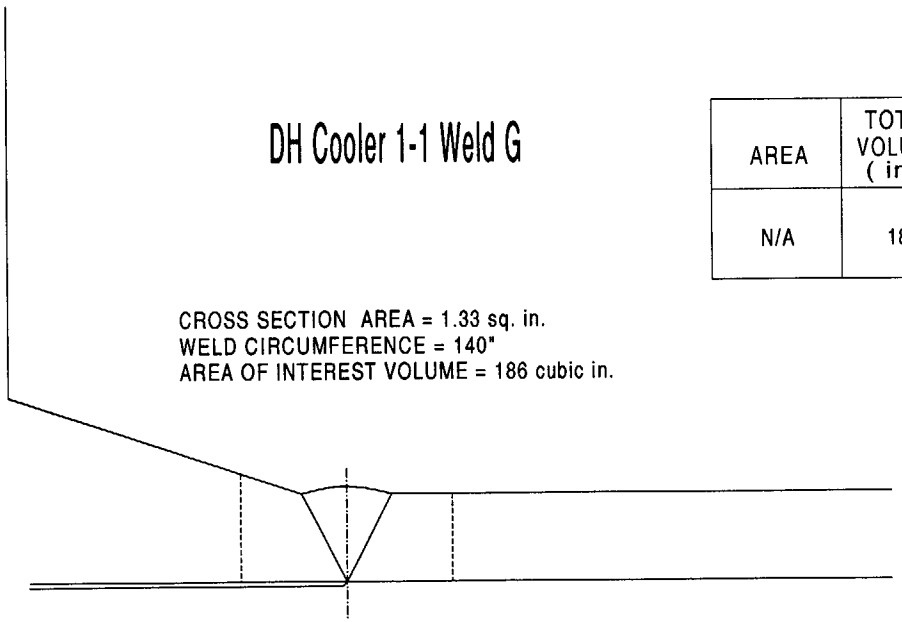

NOTES
1. Use ASME Section XI, Appendix III Examination Techniques
2. Vessel < 2" thickness
3. Examination Volume - Fig. IWC-2500-1

DH Cooler 1-1 Weld G

AXIAL SCAN

140" total length X 1.33 total area = 186 cu. in.
114" weld length X 1.04 sq. in. = 118.56 cu. in. (unrestricted areas)
14" weld length X .25 sq. in. = 3.43 cu. in. (support beam)
12" weld length X .95 sq. in. = 11.4cu. in. (reinforcing plates)

Total Axial Volume Coverage = 133.39 cu. in.

Coverage in Un-restricted Areas

100% Coverage = .79 in.^{2} x 1.0 = .79 in^2 (combined axial scans)
50% Coverage = .50 in.^{2} x 0.5 = .25 in.^{2} (combined axial scans)

Total Axial Coverage = 1.04 in.^{2}

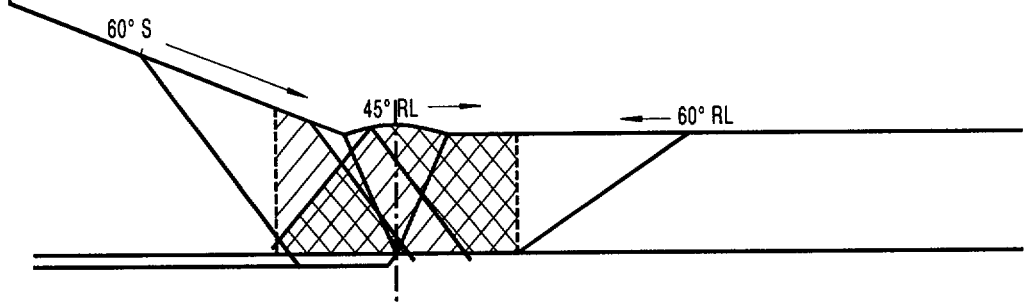

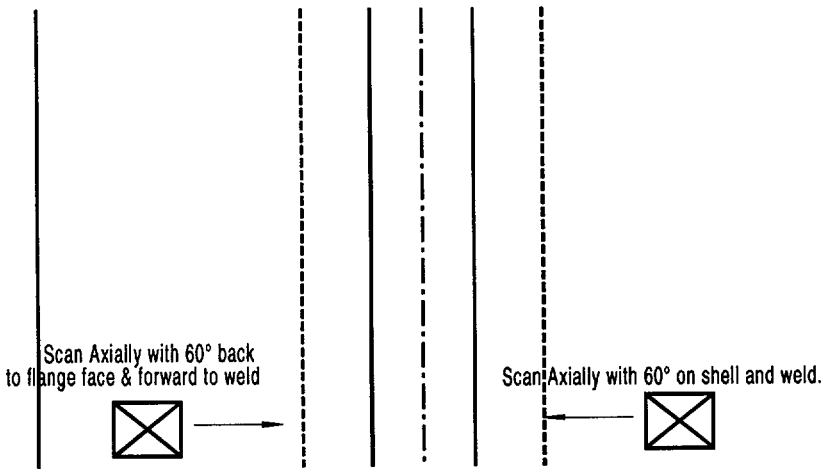

DH Cooler 1-1 Weld G

AXIAL SCAN

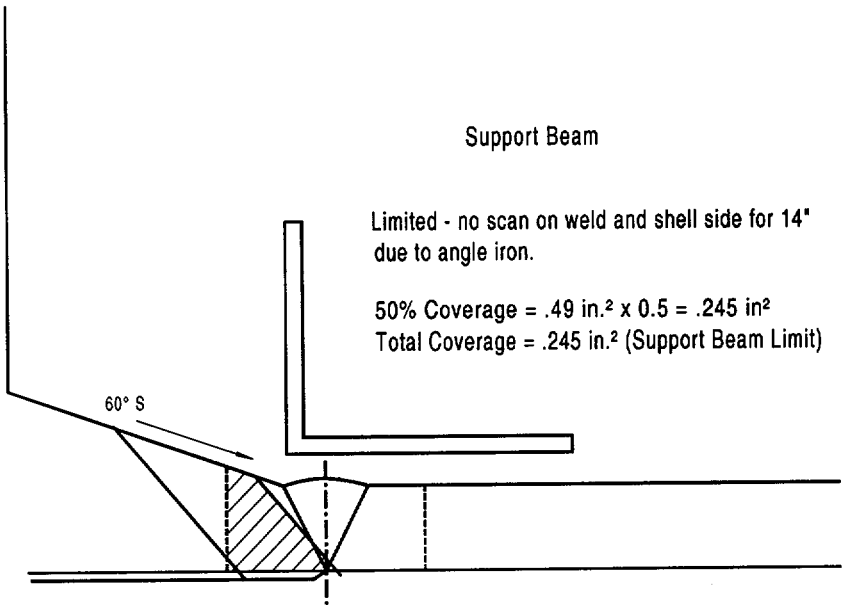

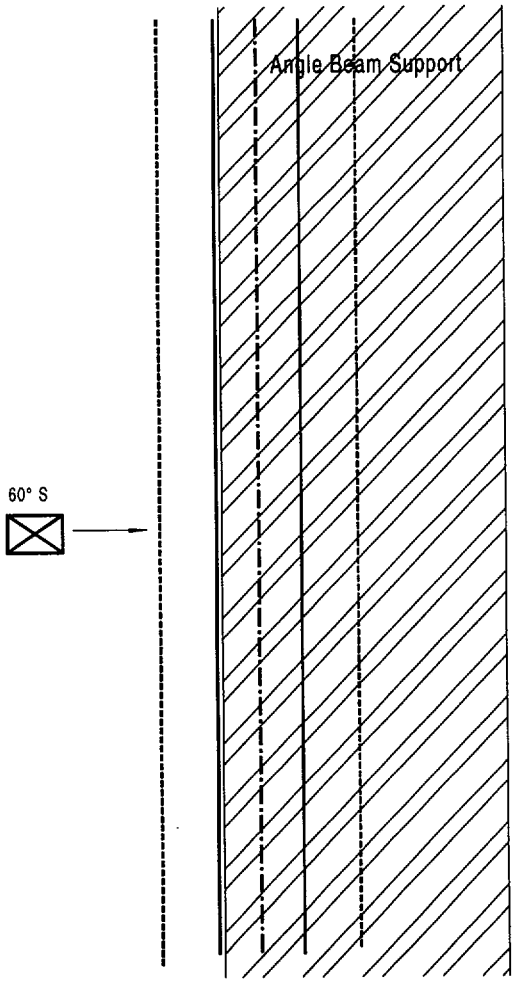

File Name: L-DHX-GC

DH Cooler 1-1 Weld G

AXIAL SCAN

Reinforcing Plates Limitations
Limited area due to reinforcing plate = 12"
(2 - 6" Areas)

100% Coverage = .61 in.^{2} x 1.0 = .61 in.^{2}
50% Coverage = .68 in.^{2} x 0.5 = .34 in^2
Total Coverage = .95 in.^{2}

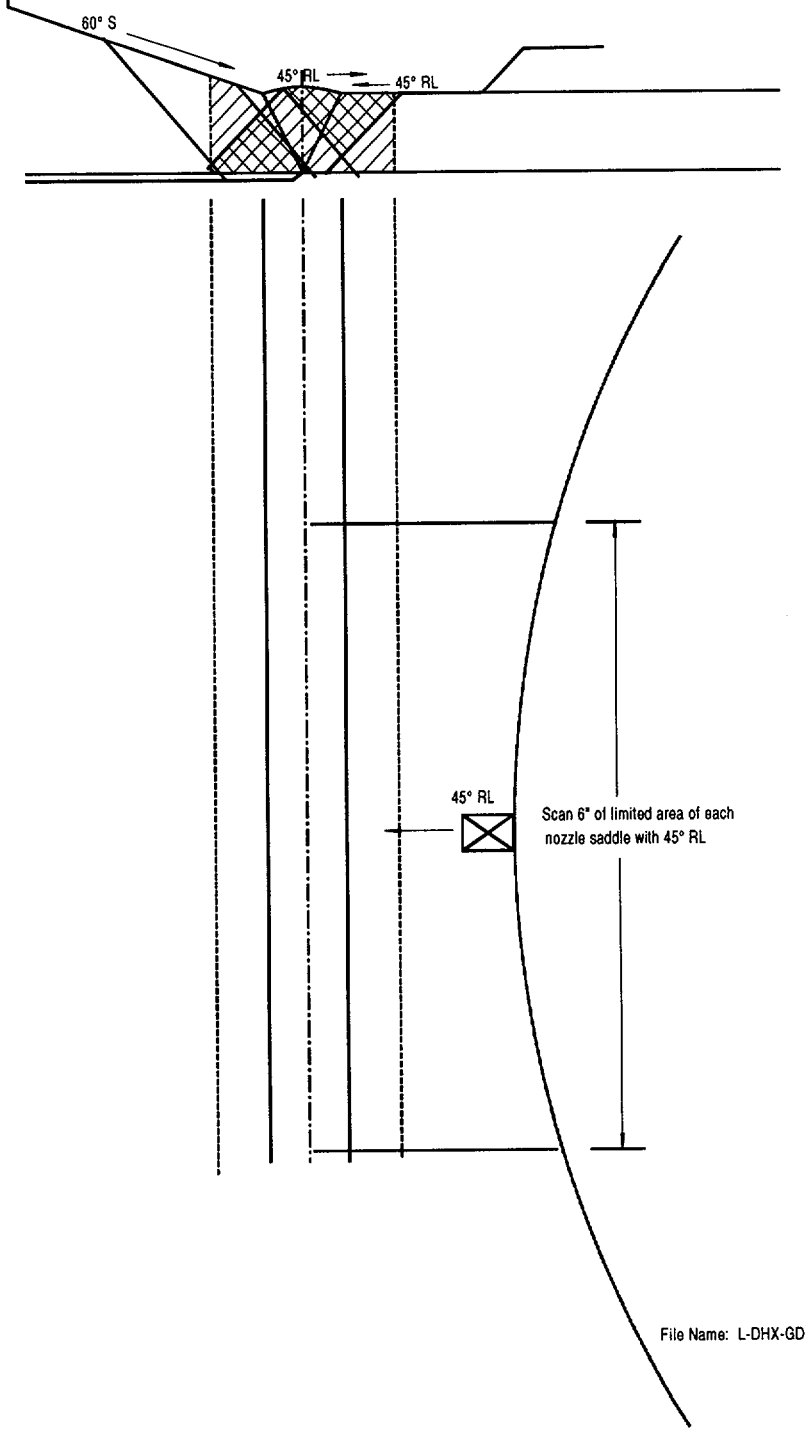

File Name: L-DHX-GD

DH Cooler 1-1 Weld G

CIRC SCAN

Weld Circumference = 140"
Total Area = 1.33 sq. in.
Coverage under Support = 14" x .5 sq. in. = 7 cu. in.
Coverage of remaining weld = 126" x 1.24 = 156 cu. in.
Total Circ. Coverage = 163 cu. in. (unrestricted + limited areas)

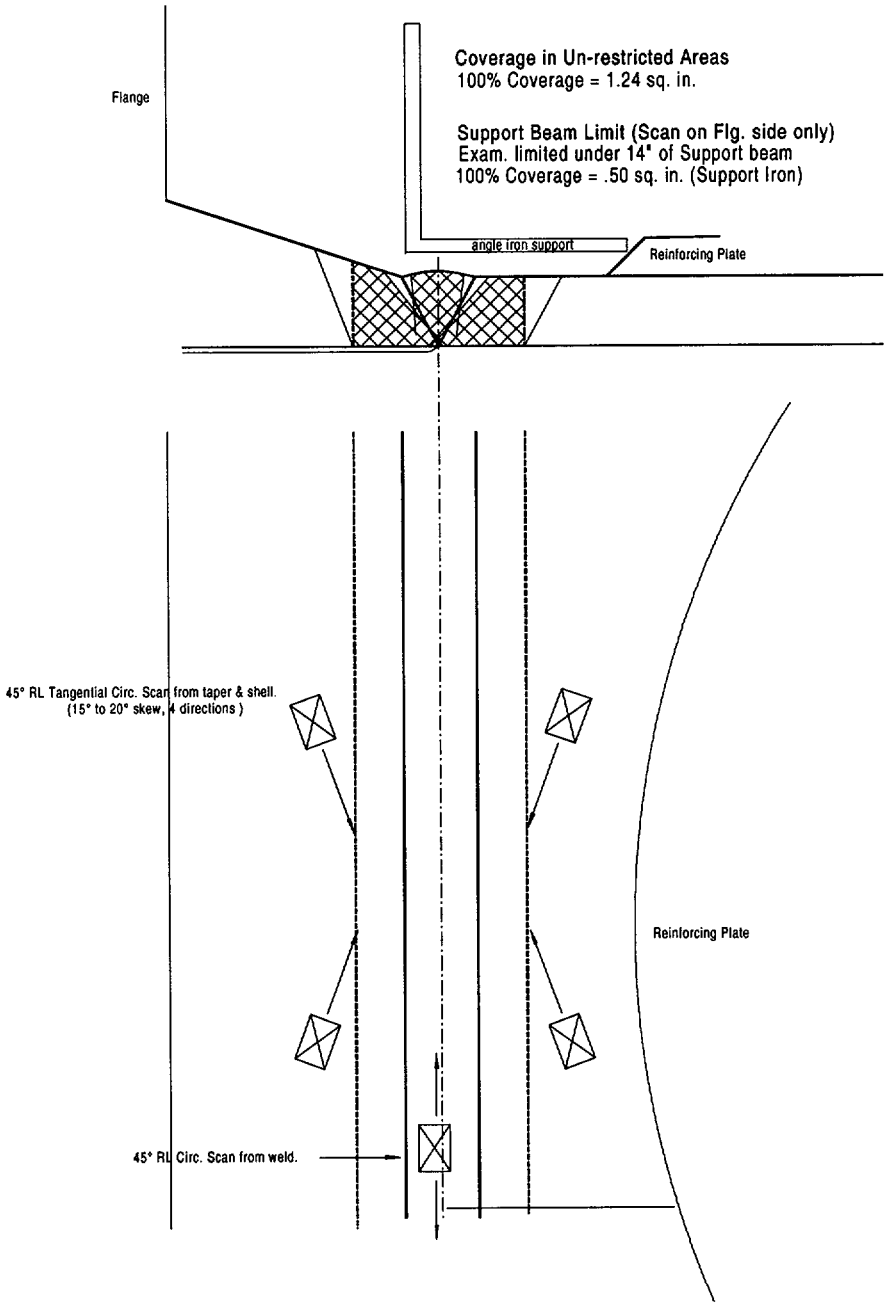

File Name: L-DHX-GE

Docket Number 50-346
License Number NPF-3
Serial Number 2736
Attachment 7
Page 1 of 1

DECAY HEAT NOZZLE	WELD ID	DESCRIPTION	EXAMINATION	CLASS 2 TUBE SIDE MATERIALS	CLASS 3 SHELL SIDE MATERIALS
INLET	C	REINFORCING PLATE TO NOZZLE WELD	SURFACE	SA240 TP304 TO SA312 TP304	SA285-C TO SA53-B
	I	REINFORCING PLATE TO SHELL WELD	SURFACE	SA240 TP304	SA285-C
OUTLET	E	REINFORCING PLATE TO NOZZLE WELD	SURFACE	SA240 TP304 TO SA312 TP304	SA285-C TO SA53-B
	J	REINFORCING PLATE TO SHELL WELD	SURFACE	SA240 TP304	SA285-C

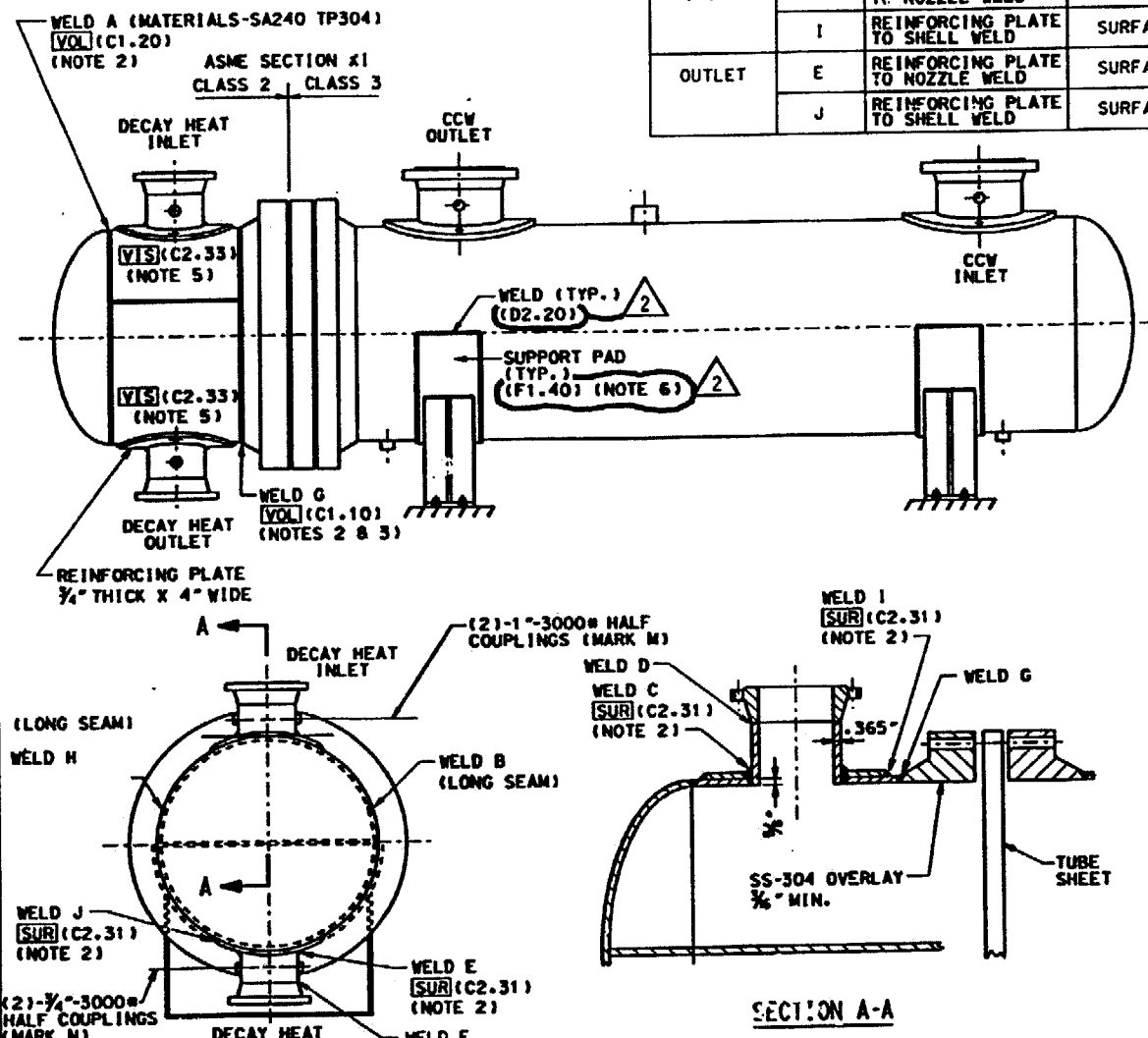

LEGEND:

VOL - VOLUMETRIC EXAMINATION
SUR - SURFACE EXAMINATION
VIS - VISUAL (VT-2) EXAMINATION

NOTES:

1. THIS DRAWING IS APPLICABLE TO DECAY HEAT COOLERS 1-1 (E27-1) AND 1-2 (E27-2).
2. UNLESS OTHERWISE SPECIFIED, ALL EXAMINATIONS ARE PERFORMED ON THE CLASS 2 SIDE OF DECAY HEAT COOLER 1-1 (E27-1).
3. THE ULTRASONIC EXAMINATION OF WELD G IS PERFORMED FROM ONE SIDE ONLY PER RELIEF REQUEST RR B1.
4. SECTION A-A IS TYPICAL FOR BOTH THE INLET AND OUTLET DECAY HEAT NOZZLES.
5. A VT-2 EXAMINATION OF THE TWO TELLTALE HOLES IN THE REINFORCING PLATE OF EACH NOZZLE IS REQUIRED DURING THE SYSTEM FUNCTIONAL TEST.
6. A VT-3 EXAMINATION SHALL BE PERFORMED ON THE SUPPORTS FOR DECAY HEAT COOLER 1-1 (E27-1). THE VT-3 EXAMINATION SHALL BE PERFORMED FROM EACH BOLTED CONNECTION TO THE BUILDING STRUCTURE TO THE SUPPORT PAD ATTACHMENT WELD TO THE SHELL.

REFERENCE DRAWINGS:

ATLAS INDUSTRIAL MFG. CO. D2552-6
(TED #7749-M-517-8)

SCALE N.T.S.	DESIGNED	DRAWN VME	DATE 5-3-89

DAVIS-BESSE NUCLEAR POWER STATION
UNIT NO. 1 — 0
THE TOLEDO EDISON COMPANY

DECAY HEAT COOLERS 1-1 AND 1-2
OUTLINE AND SUPPORTS

DRAWING NO.	REV.
ISI-SK-050	2

DB DATE: 06-29-92 DFN-OS1:(55.7)ISISK050.D

REV.	DATE	DESCRIPTION	INITIALS	CHK	ENGR	ENGR SUPV	ENG MGR
2	9/Sept/1	INC. DCN ISI-SK-050-1 FOR DCR 91-0011	ON FILE	DT			
1	9-20-90	ISSUED FOR SECOND 10 YEAR INSERVICE INSPECTION INTERVAL					

Table RAI 2.10-1 - Class 2 Piping Examination Category C-F-1 Calculations
Third 10-Year Inspection Interval

System	Code Item Number C05.011	C05.11A	C05.11B	C05.021	C05.21A	C05.030	C05.041	Total	Total No. of C-F-1 Welds	% of Total	% of System Number Multiplied by 82 Welds	Number of Welds Scheduled for Exam
Containment Spray	0	88	12	0	0	0	0	100	100	9.3	7.6	**8**
Decay Heat (Note 1)	42	284	122	0	21	0	12	481	481	44.5	36.5	**37**
High Pressure Injection	0	0	32	293	142	15	6	488	488	45.1	37.0	**38**
Other	0	0	12	0	0	0	0	12	12	1.1	0.9	**0**
Total	**42**	**372**	**178**	**293**	**163**	**15**	**18**	**0**	**1081**	**1081**		**83**

Notes:
1. Welds in the Decay Heat System include welds in the Borated Water System.
2. The total number of welds requiring examination is determined by multiplying the total number of welds eligible for examination (1081) by 7.5% which equals (81.075) welds. This number is adjusted to 82 welds
3. Code Item Number Descriptions
   - C.05.011 - Piping Welds ≥ 3/8 in. Nominal Wall Thickness for Piping ≥ NPS 4
   - C.05.11A - Piping Welds ≥ 1/5 in. and ≤ 3/8 in. Nominal Wall Thickness for Piping ≥ NPS 4
   - C.05.11B - Piping Welds ≤ 1/5 in. Nominal Wall Thickness for Piping ≥ NPS 4
   - C.05.021 - Piping Welds > 1/5 in. and ≤ 3/8" Nominal Wall Thickness for Piping ≥ NPS 2 and ≤ NPS 4
   - C.05.21A - Piping Welds < 1/5 in. Nominal Wall Thickness for Piping ≥ NPS 2 and ≤ NPS 4
   - C05.030 - Socket Welds
   - C05.041 - Pipe Branch Connections of Branch Piping ≥ NPS 2

Table RAI 2.10-1 - Class 2 Piping Examination Category C-F-1 Calculations
Third 10-Year Inspection Interval (continued)

Code Item Number	System: Containment Spray	Decay Heat (Note 1)	High Pressure Injection	Other	Total	Total No. of C-F-1 Welds	% of Total	% of System Total Multiplied by 82 Welds	Number of Welds Scheduled for Exam
C05.011	0	42	0	0	**42**	42	3.9	3.2	**4**
C05.11A	88	284	0	0	**372**	372	34.4	28.2	**28**
C05.11B	12	122	32	12	**178**	178	16.5	13.5	**13**
C05.021	0	0	293	0	**293**	293	27.1	22.2	**22**
C05.21A	0	21	142	0	**163**	163	15.1	12.4	**13**
C05.030	0	0	15	0	**15**	15	1.4	1.1	**1**
C05.041	0	12	6	0	**18**	18	1.7	1.4	**2**
Total	100	481	488	12	**1081**	1081			**83**

Notes:
1. Welds in the Decay Heat System include welds in the Borated Water System.
2. The total number of welds requiring examination is determined by multiplying the total number of welds eligible for examination (1081) by 7.5% which equals (81.075) welds. This number is adjusted to 82 welds
3. Code Item Number Descriptions
   - C.05.011 - Piping Welds ≥ 3/8 in. Nominal Wall Thickness for Piping ≥ NPS 4
   - C.05.11A - Piping Welds ≥ 1/5 in. and ≤ 3/8 in. Nominal Wall Thickness for Piping ≥ NPS 4
   - C.05.11B - Piping Welds ≤ 1/5 in. Nominal Wall Thickness for Piping ≥ NPS 4
   - C.05.021 - Piping Welds > 1/5 in. and ≤ 3/8 in. Nominal Wall Thickness for Piping ≥ NPS 2 and ≤ NPS 4
   - C.05.21A - Piping Welds < 1/5 in. Nominal Wall Thickness for Piping ≥ NPS 2 and ≤ NPS 4
   - C05.030 - Socket Welds
   - C05.041 - Pipe Branch Connections of Branch Piping ≥ NPS 2

Table RAI 2.10-2 - Class 2 Piping Examination Category C-F-2 Calculations
Third 10-Year Inspection Interval

System	Code Item Number C05.051	C05.51A	C05.070	C05.081	Total	Total No. of C-F-2 Welds	% of Total	% of System Total Multiplied by 30 Welds	Number of Welds for Exam Scheduled
Auxiliary Feedwater	69	0	0	0	69	69	17.5	5.2	**6**
Main Feedwater	77	0	0	0	77	77	19.5	5.8	**6**
Main Steam	99	80	0	24	203	203	51.4	15.4	**20**
Other	4	42	0	0	46	46	11.6	3.5	**0** Note 2
Total	**249**	**122**	**0**	**24**	**395**	**395**			**32**

Notes:

1. The total number of welds requiring examination is determined by multiplying the total number of welds eligible for examination (395) by 7.5% which equals (29.625) welds. This number is adjusted to 30 welds
2. Welds are not scheduled for examination as these welds are not required to be nondestructively examined per Examination Category C-F-2. These welds are included in the total weld count to which the 7.5% sampling rate is applied.
3. Code Item Number Descriptions
   - C.05.051 - Piping Welds ≥ 3/8 in. Nominal Wall Thickness for Piping ≥ NPS 4
   - C.05.51A - Piping Welds ≥ 1/5 in. and ≤ 3/8 in. Nominal Wall Thickness for Piping ≥ NPS 4
   - C05.070 - Socket Welds
   - C05.081 - Pipe Branch Connections of Branch Piping ≥ NPS 2

Table RAI 2.10-2 - Class 2 Piping Examination Category C-F-2 Calculations
Third 10-Year Inspection Interval (continued)

Code Item Code Item Number Scheduled	System: Auxiliary Feedwater	Main Feedwater	Main Steam	Other	Total	Total No. of C-F-1 Welds	% of Total	% of System Total Multiplied by 30 Welds	Number of Welds for Exam
C05.051	69	77	99	4	**249**	249	63.0	18.9	**20**
C05.51A	0	0	80	42	**122**	122	30.9	9.3	**10**
C05.070	0	0	0	0	**0**	0	0.0	0.0	**0**
C05.081	0	0	24	0	**24**	24	6.1	1.8	**2**
Total	69	77	203	46	**395**	**395**			**32**

Notes:

1. The total number of welds requiring examination is determined by multiplying the total number of welds eligible for examination (395) by 7.5% which equals (29.625) welds. This number is adjusted to 30 welds
2. Code Item Number Descriptions
   - C.05.051 - Piping Welds ≥ 3/8 in. Nominal Wall Thickness for Piping ≥ NPS 4
   - C.05.51A - Piping Welds ≥ 1/5 in. and ≤ 3/8 in. Nominal Wall Thickness for Piping ≥ NPS 4
   - C05.070 - Socket Welds
   - C05.081 - Pipe Branch Connections of Branch Piping ≥ NPS 2

Drawings Supporting the DBPNS Third Ten-Year Inservice Inspection Interval Program
(Previously Transmitted by Serial Number 2672)

Drawings Series ISI-SK

ISI-SK-001 through 009
ISI-SK-020 through 024
ISI-SK-030 through 038
ISI-SK-040 through 044
ISI-SK-050 through 053

Drawing Series ISID2

ISID2-001	ISID2-023	ISID2-034
ISID2-003A	ISID2-029B	ISID2-035
ISID2-003C	ISID2-029C	ISID2-036A
ISID2-006D	ISID2-029D	ISID2-036B
ISID2-007A	ISID2-029E	ISID2-036C
ISID2-007B	ISID2-030A	ISID2-040A
ISID2-010C	ISID2-031A	ISID2-040D
ISID2-015A	ISID2-031B	ISID2-041A
ISID2-015D	ISID2-031C	ISID2-041B
ISID2-017A	ISID2-033A	ISID2-041C
ISID2-017B	ISID2-033B	ISID2-046
ISID2-019	ISID2-033C	

Drawing Series ISIM2

ISIM2-200	ISIM2-207F	ISIM2-231E	ISIM2-235B	ISIM2-241B
ISIM2-203A	ISIM2-207G	ISIM2-233A	ISIM2-236A	ISIM2-241C
ISIM2-203B	ISIM2-210E	ISIM2-233B	ISIM2-236B	ISIM2-241D
ISIM2-203F	ISIM2-210H	ISIM2-233C	ISIM2-236C	ISIM2-241E
ISIM2-203H	ISIM2-217A	ISIM2-233D	ISIM2-236D	ISIM2-241F
ISIM2-203J	ISIM2-229	ISIM2-233E	ISIM2-236E	ISIM2-241G
ISIM2-203K	ISIM2-230A	ISIM2-233F	ISIM2-236F	ISIM2-241H
ISIM2-206F	ISIM2-230B	ISIM2-233G	ISIM2-236H	ISIM2-241L
ISIM2-206G	ISIM2-230C	ISIM2-233H	ISIM2-236J	ISIM2-241M
ISIM2-206N	ISIM2-230D	ISIM2-234A	ISIM2-240A	ISIM2-246A
ISIM2-206Q	ISIM2-231A	ISIM2-234B	ISIM2-240B	ISIM2-268D
ISIM2-207A	ISIM2-231B	ISIM2-234C	ISIM2-240C	ISIM2-E371
ISIM2-207C	ISIM2-231C	ISIM2-234D	ISIM2-240D	
ISIM2-207E	ISIM2-231D	ISIM2-235A	ISIM2-241A	

Revised Relief Requests for
RR-A14 and RR-A15

(7 Pages Follow)

FIRST ENERGY NUCLEAR OPERATING COMPANY
DAVIS-BESSE UNIT 1
THIRD 10-YEAR INTERVAL
RELIEF REQUEST RR-A14

System/Component(s) for Which Relief is Requested:

Calibration Blocks for Vessels Greater Than 2 Inches in Thickness, except for the Reactor Vessel

Code Requirement:

I-2120 of Appendix I of the 1995 Edition, 1996 Addenda of ASME Section XI requires the ultrasonic examination of vessels, other than the reactor vessel, greater than 2 inches in thickness be conducted in accordance with Article 4 of Section V, as supplemented by Table I-2000-1. Table I-2000-1 specifies that Supplement 1 to Appendix I is applicable to vessels greater than 2 inches in thickness.

Appendix I, Supplement 1(a) requires the material from which calibration blocks are fabricated be one of the following:

(1) a nozzle dropout from the component;

(2) a component prolongation: or

(3) material of the same material specification, product form, and heat treatment condition as one of the materials being joined.

Code Requirement from Which Relief is Requested:

Relief is requested to use Code Case N-639, Alternative Calibration Block Material, when calibration blocks of the same material specification, product form, and heat treatment condition as the material being examined are not available.

Basis for Relief:

The purpose of calibration blocks is to provide notches and holes of known sizes in materials which are acoustically similar to the material being examined. The calibration blocks are used to configure the ultrasonic examination system for the required examination and provide for repeatability of examinations.

The requirements of Appendix I, Supplement 1(a)(3) requires material of the same material specification, product form, and heat treatment condition as one of

the materials being joined for the calibration block material. This requirement does not address the grade or type of material nor the heat treatment of the material. It only addresses the material specification and the heat treatment condition, e.g. quenched and tempered. The material grade or type and heat treatment are more important in determining the acoustic properties of a material than the materials specification and heat treatment condition. This is recognized in ASME Section V, Article V, T542.2.1.1 which requires the basic calibration block be fabricated from the same product form and material specification or equivalent P-Number grouping as the material being examined. ASME Section XI, Appendix III, III-3411(d) also permits the use of calibration blocks of similar chemical analysis, tensile properties, and metallurgical structure when material of the same specification is not available. The use of materials of similar chemical analysis, tensile properties, and metallurgical structure when calibration blocks of the same material specification, product form, and heat treatment condition as the material being examined is not available will provide materials with acoustic properties similar to those being examined.

Relief is request in accordance with 10 CFR 50.55a(a)(3)(i). The use of calibration blocks fabricated from material of similar chemical analysis, tensile properties, and metallurgical structure as the material being examined as permitted by Code Case N-639 will provide an acceptable level of quality and safety.

Alternative Examination:

The requirements of Code Case N-639 will be implemented when calibration blocks of the same material specification, product form, and heat treatment condition as the material being examined are not available for the examination of vessels greater than 2 inches in thickness, except for the Reactor Vessel.

Justification for the Granting of Relief:

Calibration blocks made from material of similar chemical analysis, tensile properties, and metallurgical structure as the material being examined will provide calibration blocks which have acoustic properties similar to the material being examined. Ultrasonic examinations conducted using calibration blocks which are acoustically similar to the material being examined will provide equivalent examinations to those conducted using calibration blocks meeting the requirements of ASME Section XI, Appendix I, Supplement 1(a). The use of the alternative material requirements contained in Code Case N-639 will provide an acceptable level of quality and safety.

Implementation Schedule:

Code Case N-639 will be used during the Third 10-Year Inspection Interval when calibration blocks meeting the requirements of ASME Section XI, Appendix I, Supplement 1(a) are not available.

FIRST ENERGY NUCLEAR OPERATING COMPANY
DAVIS-BESSE UNIT 1
THIRD 10-YEAR INTERVAL
RELIEF REQUEST RR-A15

System/Component(s) for Which Relief is Requested:

Dissimilar Metal Welds with single side access subject to ultrasonic examination with Supplement 10 to Appendix VIII of the 1995 Edition, 1996 Addenda of ASME Section XI.

The following ASME Class 1 dissimilar metal welds will be examined from one side only.

- RC-MK-A67-1-FW105A - Reactor Coolant Pump 2-1 Inlet Nozzle to 28 inch Elbow Weld
- RC-MK-A67-3-FW105B - Reactor Coolant Pump 1-2 Inlet Nozzle to 28 inch Elbow Weld
- RC-MK-A67-2-FW134A - Reactor Coolant Pump 2-2 Inlet Nozzle to 28 inch Elbow Weld
- RC-MK-B67-1-FW134B - Reactor Coolant Pump 1-1 Inlet Nozzle to 28 inch Elbow Weld

Austenitic stainless steel components with single side access subject to ultrasonic examination with Supplement 2 to Appendix VIII of the 1995 Edition, 1996 Addenda of ASME Section XI.

The following ASME Class 1 stainless steel welds will be examined from one side only.

- DH-33A-CCA-4-F6A-FW5 - Decay Heat Valve DH 12 to 12 inch Pipe Weld
- DH-33A-CCA-4-F6A-FW6 - Decay Heat Valve DH 11 to 12 inch Pipe Weld
- CF-33B-CCA-6-3-FW29 - Core Flood Valve CF 30 to 14 inch Elbow Weld
- CF-33B-CCA-6-5B-FW15 - Core Flood Valve CF 31 to 14 inch Elbow Weld

The following ASME Class 2 stainless steel welds will be examined from one side only.

- HP-33C-CCB-2-41-FW31 - High Pressure Injection Valve HP 49 to 2½ inch Pipe Weld
- HP-33C-CCB-2-35-FW22A - High Pressure Injection Valve HP 48 to 2½ inch Pipe Weld
- *DH-33B-GCB-10-21-FW66 - Decay Heat Valve DH 830 to 8 inch Pipe Weld
- *CS-34-GCB-5-2-FW6 - Containment Spray Valve CS 1531 to 8 inch Elbow Weld

- *DH-33A-GCB-7-5-FW20 - Decay Heat Valve DH 1517 to 12 inch Tee Weld
- *DH-33A-GCB-7-6-FW17 - Decay Heat Valve DH 1518 to 12 inch Pipe Weld

* These welds have a wall thickness less than 3/8 inch and are being examined as required by Relief Request RR-B2.

Code Requirement:

Subsection IWB, Table IWB-2500-1, Examination Category B-J, Item No. B9.11 (Circumferential Welds NPS 4 or Larger) of the 1995 Edition, 1996 Addenda of ASME Section XI requires examination of essentially 100 percent of the weld. Figure IWB-2500-8 establishes the examination volume for Code Category B-J circumferential piping welds.

Subsection IWC, Table IWC-2500-1, Examination Category C-F-1, Pressure Retaining Welds in Austenitic Stainless Steel or High Alloy Piping, of the 1995 Edition, 1996 Addenda of ASME Section XI requires examination of essentially 100 percent of the weld. Figure IWC-2500-7 establishes the examination volume for Code Category C-F-1 circumferential piping welds.

Code Case N-460 states that when the entire examination volume or area cannot be examined due to interference by another component or part geometry, a reduction in examination coverage may be accepted provided the reduction in coverage for that weld is less than 10 percent.

10 CFR 50.55a(b)(2)(xvi)(B) requires examinations performed from one side of a ferritic or stainless steel pipe weld must be conducted with equipment, procedures, and personnel that have demonstrated proficiency with single side examinations. To demonstrate proficiency to two sided examinations, the demonstration must be performed to the requirements of Appendix VIII as modified by this paragraph and 10 CFR 50.55a(b)(xv)(A).

10 CFR 50.55a(b)(2)(xv)(A) requires the following examination coverage when applying Supplement 2 and 3 to Appendix VIII of the 1995 Edition, 1996 Addenda of ASME Section XI.

(1) Piping must be examined in two axial directions and when examination in the circumferential direction is required, the circumferential examination must be performed in two directions, provided access is available.

(2) Where examination from both sides is not possible, full coverage credit may be claimed from a single side for ferritic welds. Where examination from both sides is not possible on austenitic welds, full coverage credit from a single side may be claimed only after completing a successful single sided Appendix VIII demonstration using flaws on the opposite side of the weld.

Code Requirement from Which Relief is Requested:

Relief is requested from examining essentially 100% of the examination volume depicted in Figures IWB-2500-8 and IWC-2500-7.

Basis for Relief:

Reactor Coolant Pump to Nozzle Welds

The Reactor Coolant Pump nozzle to elbow welds are dissimilar metal welds. The piping elbows are manufactured from ferritic steel while the Reactor Coolant Pumps are manufactured from cast stainless steel. Appendix VIII, Supplement 10 addresses ferritic to austenitic materials, but does not address ferritic to cast stainless steel welds. The examination of cast stainless steel is not addressed in Appendix VIII. Current technology is not capable of reliably performing ultrasonic examination of cast stainless steels. Therefore, credit can not be taken for examination from the cast side of the weld which limits examination credit to that obtained from the single sided examination from the ferritic piping. As a result the weld is examined by only 3 of the 4 required directions as no scans can be credited from the cast stainless steel side of the weld. As the area of interest within the cast stainless steel is not interrogated, the examination coverage is approximately 40 percent of the required examination volume.

Valve to Piping Welds

The valve to piping welds addressed in this relief request are austenitic stainless steel welds. The valve taper prevents scanning from the valve side of the weld which results in a single side examination from the pipe side of the valve. For single sided examinations, 10 CFR 50.55a(b)(2)(xvi)(B) requires a procedure be qualified using flaws from the opposite side of the weld. There are currently no qualified single side examination procedures that demonstrate equivalency to two-sided examination procedures on austenitic piping welds. Current technology is not capable of reliably detecting or sizing flaws on the far side of an austenitic weld for configurations common to United States nuclear applications. As a result the weld is examined by only 3 of the 4 required directions as no scans can be credited from the valve side of the weld. As the area of interest within the valve is not interrogated, the examination coverage is approximately 40 percent of the required examination volume.

The Performance Demonstrative Initiative (PDI) Program conforms to 10 CFR 50.55a regarding single side access for piping. The PDI Performance Demonstration Qualification Summary (PDQS) certificates for austenitic

piping list the limitation that single side examination is performed on a best effort basis. The best effort qualification is provided in place of a complete single side qualification to demonstrate that the examiners qualification and the subsequent weld examination is based on application of the best available technology.

Relief is request in accordance with 10 CFR 50.55a(a)(3)(ii). Technology is not currently available to qualify examination procedures for cast stainless steel and austenitic stainless steel welds from one side only.

Alternative Examination:

The best available techniques, as qualified through the Performance Demonstration Initiative, will be used from the accessible side of the weld on a best effort basis.

Justification for the Granting of Relief:

There are currently no qualified PDI single side examination procedures that demonstrate equivalency to two-sided examination procedures on austenitic piping or dissimilar ferritic to cast stainless steel welds. Current technology is not capable of reliably detecting or sizing flaws on the far side of an austenitic weld for configurations common to United States nuclear applications making examination from one side of the weld impractical. Examination 3 of the 4 required directions ensures that a portion the examination volume is interrogated which should detect any gross degradation of the weldment.

Implementation Schedule:

The examination of these welds will be scheduled to meet the requirements of Table IWB-2412-1 or Table IWC-2412-1 as applicable to the weld's code class.

Commitment List

The following list identifies those actions committed to by the Davis-Besse Nuclear Power Station (DBNPS) in this document. Any other actions discussed in the submittal represent intended or planned actions by the DBNPS. They are described only for information and are not regulatory commitments. Please notify the Manager - Regulatory Affairs (419-321-8450) at the DBNPS of any questions regarding this document or associated regulatory commitments.

COMMITMENTS	DATE DUE
None	

REV.	DATE	DESCRIPTION	JOR	SBW		BWO		
2	7-25-01	INC. DCN ISI-SK-001-2 PER DDR 00-2285						
1	8/21/00	INC. DCN ISI-SK-001-1 PER DDR 00-1766			"INITIALS ON FILE"	"INITIALS ON FILE"		
0	9/12/89	ISSUED FOR SECOND 10 YEAR INSERVICE INSPECTION INTERVAL	BY	CHK	ENGR	ENGR SUPV	ENG MGR	

TABLE 1 INSERVICE INSPECTION SKETCHES

DRAWING NUMBER	TITLE
ISI-SK-001	INSERVICE INSPECTION SKETCHES - DRAWING INDEX/NOTES
ISI-SK-002	REACTOR VESSEL WELDS
ISI-SK-003	REACTOR VESSEL INLET AND OUTLET NOZZLE DETAILS
ISI-SK-004 SH.1	REACTOR VESSEL CLOSURE HEAD BOLTING DETAILS
ISI-SK-004 SH.2	REACTOR VESSEL CLOSURE HEAD BOLTING DETAILS
ISI-SK-005 SH.1	CONTROL ROD DRIVE HOUSING WELDS AND BOLTING DETAILS
ISI-SK-005 SH.2	CONTROL ROD DRIVE HOUSING WELDS AND BOLTING DETAILS
ISI-SK-005 SH.3	CONTROL ROD DRIVE HOUSING WELDS AND BOLTING DETAILS
ISI-SK-006	REACTOR VESSEL INSTRUMENTATION NOZZLE DETAILS
ISI-SK-007 SH.1	REACTOR VESSEL SUPPORTS
ISI-SK-007 SH.2	REACTOR VESSEL SUPPORTS
ISI-SK-008	REACTOR VESSEL CORE SUPPORT ASSEMBLY
ISI-SK-009 SH.1	REACTOR VESSEL CORE SUPPORT ASSEMBLY BOLTING DETAILS
ISI-SK-009 SH.2	REACTOR VESSEL CORE SUPPORT ASSEMBLY BOLTING DETAILS
ISI-SK-009 SH.3	REACTOR VESSEL CORE SUPPORT ASSEMBLY BOLTING DETAILS
ISI-SK-009 SH.4	REACTOR VESSEL CORE SUPPORT ASSEMBLY BOLTING DETAILS
ISI-SK-009 SH.5	REACTOR VESSEL CORE SUPPORT ASSEMBLY BOLTING DETAILS
ISI-SK-009 SH.6	REACTOR VESSEL CORE SUPPORT ASSEMBLY BOLTING DETAILS
ISI-SK-009 SH.7	REACTOR VESSEL CORE SUPPORT ASSEMBLY BOLTING DETAILS
ISI-SK-020	PRESSURIZER OUTLINE
ISI-SK-021	PRESSURIZER UPPER HEAD NOZZLE DETAILS
ISI-SK-022	PRESSURIZER LOWER HEAD NOZZLE DETAILS
ISI-SK-023	PRESSURIZER BOLTING DETAILS
ISI-SK-024 SH.1	PRESSURIZER SUPPORTS
ISI-SK-024 SH.2	PRESSURIZER SUPPORTS
ISI-SK-030	STEAM GENERATOR 1-1 SHELL AND HEAD WELDS
ISI-SK-031	STEAM GENERATOR 1-2 SHELL AND HEAD WELDS
ISI-SK-032	STEAM GENERATOR 1-1 NOZZLE WELDS
ISI-SK-033	STEAM GENERATOR 1-2 NOZZLE WELDS
ISI-SK-034	STEAM GENERATORS 1-1 AND 1-2 BOLTING DETAILS PRIMARY SIDE
ISI-SK-035 SH.1	STEAM GENERATORS 1-1 AND 1-2 UPPER LATERAL SUPPORTS
ISI-SK-035 SH.2	STEAM GENERATORS 1-1 AND 1-2 UPPER LATERAL SUPPORTS
ISI-SK-036 SH.1	STEAM GENERATORS 1-1 AND 1-2 LOWER SUPPORTS
ISI-SK-036 SH.2	STEAM GENERATORS 1-1 AND 1-2 LOWER SUPPORTS
ISI-SK-037	STEAM GENERATOR 1-1 MAIN FEEDWATER ATTACHMENT WELDS
ISI-SK-038	STEAM GENERATOR 1-2 MAIN FEEDWATER ATTACHMENT WELDS
ISI-SK-040	REACTOR COOLANT PUMP OUTLINE AND BOLTING DETAILS
ISI-SK-041	RCP 1-1-1 AND RCP 1-2-2 PUMP CASE ASSEMBLY
ISI-SK-042	RCP 1-1-2 AND RCP 1-2-1 PUMP CASE ASSEMBLY
ISI-SK-043	REACTOR COOLANT PUMP SUPPORTS
ISI-SK-044 SH.1	REACTOR COOLANT PUMP FLYWHEEL DETAIL
ISI-SK-044 SH.2	REACTOR COOLANT PUMP FLYWHEEL DETAIL
ISI-SK-044 SH.3	REACTOR COOLANT PUMP FLYWHEEL DETAIL
ISI-SK-050	DECAY HEAT COOLERS 1-1 AND 1-2 OUTLINE AND SUPPORTS
ISI-SK-051	HP INJECTION PUMPS 1-1 AND 1-2 OUTLINE AND SUPPORTS
ISI-SK-052 SH.1	HP INJECTION PUMPS 1-1 AND 1-2 PRESSURE RETAINING WELDS AND BOLTING DETAILS
ISI-SK-052 SH.2	HP INJECTION PUMPS 1-1 AND 1-2 PRESSURE RETAINING WELDS AND BOLTING DETAILS
ISI-SK-053	MAIN STEAM VENT VALVES 1CS11A AND 1CS11B WELDS

2

NOTES:

1. ISI SKETCHES ARE NON-DESIGN, PROJECT DRAWINGS THAT ARE USED TO LOCATE THE WELDS AND ITEMS IN ASME SECTION XI, CLASS 1 AND 2 VESSELS, PUMPS AND VALVES THAT REQUIRE INSERVICE INSPECTION. THE ISI SKETCHES IDENTIFY THE COMPONENT, WELD NUMBER OR MARK NUMBER OF THE ITEM, THE DIMENSIONS WHICH ARE USED TO LOCATE THE WELD OR ITEM, WHEN APPROPRIATE, THE TYPE OF EXAMINATION (EXAMPLE: VOLUMETRIC EXAMINATION) AND THE ASME SECTION XI ITEM NUMBER FOR THE EXAMINATION.

2. THE ISI SKETCHES INCLUDE EXAMINATIONS THAT ARE REQUIRED BY ASME SECTION XI AND AUGMENTED EXAMINATIONS. THE EXAMINATIONS THAT ARE SPECIFIED ON THE ISI SKETCHES ARE A RESTATEMENT OF THE EXAMINATION REQUIREMENTS IN THE TOLEDO EDISON ASME SECTION XI INSERVICE INSPECTION PROGRAM PLAN. THE TOLEDO EDISON ASME SECTION XI INSERVICE INSPECTION PROGRAM PLAN SHALL BE USED TO DETERMINE THE SPECIFIC EXAMINATION REQUIREMENTS THAT APPLY FOR EACH COMPONENT AND THEIR SUPPORTS.

3. THE ISI SKETCHES IDENTIFY THE CLASS 1 AND 2 SUPPORTS THAT REQUIRE INSERVICE INSPECTION IN ACCORDANCE WITH SUBSECTION IWF OF ASME SECTION XI, THE BOUNDARIES OF THE SUPPORT AND THE EXAMINATION THAT IS REQUIRED. THE CIVIL DRAWINGS AND VENDOR DRAWINGS THAT ARE REFERENCED ON THE ISI SKETCHES SHALL BE USED TO LOCATE THE MECHANICAL AND WELDED CONNECTIONS TO THE BUILDING STRUCTURE, THE INTERMEDIATE CONNECTIONS AND THE CONNECTIONS TO THE PRESSURE RETAINING COMPONENT, INTEGRAL ATTACHMENT OR INTERVENING ELEMENT (EXAMPLE: REACTOR COOLANT PUMP MOTOR), AS APPLICABLE.

4. FOR ASME SECTION XI, CLASS 3 VESSELS, PUMPS AND VALVES, THE TOLEDO EDISON INSERVICE INSPECTION PROGRAM PLAN REFERENCES THE VENDOR DRAWINGS WHICH ARE TO BE USED TO PERFORM THE INSERVICE INSPECTION OF THE INTEGRAL ATTACHMENT (TABLE IWD-2500-1 OF ASME SECTION XI) AND THE INSERVICE INSPECTION OF THE COMPONENT SUPPORT (SUBSECTION IWF OF ASME SECTION XI).

5. THE ISI SKETCHES SHALL NOT BE USED FOR CONFIGURATION CONTROL. THE CIVIL DRAWINGS AND VENDOR DRAWINGS THAT ARE REFERENCED ON THE ISI SKETCHES SHALL BE USED TO DETERMINE THE SPECIFIC CONFIGURATION AND DIMENSIONS OF THE COMPONENT AND THEIR SUPPORTS.

SCALE N.T.S.	DESIGNED	DRAWN CB	DATE 7-10-89

DAVIS-BESSE NUCLEAR POWER STATION
UNIT NO. 1
THE TOLEDO EDISON COMPANY

0

INSERVICE INSPECTION SKETCHES
DRAWING INDEX/NOTES

DRAWING NO.	REV.
ISI-SK-001	2

DB:05-29-01 DFN=J:/ISI/ISISK001.DGN

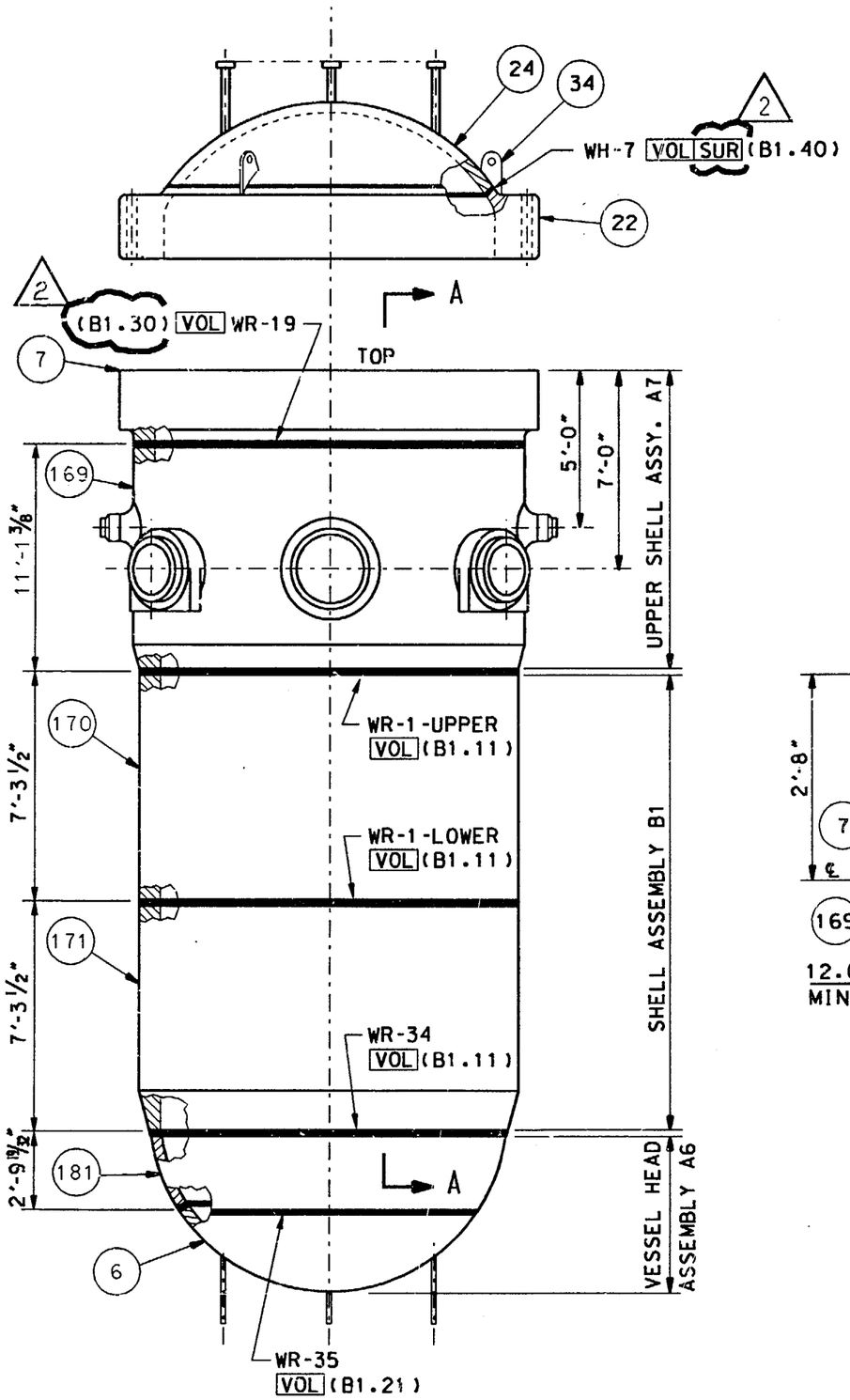

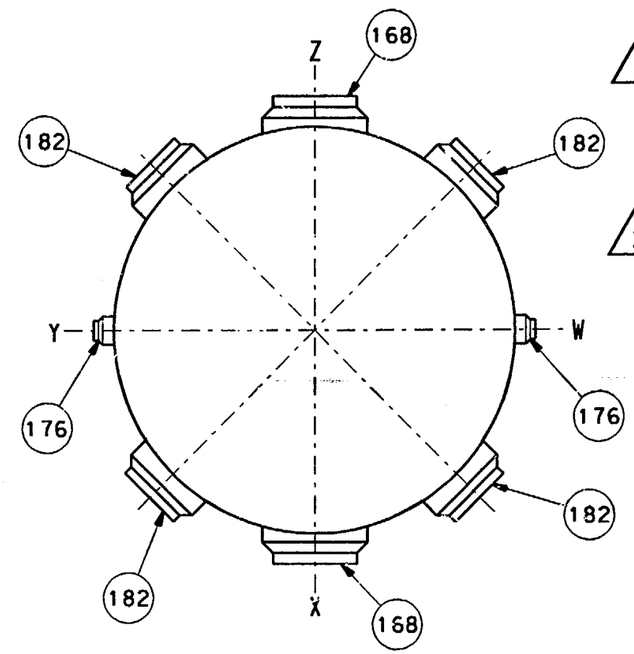

PLAN VIEW

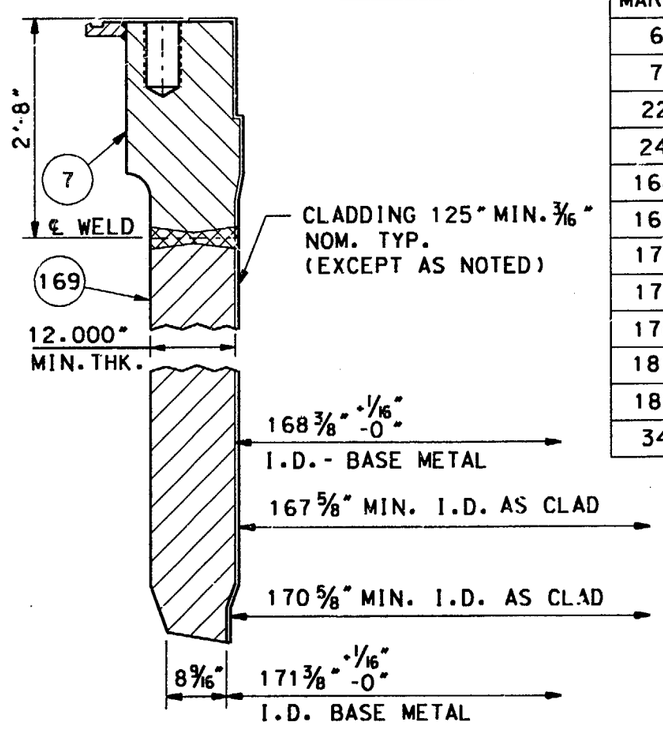

SECTION A-A

LEGEND:

2 VOL - VOLUMETRIC EXAMINATION
SUR - SURFACE EXAMINATION

NOTES:

1. THE WELD IDENTIFICATION NUMBERS ARE PRECEEDED BY "RPV-"

2

REFERENCE DRAWINGS:

B&W 154616E UPPER SHELL ASSEMBLY (TED# 7749-M-503-220)
B&W 154617E SHELL ASSEMBLY AND HOOD
B&W 154622E RADIOGRAPHIC OUTLINE (TED# 7749-M-503-216)
B&W 154623E VESSEL HEAD ASSEMBLY (TED# 7749-M-503-215)

MARK #	DESCRIPTION	MATERIAL
6	BOTTOM HEAD	SA 533 GRB
7	UPPER SHELL FLANGE	A 508 CL2
22	CLOSURE HEAD FLANGE	A 508 CL2
24	CLOSURE HEAD CENTER DISC	SA 533 GRB
168	36" DIA. OUTLET NOZZLE (2)	A 508 CL2
169	UPPER SHELL FORGING	A 508 CL2
170	INTER. SHELL FORGING	A 508 CL2
171	LOWER SHELL FORGING	A 508 CL2
176	14" DIA. CORE FLOODING NOZZLE (2)	A 508 CL2
181	TRANSITION PIECE	A 508 CL2
182	28" DIA. INLET NOZZLE (4)	A 508 CL2
34	LIFTING LUG - CLOSURE HEAD	SA 533 GRB

SCALE N.T.S.	DESIGNED	DRAWN WME	DATE 5-3-89

DAVIS-BESSE NUCLEAR POWER STATION
UNIT NO. 1 — Q
THE TOLEDO EDISON COMPANY

REACTOR VESSEL WELDS
CONTAINMENT BUILDING

DRAWING NO.	REV.
ISI-SK-002	2

REV.	DATE	DESCRIPTION
2	11/30/92	INC. DCN ISI-SK-002-1 FOR DCR 91-0011
1	9-20-90	ISSUED FOR SECOND 10 YEAR INSERVICE INSPECTION INTERVAL

BY	CHK	ENGR	ENGR SUPV	ENG MGR
JFS	SJS	"INITIALS ON FILE"		

DB DATE: 08-29-92 DFN=OS1:[55,7]ISISK002.DGN

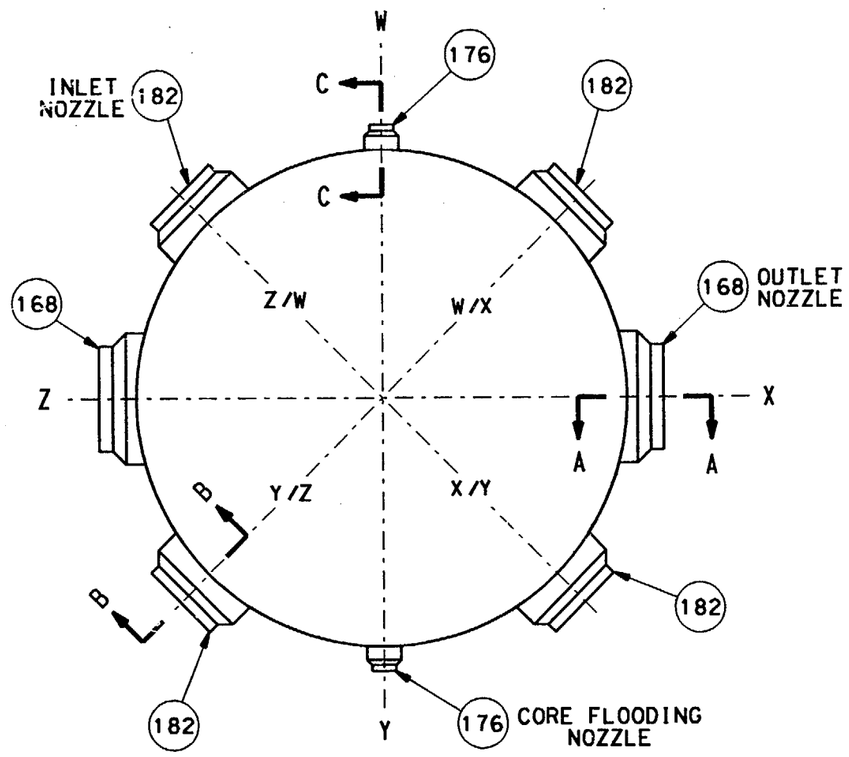

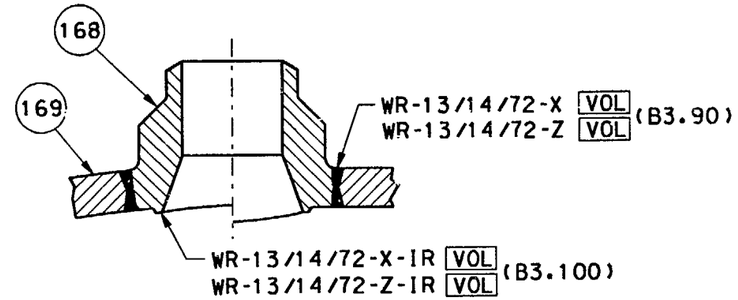

SECTION A-A

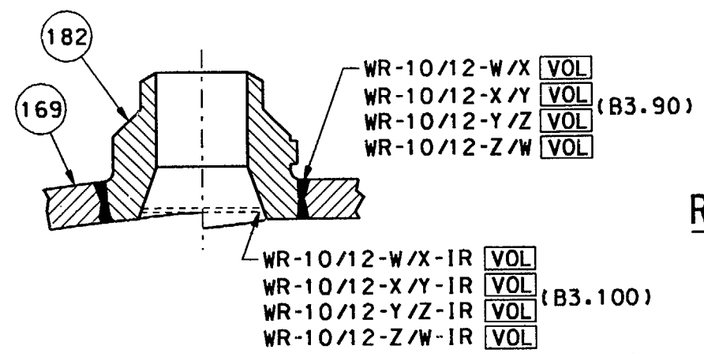

SECTION B-B

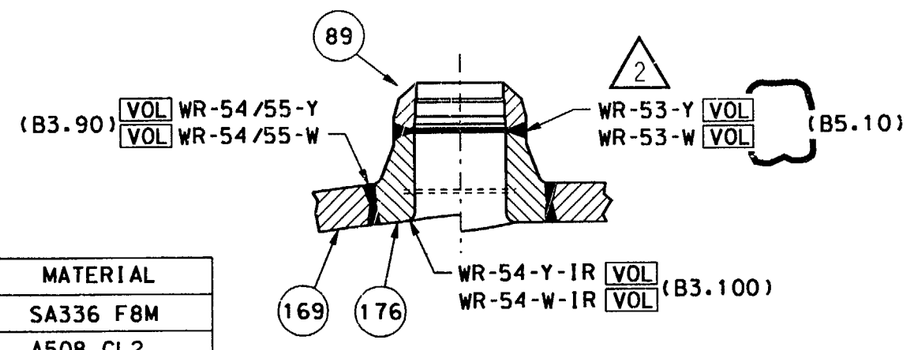

SECTION C-C

LEGEND:

VOL - VOLUMETRIC EXAMINATION

2

NOTES:

1. THE WELD IDENTIFICATION NUMBERS ARE PRECEEDED BY "RPV-"
2. WELDS WR-53-Y AND WR-53-W DO NOT REQUIRE A SURFACE EXAMINATION. SEE RELIEF REQUEST RR-A1.

2

REFERENCE DRAWINGS:

B&W 154622E RADIOGRAPHIC OUTLINE (TED# 7749-M-503-216)

B&W 154618E CORE FLOODING NOZZLE (TED# 7749-M-503-219)

B&W 154619E DETAIL AND SUBASSEMBLY OUTLET NOZZLE (TED# 7749-M-503-218)

B&W 154620E DETAIL AND SUBASSEMBLY INLET NOZZLE (TED# 7749-M-503-217)

MARK #	DESCRIPTION	MATERIAL
89	CORE FLOODING NOZZLE SAFE END (2)	SA336 F8M
168	36" DIA. OUTLET NOZZLE (2)	A508 CL2
169	UPPER SHELL FORGING	A508 CL2
176	14" DIA. CORE FLOODING NOZZLE (2)	A508 CL2
182	28" DIA. INLET NOZZLE (4)	A508 CL2

REV.	DATE	DESCRIPTION
2	[illegible]	INC. DCN ISI-SK-003-1 FOR DCR 91-0011
1	9-20-90	ISSUED FOR SECOND 10 YEAR INSERVICE INSPECTION INTERVAL

JFS	"INITIALS ON FILE"	ENG MGR
BY	CHK	ENGR	ENGR SUPV

SCALE N.T.S.	DESIGNED	DRAWN WME	DATE 5-3-89

DAVIS-BESSE NUCLEAR POWER STATION
UNIT NO. 1
THE TOLEDO EDISON COMPANY

Q

REACTOR VESSEL INLET AND OUTLET NOZZLE DETAILS
CONTAINMENT BUILDING

DRAWING NO.	REV.
ISI-SK-003	2

DB DATE: 08-29-92 DFN=OS1:[55.7]ISISK003.DGN

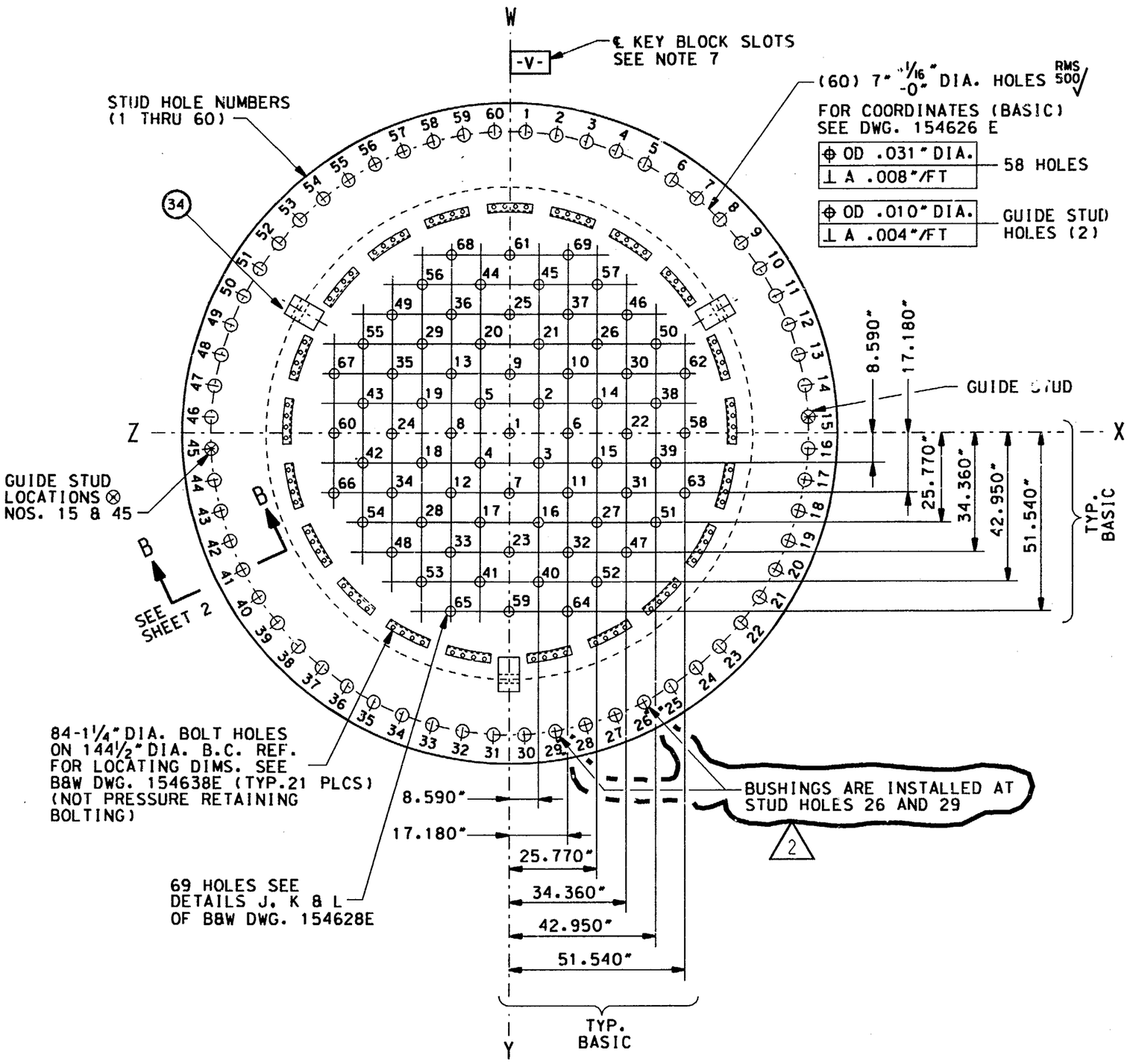

KEY PLAN

NOTES:

1. FOR EXAMINATION REQUIREMENTS AND NOTES. SEE SHEET 2 OF THIS DRAWING.

REFERENCE DRAWINGS:

B&W 154626E CLOSURE HEAD FLANGE

B&W 154628E CLOSURE HEAD SUBASSEMBLY (TED# 7749-M-503-212)

B&W 154634E DETAIL STUD, NUT AND WASHER (TED# 7749-M-503-83)

B&W 154638E SERVICE STRUCTURE SUPPORT AND MOUNTING FLANGE

SCALE N.T.S.	DESIGNED	DRAWN WME	DATE 5-3-89

DAVIS-BESSE NUCLEAR POWER STATION
UNIT NO. 1
THE TOLEDO EDISON COMPANY

Q

REACTOR VESSEL CLOSURE HEAD
BOLTING DETAILS
CONTAINMENT BUILDING

DRAWING NO.	REV.
ISI-SK-004 SHEET 1	2

REV.	DATE	DESCRIPTION
2	8/30/92	INC. DCN ISI-SK-004-1 FOR DCR 91-0011
1	9-20-90	ISSUED FOR SECOND 10 YEAR INSERVICE INSPECTION INTERVAL

BY	CHK	ENGR	ENGR SUPV	ENG MGR
JFS	SBW 11/5		"INITIALS ON FILE"	

DB DATE: 08-29-92 DFN=OS1:[55.7]ISI04SH1.DGN

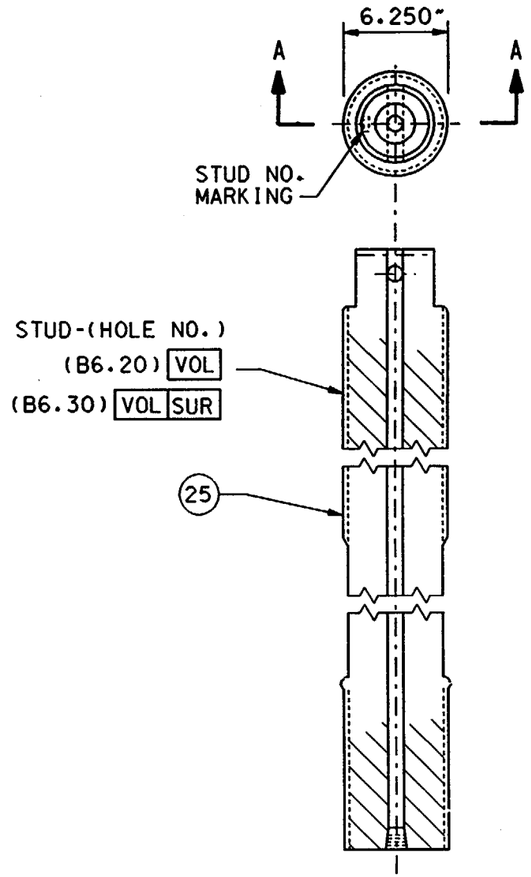

SECTION A-A
CLOSURE STUD

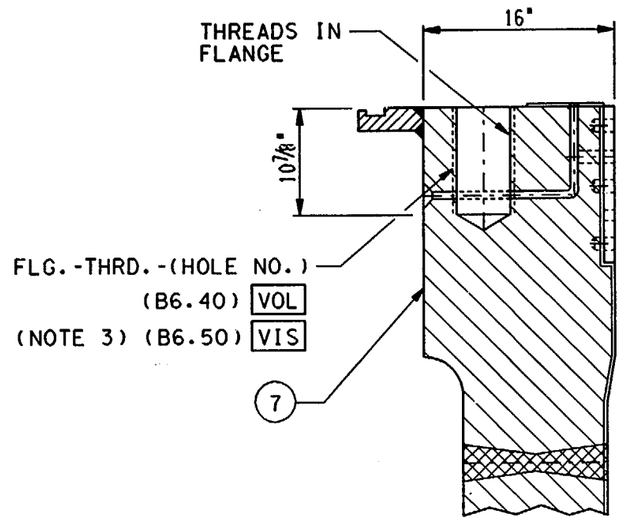

SECTION B-B

LEGEND:

VOL - VOLUMETRIC EXAMINATION

SUR - SURFACE EXAMINATION

VIS - VISUAL (VT-1) EXAMINATION

NOTES:

1. THE EXAMINATION IDENTIFICATION NUMBERS ARE PRECEEDED BY "RPV-" AND THE HOLE NUMBERS ARE 1 THRU 60.
2. THE CLOSURE STUDS SHALL BE SUBJECTED TO:
   A. VOLUMETRIC EXAMINATION AND SURFACE EXAMINATION WHEN REMOVED: OR
   B. VOLUMETRIC EXAMINATION WHEN IN-PLACE.
3. BUSHINGS ARE INSTALLED AT STUD HOLES 26 AND 29.

MARK NO.	DESCRIPTION	MATERIAL
7	UPPER SHELL FLANGE	A508 CL2
14	CONVEX WASHER (60)	A540 GR23
25	STUD (60)	A540 GR23
26	NUT (60)	A540 GR23
27	CONCAVE WASHER (60)	A540 GR23

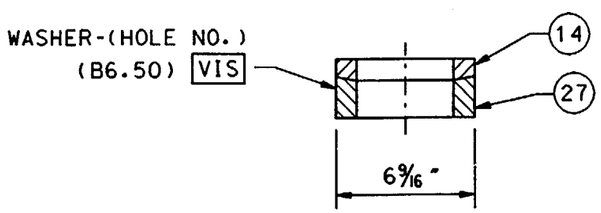

SPHERICAL WASHER

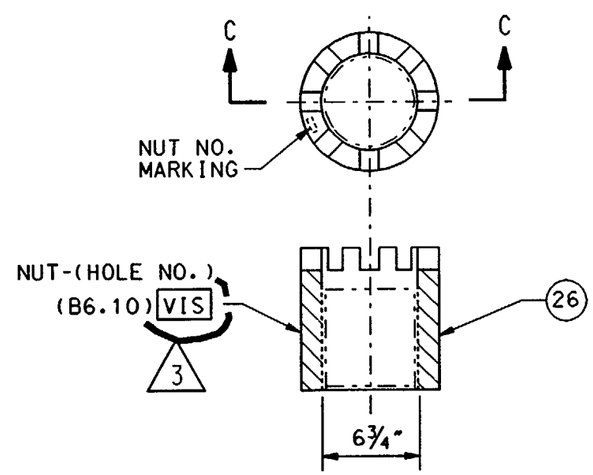

SECTION C-C
CLOSURE NUT

SCALE N.T.S	DESIGNED	DRAWN WME	DATE 5-3-89

DAVIS-BESSE NUCLEAR POWER STATION
UNIT NO. 1
THE TOLEDO EDISON COMPANY

Q

REACTOR VESSEL CLOSURE HEAD
BOLTING DETAILS
CONTAINMENT BUILDING

DRAWING NO.	REV.
ISI-SK-004 SHEET 2	3

DB DATE: 07-27-00 DFN=J:/ISI/ISI04SH2.DGN

REV.	DATE	DESCRIPTION
3	8-21-00	INC. DCN ISI-SK-004-3 PER DDR 00-1766
2	9/30/92	INC. DCN ISI-SK-0004-2 FOR DCR 91-0011
1	9-20-90	ISSUED FOR SECOND 10 YEAR INSERVICE INSPECTION INTERVAL

BY	CHK	ENGR	ENGR SUPV	ENG MGR
JOR	SBU	"INITIALS ON FILE"	"INITIALS ON FILE"	

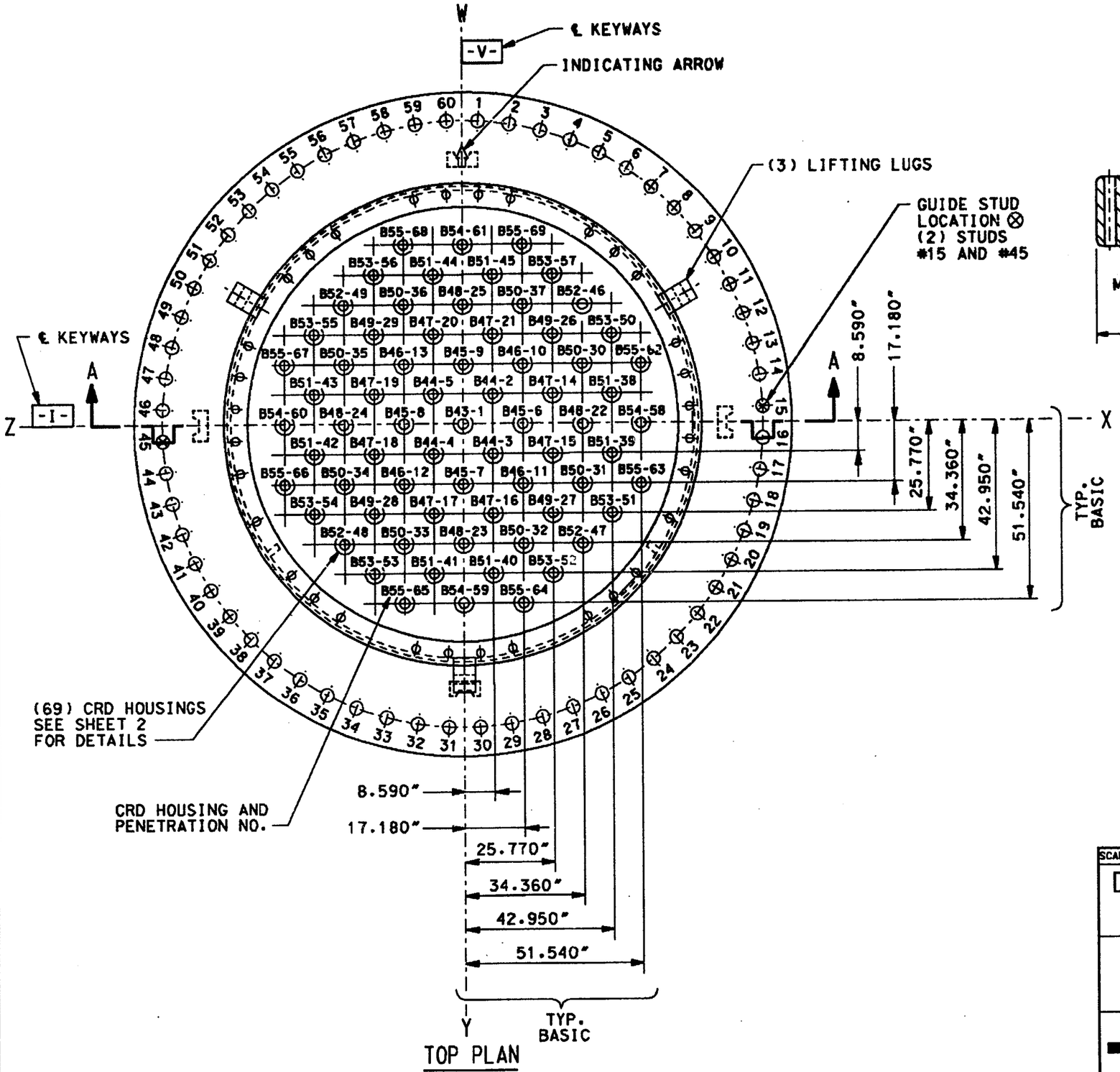

TOP PLAN

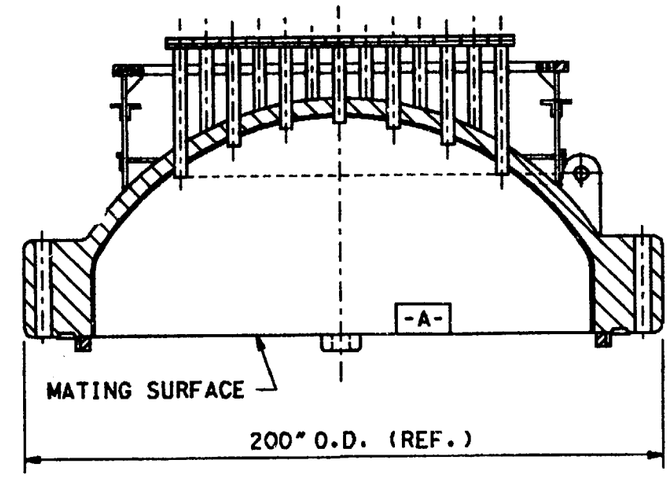

SECTION A-A
CLOSURE HEAD ASSEMBLY A-22

NOTES:

1. FOR EXAMINATION REQUIREMENTS AND NOTES, SEE SHEET 2 OF THIS DRAWING.

REFERENCE DRAWINGS:

B&W 154631E CLOSURE HEAD ASSEMBLY (TED #7749-M-503-127)

B&W 154632E CONTROL ROD MECHANISM HOUSING (TED #7749-M-503-213)

SCALE N.T.S	DESIGNED	DRAWN WME	DATE 5-3-89

DAVIS-BESSE NUCLEAR POWER STATION
UNIT NO. 1
THE TOLEDO EDISON COMPANY

Q

CONTROL ROD DRIVE HOUSING WELDS AND BOLTING DETAILS
CONTAINMENT BUILDING

DRAWING NO.	REV.
ISI-SK-005 SHEET 1 OF 2	0

REV.	DATE	DESCRIPTION
0	9/12/89	ISSUED FOR SECOND 10 YEAR INSERVICE INSPECTION INTERVAL

BY	CHK	ENGR	ENGR SUPV	ENG MGR
WME	PJC	RB	LLC/EVC	

DEN=DS1:[55.71]SI05SH1.DGN

HOUSING ASSY. NO.	DB NO.	HOUSING ASSY. NO.	DB NO.
B43-1	H8	B44-3	C9
B44-2	G7	B44-5	K7
B44-4	K9	B45-7	H10
B45-6	F8	B45-9	H6
B45-8	L8	B46-11	F10
B46-10	F6	B46-13	L6
B46-12	L10	B47-15	E9
B47-14	E7	B47-17	K11
B47-16	G11	B47-19	M7
B47-18	M9	B47-21	C5
B47-20	K5	B48-23	H12
B48-22	D8	B48-25	H4
B48-24	N8	B49-27	E11
B49-26	E5	B49-29	M5
B49-28	M11	B50-31	D10
B50-30	D6	B50-33	L12
B50-32	F12	B50-35	N6
B50-34	N10	B50-37	F4
B50-36	L4	B51-39	C9
B51-38	C7	B51-41	K13
B51-40	G13	B51-43	O7
B51-42	O9	B51-45	G3
B51-44	R3	B52-47	D12
B52-46	D4	B52-49	N4
B52-48	N12	B53-51	C11
B53-50	C5	B53-53	M13
B53-52	E13	B53-55	O5
B53-54	O11	B53-57	E3
B53-56	M3	B54-59	H14
B54-58	B8	B54-61	H2
B54-60	P8	B55-63	B10
B55-62	B6	B55-65	L14
B55-64	F14	B55-67	P6
B55-66	P10	B55-69	F2
B55-68	L2		

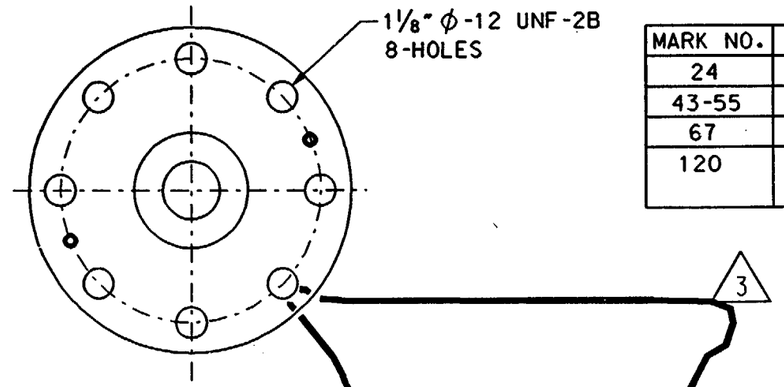

PLAN VIEW

MARK NO.	DESCRIPTION	MATERIAL
24	CLOSURE HEAD	SA533 GRB
43-55	CONTROL ROD HOUSING BODY (69)	SB167 INCONEL
67	CONTROL ROD HOUSING ADAPTER (69)	A182 F304
120	CONTROL ROD HOUSING FLANGE RING (2 SEGMENTS) (138)	SA320L-4-3 CL5

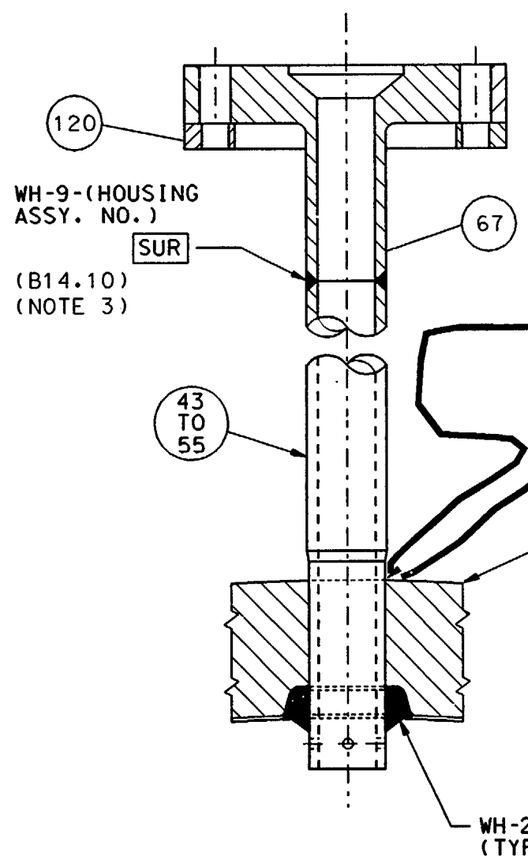

HOUSING AT CENTERLINE OF VESSEL

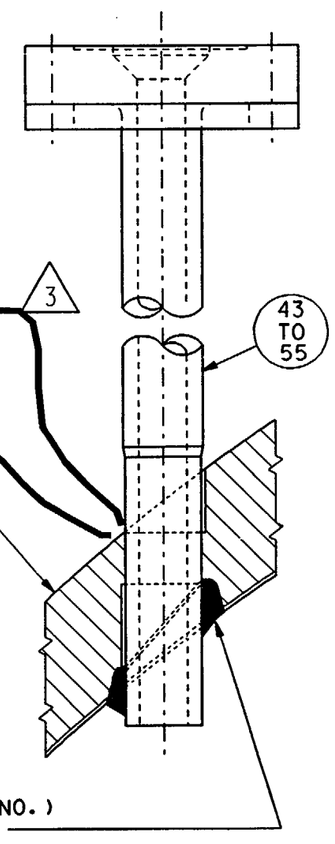

HOUSING AT OUTERMOST PENETRATION

NOTES:

1. THE EXAMINATION IDENTIFICATION NUMBERS ARE PRECEEDED BY "RPV-CRD- ".
2. DELETED. 3
3. A MINIMUM OF 10% OF THE PERIPHERAL CRD NOZZLE AND MOTOR TUBE WELDS SHALL RECEIVE A SURFACE EXAMINATION. 3
4. DELETED
5. THE REACTOR VESSEL HEAD TO HOT LEG VENT LINE IS CONNECTED TO CRD HOUSING ASSEMBLY NO. B47-14.
6. SIXTY-ONE OF THE SIXTY-NINE CRD NOZZLES HAVE CRD MECHANISMS INSTALLED.

LEGEND:

SUR - SURFACE EXAMINATION

VIS - VISUAL (VT-1) EXAMINATION

SCALE N.T.S.	DESIGNED	DRAWN WME	DATE 5-3-89

DAVIS-BESSE NUCLEAR POWER STATION
UNIT NO. 1
THE TOLEDO EDISON COMPANY

Q

CONTROL ROD DRIVE HOUSING WELDS AND BOLTING DETAILS
CONTAINMENT BUILDING

DRAWING NO.	REV.
ISI-SK-005 SHEET 2	3

DB DATE: 07-27-00 DFN=J:/ISI/ISI05SH2.DGN

REV.	DATE	DESCRIPTION
3	8-21-00	INC. DCN ISI-SK-005-6 PER DDR 00-1766
1	9-20-90	ISSUED FOR SECOND 10 YEAR INSERVICE INSPECTION INTERVAL

"INITIALS ON FILE"

ENG MGR	
ENGR SUPV	
ENGR	
CHK	
BY	JOR

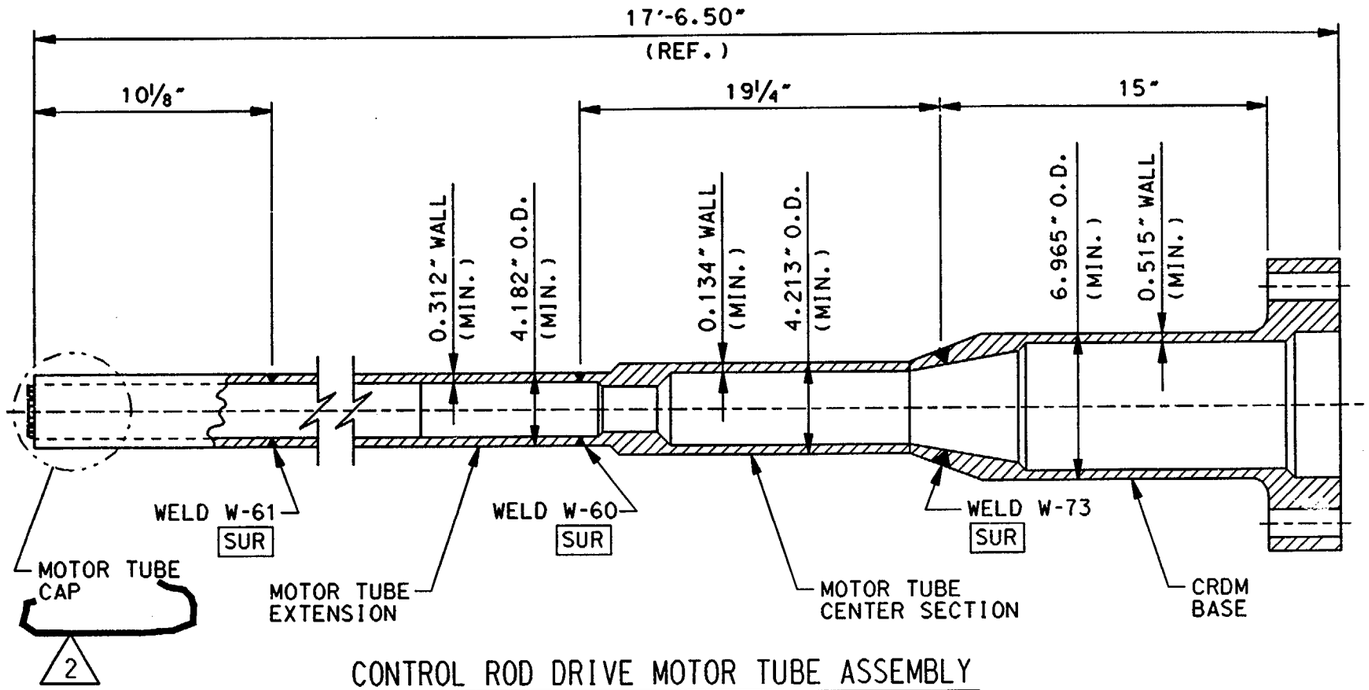

CONTROL ROD DRIVE MOTOR TUBE ASSEMBLY

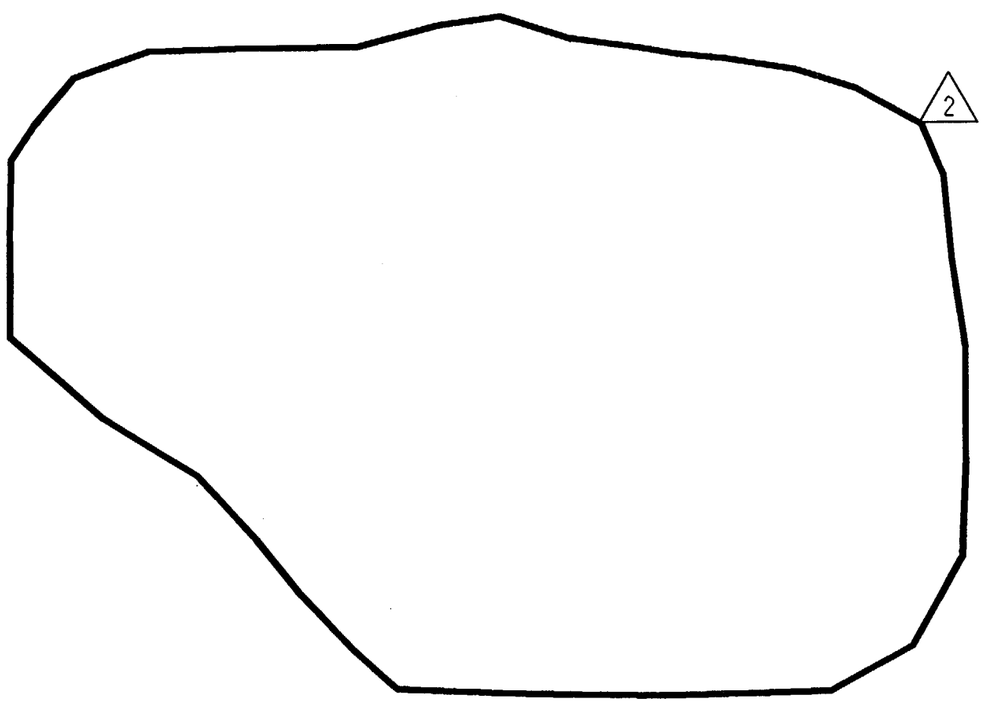

NOTES:

1. FOR NOTES SEE DWG. ISI-SK-005 SH.2.

LEGEND:

2 SUR - SURFACE EXAMINATION

SCALE N.T.S.	DESIGNED	DRAWN JFS	DATE 08-31-92

DAVIS-BESSE NUCLEAR POWER STATION
UNIT NO. 1
THE TOLEDO EDISON COMPANY

Q

CONTROL ROD DRIVE HOUSING WELDS AND BOLTING DETAILS
CONTAINMENT BUILDING

DRAWING NO.	REV.
ISI-SK-005 SHEET 3	2

DB DATE: 07-28-00 DFN=J:/ISI/ISI05SH3.DGN

REV.	DATE	DESCRIPTION	BY	CHK	ENGR	ENGR SUPV	ENG MGR
2	8-21-00	INC. DCN ISI-SK-005-7 PER DDR 00-1766	JOR	"INITIALS ON FILE"			
1	7-7-93	INC. DCN ISI-SK-005-5 FOR RFA 93-0254		"INITIALS ON FILE"			
0	09-22-92	INC. DCN ISI-SK-005-4 FOR RFA 92-0232					

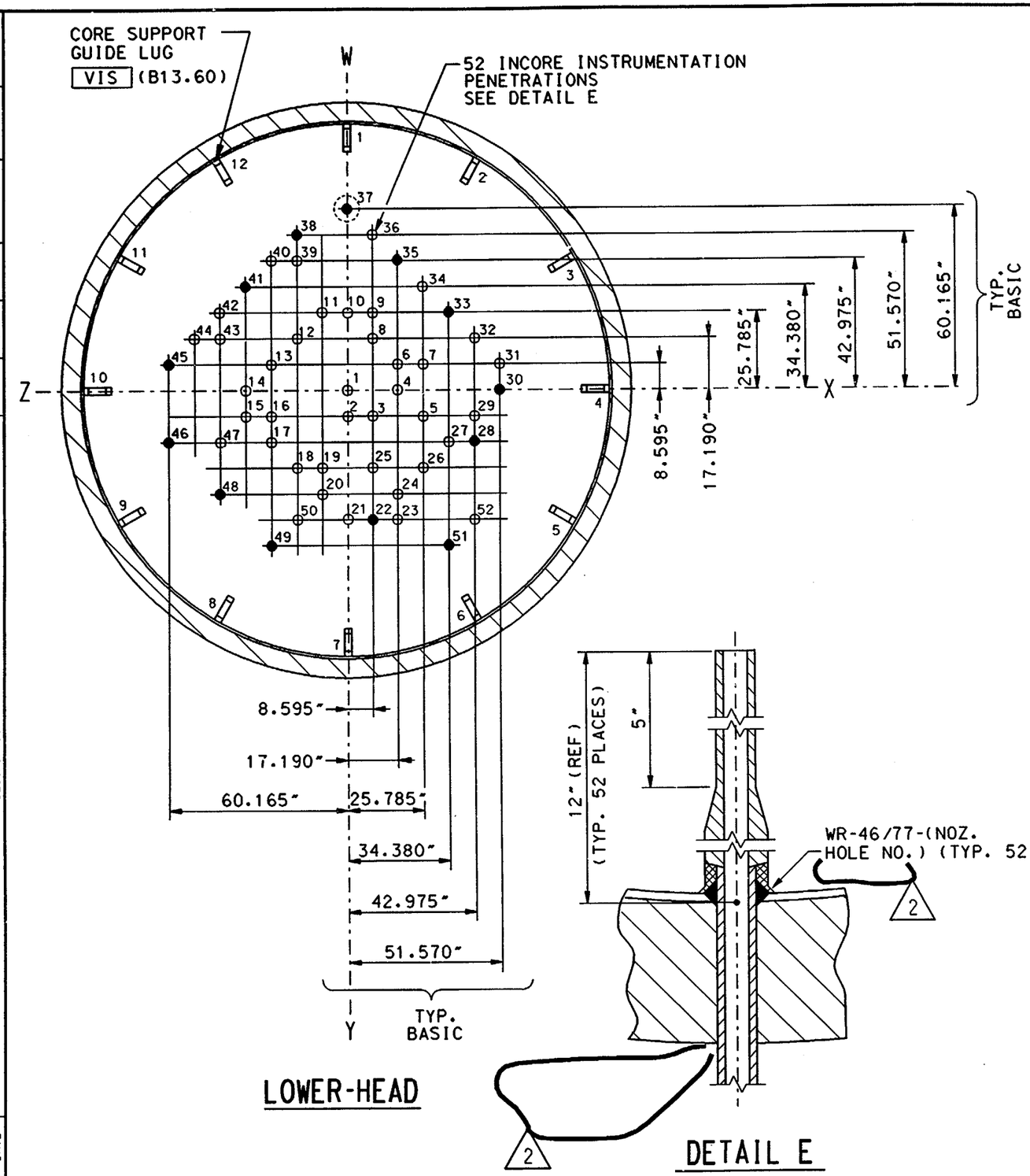

HOLE NO.		NOZZ. MK. NO.
1		186
2	3	187
4	6	
8		
5	7	183
9	10	
11	12	
13	4	
15	16	
17	18	
19	20	
25	26	
21	22	184
23	24	
27	28	
29	32	
33	34	
35	39	
40	41	
42	43	
47	50	
30	31	188
36	37	
38	44	
45	46	
48	49	
51	52	

LEGEND:

VIS - VISUAL (VT-3) EXAMINATION

NOTES:

1. DELETED
2. DELETED
3. EXAMINATIONS ARE DEFERABLE TO THE END OF THE INSPECTION INTERVAL.
4. THE CORE SUPPORT GUIDE LUGS ARE NUMBERED 1 THRU 12 STARTING AT THE W AXIS.

REFERENCE DRAWINGS:

B&W 136457E REACTOR VESSEL DETAILS SHEET 2. (TED #7749-M-503-95)

B&W 109711D MODIFIED INSTRUMENTATION NOZZLE DETAIL

B&W 154624E INSTRUMENTATION NOZZLE DETAIL AND ASSEMBLY (TED #7749-M-503-214)

B&W 154720E MODIFIED INSTRUMENTATION NOZZLE (TED #7749-M-503-224)

REV.	DATE	DESCRIPTION
2	BZ/AU	INC. DCN ISI-SK-006-2 PER DDR 00-1766
1	5/31/96	INC. DCN ISI-SK-006-1 PER DDR 95-2486
0	9/12/89	ISSUED FOR SECOND 10 YEAR INSERVICE INSPECTION INTERVAL

BY	CHK	ENGR	ENGR SUPV	ENG MGR
JOR	SBW		MWA	
INITIALS ON FILE	INITIALS ON FILE			

SCALE N.T.S. | DESIGNED | DRAWN WME | DATE 5-3-89

DAVIS-BESSE NUCLEAR POWER STATION
UNIT NO. 1
THE TOLEDO EDISON COMPANY

0

REACTOR VESSEL INSTRUMENTATION NOZZLE DETAILS
CONTAINMENT BUILDING

DRAWING NO. ISI-SK-006 | REV. 2

DB 07-28-00

DFN=/DBNPS/ISI/ISISK006.DGN

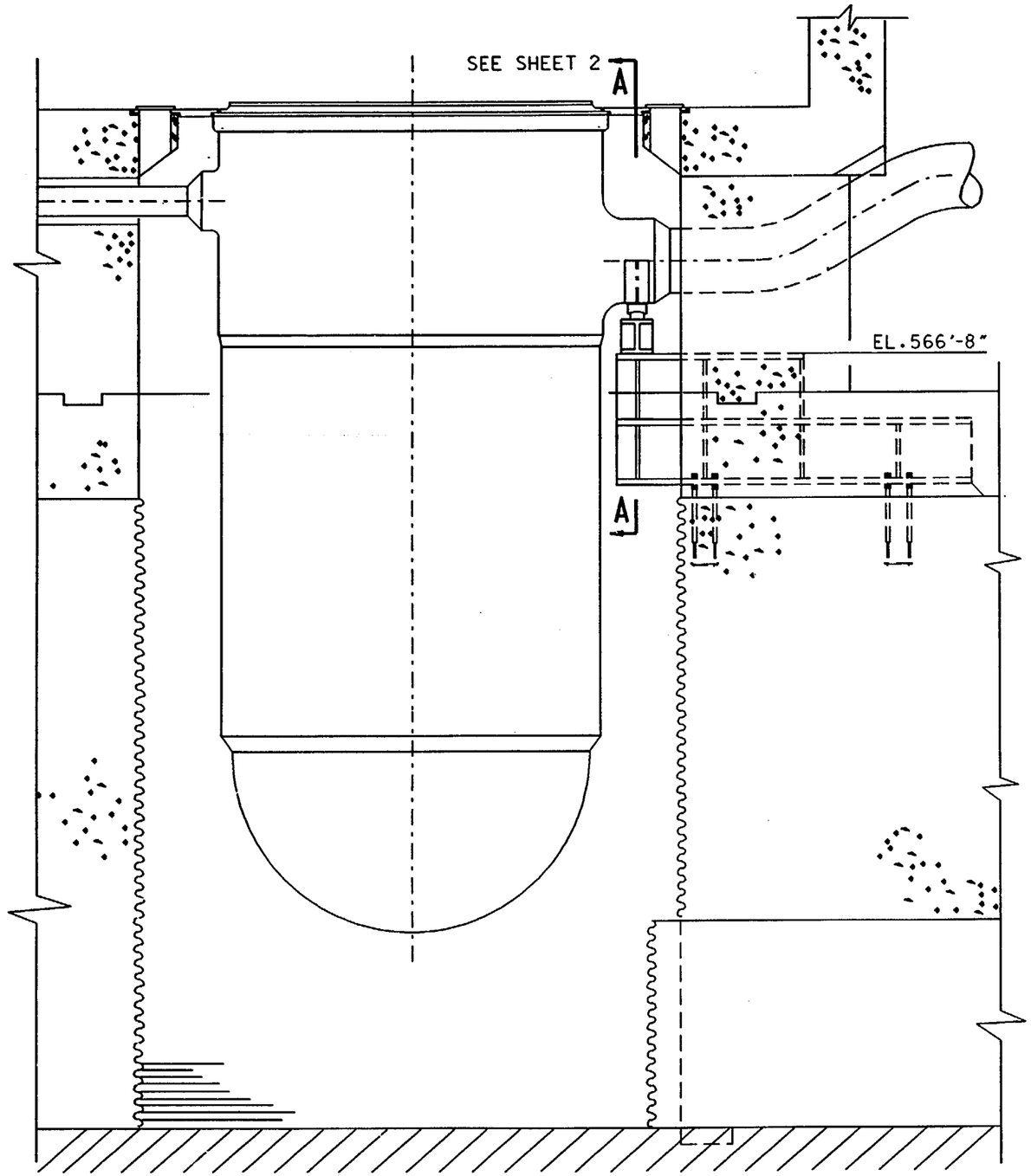

NOTES:

1. A VT-3 EXAMINATION SHALL BE PERFORMED ON EACH OF THE FOUR REACTOR VESSEL SUPPORTS. THE ASME SECTION XI NUMBER IS F1.40. (3)

2. THE REACTOR VESSEL SUPPORTS ARE LOCATED AT EACH OF THE FOUR 28 IN. DIA. INLET NOZZLES. REFER TO DRAWING ISI-SK-003.

REFERENCE DRAWINGS:

B&W 154639E REACTOR VESSEL SUPPORT ASSY. AND DETAILS. (TED #7749-M-503-49)

C-175 REACTOR BEAM-SUPPORT DETAILS, SHEET 1.

B&W 154620E DETAIL AND SUB ASSY. INLET NOZZLE (TED #7749-M-503-217)

REV.	DATE	DESCRIPTION
3	8-2-00	INC. DCN ISI-SK-007-2 PER DCR 00-1766
2	9-30-92	INC. DCN ISI-SK-007-1 FOR DCR 91-0011
1	9-20-90	ISSUED FOR SECOND 10 YEAR INSERVICE INSPECTION INTERVAL

JOB	BY	CHK	ENGR	ENGR SUPV	ENG MGR
	SBW	"INITIALS ON FILE"	"INITIALS ON FILE"		

SCALE N.T.S.	DESIGNED	DRAWN CB	DATE 5-26-89

DAVIS-BESSE NUCLEAR POWER STATION
UNIT NO. 1
THE TOLEDO EDISON COMPANY

0

REACTOR VESSEL SUPPORTS

DRAWING NO.	REV.
ISI-SK-007 SHEET 1	3

DB DATE: 07-28-00 DFN=J:/ISI/ISI07SH1.DGN

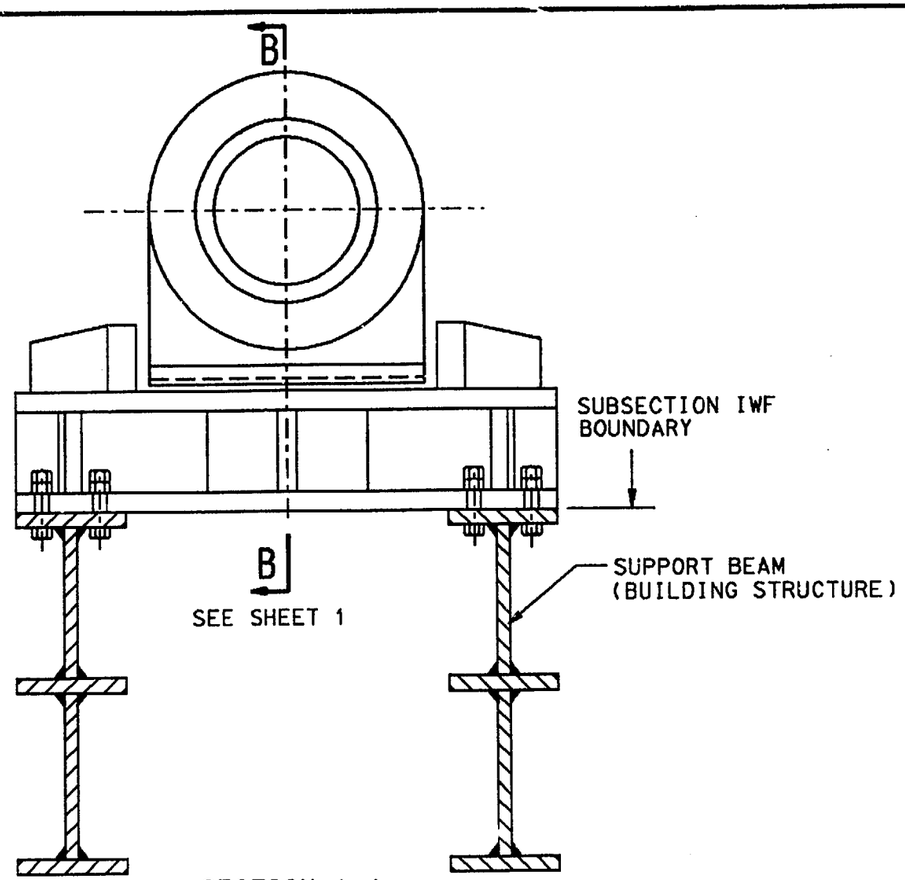

SECTION A-A

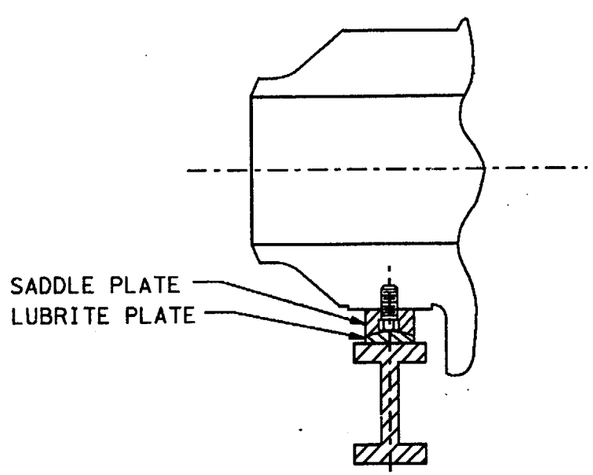

SECTION B-B

NOTES:

1. FOR GENERAL NOTES AND REFERENCES SEE SHEET 1.

REV.	DATE	DESCRIPTION
0	9/20/89	ISSUED FOR SECOND 10 YEAR INSERVICE INSPECTION INTERVAL

CB	BY		
PJC	CHK		
RCB	ENGR	LLC/EVC	ENGR SUPV
			ENG MGR

SCALE N.T.S.	DESIGNED	DRAWN CB	DATE 5-3-89

DAVIS-BESSE NUCLEAR POWER STATION
UNIT NO. 1
THE TOLEDO EDISON COMPANY

Q

REACTOR VESSEL
SUPPORTS

DRAWING NO.	REV.
ISI-SK-007 SHEET 2 OF 2	0

DFN=QS1:[55,7]ISI07SH2.DGN

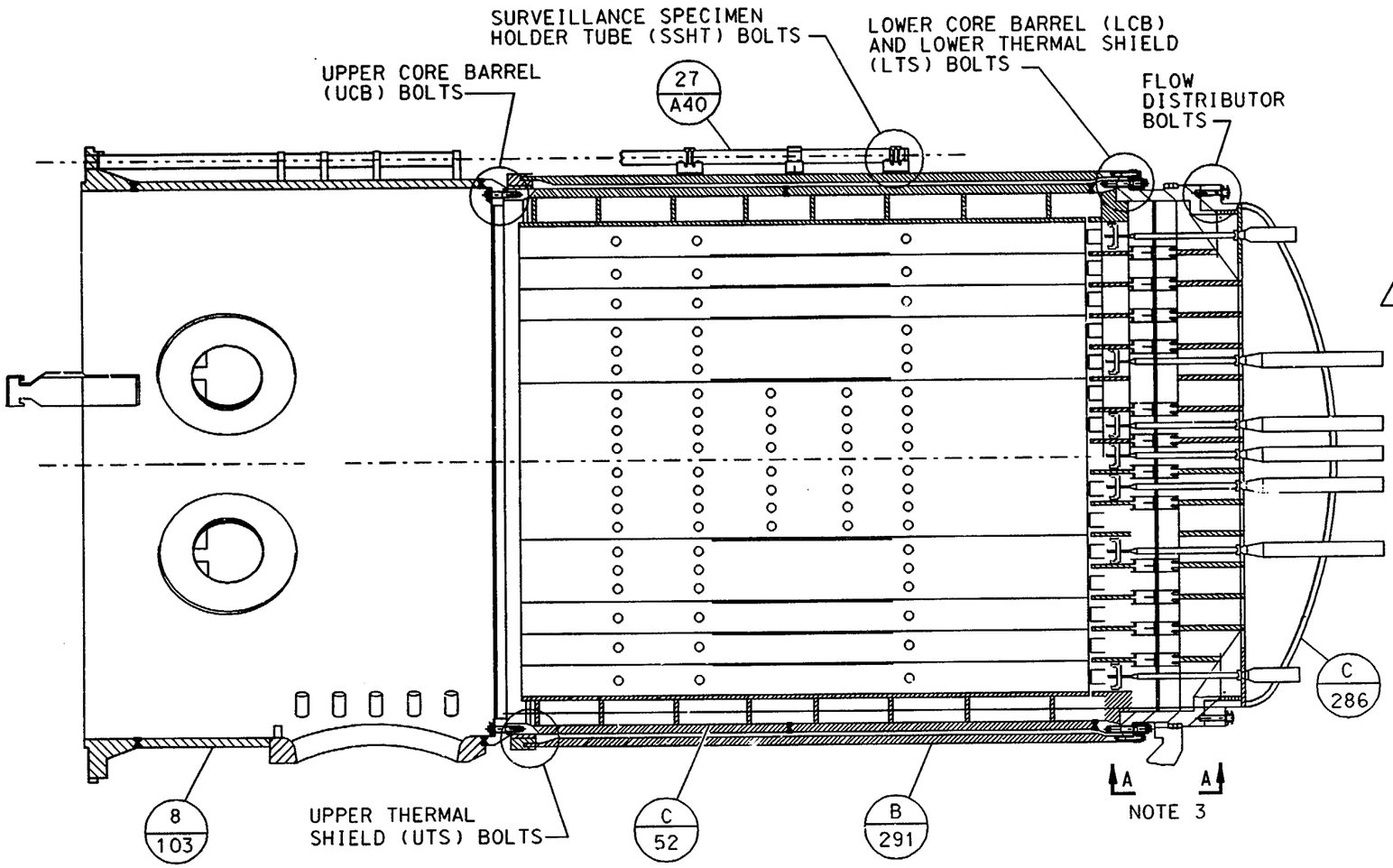

NOTES:

1. A VT-3 EXAMINATION OF THE CORE SUPPORT ASSEMBLY (EXAMINATION CATEGORY B-N-3) SHALL BE PERFORMED ONCE DURING EACH 10 YEAR INSPECTION INTERVAL. THE VT-3 EXAMINATION SHALL BE PERFORMED AFTER THE CORE SUPPORT ASSEMBLY HAS BEEN REMOVED FROM THE REACTOR VESSEL.
2. DELETED. (1)
3. VIEW A-A IS SHOWN ON DRAWING ISI-SK-009 SHEET 7.

REFERENCE DRAWINGS:

B&W 27123F CORE BARREL ASSEMBLY (TED# 7749-M-503-166)

ITEM	QTY.	DRAWING NUMBER
UPPER CORE BARREL BOLTS	120	ISI-SK-009 SHEET 1 DETAIL A
UPPER THERMAL SHIELD BOLTS	60	ISI-SK-009 SHEET 2 DETAIL B
LOWER CORE BARREL BOLTS	108	ISI-SK-009 SHEET 3 DETAIL C
LOWER THERMAL SHIELD BOLTS	96	ISI-SK-009 SHEET 3 DETAIL C
FLOW DISTRIBUTOR BOLTS	96	ISI-SK-009 SHEET 4 DETAIL D
SURVEILLANCE SPECIMEN HOLDER TUBE BOLTS	72	ISI-SK-009 SHEET 5 DETAIL E
VENT VALVE BOLTS	8	ISI-SK-009 SHEET 6 DETAIL F
GUIDE BLOCK BOLTS	24	ISI-SK-009 SHEET 7 DETAIL G

ASSEMBLY NO.	DESCRIPTION
B-103	CORE SUPPORT SHIELD ASSEMBLY
B-291	THERMAL SHIELD ASSEMBLY
C-52	CORE BARREL ASSEMBLY
C-286	LOWER GRID FLOW DISTRIBUTOR & GUIDE TUBE ASSEMBLY
27-A40	SURVEILLANCE SPECIMEN HOLDER TUBE ASSEMBLY

REV.	DATE	DESCRIPTION
1	8-21-00	INC. DCN ISI-SK-008-1 PER DDR 00-1766
0	9-12-89	ISSUED FOR SECOND 10 YEAR INSERVICE INSPECTION INTERVAL

JOR	CHK	ENGR	ENGR SUPV	ENG MGR
SBW			MR	

INITIALS ON FILE

SCALE N.T.S. | DESIGNED | DRAWN WME | DATE 7-10-89

DAVIS-BESSE NUCLEAR POWER STATION
UNIT NO. 1
THE TOLEDO EDISON COMPANY

0

CORE SUPPORT ASSEMBLY

DRAWING NO. ISI-SK-008 | REV. 1

DB: 08-01-00 DFN=J:/ISI/ISISK008.DGN

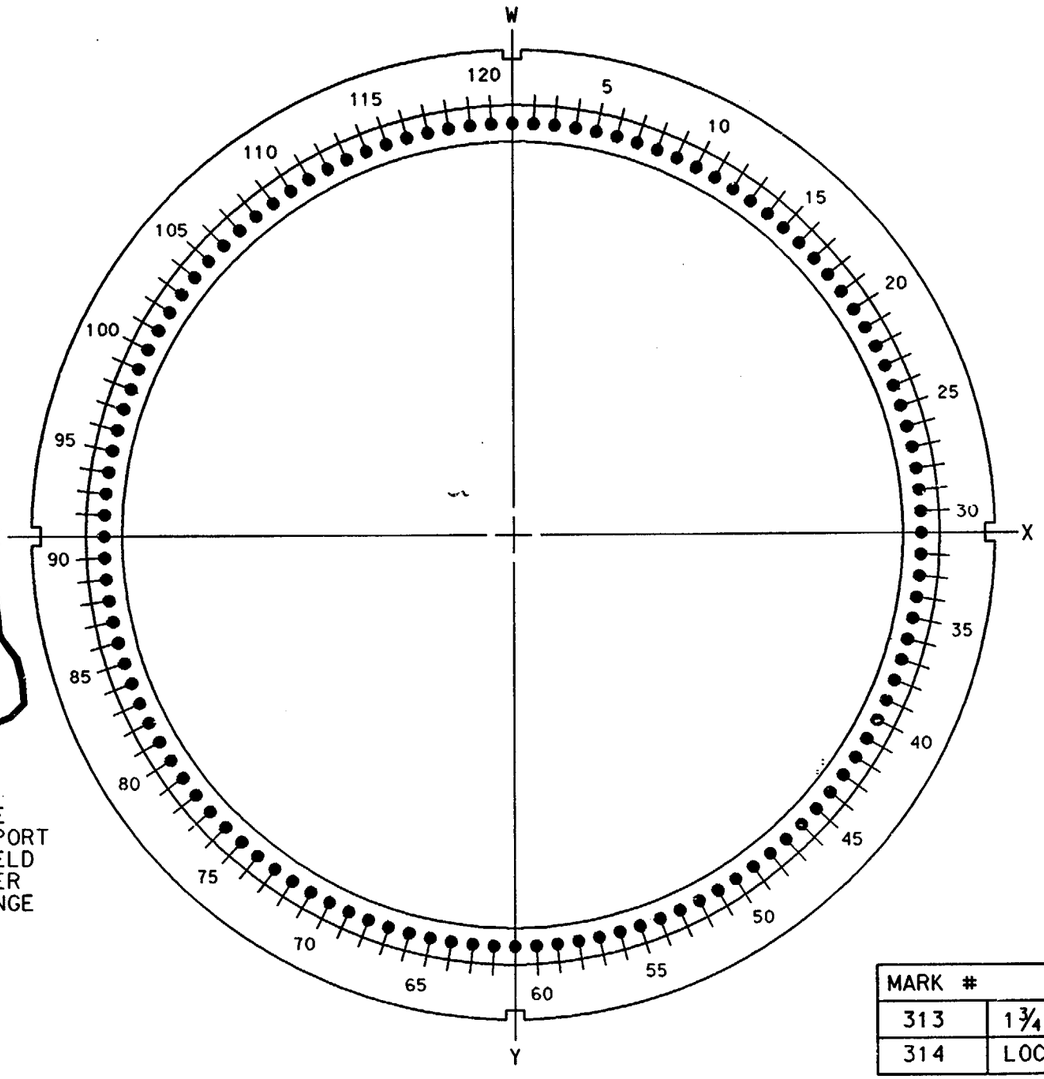

UPPER CORE BARREL
BOLT HOLE NUMBERS

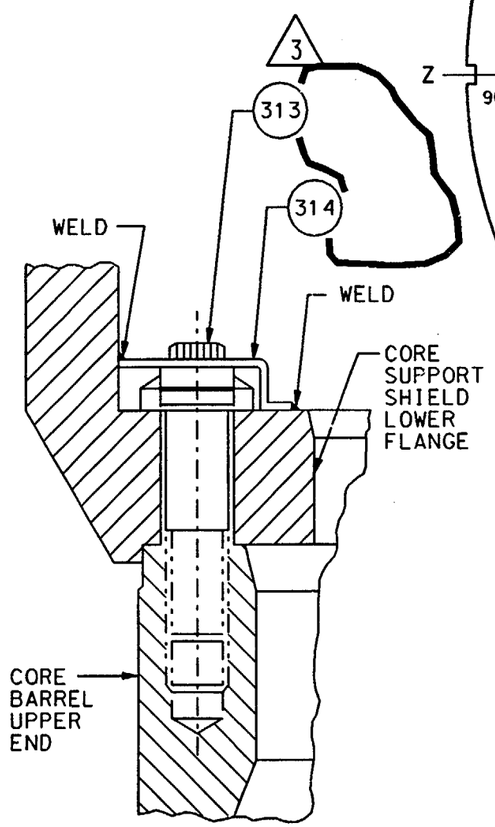

UPPER CORE BARREL (UCB)
BOLTS (QTY. 120)
DETAIL A

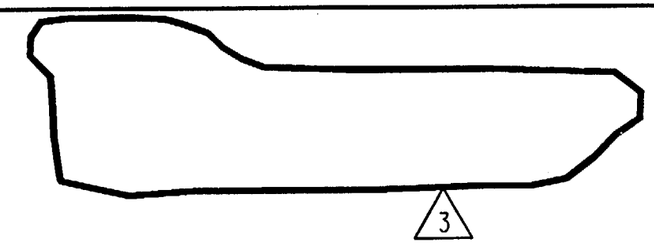

REFERENCE DRAWINGS:

B&W 27123F CORE BARREL ASSEMBLY (TED #7749-M-503-166)

MARK #	DESCRIPTION	MATERIAL
313	1¾" DIA. 8UNC-2A UCB BOLT (120)	A453 GR.660
314	LOCKING CLIP (WELDED) (120)	

REV.	DATE	DESCRIPTION	JOR	BY	CHK	ENGR	ENGR SUPV	ENG MGR
3	8-21-00	INC. DCN ISI-SK-009-4 PER DDR 00-1766						
2	9-30-92	INC. DCN ISI-SK-009-1 FOR DCR 91-0011			"INITIALS ON FILE"	"INITIALS ON FILE"		
1	9-20-90	ISSUED FOR SECOND 10 YEAR INSERVICE INSPECTION INTERVAL						

SCALE N.T.S. | DESIGNED | DRAWN | DATE 7-10-89

DAVIS-BESSE NUCLEAR POWER STATION
UNIT NO. 1
THE TOLEDO EDISON COMPANY

Q

REACTOR VESSEL CORE SUPPORT
ASSEMBLY BOLTING DETAILS

DRAWING NO. ISI-SK-009 SHEET 1 | REV. 3

DB DATE 07-28-00 DFN=J:/ISI/ISI09SH1.DGN

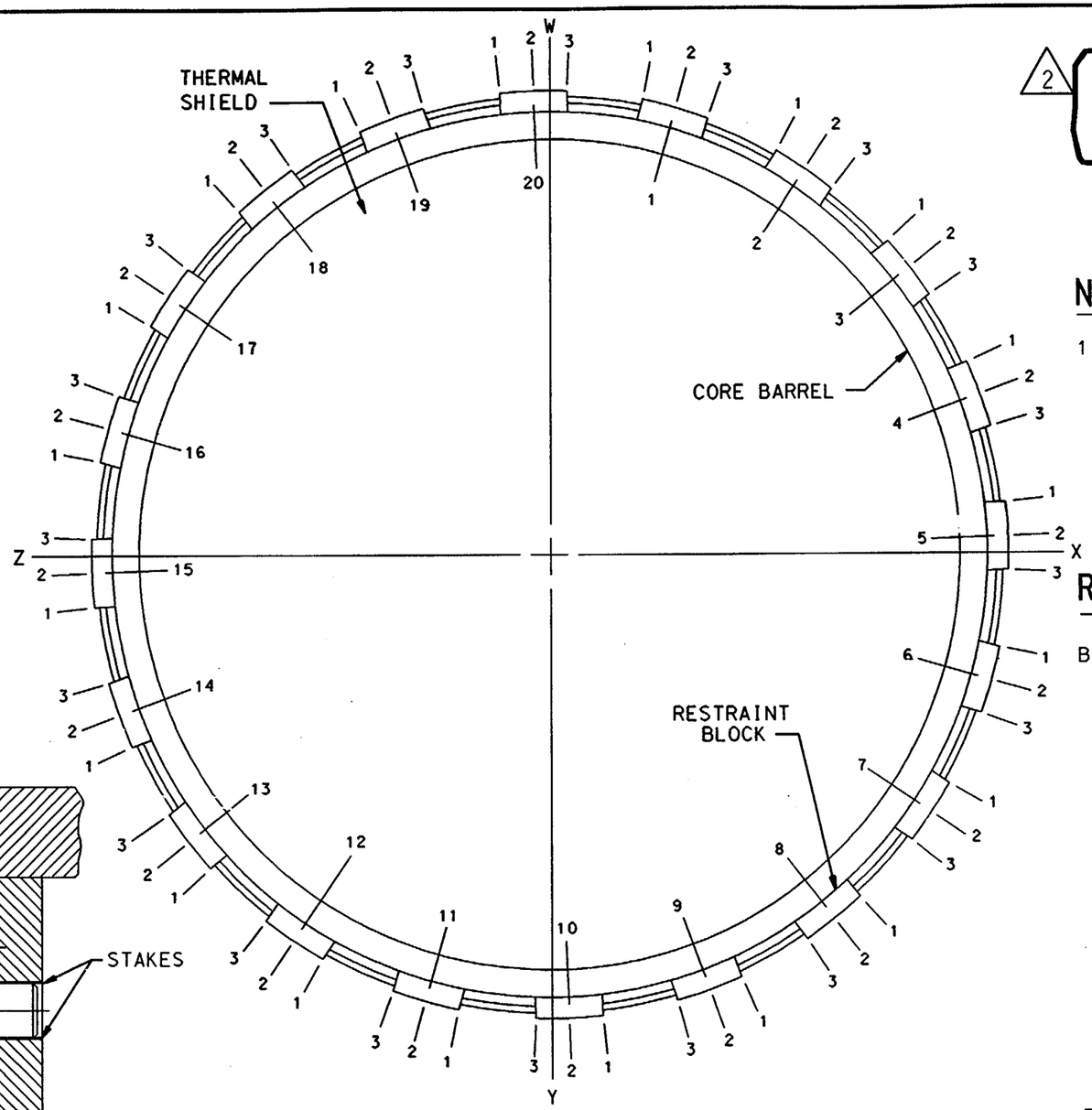

UPPER THERMAL SHIELD
BOLT HOLE NUMBERS

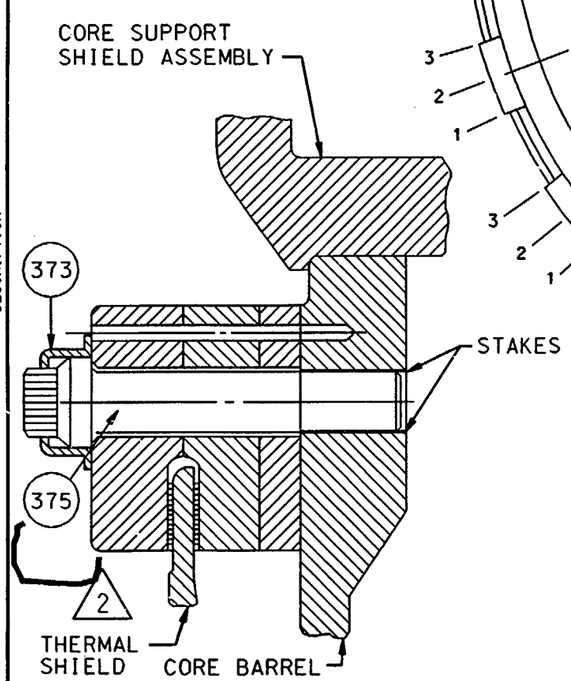

UPPER THERMAL SHIELD (UTS)
BOLTS (QTY. 60)
DETAIL B

NOTES:

1. THERE ARE THREE (3) MK375 UPPER THERMAL SHIELD (UTS) BOLTS (A453, GRADE 660, CONDITION A) FOR EACH OF THE 20 RESTRAINT BLOCKS. THE BOLT HOLE NUMBER CONSISTS OF THE RESTRAINT BLOCK NUMBER FOLLOWED BY THE BOLT NUMBER (1,2 OR 3).

REFERENCE DRAWINGS:

B&W 125670D THERMAL SHIELD UPPER RESTRAINT ARRANGEMENT (TED# 7749-M-503-101)

MARK NO.	DESCRIPTION	MATERIAL
373	LOCKING CLIP (WELDED) (60)	
375	1½" DIA. 8UNC-2A UTS BOLT (60)	A453 GR.660

REV.	DATE	DESCRIPTION
2	8-21-00	INC. DCN ISI-SK-009-5 PER DDR 00-1766
1	9-20-90	ISSUED FOR SECOND 10 YEAR INSERVICE INSPECTION INTERVAL

JOR	CHK	ENGR	ENGR SUPV	ENG MGR
BY	"INITIALS ON FILE"			

SCALE N.T.S. | DESIGNED | DRAWN WME | DATE 7-10-89

DAVIS-BESSE NUCLEAR POWER STATION
UNIT NO. 1
THE TOLEDO EDISON COMPANY

Q

REACTOR VESSEL CORE SUPPORT ASSEMBLY BOLTING DETAILS

DRAWING NO. ISI-SK-009 SHEET 2 | REV. 2

DB: 07-28-00 DFN=J:/ISI/ISI09SH2.DGN

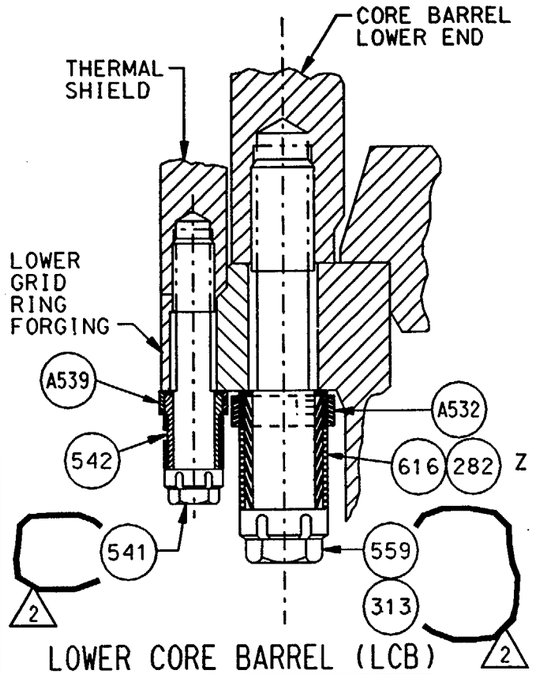

LOWER CORE BARREL (LCB)
BOLTS (QTY. 108)
AND LOWER THERMAL SHIELD
(LTS) BOLTS (QTY 96)

DETAIL C

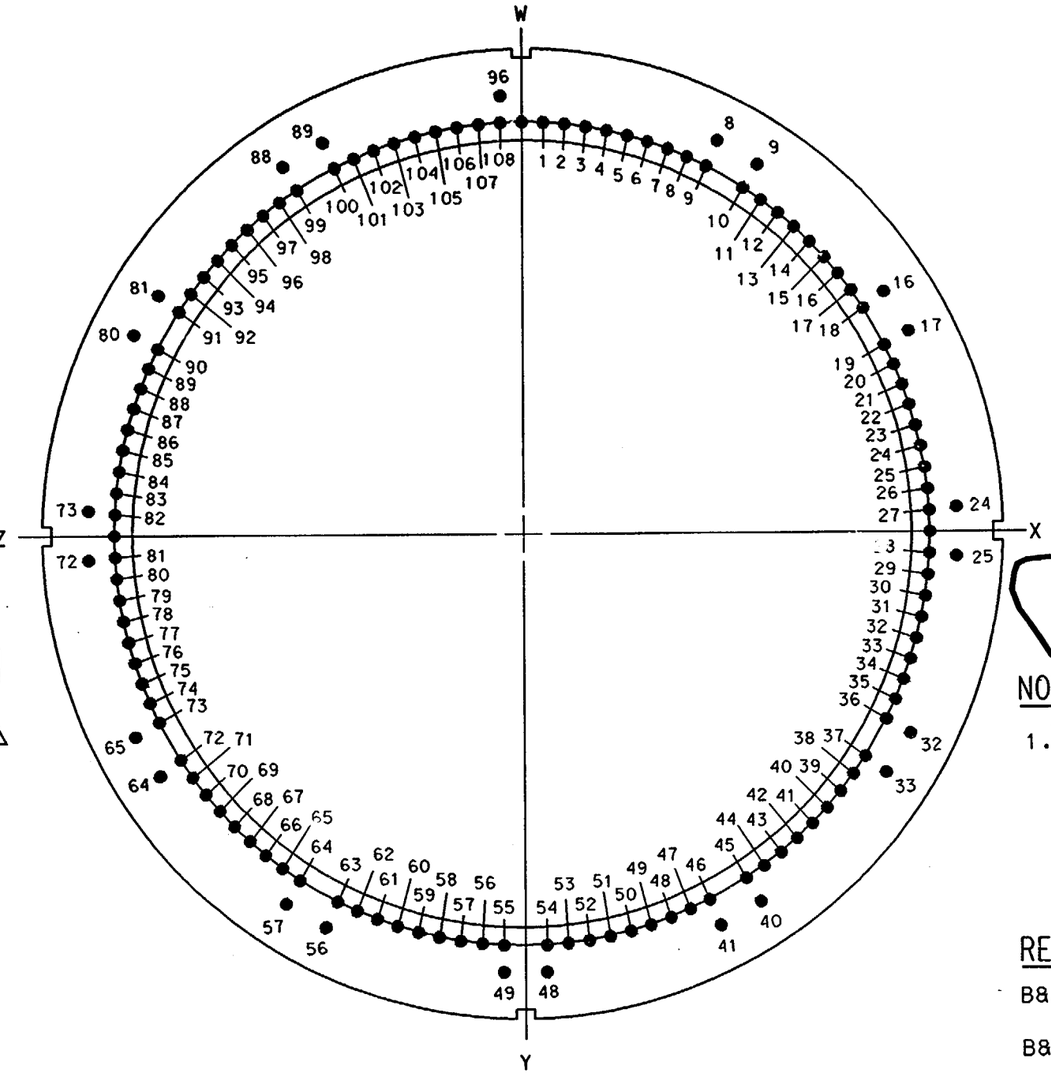

LOWER CORE BARREL/LOWER THERMAL SHIELD
BOLT HOLE NUMBERS

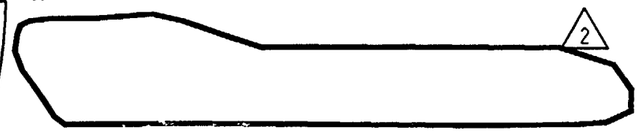

NOTES:

1. THERE ARE FOUR (4) MK313 LOWER CORE BARREL (LCB) BOLTS (A453, GRADE 660, CONDITION A) AND FOUR (4) MK282 LOCKING CLIPS (WELDED) ADJACENT TO EACH OF THE TWELVE (12) GUIDE BLOCKS. THE REMAINING 60-MK559 LOWER CORE BARREL (LCB) BOLTS AND 60 LOCKING CUP ASSEMBLIES ARE SHOWN IN DETAIL C.

REFERENCE DRAWINGS:

B&W 27123F CORE BARREL ASSEMBLY (TED #7749-M-503-166)

B&W 1143542D LOWER CORE BARREL BOLT (INCONEL X-750) (TED #12501-M-503-675)

B&W 1143494D LOWER THERMAL SHIELD BOLT (TED #12501-M-503-504)

MARK #	DESCRIPTION	MATERIAL
A532	LOCKING CUP ASSEMBLY (AS REQ'D)	
A539	LOCKING CUP ASSEMBLY (48)	
541	1" DIA. 8 UNR-2A LTS BOLT (96)	INCONEL X-750
542	COMPRESSION COLLAR (96)	
559	1¾" DIA. 8 UNR-2A LCB BOLT (60)	INCONEL X-750
616	COMPRESSION COLLAR (60)	
313	1¾" DIA. 8 UNC-2A LCB BOLT (48)	A453 GR660
282	LOCKING CLIP (WELDED) (48)	

REV.	DATE	DESCRIPTION
2	8-21-00	INC. DCN ISI-SK-0009-6 PER DDR 00-1766
1	9-20-90	ISSUED FOR SECOND 10 YEAR INSERVICE INSPECTION INTERVAL

JOR	SBW	ON FILE	
BY	CHK	ENGR	ENGR SUPV	ENG MGR

SCALE N.T.S. | DESIGNED | DRAWN BLN | DATE 7-10-89

DAVIS-BESSE NUCLEAR POWER STATION
UNIT NO. 1
THE TOLEDO EDISON COMPANY

REACTOR VESSEL CORE SUPPORT
ASSEMBLY BOLTING DETAILS

DRAWING NO. ISI-SK-009 SHEET 3 | REV. 2

DB:07-28-00 DFN=J:/ISI/ISI09SH3.DGN

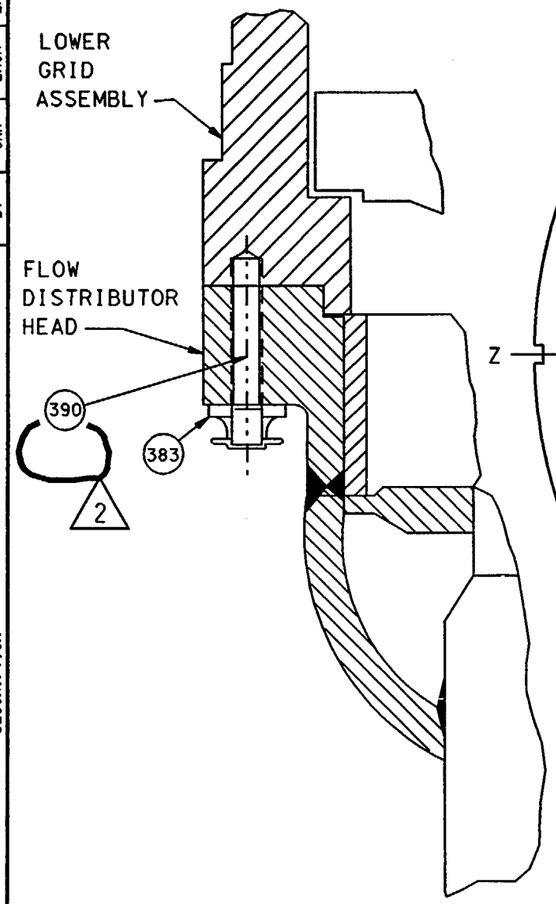

FLOW DISTRIBUTOR BOLTS
QTY. 96
DETAIL D

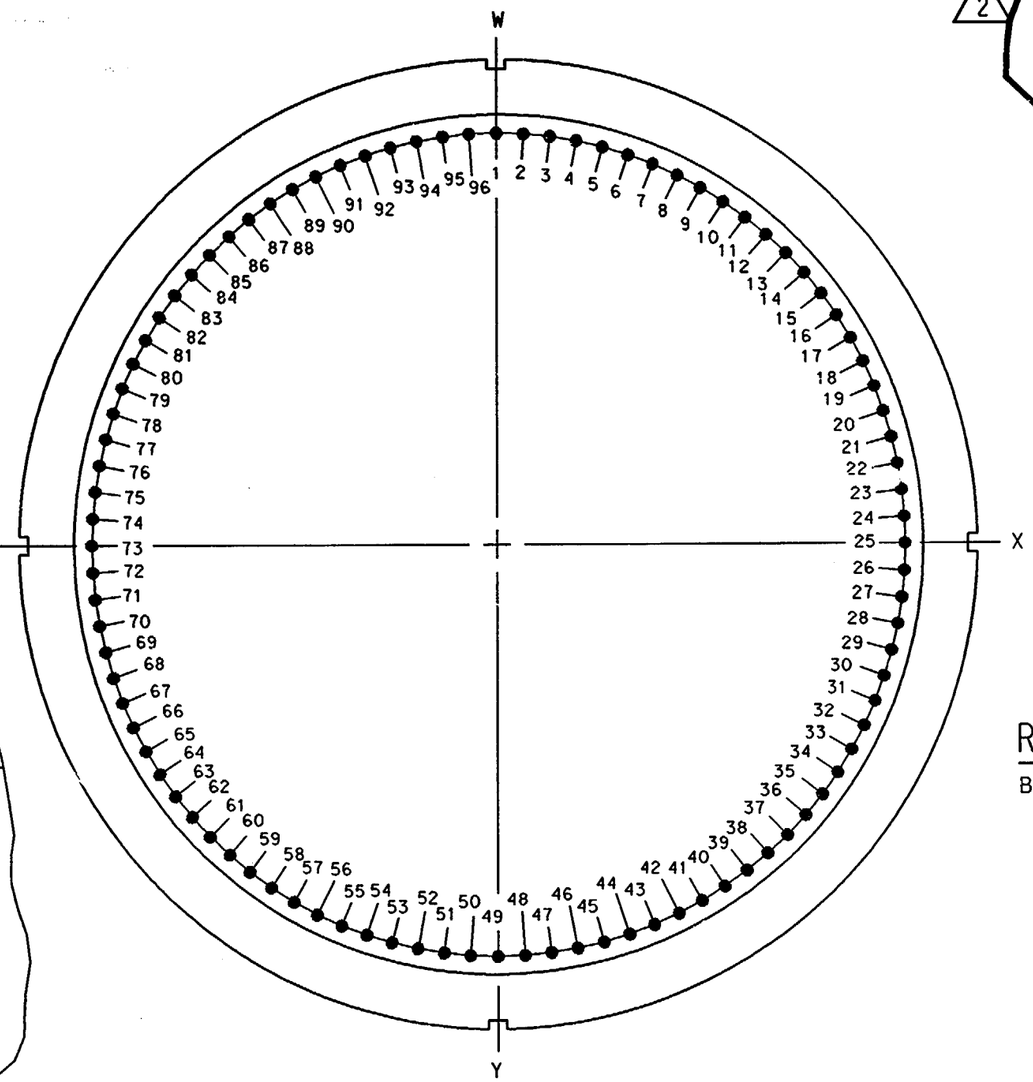

FLOW DISTRIBUTOR
BOLT HOLE NUMBERS

REFERENCE DRAWINGS:

B&W 154683E LOWER GRID, FLOW DISTRIBUTOR AND GUIDE TUBE ASSEMBLY (TED# 7749-M-503-92)

MARK NO.	DESCRIPTION	MATERIAL
383	LOCKING CLIP (WELDED) (96)	
390	1" DIA. 8UNC-2A BOLT (96)	A453-65 GR.660

REV.	DATE	DESCRIPTION
2	8-21-00	INC. DCN ISI-SK-0009-7 PER DDR 00-1766
1	9-20-90	ISSUED FOR SECOND 10 YEAR INSERVICE INSPECTION INTERVAL

JOR	SBW	MRL	—	—
BY	CHK	ENGR	ENGR SUPV	ENG MGR

"INITIALS ON FILE"

SCALE N.T.S.	DESIGNED	DRAWN BLN	DATE 7-10-89

DAVIS-BESSE NUCLEAR POWER STATION
UNIT NO. 1
THE TOLEDO EDISON COMPANY

REACTOR VESSEL CORE SUPPORT ASSEMBLY BOLTING DETAILS

DRAWING NO.	REV.
ISI-SK-009 SHEET 4	2

DB: 07-29-00 DFN=J:/ISI/ISI09SH4.DGN

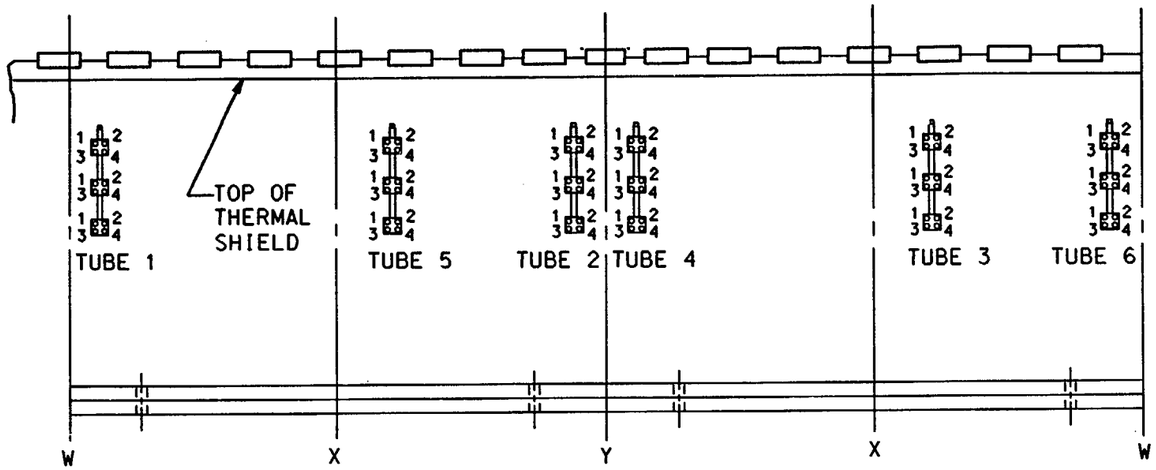

SSHT BOLT HOLE LOCATION

NOTES:

1. THERE ARE FOUR (4) MK557 SURVEILLANCE SPECIMEN HOLDER TUBE (SSHT) BOLTS FOR EACH OF THE THREE (3) TUBE BRACKETS. THE BOLT HOLE NUMBER CONSISTS OF THE TUBE NUMBER FOLLOWED BY THE BRACKET LOCATION AND BOLT NUMBER (1,2,3 OR 4)

REFERENCE DRAWINGS:

B&W 143063E SURVEILLANCE HOLDER TUBE FIELD INSTALLATION (TED# 7749-M-503-172)

B&W 1143510D SSHT INCONEL BOLT (TED# 12501-M-503-514)

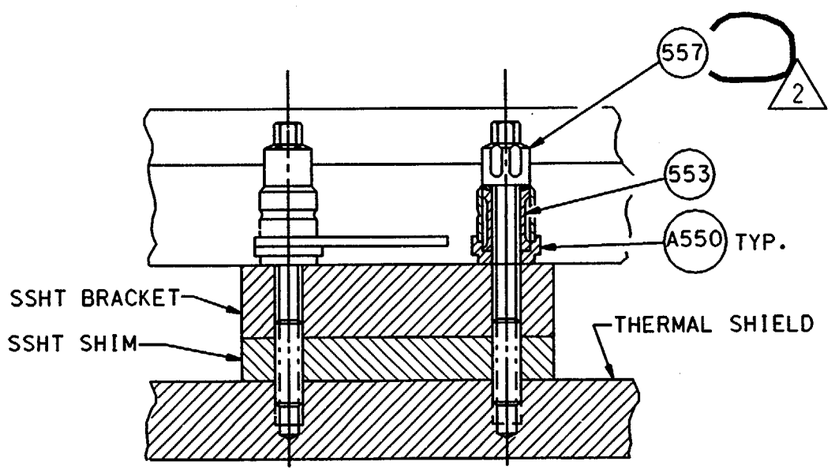

SURVEILLANCE SPECIMEN HOLDER TUBE (SHT) BOLTS (QTY. 72)

DETAIL E

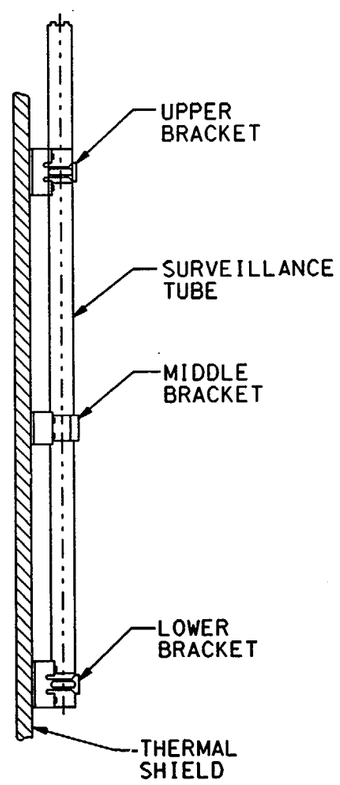

MARK NO.	DESCRIPTION	MATERIAL
A550	LOCKING CUP ASSEMBLY (TYP.)	
553	COMPRESSION SLEEVE (72)	
557	3/4" DIA. 10 UNR-2A SSHT BOLT (72)	INCONEL X-750

SCALE N.T.S.	DESIGNED	DRAWN WHE	DATE 7-10-89

DAVIS-BESSE NUCLEAR POWER STATION
UNIT NO. 1
THE TOLEDO EDISON COMPANY

0

REACTOR VESSEL CORE SUPPORT ASSEMBLY BOLTING DETAILS

DRAWING NO.	REV.
ISI-SK-009 SHEET 5	2

DB:07-29-00 DFN=J:/ISI/ISI09SH5.DGN

REV.	DATE	DESCRIPTION
2	8-21-00	INC. DCN ISI-SK-009-8 PER DDR 00-1766
1	9-20-90	ISSUED FOR SECOND 10 YEAR INSERVICE INSPECTION INTERVAL

BY	CHK	ENGR	ENGR SUPV	ENG MGR
JOR	SBW	"INITIALS ON FILE"		

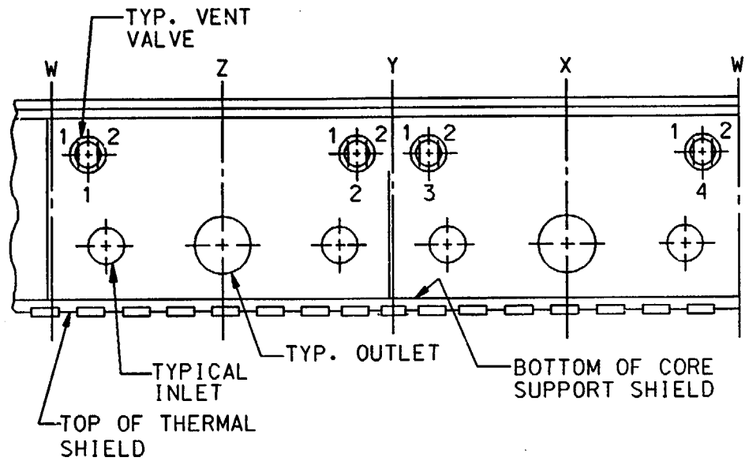

VENT VALVE BOLTING LOCATION

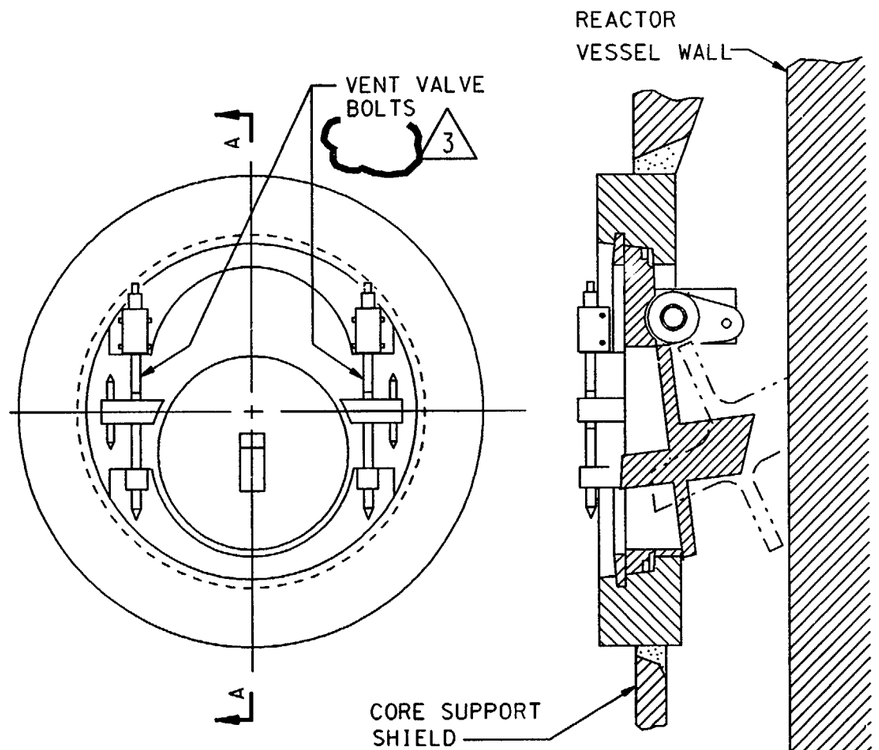

SECTION A-A

VENT VALVE BOLTS (QTY. 8)

DETAIL F

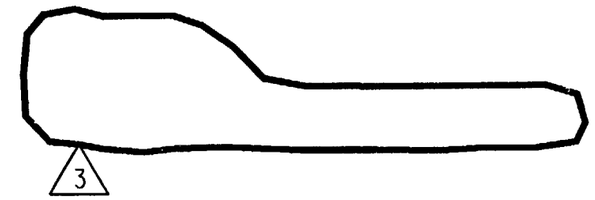

NOTES:

1. THERE ARE TWO (2) BOLTS FOR EACH OF THE FOUR (4) VENT VALVES. THE BOLT HOLE NUMBER CONSISTS OF THE VENT VALVE NUMBER FOLLOWED BY THE BOLT NUMBER (1 OR 2).

REFERENCE DRAWINGS:

B & W 27123F CORE SUPPORT ASSEMBLY (TED# 7749-M-503-166)

B & W 20762H (TED# 7749-M-503-150)

REV.	DATE	DESCRIPTION	BY	CHK	ENGR	ENGR SUPV	ENG MGR
3	8-21-00	INC. DCN ISI-SK-009-9 PER DDR 00-1766	JOR				
2	9-30-92	INC. DCN ISI-SK-009-2 FOR DCR 91-0011		INITIALS ON FILE	INITIALS ON FILE		
1	9-20-90	ISSUED FOR SECOND 10 YEAR INSERVICE INSPECTION INTERVAL					

SCALE N.T.S.	DESIGNED	DRAWN CB	DATE 7-10-89

DAVIS-BESSE NUCLEAR POWER STATION
UNIT NO. 1
THE TOLEDO EDISON COMPANY

Q

REACTOR VESSEL CORE SUPPORT ASSEMBLY BOLTING DETAILS

DRAWING NO.	REV.
ISI-SK-009 SHEET 6	3

DB DATE: 07-28-00 DFN=J:/ISI/ISI09SH6.DGN

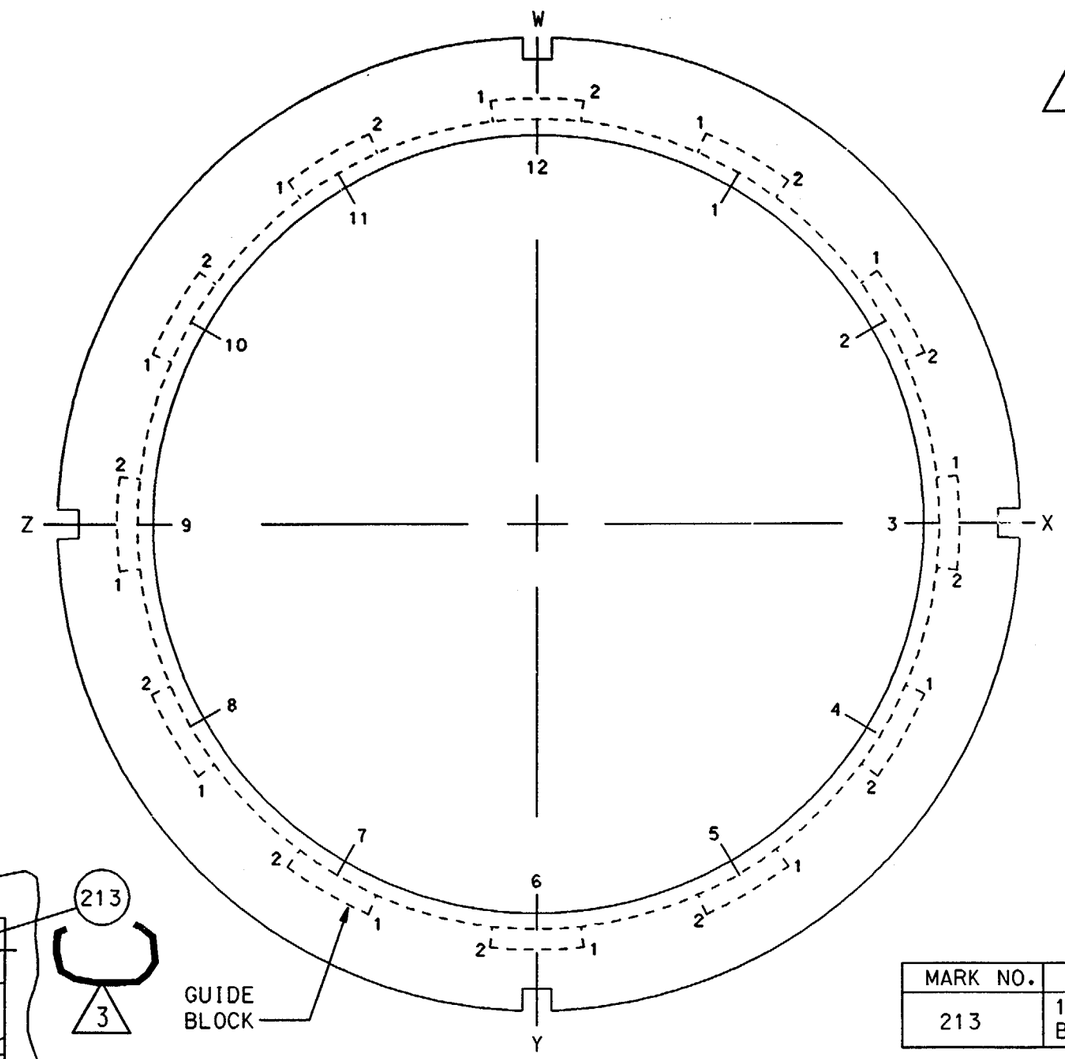

GUIDE BLOCK BOLT HOLE NUMBERS

NOTES:

1. THERE ARE TWO (2) BOLTS FOR EACH OF THE TWELVE GUIDE BLOCKS. THE BOLT HOLE NUMBER CONSISTS OF THE GUIDE BLOCK NUMBER FOLLOWED BY THE BOLT NUMBER (1 OR 2).

REFERENCE DRAWINGS:

B & W 27123F CORE SUPPORT ASSEMBLY
(TED# 7749-M-503-166)

MARK NO.	DESCRIPTION	MATERIAL
213	1" DIA. 8UNC-2A GUIDE BLOCK BOLTS (24)	A193 GRB8

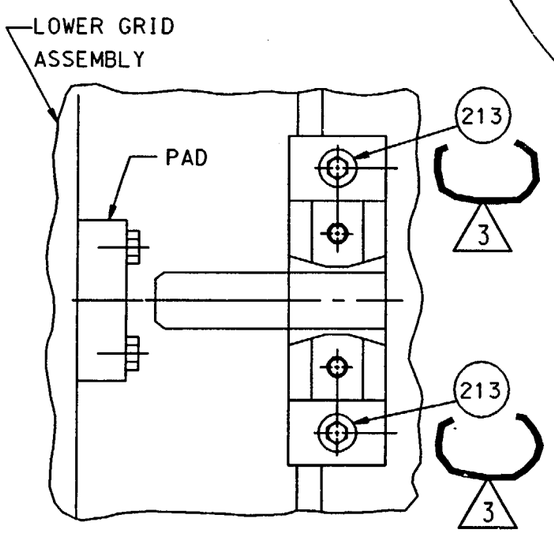

GUIDE BLOCK BOLTS (QTY 24)
(VIEW A-A OF DWG. ISI-SK-008)
DETAIL G

REV.	DATE	DESCRIPTION	JOR	CHK	BY	ENGR	ENGR SUPV	ENG MGR
3	8-21-00	INC. DCN ISI-SK-009-10 PER DDR 00-1766						
2	9-30-92	INC. DCN ISI-SK-009-3 FOR DCR 91-0011		"INITIALS ON FILE"	"INITIALS ON FILE"			
1	9-20-90	ISSUED FOR SECOND 10 YEAR INSERVICE INSPECTION INTERVAL						

SCALE N.T.S.	DESIGNED	DRAWN CB	DATE 7-10-89

DAVIS-BESSE NUCLEAR POWER STATION
UNIT NO. 1
THE TOLEDO EDISON COMPANY

Q

REACTOR VESSEL CORE SUPPORT ASSEMBLY BOLTING DETAILS

DRAWING NO.	REV.
ISI-SK-009 SHEET 7	3

DB DATE: 07-28-00 DFN=J:/ISI/ISI09SH7.DGN

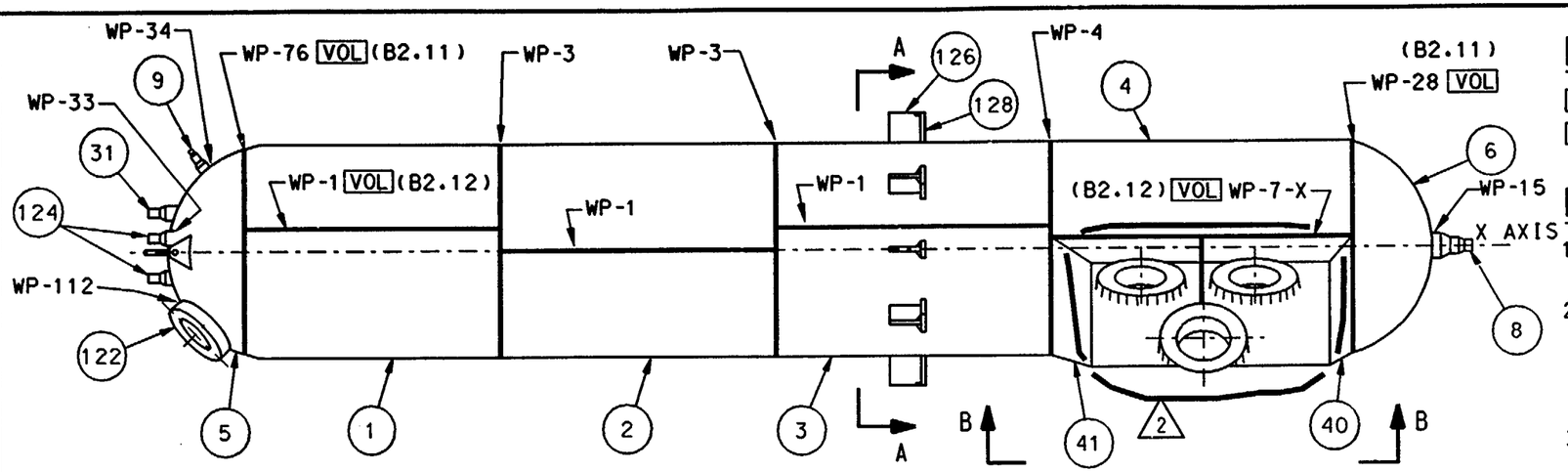

LEGEND:

VOL - VOLUMETRIC EXAMINATION

SUR - SURFACE EXAMINATION

NOTES:

1. THE WELD IDENTIFICATION NUMBERS ARE PRECEEDED BY "RC-PZR-"
2. FOR THE INSERVICE INSPECTION OF STUDS AND NUTS, THE HEATER BUNDLE COVER ASSEMBLIES ARE IDENTIFIED AS NUMBERS 1, 2 AMD 3. (EXAMPLE: 1 HEATER BELT COVER ASSEMBLY NO.1).
3. THE SUPPORT ATTACHMENTS ARE NUMBERED 1 THRU 8 STARTING AT THE W AXIS.

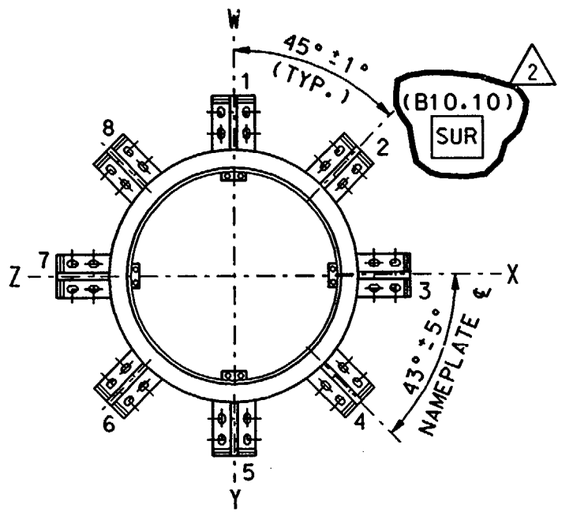

SECTION A-A (NOTE 3)

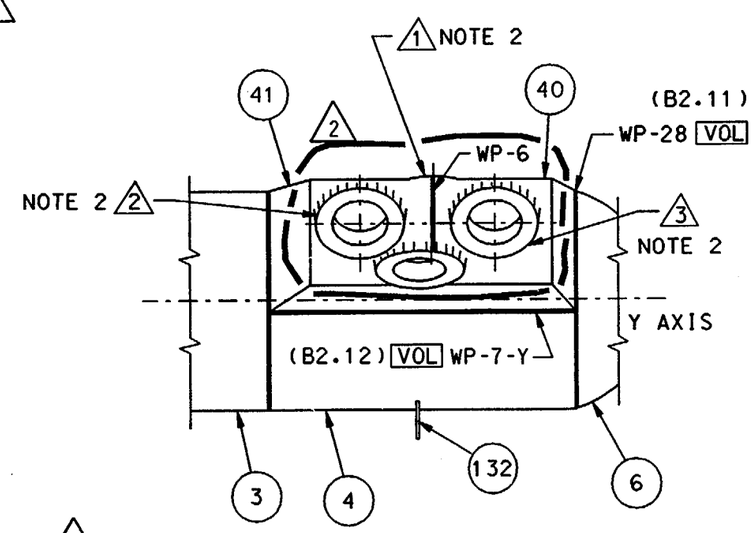

SECTION B-B

MARK #	DESCRIPTION	MATERIAL
1	UPPER SHELL	SA516 GR.70
2	SHELL	SA516 GR.70
3	SHELL	SA516 GR.70
4	HEATER BELT SHELL	SA516 GR.70
5	UPPER HEAD	SA516 GR.70
6	BOTTOM HEAD	SA516 GR.70
8	10" DIA. SURGE NOZZLE	A508 CL1
9	4" DIA. SPRAY NOZZLE	A508 CL1
31	2½" DIA. RELIEF NOZZLE	A508 CL1
40	LOWER HEATER BELT FORGING	A508 CL1
41	UPPER HEATER BELT FORGING	A508 CL1
122	MANWAY FORGING	A508 CL1
124	3" DIA. RELIEF NOZZLE (2)	A508 CL1
126	VERT. VESSEL SUPPORT PLATE	SA516 GR.70
128	HORZ. VESSEL SUPPORT PLATE	SA516 GR.70

2

SUPPORT ATTACHMENT #	WELD #
1	WP-118-W
2	WP-118-W/X
3	WP-118-X
4	WP-118-X/Y
5	WP-118-Y
6	WP-118-Y/Z
7	WP-118-Z
8	WP-118-Z/W

REFERENCE DRAWINGS:

B&W 154592E VESSEL SUBASSEMBLY (TED# 7749-M-507-24)

B&W 154599E HEATER BELT DETAILS (TED# 7749-M-507-32)

B&W 154607E RADIOGRAPHIC OUTLINE (TED# 7749-M-507-34)

B&W 160449E VESSEL SUPPORTS (TED# 7749-M-507-36)

REV.	DATE	DESCRIPTION	BY	CHK	ENGR	ENGR SUPV	ENG MGR
2	8-21-00	INC. DCN ISI-SK-020-2 PER DDR 00-1766	JOR	SBW			
1	9-20-90	ISSUED FOR SECOND 10 YEAR INSERVICE INSPECTION INTERVAL		"INITIALS ON FILE"			

SCALE N.T.S. | DESIGNED | DRAWN WME | DATE 5-3-89

DAVIS-BESSE NUCLEAR POWER STATION
UNIT NO. 1
THE TOLEDO EDISON COMPANY

0

PRESSURIZER OUTLINE
CONTAINMENT BUILDING

DRAWING NO. ISI-SK-020 | REV. 2

DB:07-31-00 DFN=J:/ISI/ISISK020.DGN

MARK #	DESCRIPTION	MATERIAL
5	UPPER HEAD	SA516 GR70
9	4" DIA. SPRAY NOZZLE	A508 CL1
31	2½" DIA. RELIEF NOZZLE	A508 CL1
32	2½" DIA. RELIEF NOZZLE SAFE END	SA182 TP-F316
45	4" DIA. SPRAY NOZZLE SAFE END	SB-166
78	1" DIA. VENT NOZZLE (EXEMPT)	SB-166
122	MANWAY FORGING	A508 CL1
124	3" DIA. RELIEF NOZZLE (2)	A508 CL1
125	3" DIA. RELIEF NOZZLE SAFE END (2)	SA182 TP-F316

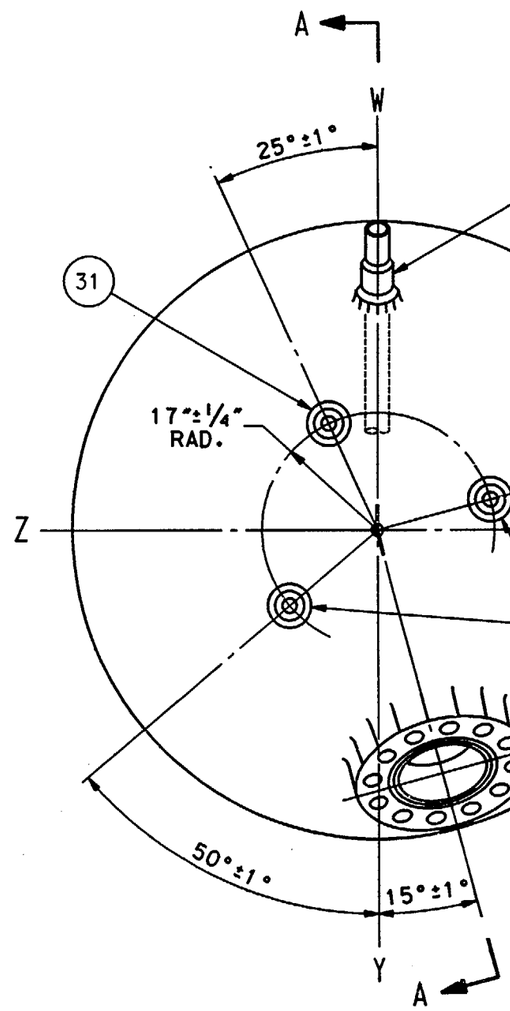

UPPER HEAD
PLAN VIEW

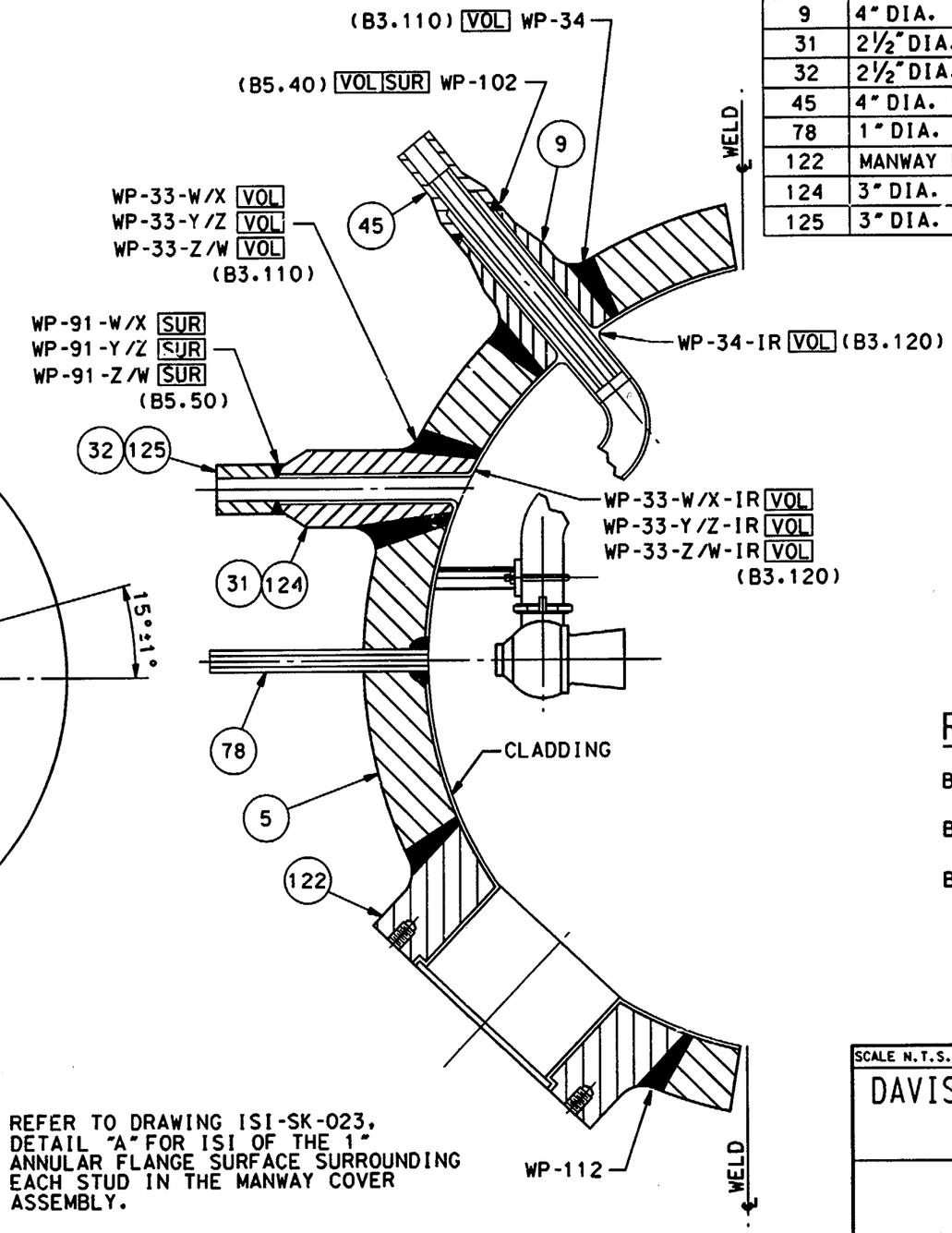

REFER TO DRAWING ISI-SK-023, DETAIL "A" FOR ISI OF THE 1" ANNULAR FLANGE SURFACE SURROUNDING EACH STUD IN THE MANWAY COVER ASSEMBLY.

SECTION A-A

LEGEND:

VOL - VOLUMETRIC EXAMINATION
SUR - SURFACE EXAMINATION
VIS - VISUAL (VT-1) EXAMINATION

NOTES:

1. THE WELD IDENTIFICATION NUMBERS ARE PRECEEDED BY "RC-PZR-"

REFERENCE DRAWINGS:

B&W 154594E UPPER HEAD ASSEMBLY AND DETAILS (TED# 7749-M-507-25)

B&W 154601E 4 IN. SPRAY NOZZLE DETAILS (TED# 7749-M-507-35)

B&W 154602E MISC. NOZZLE DETAILS SHEET 1 (TED# 7749-M-507-37)

SCALE N.T.S.	DESIGNED	DRAWN WME	DATE 5-3-89

DAVIS-BESSE NUCLEAR POWER STATION
UNIT NO. 1
THE TOLEDO EDISON COMPANY

Q

PRESSURIZER UPPER HEAD
NOZZLE DETAILS
CONTAINMENT BUILDING

DRAWING NO.	REV.
ISI-SK-021	1 Ø

REV.	DATE	DESCRIPTION	BY	CHK	ENGR	ENGR SUPV	ENG MGR
1	9-20-90	ISSUED FOR SECOND 10 YEAR INSERVICE INSPECTION INTERVAL	WME	JJS	TWB	MDS	ETC

DFN=QS1:[55,7]ISISK021.DGN

MARK #	DESCRIPTION	MATERIAL
6	LOWER HEAD	SA516 GR70
8	10" DIA. SURGE NOZZLE	A508 CL1
37	10" DIA. SURGE NOZZLE SAFE END	A336 CLF8M
72	SURGE DIFFUSER (EXEMPT)	SA312 TP304

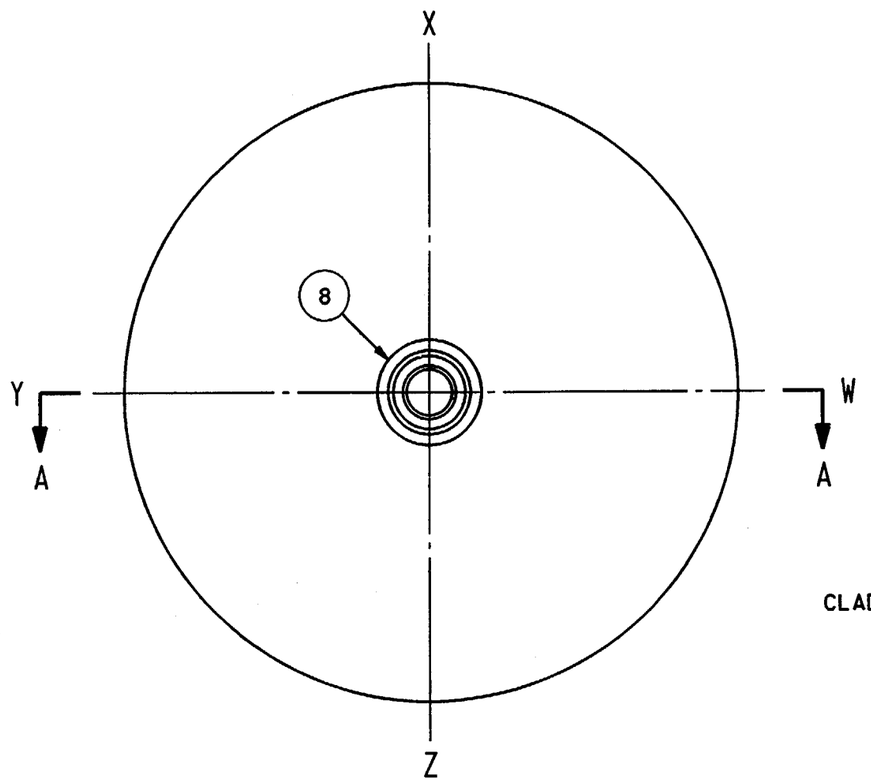

BOTTOM HEAD
PLAN VIEW

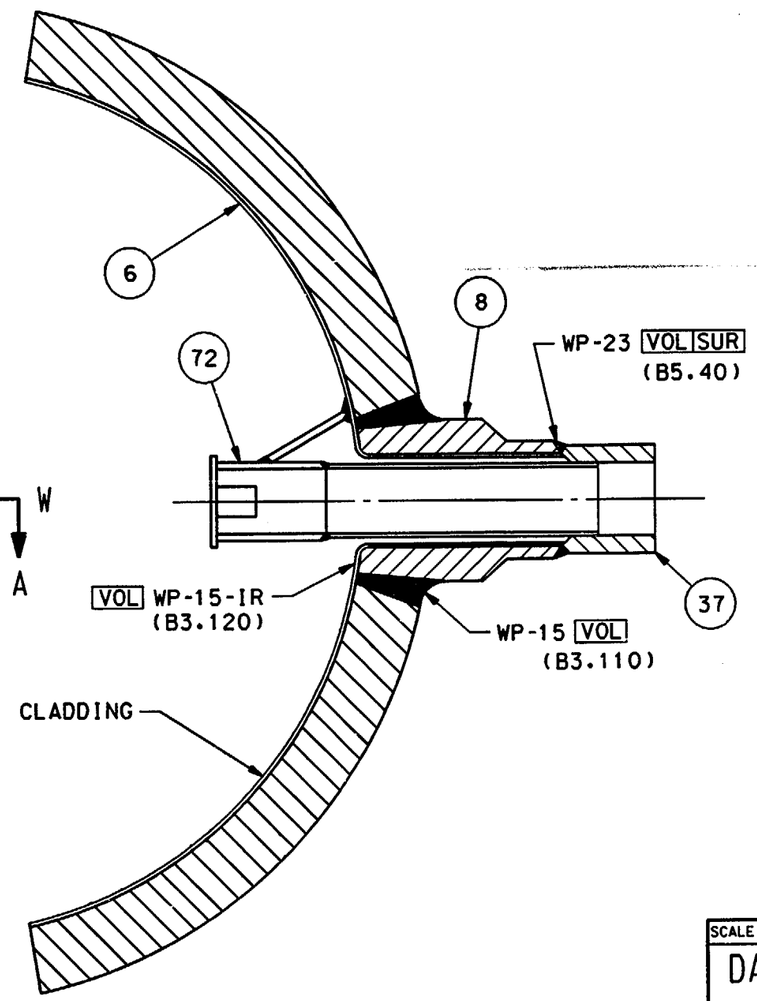

SECTION A-A

LEGEND:

VOL - VOLUMETRIC EXAMINATION
SUR - SURFACE EXAMINATION

NOTES:

1. THE WELD IDENTIFICATION NUMBERS ARE PRECEEDED BY "RC-PZR-"

REFERENCE DRAWINGS:

B&W 154595E LOWER HEAD ASSEMBLY AND DETAILS (TED# 7749-M-507-26)
B&W 154600E SURGE NOZZLE DETAILS (TED# 7749-M-507-31)

REV.	DATE	DESCRIPTION
0	9-20-90	ISSUED FOR SECOND 10 YEAR INSERVICE INSPECTION INTERVAL

WME	CHK	ENGR	ENGR SUPV	ENG MGR

SCALE N.T.S. | DESIGNED | DRAWN WME | DATE 5-3-89

DAVIS-BESSE NUCLEAR POWER STATION
UNIT NO. 1
THE TOLEDO EDISON COMPANY

Q

PRESSURIZER LOWER HEAD
NOZZLE DETAILS
CONTAINMENT BUILDING

DRAWING NO. ISI-SK-022 | REV. 1

DFN=QS1:[55,7]ISISK022.DGN

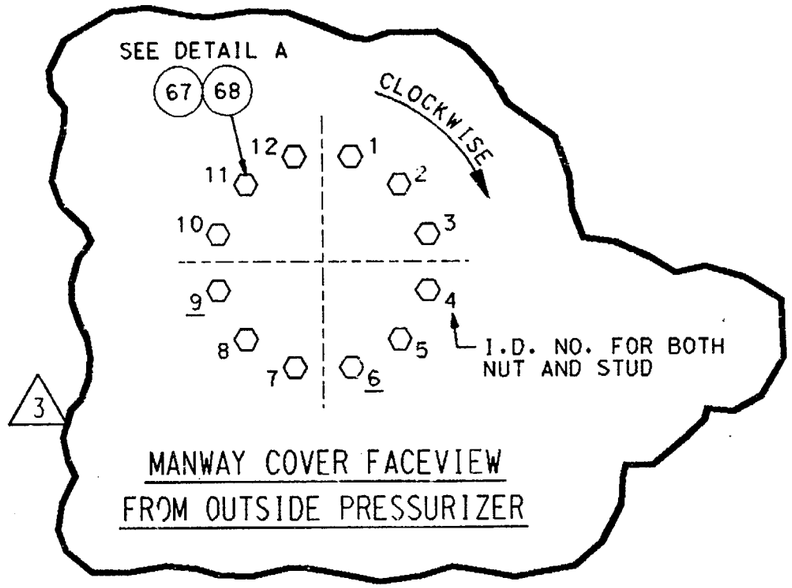

MANWAY COVER FACEVIEW
FROM OUTSIDE PRESSURIZER

MARK #	DESCRIPTION	MATERIAL
4	HEATER BELT SHELL	SA516 GR.70
5	UPPER HEAD	SA516 GR.70
12	COVER PLATE (3)	SA533 GR.B
13	DIAPHRAM (3)	SA240 TP304
67	2 3/4" DIA. 8UN-2A MANWAY STUD (12)	SA320 L43
68	2 3/4" DIA. 8UN-2B MANWAY NUT (12)	SA320 L43
69	MANWAY COVER	SA516 GR.70
70	MANWAY GASKET	——
71	MANWAY INSERT	SA240 TP304
75	2" DIA. 8UN-2A HEATER BUNDLE STUD (48)	SA320 L43
76	2" DIA. 8UN-2B HEATER BUNDLE NUT (48)	SA320 L43
122	MANWAY FORGING	A508 CL1

LEGEND:

VOL - VOLUMETRIC EXAMINATION

VIS - VISUAL (VT-1) EXAMINATION

NOTES:

1. THE EXAMINATION IDENTIFICATION NUMBER FOR EACH MANWAY STUD CONSISTS OF THE STUD SERIAL NUMBER PRECEEDED BY "RC-PZR-STUD".
2. THE EXAMINATION IDENTIFICATION NUMBER FOR ALL VISUAL EXAMINATIONS CONSISTS OF THE MARK NUMBER PRECEEDED BY "RC-PZR".
3. THERE ARE 16 STUDS AND NUTS IN EACH OF THE 3 HEATER BUNDLE COVER ASSEMBLIES (48 STUDS AND NUTS TOTAL). REFER TO DRAWING ISI-SK-020 FOR THE IDENTIFICATION OF THE HEATER BUNDLE COVER ASSEMBLIES.

REFERENCE DRAWINGS:

B&W 154588E HEATER BUNDLE ASSEMBLY AND DETAILS (TED# 7749-M-507-8)

B&W 154606E MISC. CLOSURE DETAILS (TED# 7749-M-507-28)

B&W 27115F PRESSURIZER GENERAL ARRANGEMENT

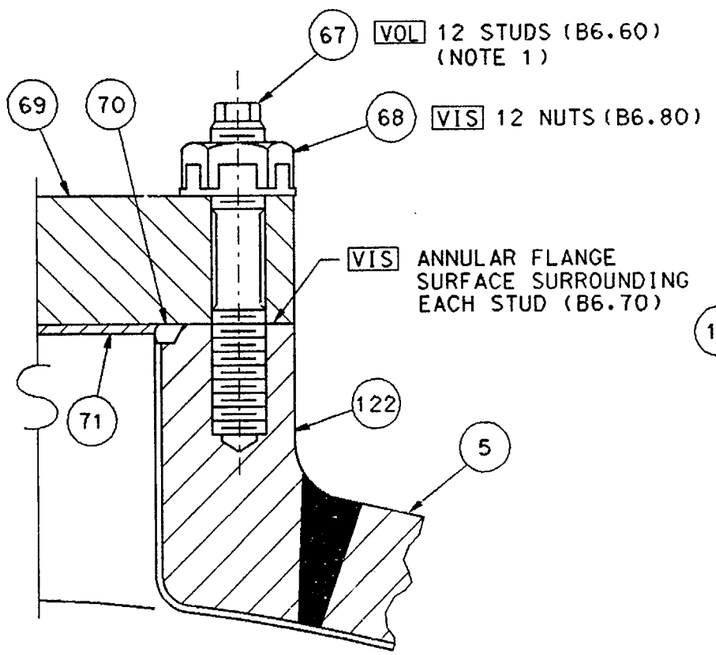

MANWAY COVER ASSEMBLY
DETAIL A

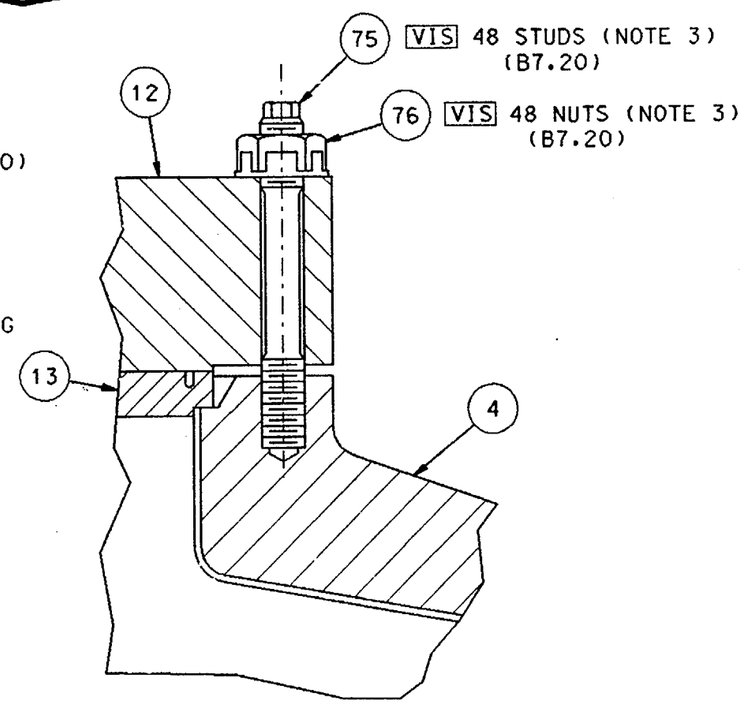

HEATER BUNDLE COVER ASSEMBLY
DETAIL B

FOR TOP(2), MIDDLE(1) & BOTTOM(3) COVER PLATE FOR HEATER BUNDLES (MK-A28-214-1,2 OR 3)

SCALE N.T.S.	DESIGNED	DRAWN WME	DATE 5-3-89

DAVIS-BESSE NUCLEAR POWER STATION
UNIT NO. 1
THE TOLEDO EDISON COMPANY

Q

PRESSURIZER BOLTING DETAILS
CONTAINMENT BUILDING

DRAWING NO.	REV.
ISI-SK-023	3

DB DATE: 09-24-93 DFN=/USR3/ISI/ISISK023.DGN

REV.	DATE	DESCRIPTION
3	[illegible]	INC. DCN ISI-SK-023-2 FOR FPR 91-0095-901
2	9-30-92	INC. DCN ISI-SK-023-1 FOR DCR 91-0011
1	9-20-90	ISSUED FOR SECOND 10 YEAR INSERVICE INSPECTION INTERVAL

BY	CHK	ENGR	ENGR SUPV	ENG MGR
JFS	SBW	INITIALS ON FILE	INITIALS ON FILE	

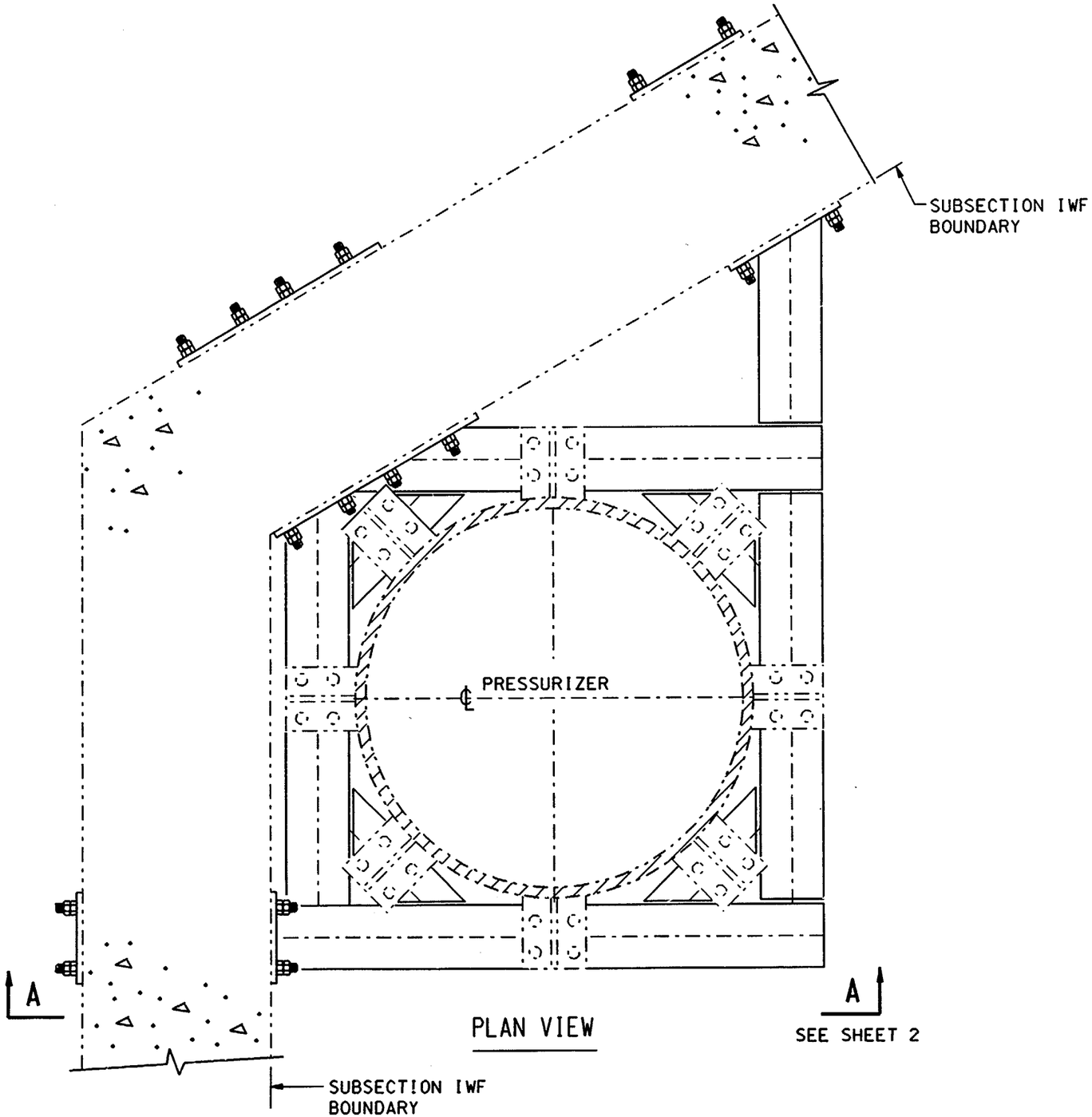

PLAN VIEW

SEE SHEET 2

NOTES:

1. A VT3 EXAMINATION SHALL BE PERFORMED ON THE PRESSURIZER SUPPORT. THE ASME SECTION XI ITEM NUMBER IS F1.40. (2)
2. THE EIGHT SUPPORT ATTACHMENT WELDS (ASME SECTION XI ITEM NUMBER B10.10) ARE SHOWN ON DRAWING ISI-SK-020. (2)

REFERENCE DRAWINGS:

C-184 CONTAINMENT INTERNAL STRUCTURES PRESSURIZER STEEL SUPPORTS

REV.	DATE	DESCRIPTION	BY	CHK	ENGR	ENGR SUPV	ENG MGR
2	8-21-00	INC DCN ISI-SK-024-2 PER DDR 00-1766	JOR				
1	9/24/92	INC DCN ISI-SK-024-1 FOR DCR 91-0011		"INITIALS ON FILE"			
0	9/12/89	ISSUED FOR SECOND 10 YEAR INSERVICE INSPECTION INTERVAL		"INITIALS ON FILE"			

SCALE N.T.S.	DESIGNED	DRAWN CB	DATE 5-3-89

DAVIS-BESSE NUCLEAR POWER STATION
UNIT NO. 1
THE TOLEDO EDISON COMPANY

Q

PRESSURIZER SUPPORTS
CONTAINMENT BUILDING

DRAWING NO.	REV.
ISI-SK-024 SHEET 1	2

DB:07-31-00 DFN= J:/ISI/ISI24SH1.DGN

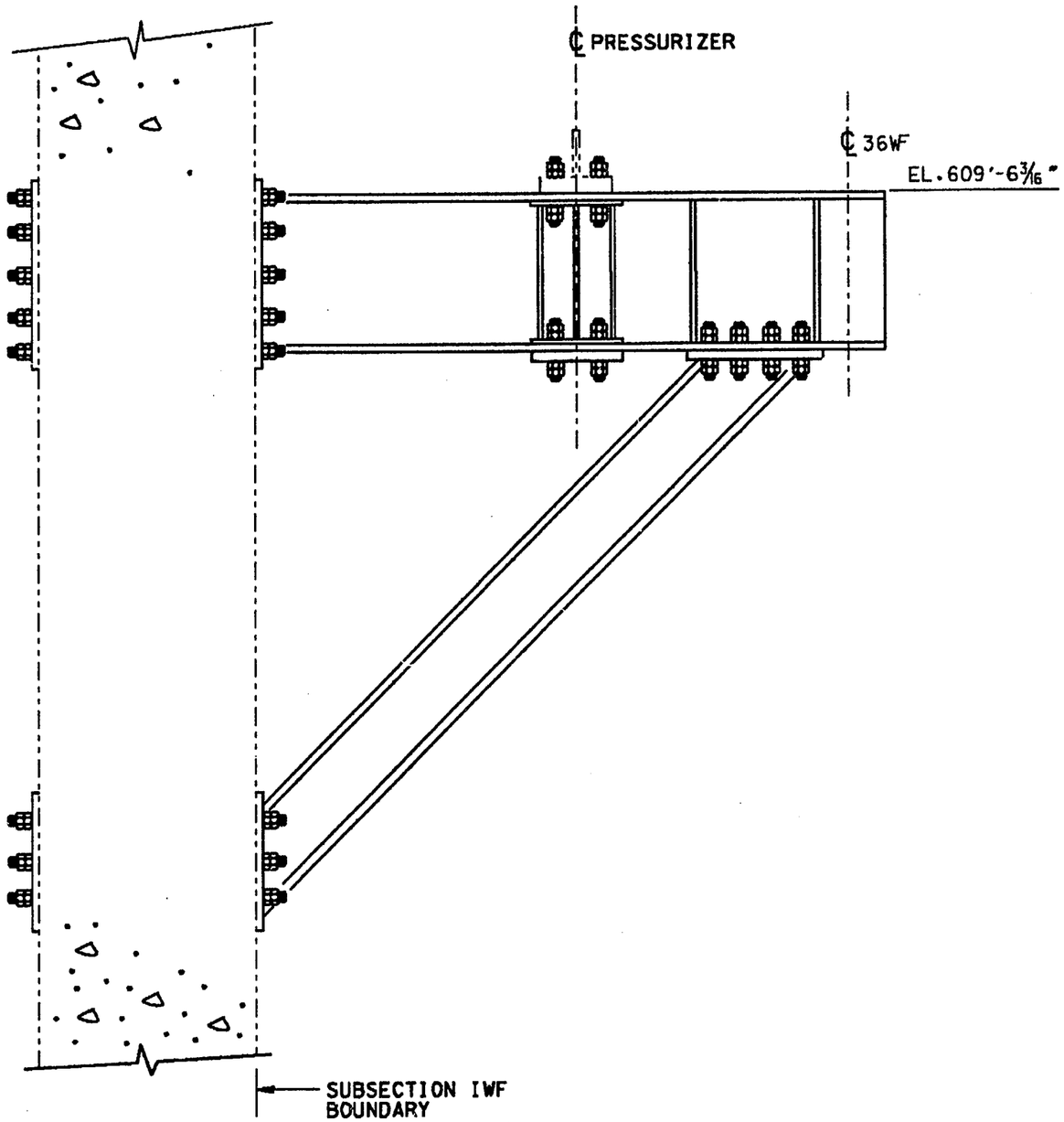

SECTION A-A

NOTES:

1. FOR EXAMINATION REQUIREMENTS, NOTES AND REFERENCES, SEE SHEET 1 OF THIS DRAWING.

REV.	DATE	DESCRIPTION	BY	CHK	ENGR	ENGR SUPV	ENG MGR
0	9/12/89	ISSUED FOR SECOND 10 YEAR INSERVICE INSPECTION INTERVAL	CB	RC	DRB	JJC/JJC	

SCALE N.T.S.	DESIGNED	DRAWN CB	DATE 5-3-89

DAVIS-BESSE NUCLEAR POWER STATION
UNIT NO. 1
THE TOLEDO EDISON COMPANY

Q

PRESSURIZER SUPPORTS
CONTAINMENT BUILDING

DRAWING NO.	REV.
ISI-SK-024 SHEET 2 OF 2	0

DFN=QS1:[55,7]ISI24SH2.DGN

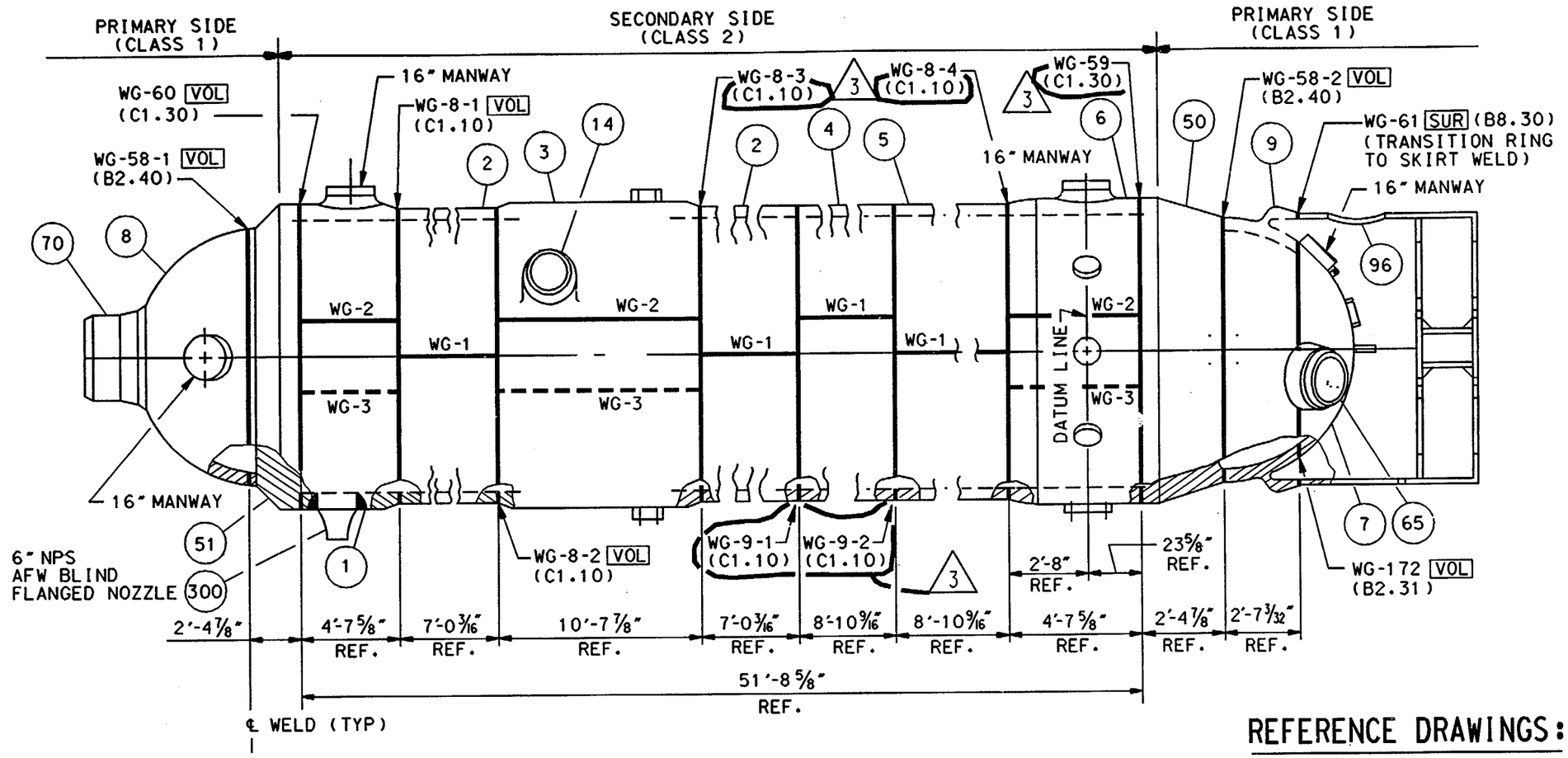

MARK #	DESCRIPTION	MATERIAL
1-6	SHELL SECTIONS	SA516 GR.70
7	LOWER HEAD	SA533 GR.B CL1
8	UPPER HEAD	SA533 GR.B CL1
9	TRANSITION RING	A508-67-CL2
14	24 IN. STEAM OUTLET NOZZLE (2)	A508-67-CL2
50	LOWER TUBE SHEET	A508-67-CL2
51	UPPER TUBE SHEET	A508-67-CL2
65	28 IN. PRIMARY OUTLET NOZZLE (2)	A508-67-CL2
70	36 IN. PRIMARY INLET NOZZLE	A508-67-CL2
96	SUPPORT SKIRT	SA533 GR.B CL1
84	GENERATOR TUBES (15,457)	SB-163
300	AUXILIARY FEEDWATER NOZZLE	A508-CL1

LEGEND

VOL - VOLUMETRIC EXAMINATION

SUR - SURFACE EXAMINATION

NOTES

1. THE WELD NUMBERS ON THE CLASS 1 PRIMARY SIDE ARE PRECEEDED BY "RC-SG-1- ".
2. THE WELD NUMBERS ON THE CLASS 2 SECONDARY SIDE ARE PRECEEDED BY "SP-SG-1- ".

REFERENCE DRAWINGS:

B&W 151906E RADIOGRAPHIC OUTLINE AND TECHNIQUE (TED #7749-M-506-91)

B&W 151912E SHELL AND TUBE SHEET ATTACHMENT ASSEMBLY (TED #7749-M-506-88)

B&W 151917E ASSEMBLY AND DETAIL OF LOWER HEAD (TED #7749-M-506-89)

B&W 151907E DET. OF TUBE SHEET (UPPER)

B&W 83255A LIST OF DRAWINGS

SCALE N.T.S.	DESIGNED	DRAWN CB	DATE 5-3-89

DAVIS-BESSE NUCLEAR POWER STATION
UNIT NO. 1
THE TOLEDO EDISON COMPANY

0

STEAM GENERATOR 1-1
SHELL AND HEAD WELDS
CONTAINMENT BUILDING

DRAWING NO.	REV.
ISI-SK-030	3

DB DATE: 07-31-00 DFN=J:/ISI/ISISK030.DGN

REV.	DATE	DESCRIPTION
3	8-21-00	INC. DCN ISI-SK-030-3 PER DDR 00-1766
2	9-24-92	INC. DCN'S ISI-SK-030-1 & 2 FOR DCR 91-0011
1	5-20-90	ISSUED FOR SECOND 10 YEAR INSERVICE INSPECTION INTERVAL

JOR | BY | CHK | ENGR | ENGR SUPV | ENG MGR
"INITIALS ON FILE" | "INITIALS ON FILE"

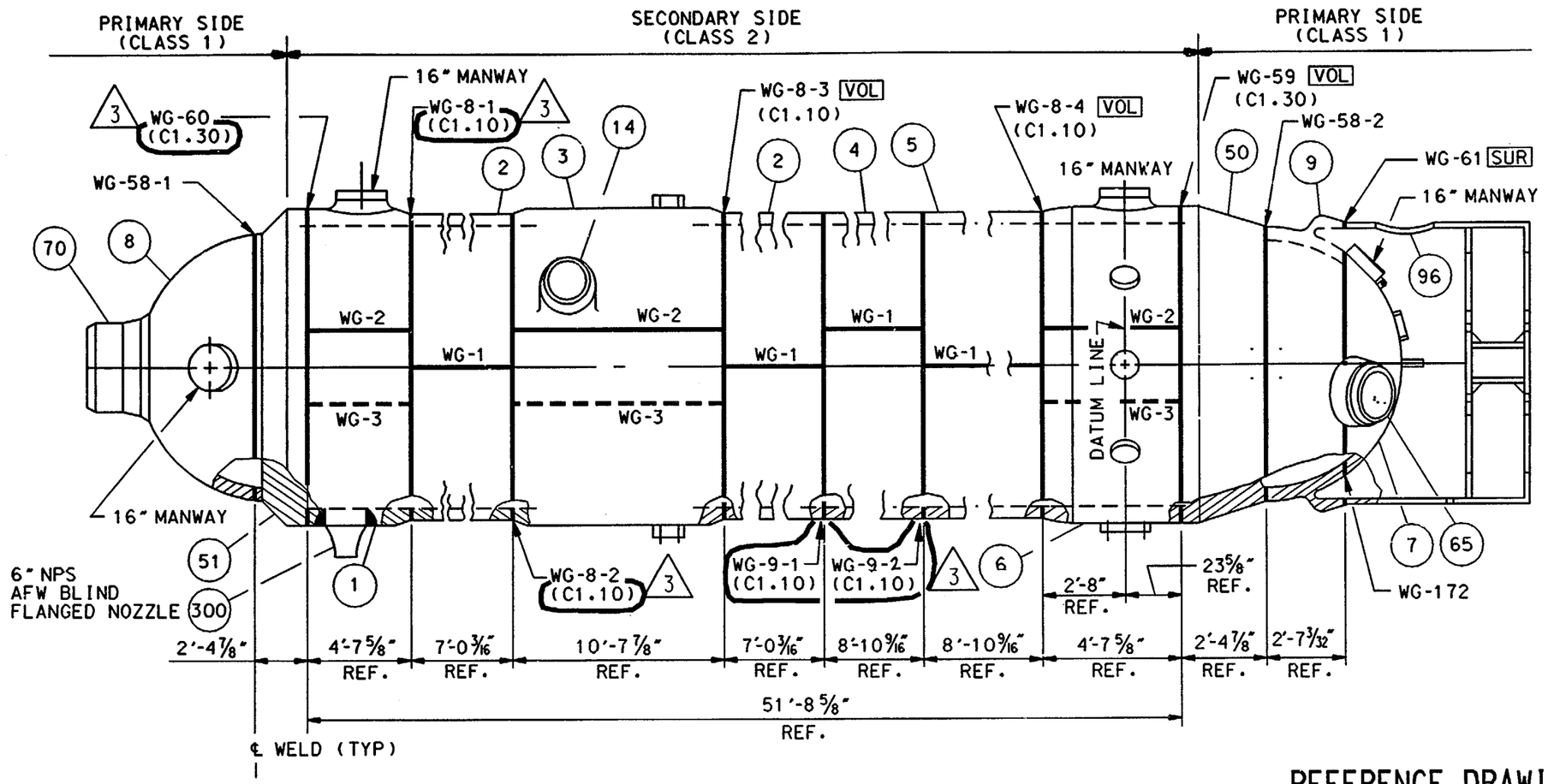

REFERENCE DRAWINGS:

B&W 151906E RADIOGRAPHIC OUTLINE AND TECHNIQUE (TED #7749-M-506-91)

B&W 151912E SHELL AND TUBE SHEET ATTACHMENT ASSEMBLY (TED #7749-M-506-88)

B&W 151917E ASSEMBLY AND DETAIL OF LOWER HEAD (TED #7749-M-506-89)

MARK #	DESCRIPTION	MATERIAL
1-6	SHELL SECTIONS	SA516 GR.70
7	LOWER HEAD	SA533 GR.B CL1
8	UPPER HEAD	SA533 GR.B CL1
9	TRANSITION RING	A508-67-CL2
14	24 IN. STEAM OUTLET NOZZLE (2)	A508-67-CL2
50	LOWER TUBE SHEET	A508-67-CL2
51	UPPER TUBE SHEET	A508-67-CL2
65	28 IN. PRIMARY OUTLET NOZZLE (2)	A508-67-CL2
70	36 IN. PRIMARY INLET NOZZLE	A508-67-CL2
96	SUPPORT SKIRT	SA533 GR.B CL1
84	GENERATOR TUBES (15,487)	SB-163
300	AUXILIARY FEEDWATER NOZZLE	A508-CL1

LEGEND

VOL - VOLUMETRIC EXAMINATION

SUR - SURFACE EXAMINATION

NOTES

1. THE WELD NUMBERS ON THE CLASS 1 PRIMARY SIDE ARE PRECEEDED BY "RC-SG-2- ".
2. THE WELD NUMBERS ON THE CLASS 2 SECONDARY SIDE ARE PRECEEDED BY "SP-SG-2- ".

SCALE N.T.S.	DESIGNED	DRAWN CB	DATE 5-3-89

DAVIS-BESSE NUCLEAR POWER STATION
UNIT NO. 1
THE TOLEDO EDISON COMPANY

STEAM GENERATOR 1-2
SHELL AND HEAD WELDS
CONTAINMENT BUILDING

DRAWING NO.	REV.
ISI-SK-031	3

DB DATE: 07-31-00 DFN=J:/ISI/ISISK031.DGN

REV.	DATE	DESCRIPTION
3	8-21-00	INC. DCN ISI-SK-031-3 PER DDR 00-1766
2	9-24-92	INC. DCN'S ISI-SK-031-1 & 2 FOR DCR 91-0011
1	9-20-90	ISSUED FOR SECOND 10 YEAR INSERVICE INSPECTION INTERVAL

BY	CHK	ENGR	ENGR SUPV	ENG MGR
JOR	SBW	"INITIALS ON FILE"	"INITIALS ON FILE"	MMS

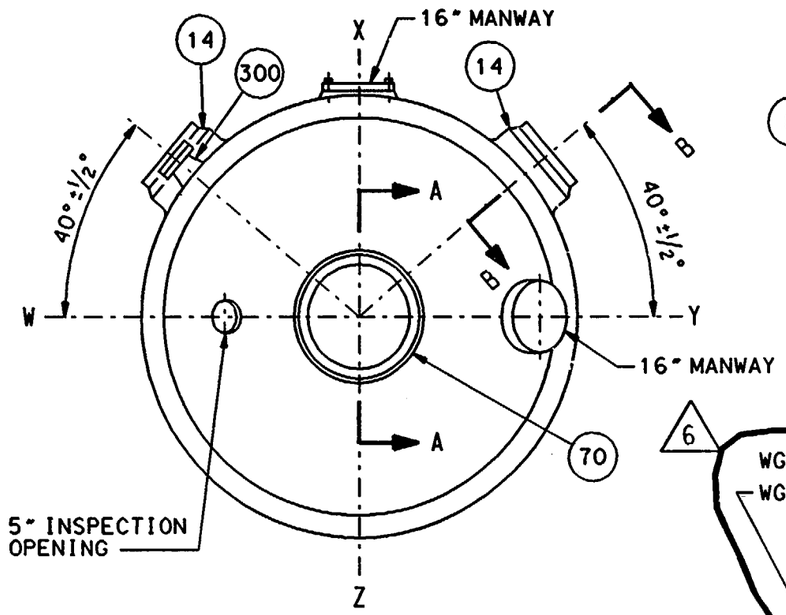

TOP VIEW
W-AXIS FACES SOUTH
6

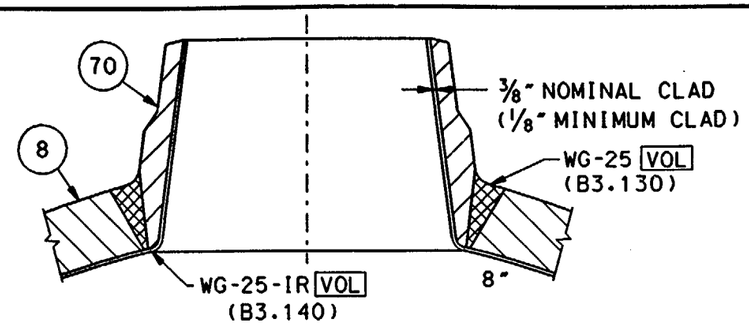

SECTION A-A
PRIMARY INLET NOZZLE

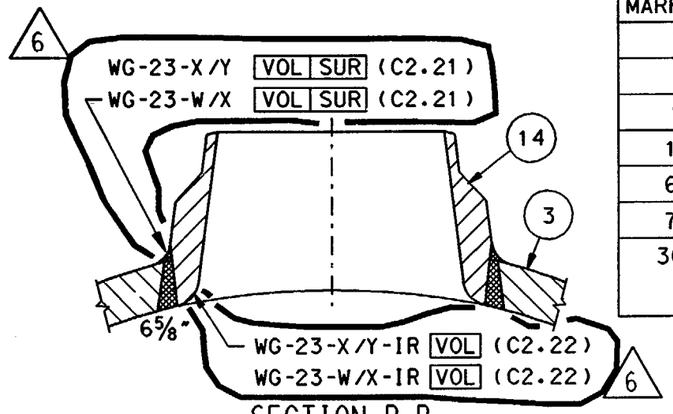

SECTION B-B
SECONDARY STEAM OUTLET NOZZLE
(TYP.2 NOZZLES)

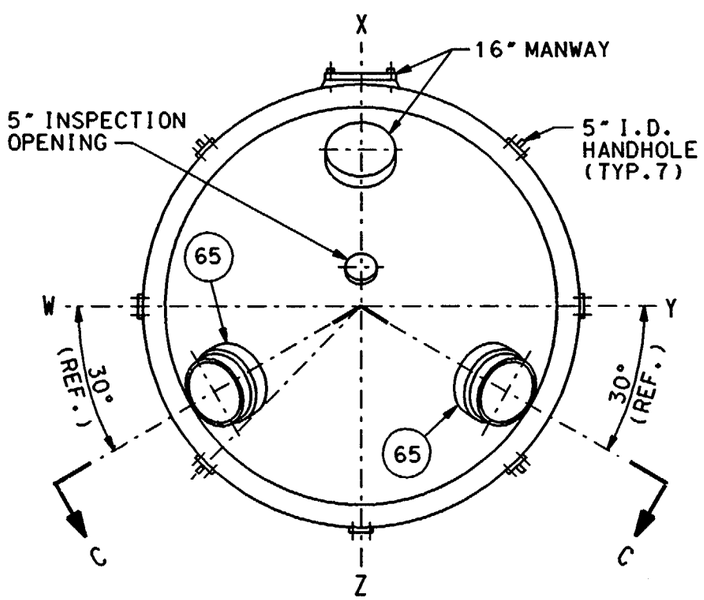

BOTTOM VIEW
(WITH SKIRT OMITTED)
W-AXIS FACES SOUTH
6

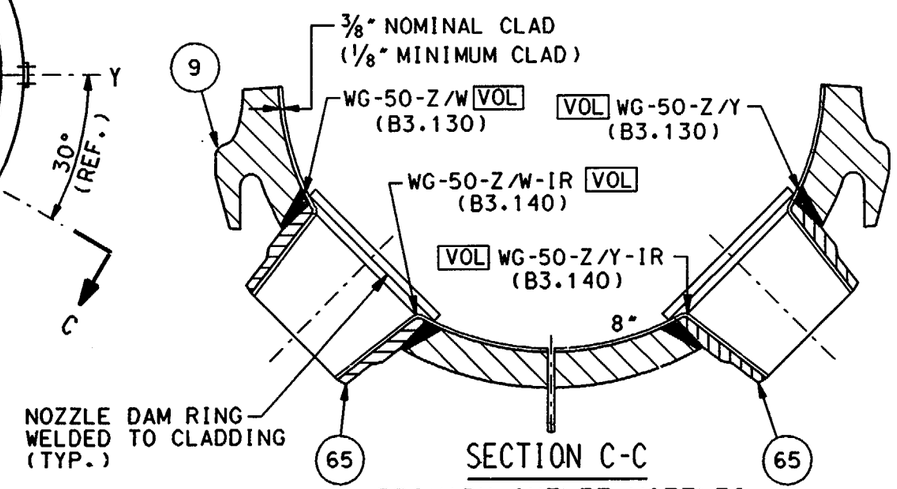

SECTION C-C
PRIMARY OUTLET NOZZLES

LEGEND:

VOL - VOLUMETRIC EXAMINATION
SUR - SURFACE EXAMINATION

NOTES:

1. THE WELD NUMBERS ON THE CLASS 1 PRIMARY SIDE ARE PRECEEDED BY "RC-SG-1-" AND THE WELD NUMBERS ON THE SECONDARY SIDE ARE PRECEEDED BY "SP-SG-1-"
2. A 6 IN. 600# BLIND FLANGE AND 6 IN.600# WELD NECK FLANGE ARE INSTALLED ON THE MK 300 AUXILIARY FEEDWATER NOZZLE.

MARK NO.	DESCRIPTION	MATERIAL
3	SHELL SECTION	SA516 GR.70
7	LOWER HEAD	SA533 GR.B CL1
9	TRANSITION RING	A508-67 CL2
14	24 IN. DIA. STEAM OUTLET NOZZLE (2)	A508-67 CL2
65	28 IN. DIA. PRIMARY OUTLET NOZZLE (2)	A508-67 CL2
70	36 IN. DIA. PRIMARY INLET NOZZLE	A508-67 CL1
300	6 IN. DIA. AUX. FEEDWATER NOZZLE (WITH 6 IN. WELD NECK FLANGE AND 6 IN. BLIND FLANGE)	SA508 CL1

REFERENCE DRAWINGS:

B&W 109519D DETAILS AND SUB-ASSEMBLY OF 24 IN. STEAM OUTLET NOZZLES

B&W 1148506E LONGITUDINAL SECTION THRU STEAM GENERATOR WITH FIELD MODIFICATIONS (TED #7749-M-506-85)

B&W 1148507E GENERAL OUTLINE OF STEAM GENERATOR WITH FIELD MODIFICATIONS (TED #7749-M-506-83)

B&W 151912E SHELL AND TUBE SHEET ATTACHMENT ASSEMBLY (TED# 7749-M-506-88)

B&W 151916E ASSEMBLY AND DETAIL OF UPPER HEAD (TED# 7749-M-506-90)

B&W 151917E ASSEMBLY AND DETAIL OF LOWER HEAD (TED# 7749-M-506-89)

SCALE N.T.S.	DESIGNED	DRAWN WME	DATE 5-3-89

DAVIS-BESSE NUCLEAR POWER STATION
UNIT NO. 1
THE TOLEDO EDISON COMPANY

STEAM GENERATOR 1-1
NOZZLE WELDS
CONTAINMENT BUILDING

DRAWING NO.	REV.
ISI-SK-032	6

DB DATE: 08-01-00 DFN=J:/ISI/ISISK032.DGN

REV.	DATE	DESCRIPTION
5	3-8-99	INC. DCN ISI-SK-032-4 PER DDR 98-0591
6	8-21-00	INC. DCN ISI-SK-032-5 PER DDR 00-1766
1	9-20-90	ISSUED FOR SECOND 10 YEAR INSERVICE INSPECTION INTERVAL

"INITIALS ON FILE"						
JOR	SBW	JBG/JJS	TWB	MDS	ENGR SUPV	ENG MGR
WME			ENGR			ECC
BY		CHK				

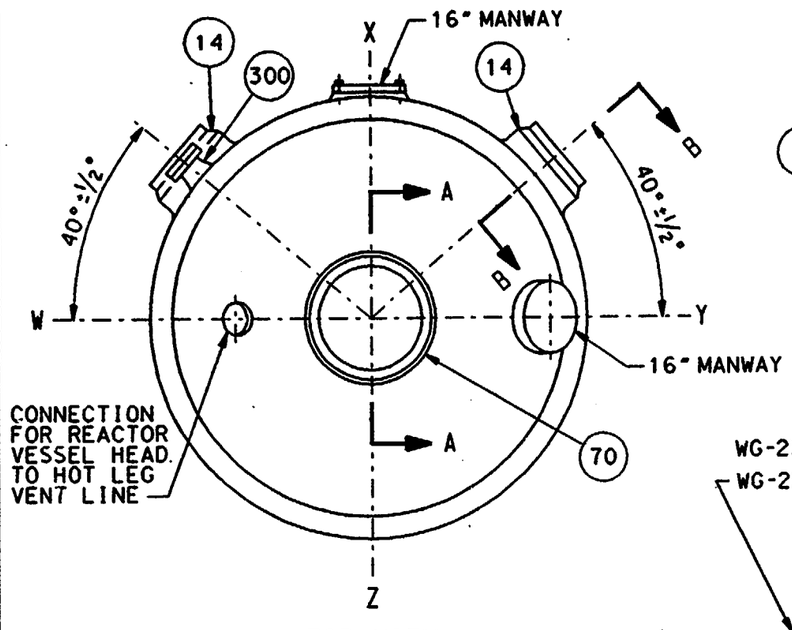

TOP VIEW

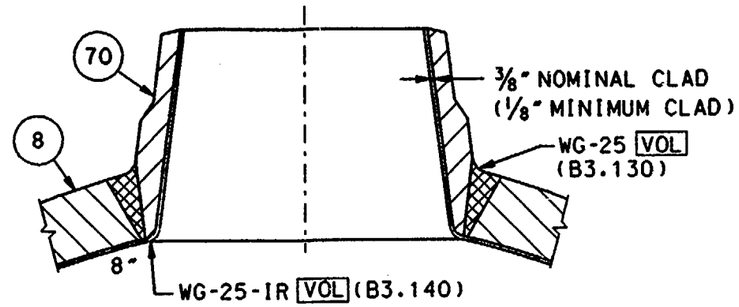

SECTION A-A

PRIMARY INLET NOZZLE

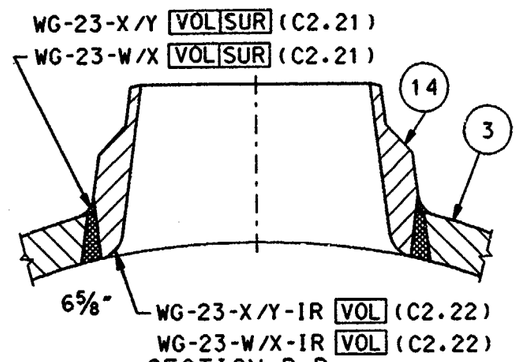

SECTION B-B

SECONDARY STEAM OUTLET NOZZLE

(TYP.2 NOZZLES)

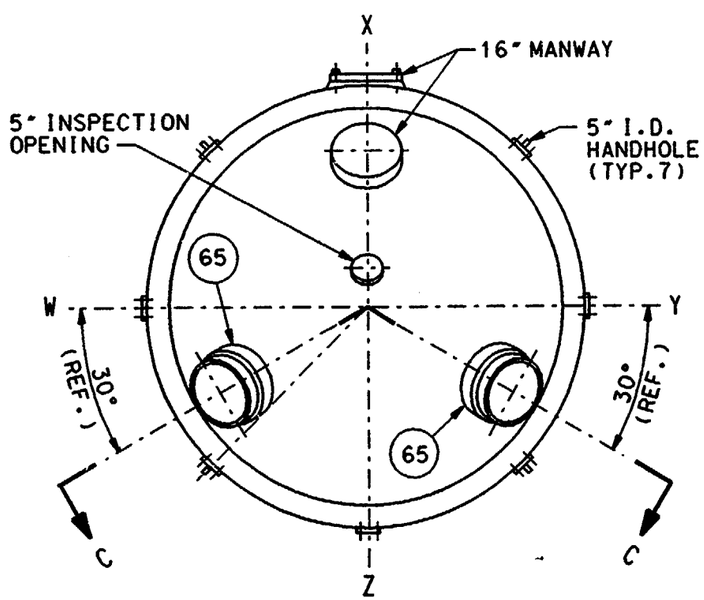

BOTTOM VIEW

(WITH SKIRT OMITTED)

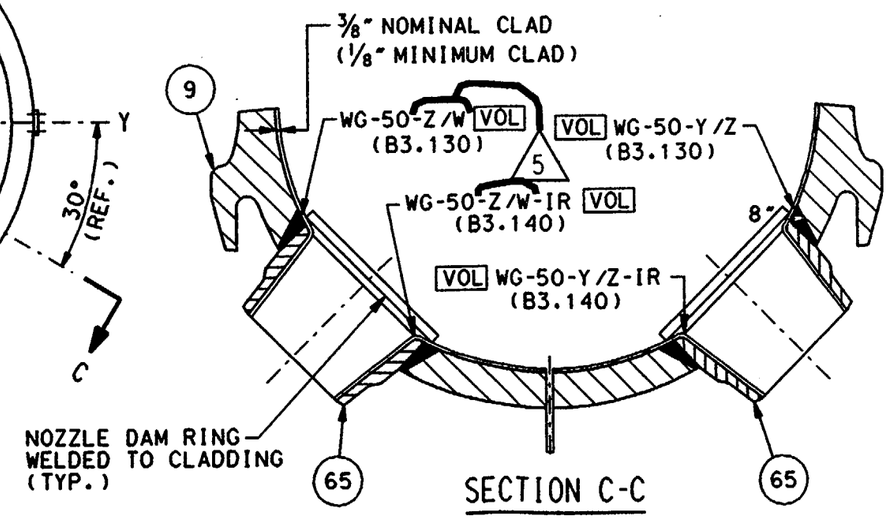

SECTION C-C

PRIMARY OUTLET NOZZLES

LEGEND:

VOL - VOLUMETRIC EXAMINATION

SUR - SURFACE EXAMINATION

NOTES:

1. THE WELD NUMBERS ON THE CLASS 1 PRIMARY SIDE ARE PRECEEDED BY "RC-SG-2-" AND THE WELD NUMBERS ON THE SECONDARY SIDE ARE PRECEEDED BY "SP-SG-2-"
2. A 6 IN. 600# BLIND FLANGE AND 6 IN.600# WELD NECK FLANGE ARE INSTALLED ON THE MK 300 AUXILIARY FEEDWATER NOZZLE.

MARK NO.	DESCRIPTION	MATERIAL
3	SHELL SECTION	SA516 GR.70
7	LOWER HEAD	SA533 GR.B CL1
9	TRANSITION RING	A508-67 CL2
14	24 IN. DIA. STEAM OUTLET NOZZLE (2)	A508-67 CL2
65	28 IN. DIA. PRIMARY OUTLET NOZZLE (2)	A508-67 CL2
70	36 IN. DIA. PRIMARY INLET NOZZLE	A508-67 CL1
300	6 IN. DIA. AUX. FEEDWATER NOZZLE (WITH 6 IN. WELD NECK FLANGE AND 6 IN. BLIND FLANGE)	SA508 CL1

REFERENCE DRAWINGS:

B&W 109519D DETAILS AND SUB-ASSEMBLY OF 24 IN. STEAM OUTLET NOZZLES

B&W 1148506E LONGITUDINAL SECTION THRU STEAM GENERATOR WITH FIELD MODIFICATIONS (TED #7749-M-506-85)

B&W 1148507E GENERAL OUTLINE OF STEAM GENERATOR WITH FIELD MODIFICATIONS (TED #7749-M-506-83)

B&W 151912E SHELL AND TUBE SHEET ATTACHMENT ASSEMBLY (TED# 7749-M-506-88)

B&W 151916E ASSEMBLY AND DETAIL OF UPPER HEAD (TED# 7749-M-506-90)

B&W 151917E ASSEMBLY AND DETAIL OF LOWER HEAD (TED# 7749-M-506-89)

SCALE N.T.S.	DESIGNED	DRAWN WME	DATE 5-3-89

DAVIS-BESSE NUCLEAR POWER STATION
UNIT NO. 1
THE TOLEDO EDISON COMPANY

Q

STEAM GENERATOR 1-2
NOZZLE WELDS
CONTAINMENT BUILDING

DRAWING NO.	REV.
ISI-SK-033	5

DB DATE: 10-13-98 DFN=J:/ISI/ISISK033.DGN

REV.	DATE	DESCRIPTION
5	3-8-99	INC. DCN ISI-SK-033-4 PER DDR 98-0591
4	06-23-94	INC. DCN ISI-SK-033-3 FOR RFA 94-0108
1	9-20-90	ISSUED FOR SECOND 10 YEAR INSERVICE INSPECTION INTERVAL

JOR	SBW		
WME	JBG/JJS	"INITIALS ON FILE"	
BY	CHK	TWB	MDS
	ENGR	ENGR SUPV	ECC
			ENG MGR

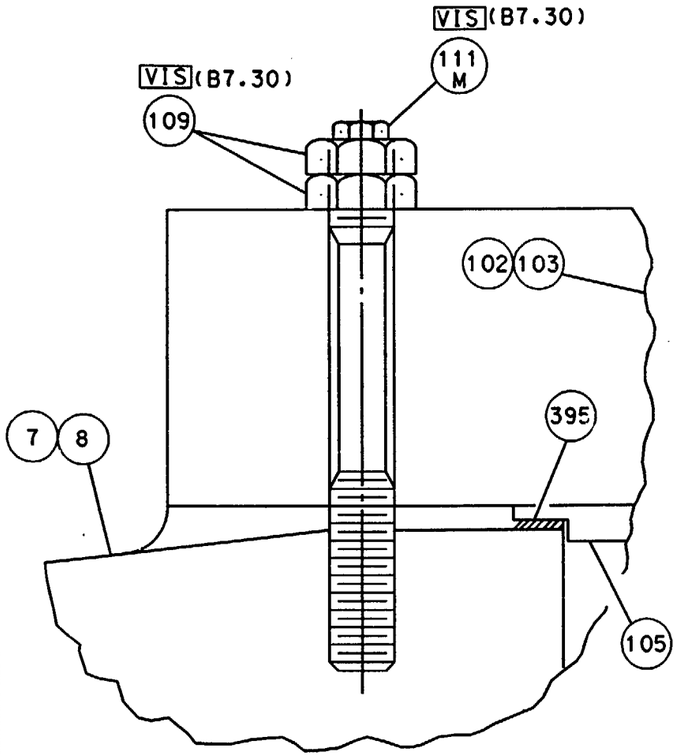

PRIMARY MANWAY ASSEMBLY
DETAIL A

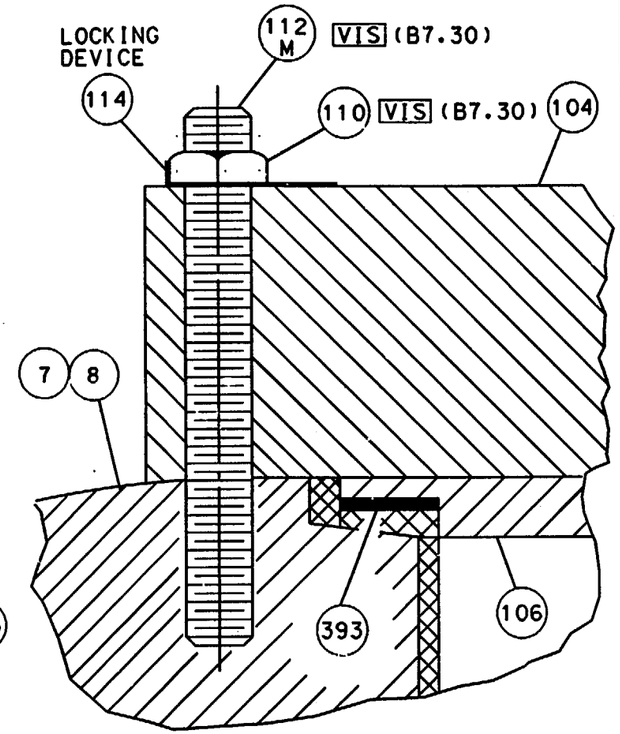

PRIMARY INSPECTION OPENING ASSEMBLY
DETAIL B

MARK #	DESCRIPTION	MATERIAL
7	LOWER HEAD	SA533 GRB CL1
8	UPPER HEAD	SA533 GRB CL1
102/103	PRIMARY MANWAY COVER	SA516 GR70
104	PRIMARY INSPECTION OPENING COVER	SA516 GR70
105	PRIMARY MANWAY BACKING PLATE	SA240 TP304
106	PRIMARY INSPECTION OPENING BACKING PLATE	SA240 TP304
109	2 IN. HVY. HEX. NUT FOR MANWAY	SA194 GR7
110	1 IN. HVY. HEX. NUT FOR INSPECTION OPENING	SA194 GR7
111M	2 IN. STUD FOR MANWAY	SA320
112M	1 IN. STUD FOR INSPECTION OPENING	SA320
393/395	FLEXITALLIC GASKET	N/A

LEGEND

VIS - VISUAL (VT-1) EXAMINATION

NOTES

1. THE EXAMINATION IDENTIFICATION NUMBER IS PRECEEDED BY "RC- ".
2. THE STUDS AND NUTS FOR THE CONNECTION BETWEEN THE REACTOR VESSEL HEAD TO HOT LEG VENT LINE AND THE UPPER INSPECTION OPENING OF STEAM GENERATOR 1-2 ARE EXAMINED UNDER ASME SECTION XI EXAMINATION CATEGORY B-G-2, ITEM NO. B7.50.
3. THERE ARE NO BOLTS, STUDS OR NUTS IN THE CLASS 2 SECONDARY SIDE OF THE STEAM GENERATORS THAT FALL UNDER ASME SECTION XI EXAMINATION CATEGORY C-D.

REFERENCE DRAWINGS:

B&W 1148509E LIST OF MATERIAL FOR FIELD MOD.

B&W 1148506E LONGITUDINAL SECTION THRU STEAM GENERATORS WITH FIELD MODIFICATIONS (TED #7749-M-506-85)

B&W 1148507E GENERAL OUTLINE OF STEAM GENERATORS WITH FIELD MODIFICATIONS (TED #7749-M-506-83).

B&W 1132175 OTSG PRIMARY MANWAY STUD (TED #7749-M-506-96)

B&W 135464A OTSG PRIMARY INSPECTION OPENING STUD

STEAM GEN. NO.	BOLTED ASSEMBLY	EXAMINATION I.D. NO.	DESCRIPTION	QTY.	ASME SECTION XI EXAMINATION
1-1	UPPER PRIMARY MANWAY	SG-1-MK-111M-1 SG-1-MK-109-1	2 IN. DIA STUD 2 IN. DIA HVY HEX NUT	16 32	VT-1 VT-1
	LOWER PRIMARY MANWAY	SG-1-MK-111M-2 SG-1-MK-109-2	2 IN. DIA STUD 2 IN. DIA HVY HEX NUT	16 32	VT-1 VT-1
	UPPER PRIMARY INSPECTION OPENING	SG-1-MK-112M-1 SG-1-MK-110-1	1 IN. DIA STUD 1 IN. DIA HVY HEX NUT	12 12	VT-1 VT-1
	LOWER PRIMARY INSPECTION OPENING	SG-1-MK-112M-2 SG-1-MK-110-2	1 IN. DIA STUD 1 IN. DIA HVY HEX NUT	12 12	VT-1 VT-1
1-2	UPPER PRIMARY MANWAY	SG-2-MK-111M-1 SG-2-MK-109-1	2 IN. DIA STUD 2 IN. DIA HVY HEX NUT	16 32	VT-1 VT-1
	LOWER PRIMARY MANWAY	SG-2-MK-111M-2 SG-2-MK-109-2	2 IN. DIA STUD 2 IN. DIA HVY HEX NUT	16 32	VT-1 VT-1
	UPPER PRIMARY INSPECTION OPENING	NOTE 2			
	LOWER PRIMARY INSPECTION OPENING	SG-2-MK-112M-2 SG-2-MK-110-2	1 IN. DIA STUD 1 IN. DIA HVY HEX NUT	12 12	VT-1 VT-1

SCALE	DESIGNED	DRAWN	DATE

DAVIS-BESSE NUCLEAR POWER STATION
UNIT NO. 1
THE TOLEDO EDISON COMPANY

Q

STEAM GENERATOR 1-1 AND 1-2
BOLTING DETAILS - PRIMARY SIDE
CONTAINMENT BUILDING

DRAWING NO.	REV.
ISI-SK-034	1

REV.	DATE	DESCRIPTION	BY	CHK	ENGR	ENGR SUPV	ENG MGR
1	9-20-90	ISSUED FOR SECOND 10 YEAR INSERVICE INSPECTION INTERVAL	WME				

DFN=QS1:[55,7]ISISK034.DGN

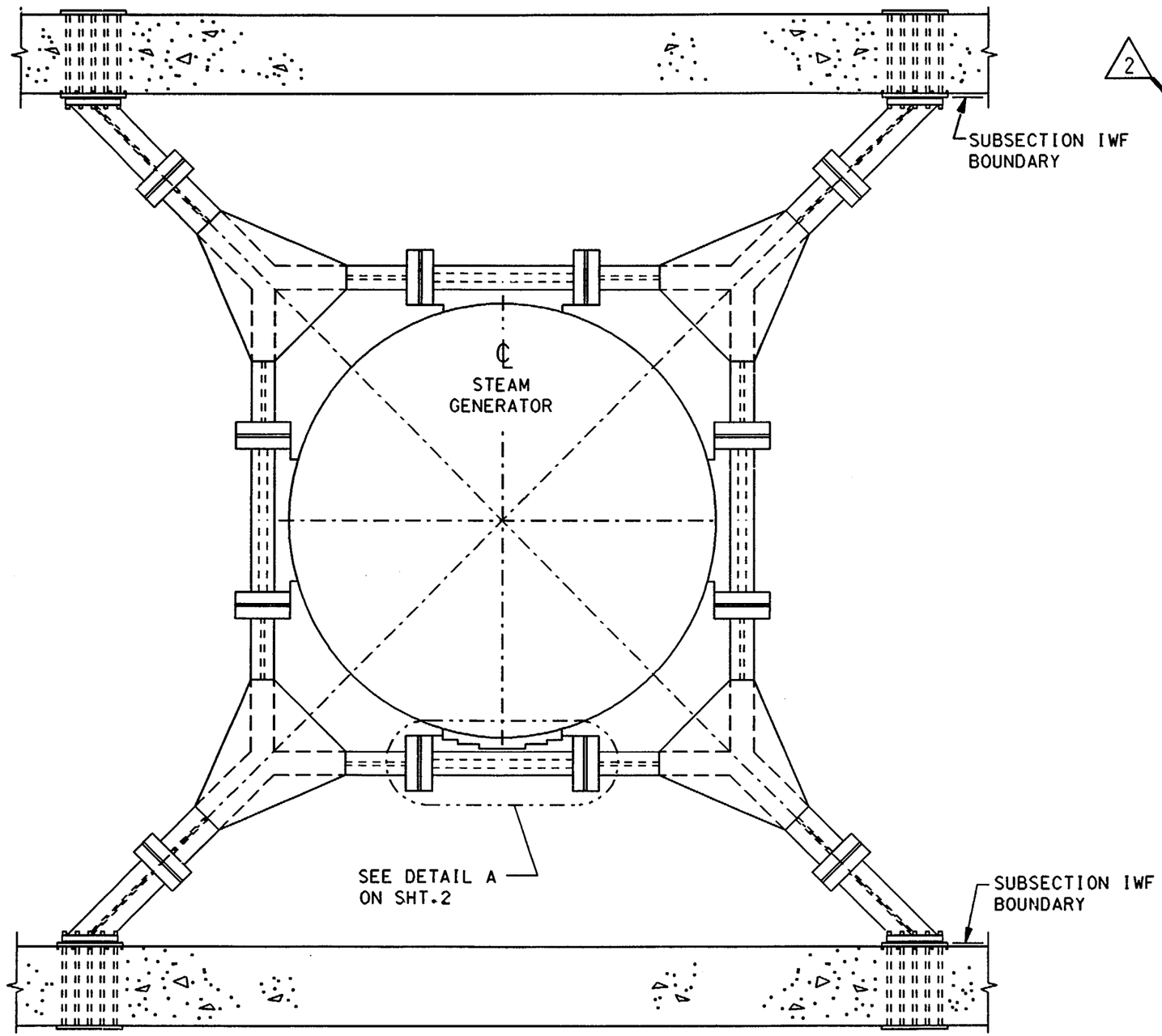

PLAN VIEW
ABOVE EL.630'-0"

NOTES:

1. A VT-3 EXAMINATION SHALL BE PERFORMED ON THE SUPPORTS FOR ONE OF THE TWO STEAM GENERATORS.
2. THE ASME SECTION XI ITEM NUMBER IS F1.40. (2)
3. THE SUPPORT FOR STEAM GENERATOR 1-2 IS THE SAME AS SHOWN, EXCEPT ROTATE 180°.

REFERENCE DRAWINGS:

C-178 STEAM GENERATOR UPPER SUPPORT PLAN AND SECTIONS, SHEET 1.

C-179 STEAM GENERATOR UPPER SUPPORT DETAILS, SHEET 2.

B&W 120100D UPPER LATERAL SUPPORT EREC ION ASSEMBLY (TED #7749-M-506-29).

B&W 120101D UPPER LATERAL SUPPORT ASSEMBLY AND DETAILS (TED #7749-M-506-43).

REV.	DATE	DESCRIPTION
2	8/24	INC DCN ISI-SK-035-2 PER DDR 00-1766
1	9/22/92	INC DCN ISI-SK-035-1 FOR DCR 91-0011
0	9/12/89	ISSUED FOR SECOND 10 YEAR INSERVICE INSPECTION INTERVAL

BY	CHK	ENGR	ENGR SUPV	ENG MGR
JOR	SBW	"INITIALS ON FILE"	"INITIALS ON FILE"	

SCALE N.T.S.	DESIGNED	DRAWN CB	DATE 5-26-89

DAVIS-BESSE NUCLEAR POWER STATION
UNIT NO. 1
THE TOLEDO EDISON COMPANY

0

STEAM GENERATORS 1-1 AND 1-2
UPPER LATERAL SUPPORTS

DRAWING NO.	REV.
ISI-SK-035 SHEET 1	2

DB:08-01-00 DFN=J:/ISI/ISI35SH1.DGN

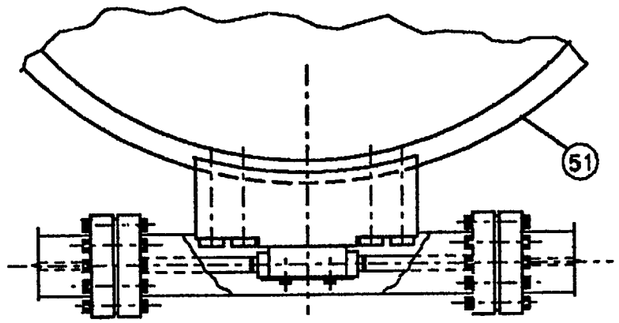

DETAIL A
PLAN VIEW

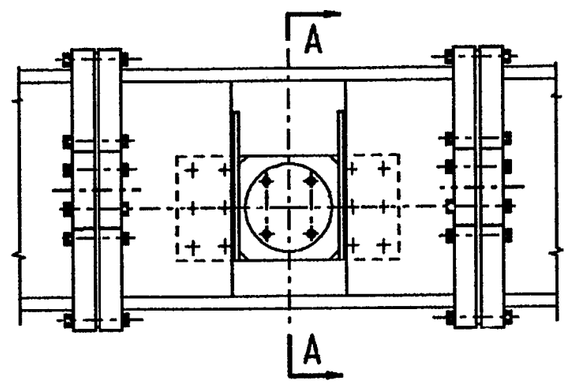

SIDE VIEW

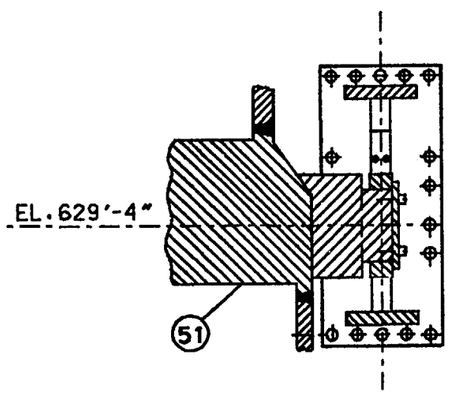

SECTION A-A

NOTES:

1. FOR GENERAL NOTES AND REFERENCES, SEE SHEET 1.

REV.	DATE	DESCRIPTION	BY	CHK	ENGR	ENGR SUPV	ENG MGR
0	9/12/89	ISSUED FOR SECOND 10 YEAR INSERVICE INSPECTION INTERVAL	CB	PJC	JRB	LLC/EVC	EE

SCALE N.T.S.	DESIGNED	DRAWN CB	DATE 5-26-89

DAVIS-BESSE NUCLEAR POWER STATION
UNIT NO. 1
THE TOLEDO EDISON COMPANY

Q

STEAM GENERATORS 1-1 AND 1-2
UPPER LATERAL SUPPORTS

DRAWING NO.	REV.
ISI-SK-035 SHEET 2 OF 2	0

DFN=QS1:[55,7]ISI35SH2.DGN

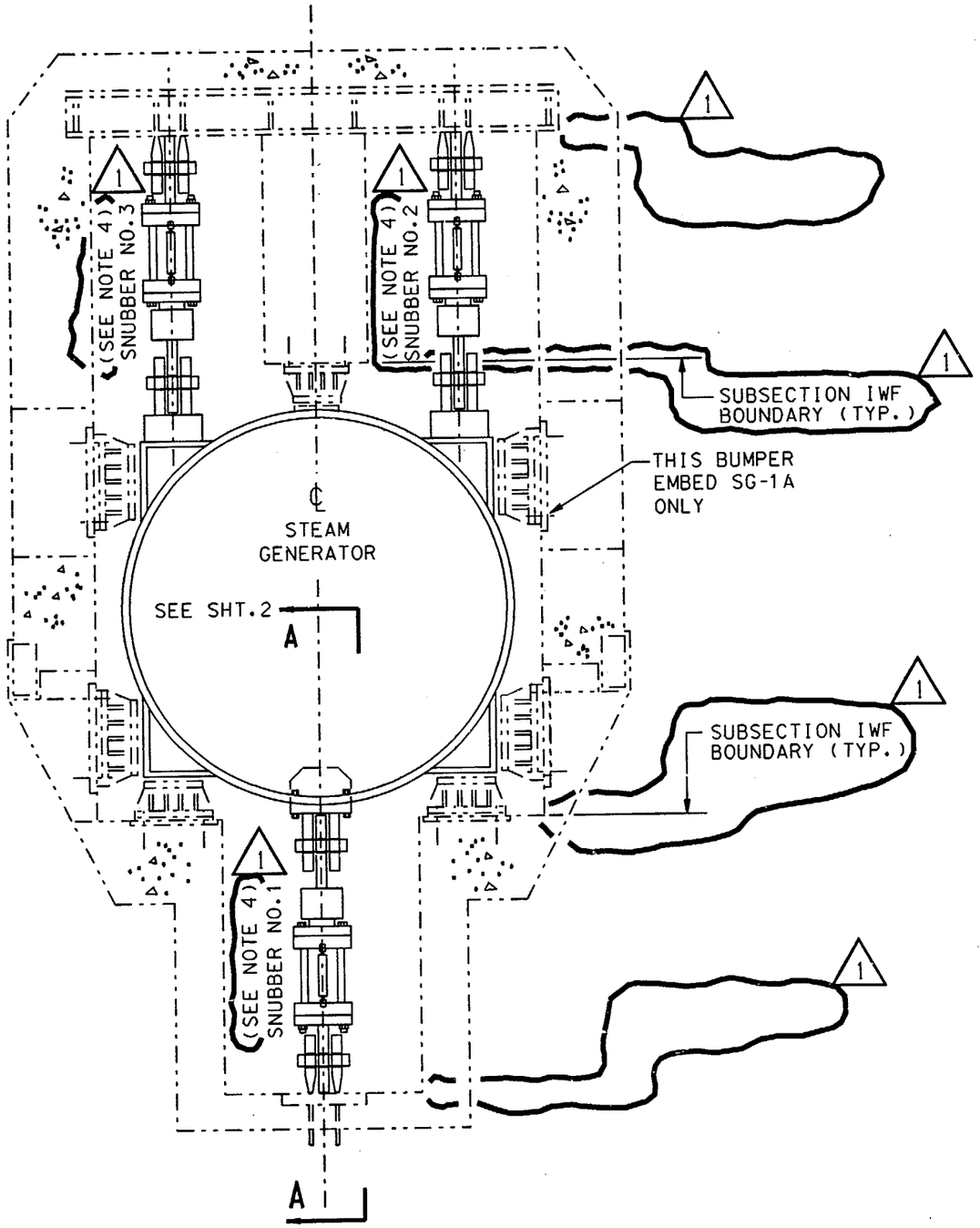

PLAN VIEW
ABOVE EL.565'-10"

NOTES:

1. THE LOWER SUPPORTS FOR EACH STEAM GENERATOR CONSIST OF THE SUPPORT SKIRT, SLIDING SUPPORT, BASE PLATE AND BUMPER ASSEMBLIES.
2. A VT-3 EXAMINATION SHALL BE PERFORMED ON THE SUPPORTS FOR ONE OF THE TWO STEAM GENERATORS. THE EXAMINATION SHALL BE PERFORMED FROM THE INTEGRAL ATTACHMENT WELD (WELD WG-61 ON DRAWING ISI-SK-030) TO THE BOLTED CONNECTION TO THE BUILDING STRUCTURE (SOLE PLATE).
3. THE SUPPORTS FOR STEAM GENERATOR 1-2 ARE THE SAME AS SHOWN, EXCEPT OPPOSITE HAND ON THE WEST SIDE.
4. THE THREE HYDRAULIC SNUBBERS ON EACH STEAM GENERATOR HAVE BEEN DISABLED AND ABANDONED IN PLACE AND THEREFORE ARE NO LONGER PART OF THE S.G. LOWER SUPPORT STRUCTURE. (REF. MOD. 90-0079 SUPP.0

REFERENCE DRAWINGS:

C-167 CONTAINMENT INTERNAL STRUCTURES
STEAM GENERARAOR FOUNDATIONS, SHEET 3.

B&W 151929E ASSEMBLY AND DETAIL OF
SLIDING SUPPORT (TED# 7749-M-506-26).

B&W 145210E, ASSY.& DETAIL OF LOWER
RESTRAINT (TE#M506-23)

REV.	DATE	DESCRIPTION	BY	CHK	ENGR	ENGR SUPV	ENG MGR
1	6/30/92	INC. DCN ISI-SK-036-1 FOR MOD. 90-0079 SUPP. 0	JAD				
0	9-12-89	ISSUED FOR SECOND 10 YEAR INSERVICE INSPECTION INTERVAL					

"INITIALS ON FILE"

SCALE N.T.S.	DESIGNED	DRAWN CB	DATE 5-26-89

DAVIS-BESSE NUCLEAR POWER STATION
UNIT NO. 1
THE TOLEDO EDISON COMPANY

Q

STEAM GENERATORS 1-1 AND 1-2
LOWER SUPPORTS

DRAWING NO.	REV.
ISI-SK-036 SHEET 1	1

DB 5-14-92

DFN=QS1:[55,7]ISI3SSH1.DGN

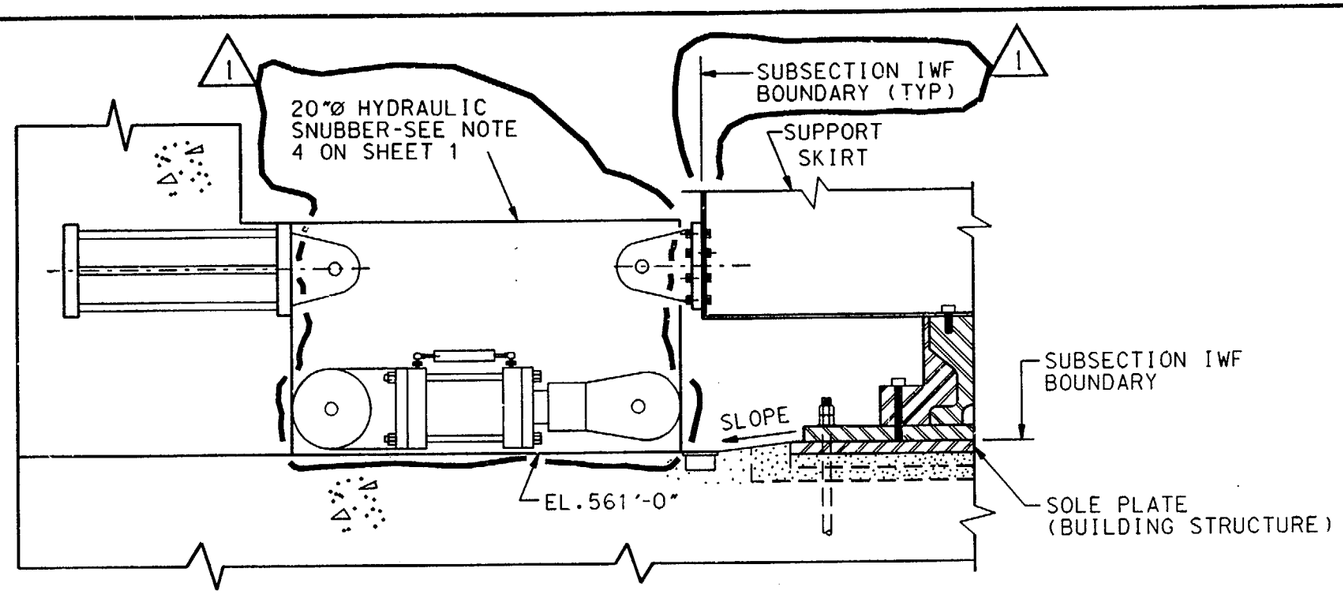

SECTION A-A

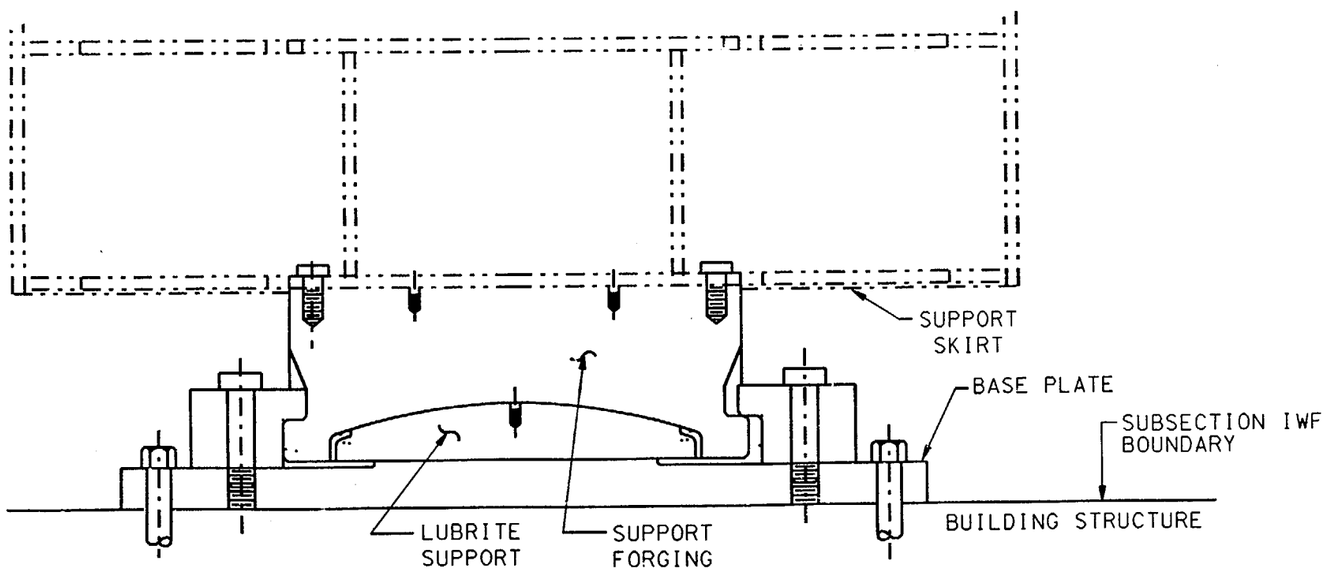

SLIDING SUPPORT DETAIL

NOTES:

1. FOR GENERAL NOTES AND REFERENCES SEE SHEET 1.

REV.	DATE	DESCRIPTION
1	7/24/92	INC DCN ISI-SK-036-3 FOR MOD 90-0079 SUPP.0
0	9/12/89	ISSUED FOR SECOND 10 YEAR INSERVICE INSPECTION INTERVAL

BY	CHK	ENGR	ENGR SUPV	ENG MGR
JOR	-	JJS	-	-

"INITIALS ON FILE"

SCALE N.T.S.	DESIGNED	DRAWN CB	DATE 5-26-89

DAVIS-BESSE NUCLEAR POWER STATION
UNIT NO. 1
THE TOLEDO EDISON COMPANY

Q

STEAM GENERATORS 1-1 AND 1-2
LOWER SUPPORTS

DRAWING NO.	REV.
ISI-SK-036 SHEET 2	1

DG:09-01-92 DFN=F:/ISI/ISI36SH2.DGN

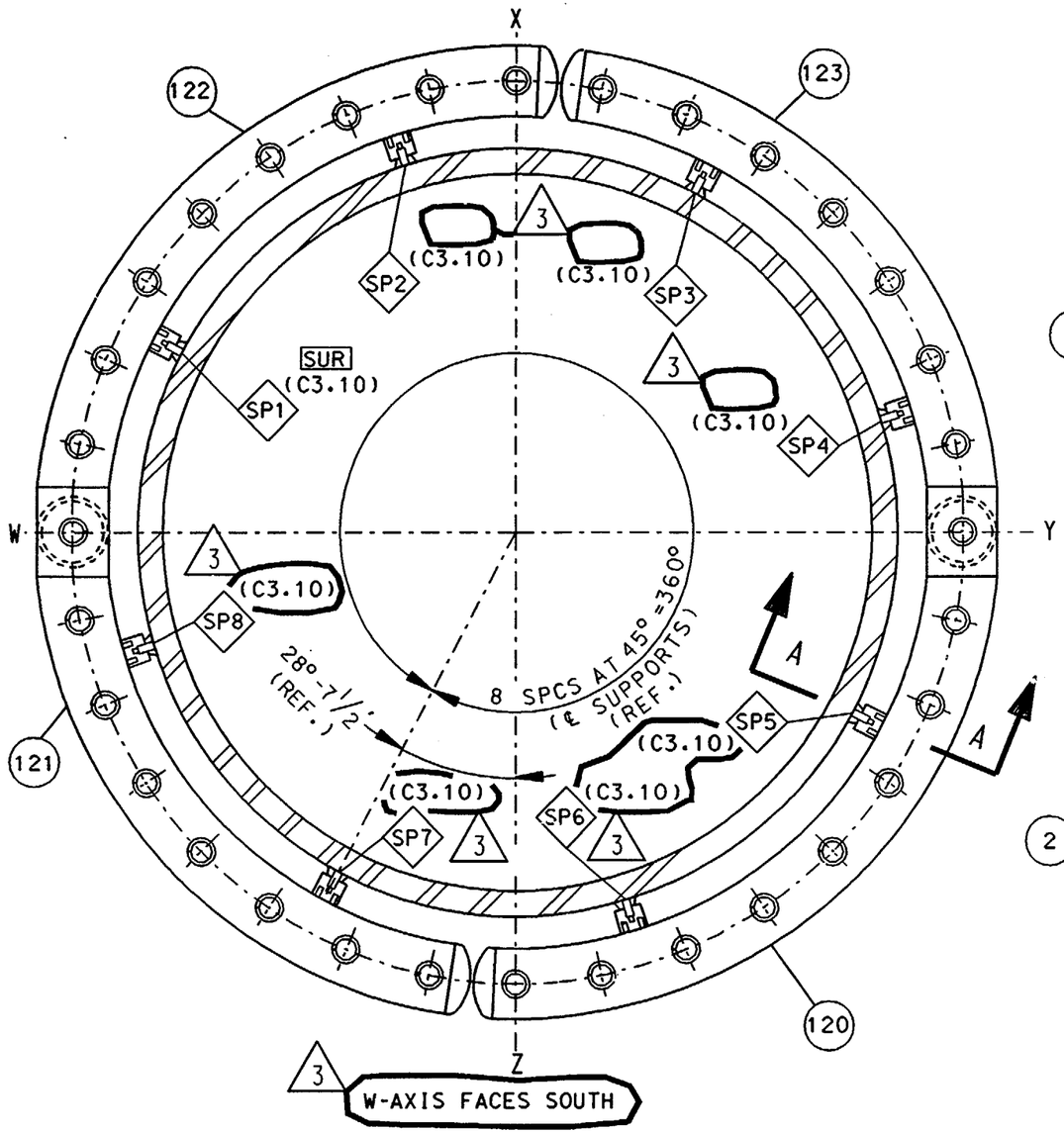

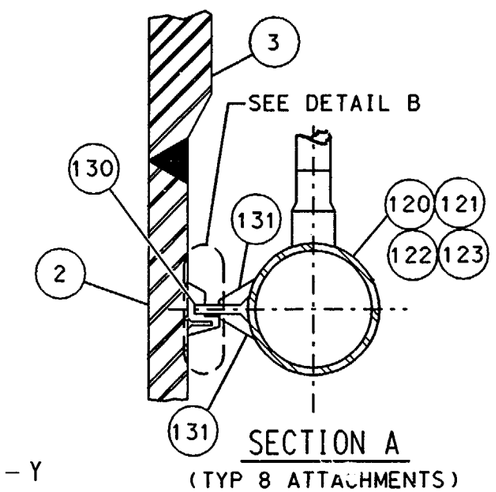

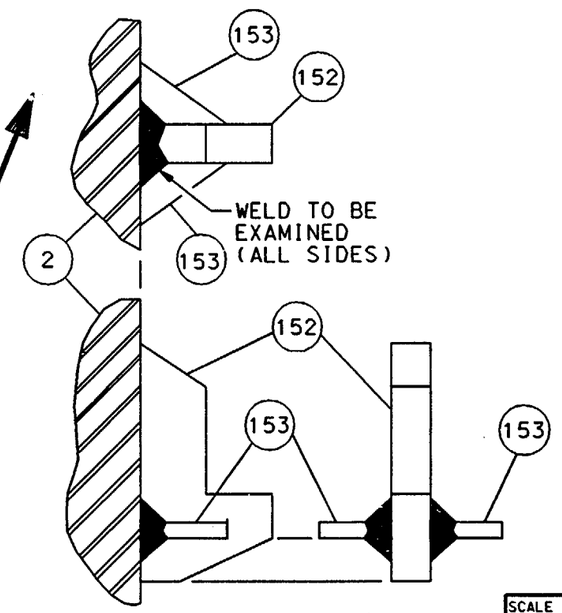

LEGEND:

SUR - SURFACE EXAMINATION

NOTES:

1. THE WELD NUMBER FOR THE INTEGRAL ATTACHMENTS TO THE STEAM GENERATOR SHELL ARE PRECEEDED BY "SP-SG-1-".
2. DELETED
3. THE ATTACHMENT WELD FOR MK 130 TO MK 120/121/123/124 IS EXAMINED AS A PIPING ATTACHMENT UNDER ASME SECTION XI EXAMINATION CATEGORY C-C, ITEM NO. C3.20.

REFERENCE DRAWINGS:

B&W 151923E FEEDWATER INLET CONNECTIONS (TED #7749-M-506-19)

B&W 151924E ASSEMBLY FEEDWATER HEADER AND NOZZLES (TED #7749-M-506-20)

MARK #	DESCRIPTION	MATERIAL
2	SHELL SECTION	SA516 GR70
3	SHELL SECTION	SA516 GR70
120	14 IN. FEEDWATER INLET HEADER	SA106 GRB
121	14 IN. FEEDWATER INLET HEADER	SA106 GRB
122	14 IN. FEEDWATER INLET HEADER	SA106 GRB
123	14 IN. FEEDWATER INLET HEADER	SA106 GRB
130	1 IN. SUPPORT PLATE	SA516 GR70
131	1/2 IN. GUSSET PLATE	SA516 GR70
152	1 IN. HEADER SUPPORT PLATE	SA516 GR70
153	1/2 IN. HEADER GUSSET PLATE	SA516 GR70

REV.	DATE	DESCRIPTION
3	8-21-00	INC. DCN ISI-SK-037-2 PER DDR 00-1766
2	9-30-92	INC. DCN ISI-SK-037-1 FOR DCR 91-0011
1	9-20-90	ISSUED FOR SECOND 10 YEAR INSERVICE INSPECTION INTERVAL

BY	CHK	ENGR	ENGR SUPV	ENG MGR
JOR	SBW	INITIALS ON FILE*	INITIALS ON FILE*	

SCALE N.T.S. | DESIGNED | DRAWN CB | DATE 5-3-89

DAVIS-BESSE NUCLEAR POWER STATION
UNIT NO. 1
THE TOLEDO EDISON COMPANY

STEAM GENERATOR 1-1
MAIN FEEDWATER ATTACHMENT WELDS
CONTAINMENT BUILDING

DRAWING NO.	REV.
ISI-SK-037	3

DB DATE: 08-01-00 DFN=J:/ISI/ISISK037.DGN

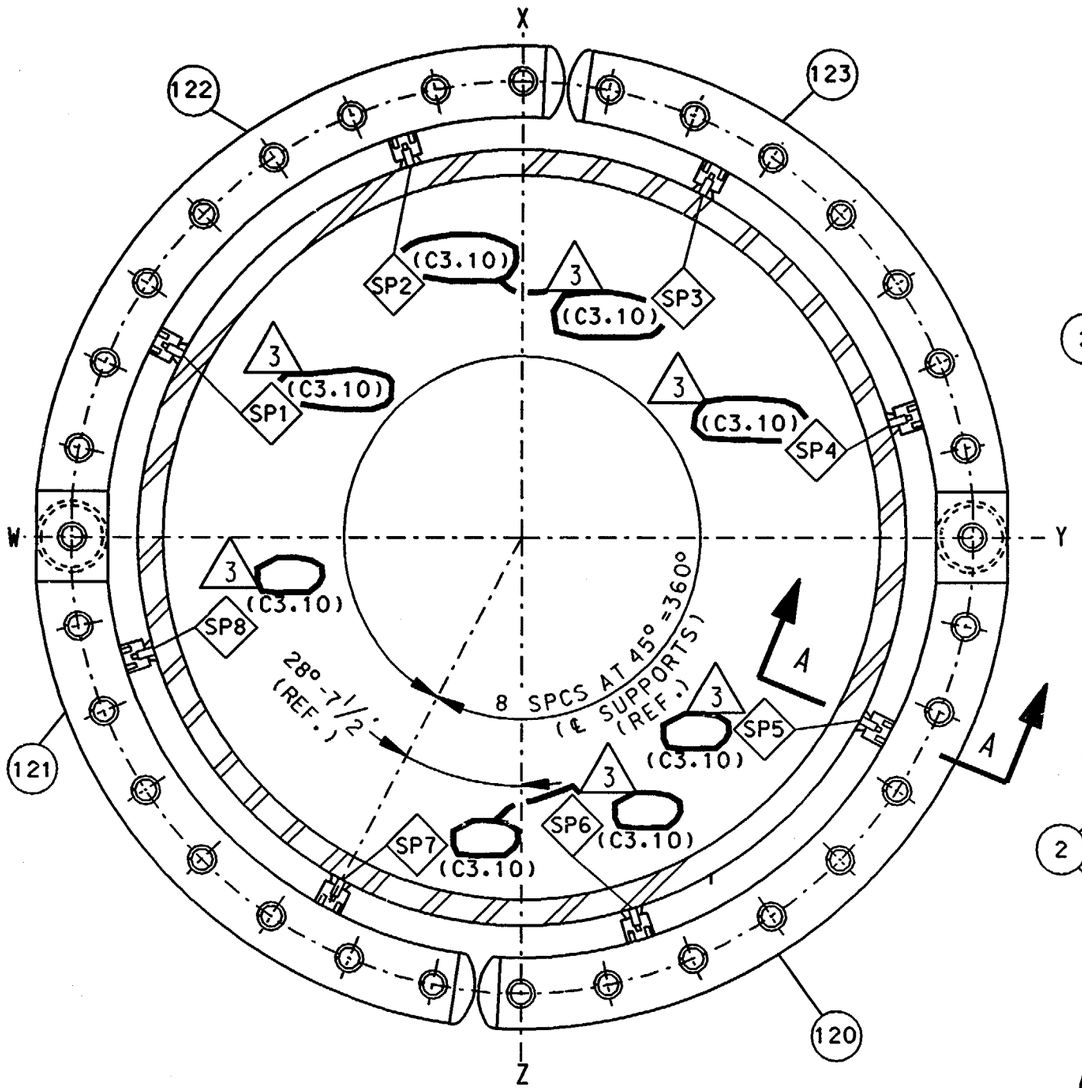

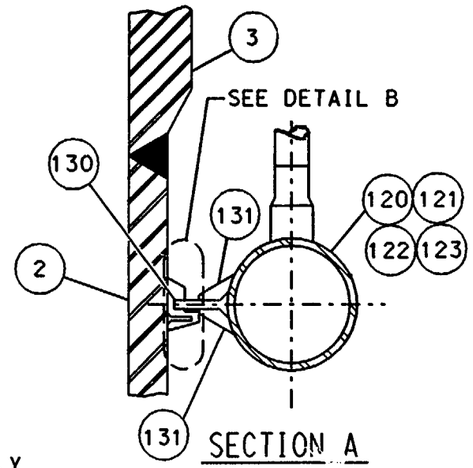

SECTION A
(TYP 8 ATTACHMENTS)

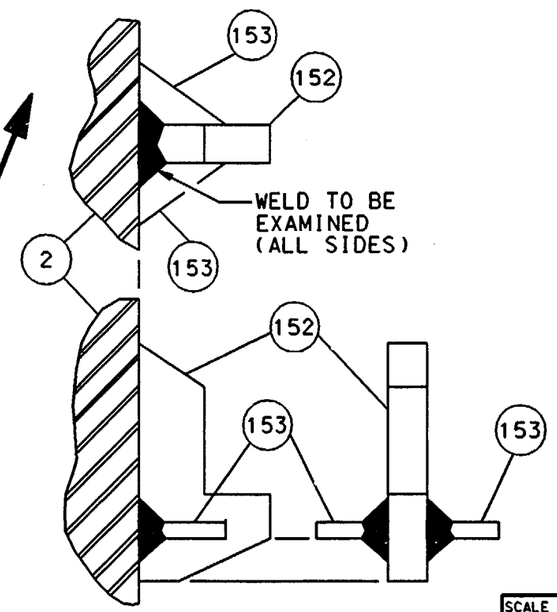

DETAIL B

NOTES:

1. THE WELD NUMBER FOR THE INTEGRAL ATTACHMENTS TO THE STEAM GENERATOR SHELL ARE PRECEEDED BY "SP-SG-2-".
2. DELETED.

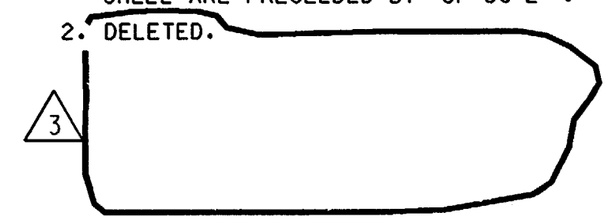

3. THE ATTACHMENT WELD FOR MK 130 TO MK 120/121/123/124 IS EXAMINED AS A PIPING ATTACHMENT UNDER ASME SECTION XI EXAMINATION CATEGORY C-C, ITEM NO. C3.20.

REFERENCE DRAWINGS:

B&W 151923E FEEDWATER INLET CONNECTIONS (TED #7749-M-506-19)

B&W 151924E ASSEMBLY FEEDWATER HEADER AND NOZZLES (TED #7749-M-506-20)

MARK #	DESCRIPTION	MATERIAL
2	SHELL SECTION	SA516 GR70
3	SHELL SECTION	SA516 GR.70
120	14 IN. FEEDWATER INLET HEADER	SA106 GRB
121	14 IN. FEEDWATER INLET HEADER	SA106 GRB
122	14 IN. FEEDWATER INLET HEADER	SA106 GRB
123	14 IN. FEEDWATER INLET HEADER	SA106 GRB
130	1 IN. SUPPORT PLATE	SA516 GR.70
131	1/2 IN. GUSSET PLATE	SA516 GR.70
152	1 IN. HEADER SUPPORT PLATE	SA516 GR.70
153	1/2 IN. HEADER GUSSET PLATE	SA516 GR.70

REV.	DATE	DESCRIPTION
3	8-2-00	INC. DCN ISI-SK-038-2 PER DDR 00-1766
2	9-30-92	INC. DCN ISI-SK-038-1 FOR DCR 91-0011
1	9-20-90	ISSUED FOR SECOND 10 YEAR INSERVICE INSPECTION INTERVAL

JOR	CHK	ENGR	ENGR SUPV	ENG MGR
SBW	"INITIALS ON FILE"	"INITIALS ON FILE"		

SCALE N.T.S.	DESIGNED	DRAWN CB	DATE 5-3-89

DAVIS-BESSE NUCLEAR POWER STATION
UNIT NO. 1
THE TOLEDO EDISON COMPANY

0

STEAM GENERATOR 1-2
MAIN FEEDWATER ATTACHMENT WELDS
CONTAINMENT BUILDING

DRAWING NO.	REV.
ISI-SK-038	3

DB DATE: 08-01-00 DFN=J:/ISI/ISISK038.DGN

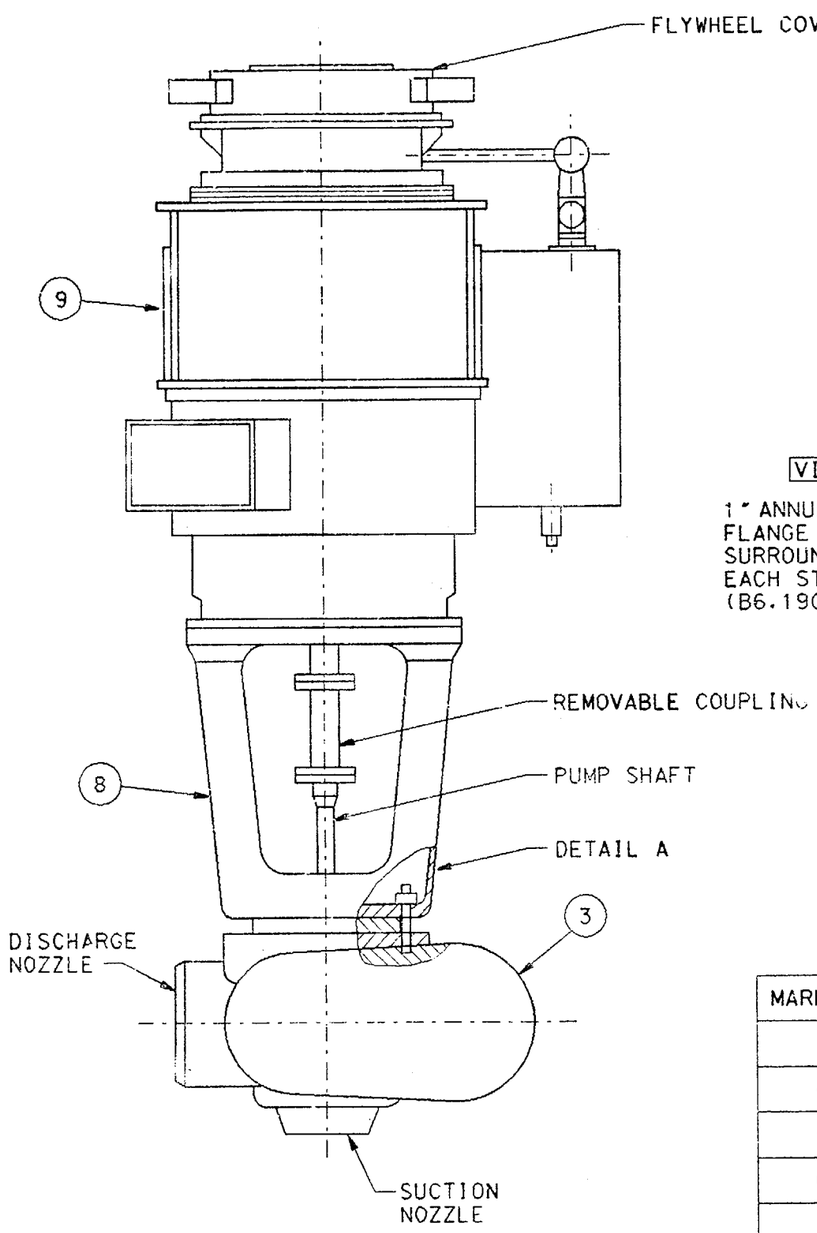

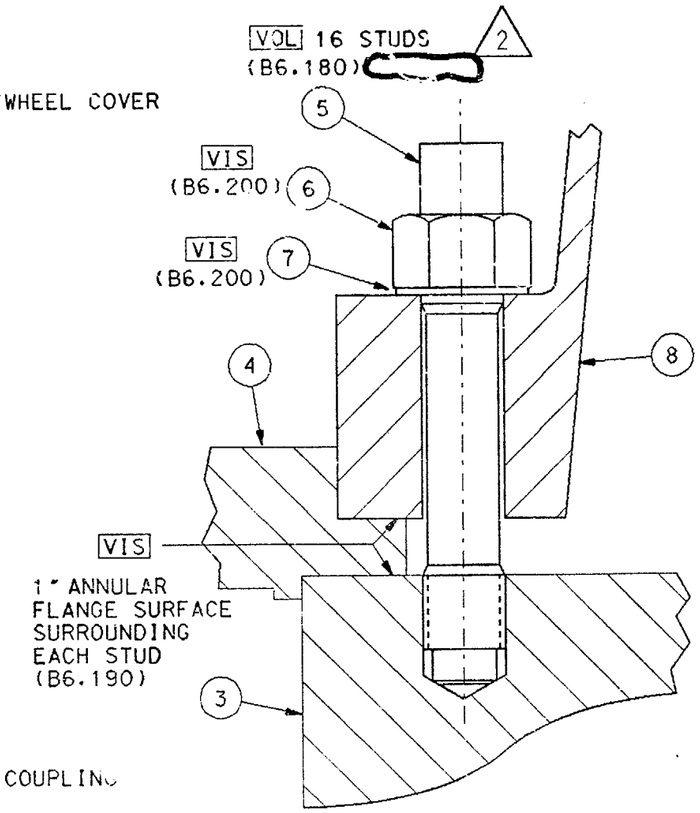

DETAIL A
COVER TO CASE ASSEMBLY

LEGEND:

VOL - VOLUMETRIC EXAMINATION
VIS - VISUAL (VT-1) EXAMINATION

NOTES:

1. THIS DRAWING IS APPLICABLE FOR THE FOLLOWING REACTOR COOLING PUMPS:

PUMP NO.	EQUIPMENT NO.	BJ SERIAL NO.
1-1-1	P36-1	701-N-0243
1-1-2	P36-2	701-N-0241
1-2-1	P36-3	701-N-0240
1-2-2	P36-4	701-N-0242

2. THE MARK NUMBERS SHOWN ARE FOR ISI ONLY.

REFERENCE DRAWINGS:

1. B-J 1F-8737 REACTOR COOLANT PUMP INTERNALS (TED #7749-M-508-74)
2. B-J 2F-1424 OUTLINE & PUMP ORIENTATION (TED #7749-M-508-10)
3. B-J L000391 ROTATING ELEMENT SECTION (TED #12501-M508Q-14)
4. B-J MATERIALS LIST (TED #7749-M-508-11)

MARK NO.	DESCRIPTION	MATERIAL
3	PUMP CASE ASSEMBLY	A351 CF8M
4	PUMP COVER	A351 CF8M
5	4 3/4" DIA. STUD (16)	A540 GRB23 CL4
6	4 3/4" DIA. NUT (16)	A194 GR7
7	WASHER (16)	N/A
8	PUMP MOTOR SUPPORT	N/A
9	PUMP MOTOR ASSEMBLY	N/A
	PUMP SHAFT	

REV.	DATE	DESCRIPTION	BY	CHK	ENGR	ENGR SUPV	ENG MGR
2	7-2-93	INC. DCN ISI-SK-040-1 FOR RFA 92-0689	JFS	JJS	—	—	—
1	9/20/90	ISSUED FOR SECOND 10 YEAR INSERVICE INSPECTION INTERVAL		INITIALS ON FILE			

SCALE N.T.S. | DESIGNED | DRAWN WME | DATE 5-3-89

DAVIS-BESSE NUCLEAR POWER STATION
UNIT NO. 1
THE TOLEDO EDISON COMPANY

REACTOR COOLANT PUMP OUTLINE AND BOLTING DETAILS

DRAWING NO. ISI-SK-040 | REV. 2

DB: 01-04-93 DFN=DS1:[55,7]ISISK040.DGN

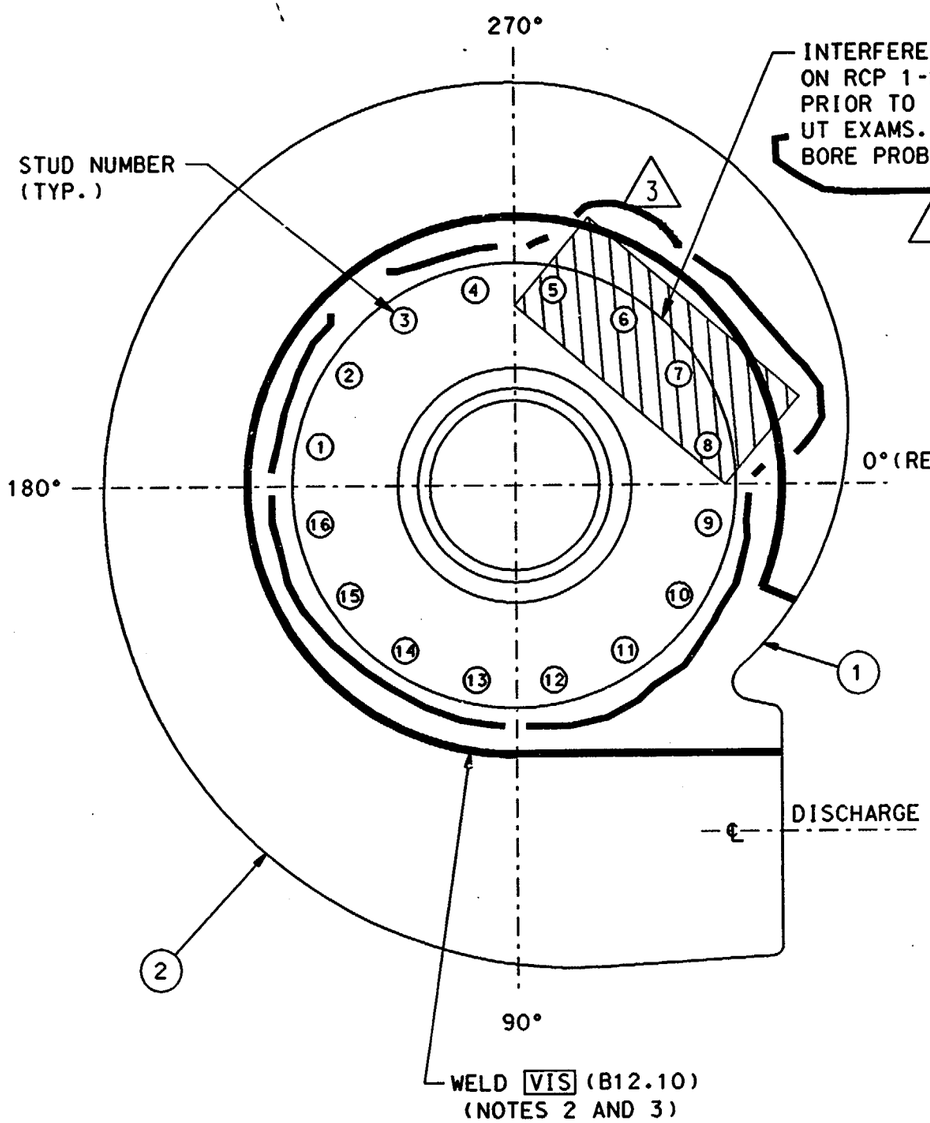

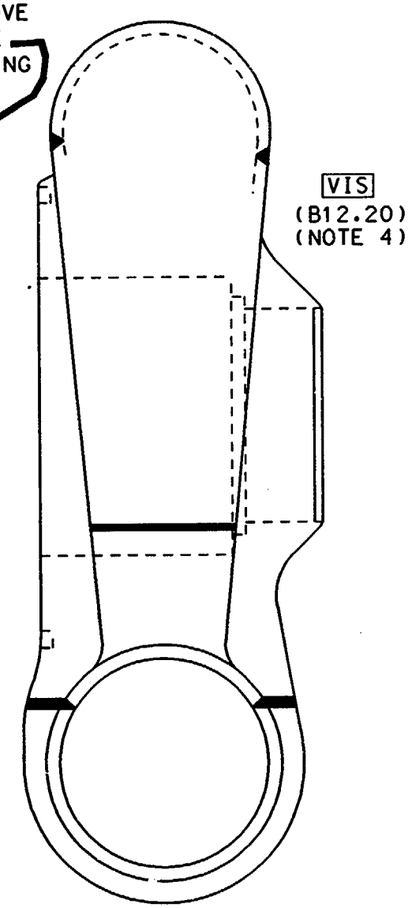

LEGEND:

VIS - VISUAL (VT-3) EXAMINATION

NOTES:

1. THIS DRAWING IS APPLICABLE FOR REACTOR COOLANT PUMPS 1-1-1 (P36-1) AND 1-2-2 (P36-4).
2. THE PUMP CASE WELD IS CONTINUOUS AND CONSISTS OF THE HORIZONTAL UPPER SCROLL WELD, THE VERTICAL TORUS WELD AND THE HORIZONTAL LOWER SCROLL WELD.
3. A VISUAL VT-3 EXAMINATION IS REQUIRED WHEN THE PUMP CASE IS OPENED FOR MAINTENANCE. SEE CODE CASE N-481.
4. A VISUAL VT-3 EXAMINATION OF THE ACCESSABLE INTERNAL SURFACES IS REQUIRED IF THE PUMP CASES IS OPENED FOR MAINTENANCE.
5. THE MARK NUMBERS SHOWN ARE FOR ISI ONLY.

REFERENCE DRAWINGS:

B-J 2B-12865 AS-BUILT DIMENSIONS (TED #7749-M-508-43)

MARK NO.	DESCRIPTION
1	PUMP CASE HUB
2	PUMP CASE SCROLL

REV.	DATE	DESCRIPTION
2	1/08/93	INC DCN ISI-SK-041-2 FOR RFA 92-0689
3	10/6/97	INC DCN ISI-SK-041-3 PER DDR 97-0187
0	9/12/89	ISSUED FOR SECOND 10 YEAR INSERVICE INSPECTION INTERVAL

BY	CHK	ENGR	ENGR SUPV	ENG MGR
SBW	DVK	—	—	—
	"INIT ALS ON FILE"		"INIT ALS ON FILE"	

SCALE N.T.S. | DESIGNED | DRAWN WME | DATE 5-3-89

DAVIS-BESSE NUCLEAR POWER STATION
UNIT NO. 1
THE TOLEDO EDISON COMPANY

Q

RCP 1-1-1 AND RCP 1-2-2
PUMP CASE ASSEMBLY

DRAWING NO.	REV.
ISI-SK-041	3

DB: 10-01-97 DFN=I:/ISI/ISISK041.DGN

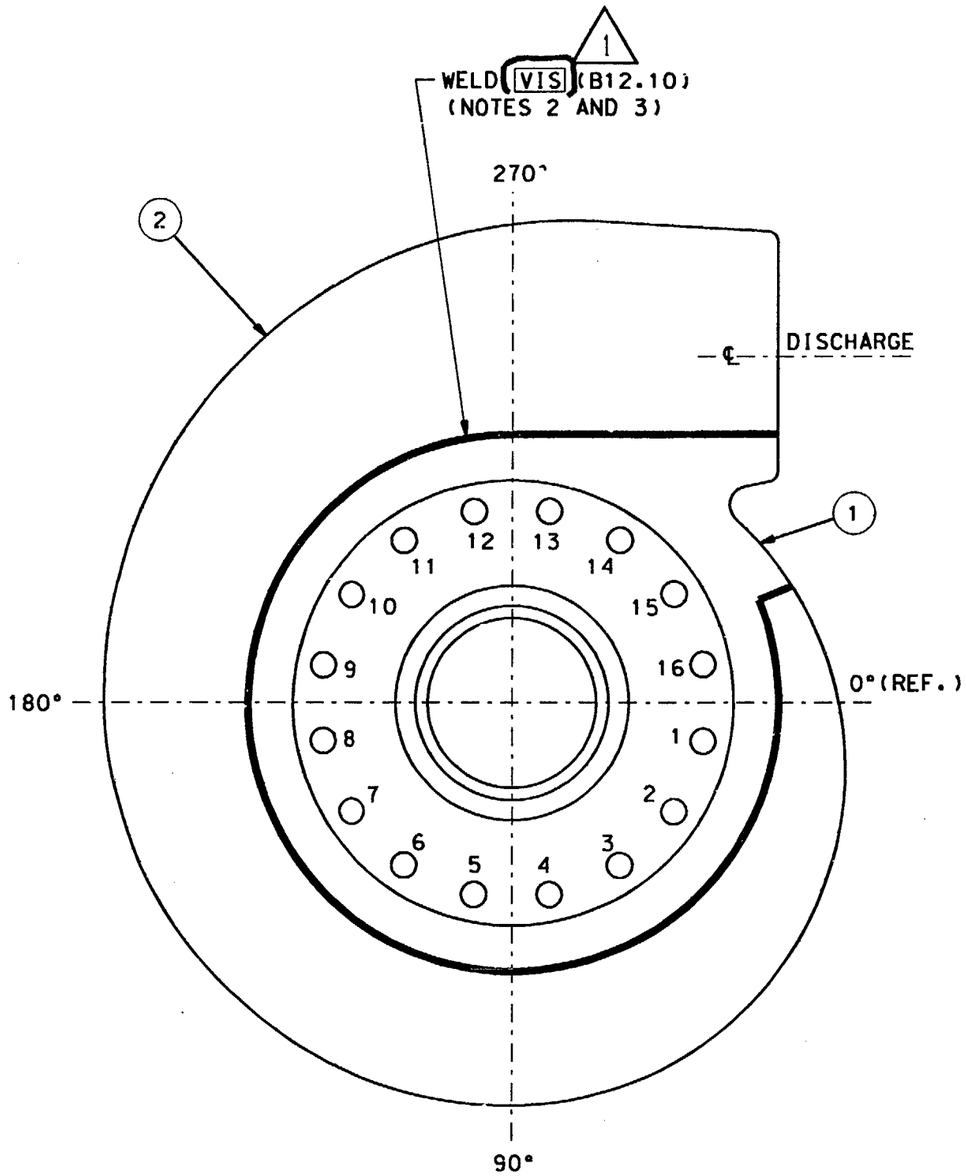

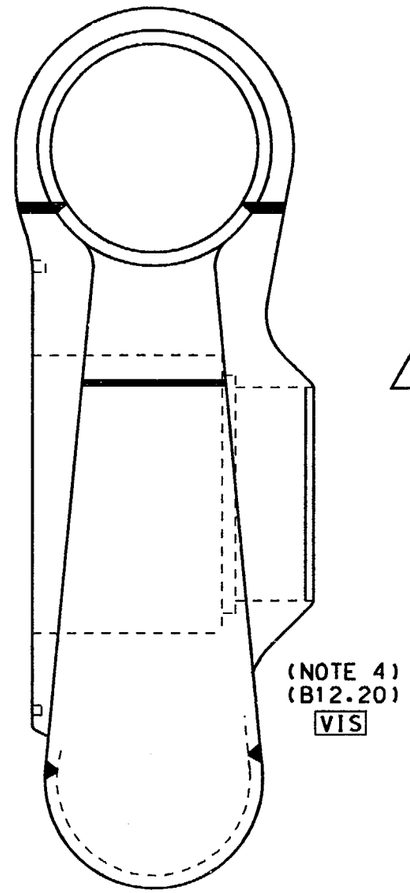

LEGEND:

1

VIS - VISUAL (VT-3) EXAMINATION

NOTES:

1. THIS DRAWING IS APPLICABLE FOR REACTOR COOLANT PUMPS 1-1-2 (P36-2) AND 1-2-1 (P36-3).
2. THE PUMP CASE WELD IS CONTINUOUS AND CONSISTS OF THE HORIZONTAL UPPER SCROLL WELD, THE VERTICAL TORUS WELD AND THE HORIZONTAL LOWER SCROLL WELD.
3. A VISUAL VT-3 EXAMINATION IS REQUIRED WHEN THE PUMP CASE IS OPENED FOR MAINTENANCE. SEE CODE CASE N-481. (1)
4. A VISUAL VT-3 EXAMINATION OF THE ACCESSABLE INTERNAL SURFACES IS REQUIRED IF THE PUMP CASE IS OPENED FOR MAINTENANCE.
5. THE MARK NUMBERS SHOWN ARE FOR ISI ONLY.

MARK NO.	DESCRIPTION
1	PUMP CASE HUB
2	PUMP CASE SCROLL

SCALE N.T.S.	DESIGNED	DRAWN WME	DATE 5-3-89

DAVIS-BESSE NUCLEAR POWER STATION
UNIT NO. 1
THE TOLEDO EDISON COMPANY

Q

RCP 1-1-2 AND RCP 1-2-1
PUMP CASE ASSEMBLY

DRAWING NO.	REV.
ISI-SK-042	1

DB:08-31-92 DFN=F:/ISI/ISISK042.DGN

REV.	DATE	DESCRIPTION
1	7/24/92	INC DCN ISI-SK-042-1 FOR DCR 91-0011
0	9/12/89	ISSUED FOR SECOND 10 YEAR INSERVICE INSPECTION INTERVAL

BY	CHK	ENGR	ENGR SUPV	ENG MGR
JOR		JJS		

INITIALS ON FILE

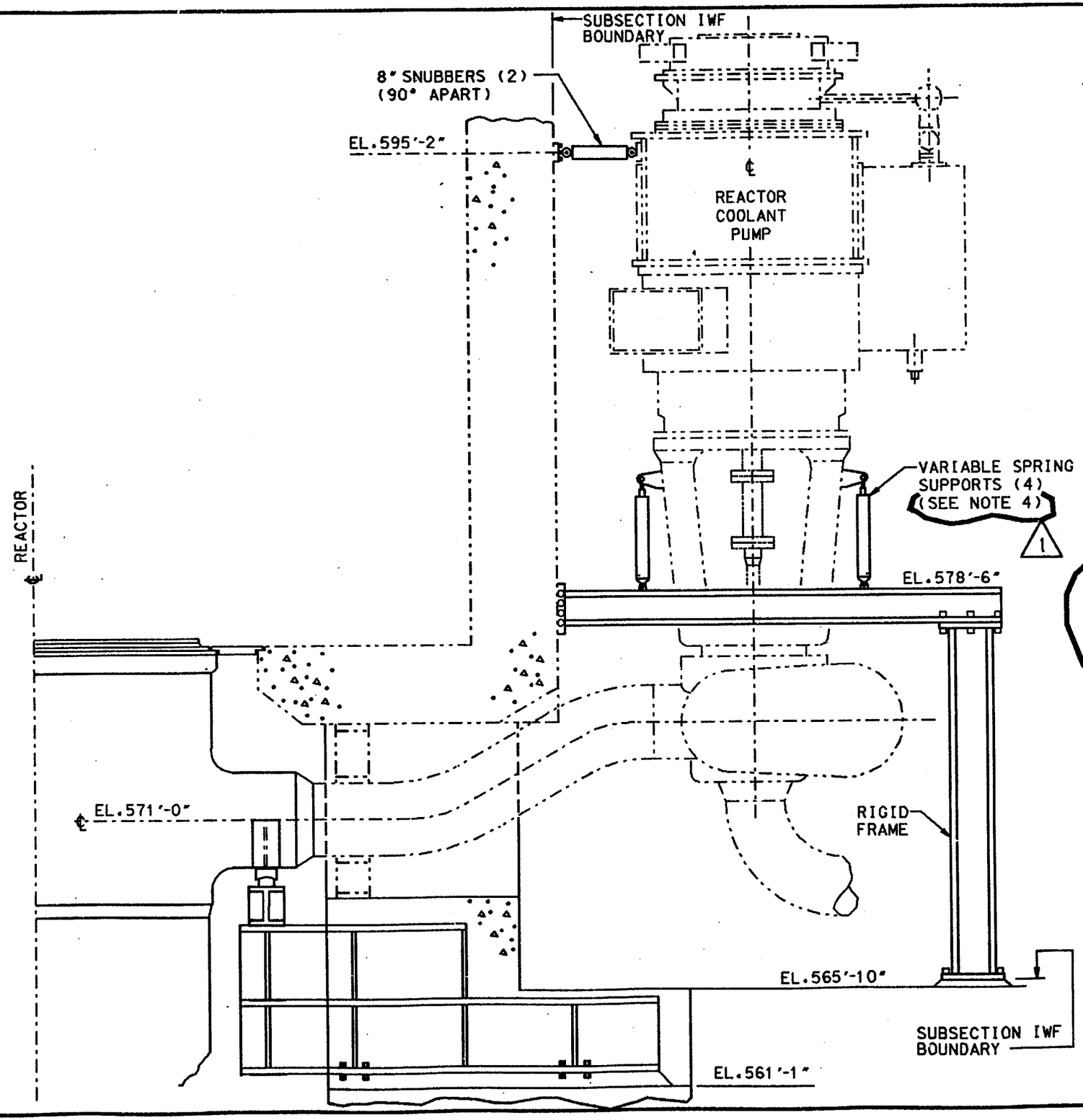

NOTES:

1. THE CONFIGURATION SHOWN IS TYPICAL FOR EACH OF THE FOUR REACTOR COOLANT PUMPS:

PUMP NO.	EQUIPMENT NO.	SNUBBER NO.	DIRECTION
1-1-1	P36-1	1	EAST/WEST
		2	NORTH/SOUTH
1-1-2	P36-2	3	EAST/WEST
		4	NORTH/SOUTH
1-2-1	P36-3	5	EAST/WEST
		6	NORTH/SOUTH
1-2-2	P36-4	7	EAST/WEST
		8	NORTH/SOUTH

2. THE SUPPORTS FOR EACH REACTOR COOLANT PUMP CONSIST OF THE RIGID FRAME, FOUR VARIABLE SPRING SUPPORTS AND TWO HYDRAULIC SNUBBERS.

3. A VT-3 EXAMINATION SHALL BE PERFORMED ON THE SUPPORTS FOR ONE OF THE FOUR REACTOR COOLANT PUMPS. THE VT-3 EXAMINATION SHALL BE PERFORMED FROM EACH BOLTED OR WELDED CONNECTION TO THE BUILDING STRUCTURE (EMBED) TO THE BOLTED (PINNED) CONNECTIONS TO THE PUMP MOTOR AND PUMP MOTOR SUPPORTS. THE PUMP MOTOR AND PUMP MOTOR SUPPORTS ARE DEFINED AS INTERVENING ELEMENTS.

4. SPRING SUPPORT PIN-TO-PIN DIMENSIONS:
COLD - 45⅝" ± 9/16" OR THE SPRING NEED ONLY BE IN THE WORKING RANGE IF THE HOT PIN-TO-PIN IS VERIFIED ACCEPTABLE.
HOT - 46⅛" ± ¼".
REFERENCE CALC. C-CSS-64.03-011.
1

REFERENCE DRAWINGS:

C-182 CONTAINMENT INTERNAL STRUCTURES COOLANT PUMP STEEL SUPPORT DETAILS

C-183 CONTAINMENT INTERNAL STRUCTURES COOLANT PUMP RESTRAINTS.

B&W 134619C PUMP VARIABLE SPRING SUPPORTS (TED #7749-M-503-24)

SCALE N.T.S.	DESIGNED	DRAWN CB	DATE 5-26-89

DAVIS-BESSE NUCLEAR POWER STATION
UNIT NO. 1
THE TOLEDO EDISON COMPANY

Q

REACTOR COOLANT PUMP SUPPORTS

DRAWING NO.	REV.
ISI-SK-043	1

REV.	DATE	DESCRIPTION
1	6-11-93	INC. DCN ISI-SK-043-1 PER RFA 93-0126
0	9-12-89	ISSUED FOR SECOND 10 YEAR INSERVICE INSPECTION INTERVAL

SBW	JBG	JJS	-	-
CB	PJC	JRB	LLC	EA
BY	CHK	ENGR	ENGR SUPV	ENG MGR

DB 05-26-93

DFN=t/USR3/ISI/ISISK043.DGN

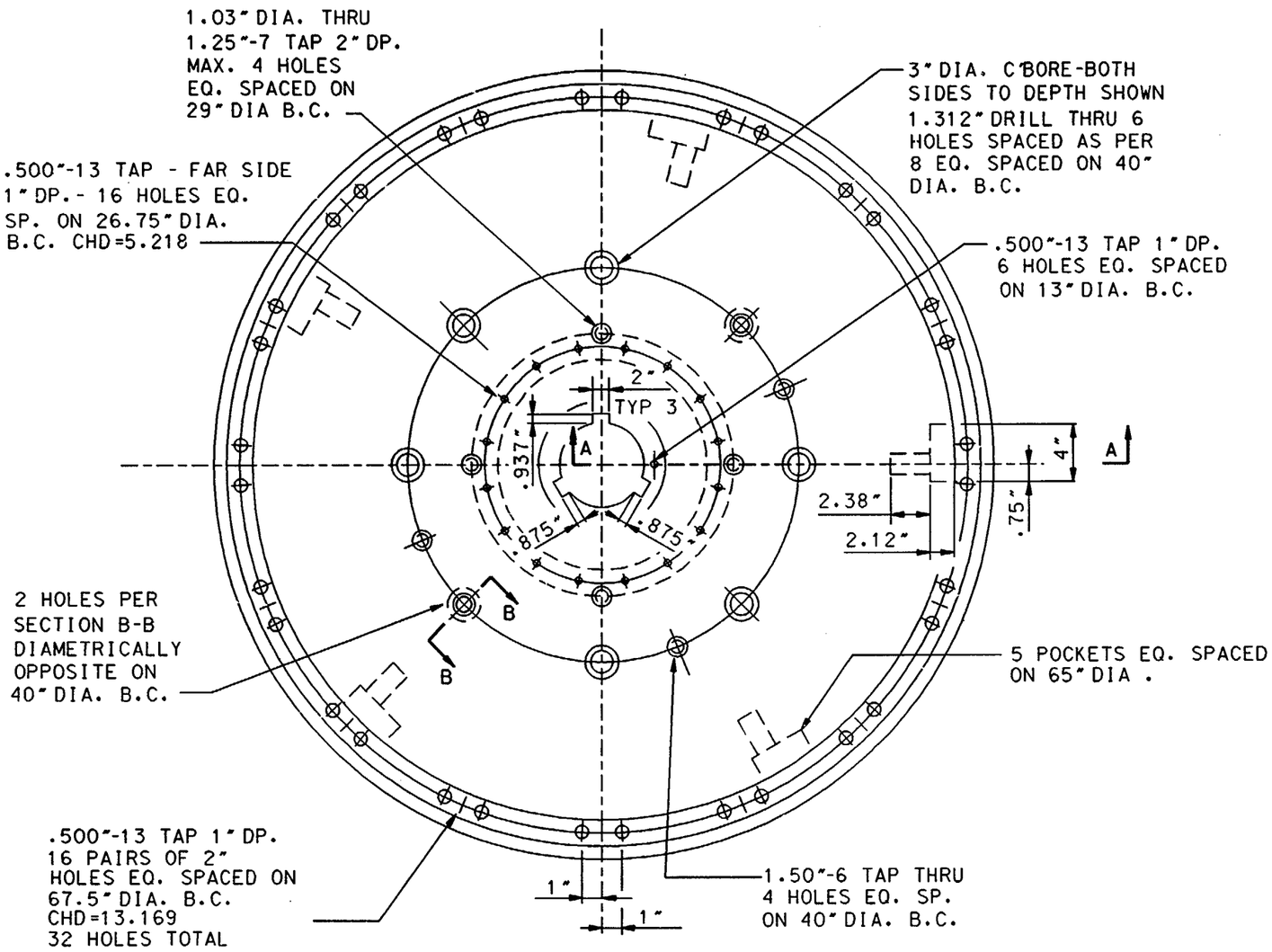

ORIGINAL DESIGN

NOTES:

1. DELETED.
2. DELETED.
3. ALL EXAMINATIONS THAT ARE PERFORMED ON THE PUMP FLYWHEELS ARE AUGMENTED.
4. SPARE REACTOR COOLANT PUMPS WITH FLYWHEELS ARE PERIODICALLY INTERCHANGED WITH INSTALLED REACTOR COOLANT PUMPS. THE LOCATION OF THE FLYWHEELS ARE IDENTIFIED IN THE ISI DATABASE.
5. FOR NEW DESIGN OF REACTOR COOLANT PUMP FLYWHEEL DETAIL SEE DWG. ISI-SK-044 SH.3.
6. EXAMINATION IS PERFORMED IN ACCORDANCE WITH DAVIS-BESSE TECHNICAL SPECIFICATION 4.4.10.1.

REFERENCE DRAWINGS:

1. WESTINGHOUSE ELECTRIC CORP. DRAWING 8334D83

SCALE N.T.S.	DESIGNED	DRAWN CB	DATE 5-3-89

DAVIS-BESSE NUCLEAR POWER STATION
UNIT NO. 1
THE TOLEDO EDISON COMPANY

0

REACTOR COOLANT PUMP
FLYWHEEL DETAIL

DRAWING NO.	REV.
ISI-SK-044 SH.1	3

DB: 08-01-00 DFN=J:/ISI/ISISK044.DGN

REV.	DATE	DESCRIPTION
2	07-19-93	INC DCN ISI-SK-044-2 FOR RFA 93-0254
3	8-21-00	INC DCN ISI-SK-044-3 PER DDR 00-1766
0	9/12/89	ISSUED FOR SECOND 10 YEAR INSERVICE INSPECTION INTERVAL

BY	CHK	ENGR	ENGR SUPV	ENG MGR
JOR	SBW	"INITIALS ON FILE"	"INITIALS ON FILE"	—

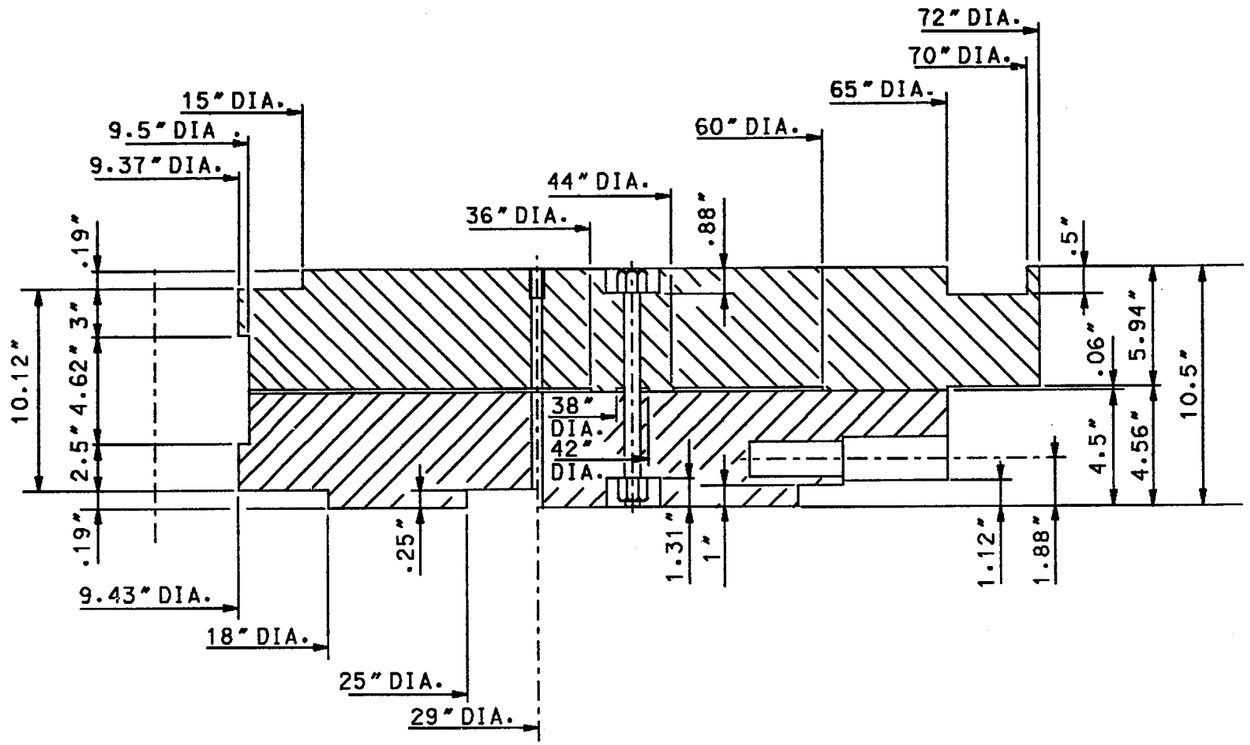

SECTION A-A

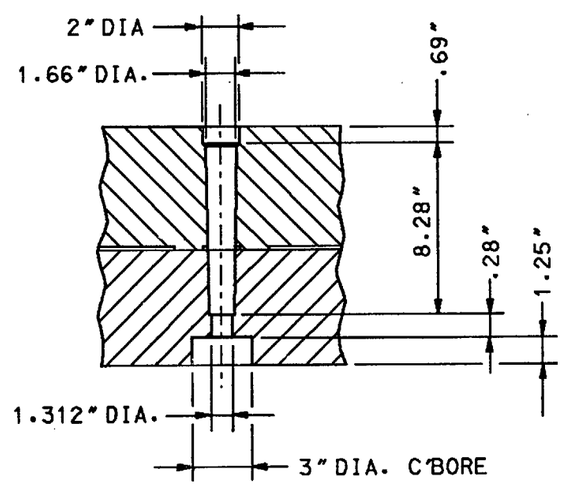

SECTION B-B

NOTES:

1. FOR EXAMINATION REQUIREMENTS, NOTES AND REFERENCES, SEE SHEET 1 OF THIS DRAWING.

REV.	DATE	DESCRIPTION	BY	CHK	ENGR	ENGR SUPV	ENG MGR
0	9/20/89	ISSUED FOR SECOND 10 YEAR INSERVICE INSPECTION INTERVAL	CB	PJC	JRB	LLC/EVC	EA

SCALE N.T.S.	DESIGNED	DRAWN CB	DATE 5-3-89

DAVIS-BESSE NUCLEAR POWER STATION
UNIT NO. 1
THE TOLEDO EDISON COMPANY

Q

REACTOR COOLANT PUMP
FLYWHEEL DETAIL

DRAWING NO.	REV.
ISI-SK-044 SH.2 OF 2	0

DFN=QS1:[55,7]ISISK044.DGN

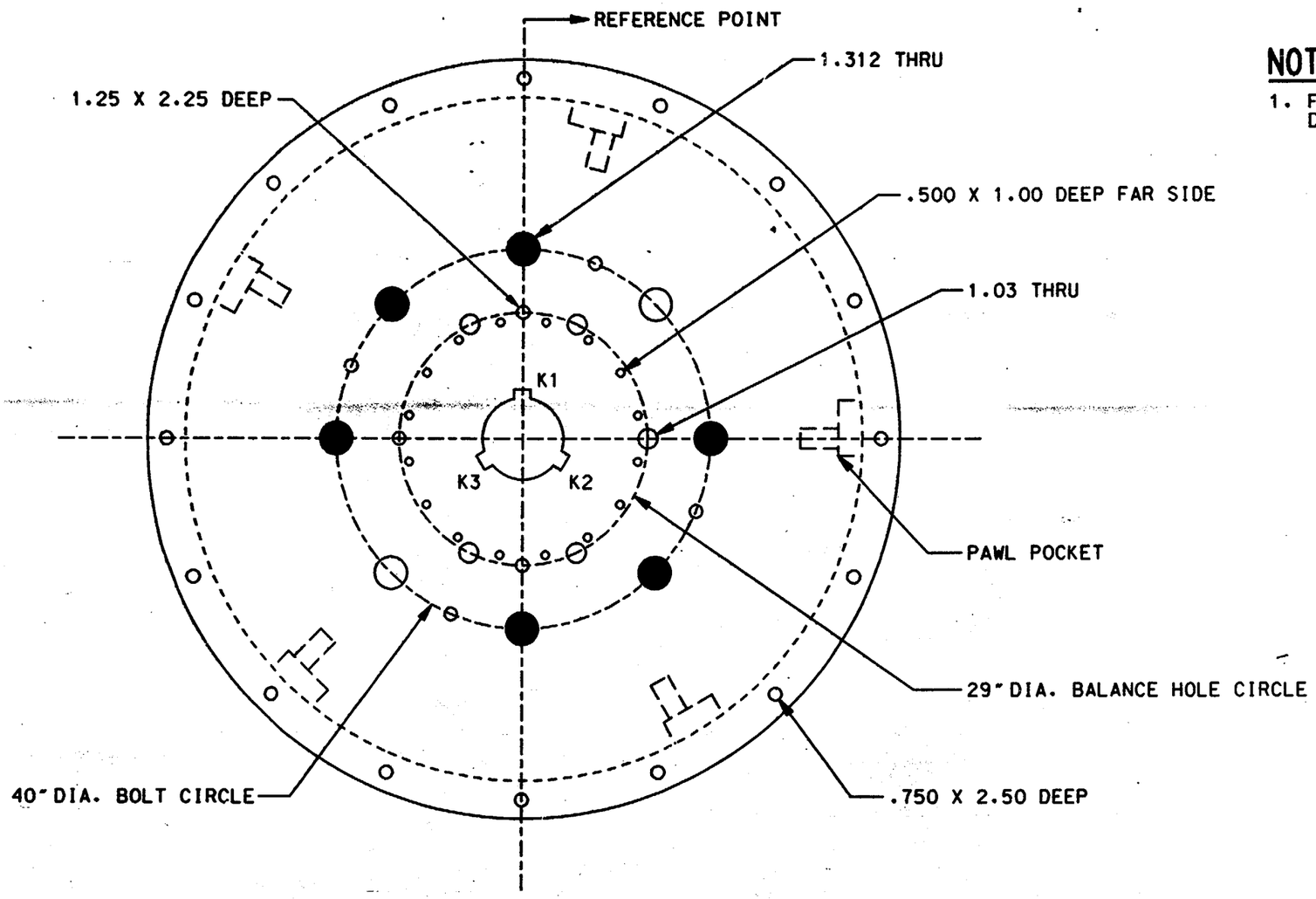

NOTES:

1. FOR NOTES AND REFERENCE DRAWINGS SEE DWG. ISI-SK-044 SH.1.

NEW DESIGN

REV.	DATE	DESCRIPTION	BY	CHK	ENGR	ENGR SUPV	ENG MGR
0	[illegible]	INC DCN ISI-SK-044-2 FOR RFA 93-0254	JFS	SBW	JJS	–	–

SCALE N.T.S.	DESIGNED	DRAWN JFS	DATE 07-01-93

DAVIS-BESSE NUCLEAR POWER STATION
UNIT NO. 1
THE TOLEDO EDISON COMPANY

REACTOR COOLANT PUMP
FLYWHEEL DETAIL

DRAWING NO.	REV.
ISI-SK-044 SH.3	0

DB: 07-13-93 DFN=F:/ISI/ISISK044.DGN

I CERTIFY THAT THE IMAGE CONTAINED ON THIS FRAME WAS MADE IN

DECAY HEAT NOZZLE	WELD ID	DESCRIPTION	EXAMINATION	CLASS 2 TUBE SIDE MATERIALS	CLASS 3 SHELL SIDE MATERIALS
INLET	C	REINFORCING PLATE TO NOZZLE WELD	SURFACE	SA240 TP304 TO SA312 TP304	SA285-C TO SA53-B
	I	REINFORCING PLATE TO SHELL WELD	SURFACE	SA240 TP304	SA285-C
OUTLET	E	REINFORCING PLATE TO NOZZLE WELD	SURFACE	SA240 TP304 TO SA312 TP304	SA285-C TO SA53-B
	J	REINFORCING PLATE TO SHELL WELD	SURFACE	SA240 TP304	SA285-C

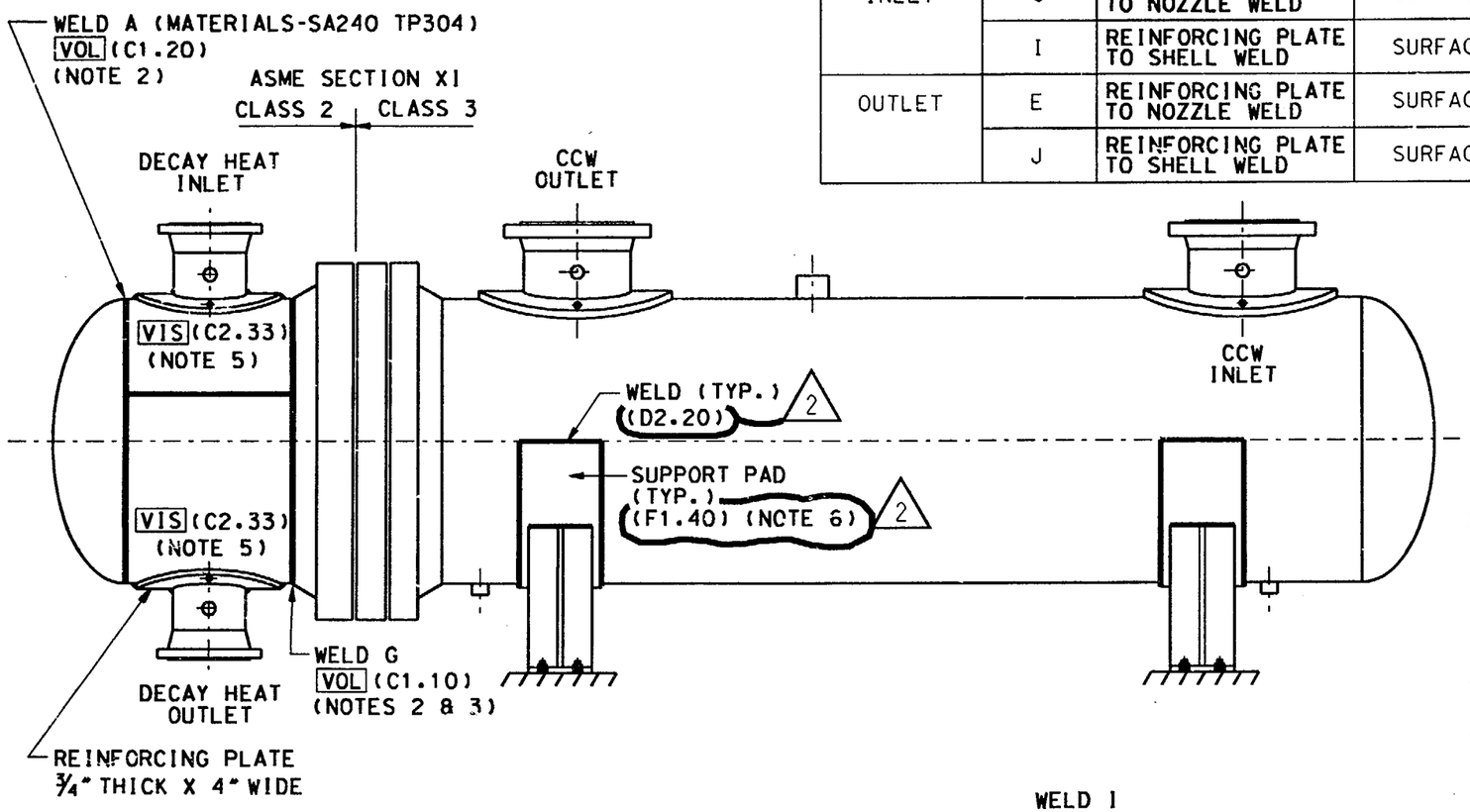

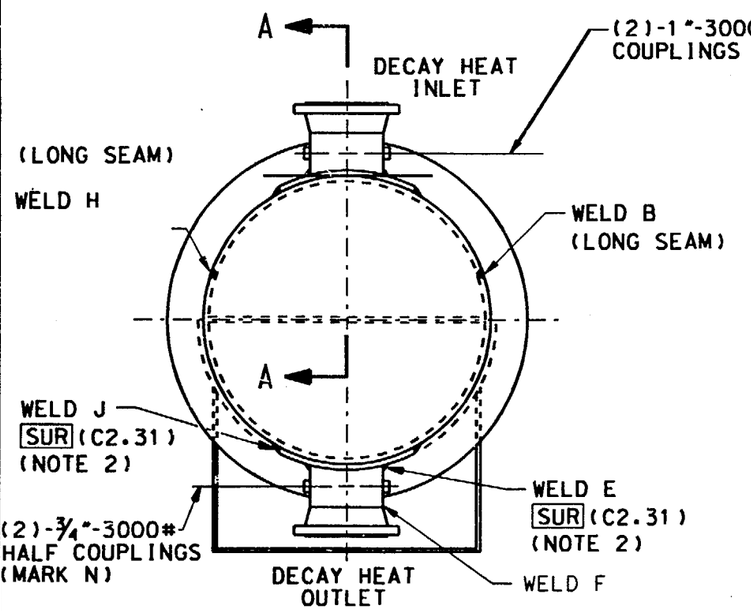

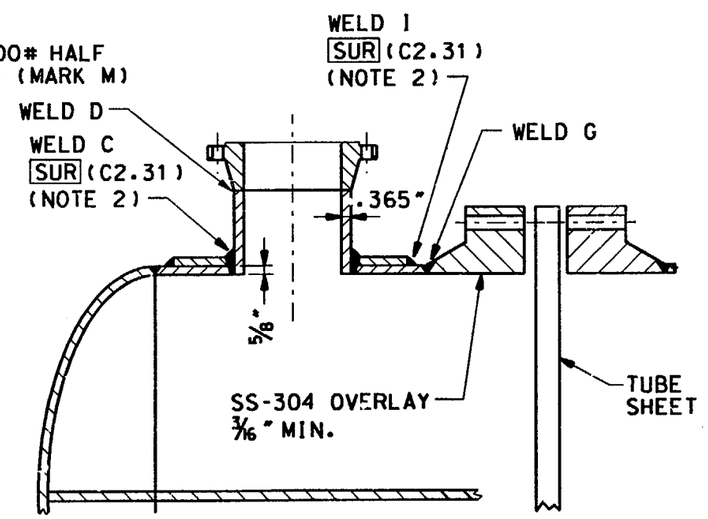

SECTION A-A

LEGEND:

VOL - VOLUMETRIC EXAMINATION
SUR - SURFACE EXAMINATION
VIS - VISUAL (VT-2) EXAMINATION

NOTES:

1. THIS DRAWING IS APPLICABLE TO DECAY HEAT COOLERS 1-1 (E27-1) AND 1-2 (E27-2).
2. UNLESS OTHERWISE SPECIFIED, ALL EXAMINATIONS ARE PERFORMED ON THE CLASS 2 SIDE OF DECAY HEAT COOLER 1-1 (E27-1).
3. THE ULTRASONIC EXAMINATION OF WELD G IS PERFORMED FROM ONE SIDE ONLY PER RELIEF REQUEST RR B1.
4. SECTION A-A IS TYPICAL FOR BOTH THE INLET AND OUTLET DECAY HEAT NOZZLES.
5. A VT-2 EXAMINATION OF THE TWO TELLTALE HOLES IN THE REINFORCING PLATE OF EACH NOZZLE IS REQUIRED DURING THE SYSTEM FUNCTIONAL TEST.
6. A VT-3 EXAMINATION SHALL BE PERFORMED ON THE SUPPORTS FOR DECAY HEAT COOLER 1-1 (E27-1). THE VT-3 EXAMINATION SHALL BE PERFORMED FROM EACH BOLTED CONNECTION TO THE BUILDING STRUCTURE TO THE SUPPORT PAD ATTACHMENT WELD TO THE SHELL.

REFERENCE DRAWINGS:

ATLAS INDUSTRIAL MFG. CO. D2552-6
(TED #7749-M-517-8)

SCALE N.T.S.	DESIGNED	DRAWN WME	DATE 5-3-89

DAVIS-BESSE NUCLEAR POWER STATION
UNIT NO. 1
THE TOLEDO EDISON COMPANY

Q

DECAY HEAT COOLERS 1-1 AND 1-2
OUTLINE AND SUPPORTS

DRAWING NO.	REV.
ISI-SK-050	2

REV.	DATE	DESCRIPTION
2	9/30/92	INC. DCN ISI-SK-050-1 FOR DCR 91-0011
1	9-20-90	ISSUED FOR SECOND 10 YEAR INSERVICE INSPECTION INTERVAL

BY	CHK	ENGR	ENGR SUPV	ENG MGR
JFS			"INITIALS ON FILE"	

DB DATE: 08-29-92 DEN=OS1:[55.7]ISISK050.DGN

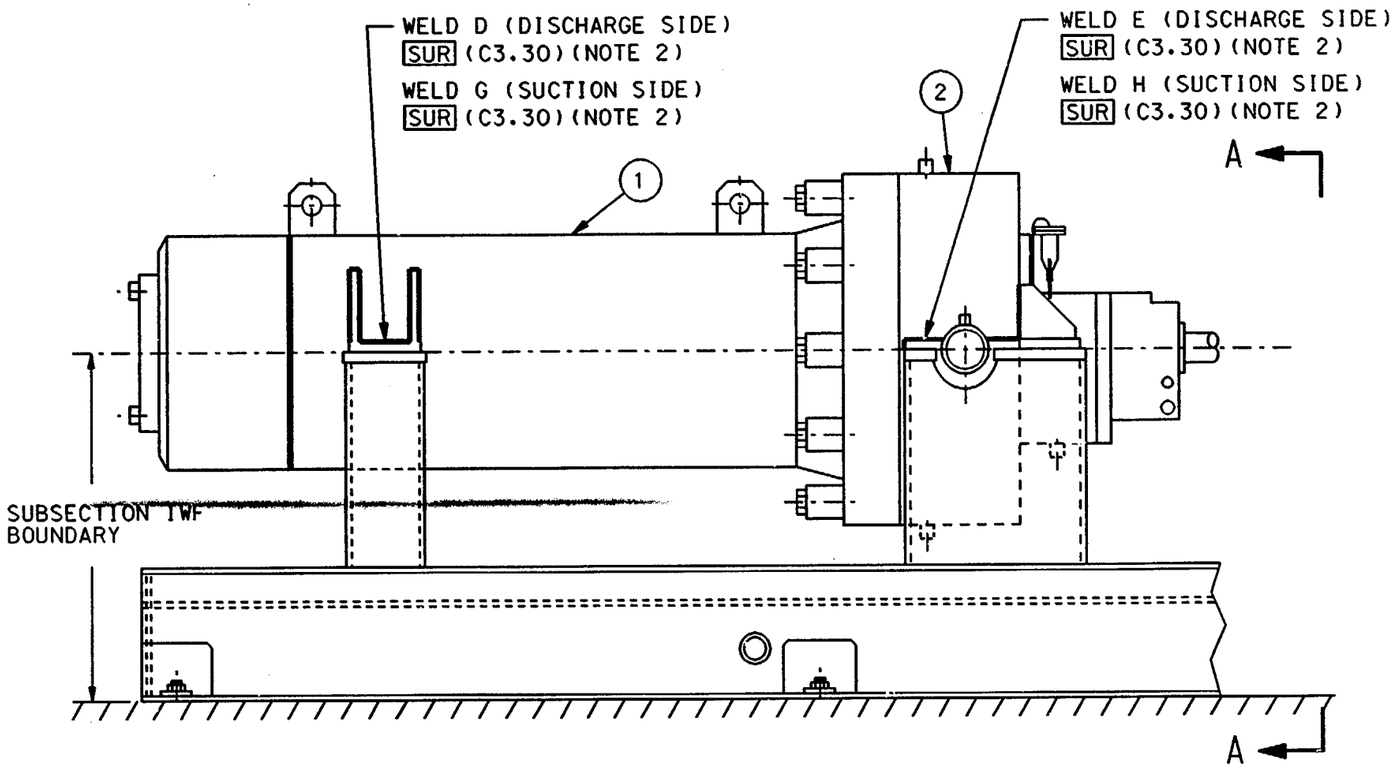

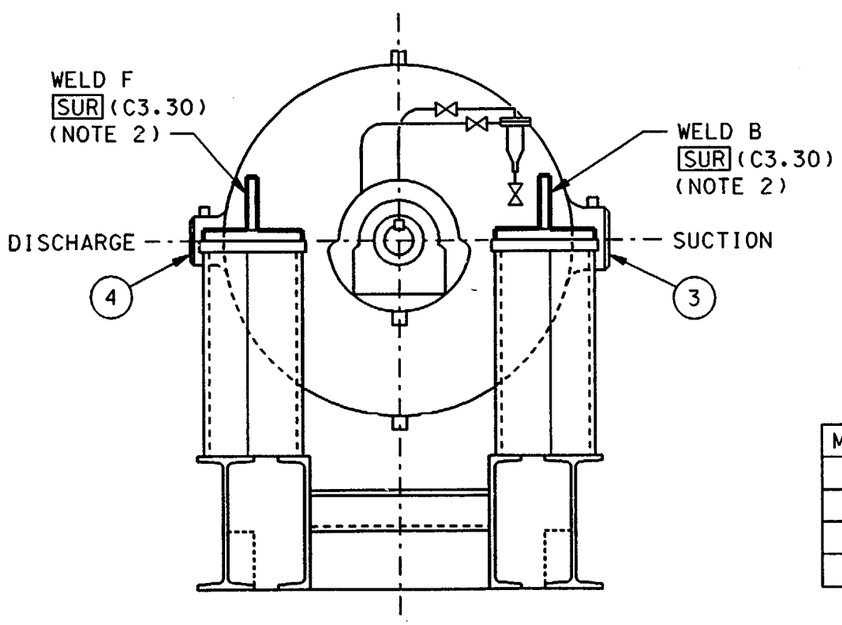

SECTION A-A

MARK NO.	DESCRIPTION
1	BARREL CASING ASSEMBLY
2	CASING HEAD
3	6" DIA. SUCTION NOZZLE
4	4" DIA. DISCHARGE NOZZLE

LEGEND:

SUR - SURFACE EXAMINATION

NOTES:

1. THIS DRAWING IS APPLICABLE TO HIGH PRESSURE INJECTION PUMPS 1-1 (P58-1) AND 1-2 (P58-2).
2. DELETED. (2)
3. UNLESS OTHERWISE SPECIFIED, ALL EXAMINATIONS ARE PERFORMED ON HIGH PRESSURE INJECTION PUMP 1-1 (P58-1).
4. THE BOLTING DETAILS, STUD HOLE LOCATIONS AND THE PRESSURE RETAINING WELDS REQUIRING EXAMINATION ARE SHOWN ON DRAWING ISI-SK-052.
5. THE MARK NUMBERS SHOWN ARE FOR INSERVICE INSPECTION ONLY.
6. A VT-3 EXAMINATION SHALL BE PERFORMED ON THE SUPPORTS FOR HIGH PRESSURE INJECTION PUMP 1-1 (P58-1). THE VT-3 EXAMINATION SHALL BE PERFORMED FROM EACH BOLTED CONNECTION TO THE BUILDING STRUCTURE TO THE CONTACT SURFACE OF THE SIX INTEGRAL ATTACHMENTS. THE ASME SECTION XI ITEM NUMBER IS F1.40. (2)

REFERENCE DRAWINGS:

1. B & W CANADA 642157 OUTLINE ARRANGEMENT (TED #7749-M-518-23)
2. B & W CANADA 643065 SECTIONAL ARRANGEMENT (TED #7749-M-518-25)

SCALE N.T.S.	DESIGNED	DRAWN WME	DATE 5-3-89

DAVIS-BESSE NUCLEAR POWER STATION
UNIT NO. 1
THE TOLEDO EDISON COMPANY

0

HP INJECTION PUMPS 1-1 AND 1-2, OUTLINE AND SUPPORTS

DRAWING NO.	REV.
ISI-SK-051	2

REV.	DATE	DESCRIPTION
2	8-21-00	INC DCN ISI-SK-051-2 PER DDR 00-1766
1	9/24/92	INC DCN ISI-SK-051-1 FOR DCR 91-0011
0	9/12/89	ISSUED FOR SECOND 10 YEAR INSERVICE INSPECTION INTERVAL

BY	CHK	ENGR	ENGR SUPV	ENG MGR
JOR	SBW	"INITIALS ON FILE"	"INITIALS ON FILE"	MK

DB:08-01-00 DFN=J:/ISI/ISISK051.DGN

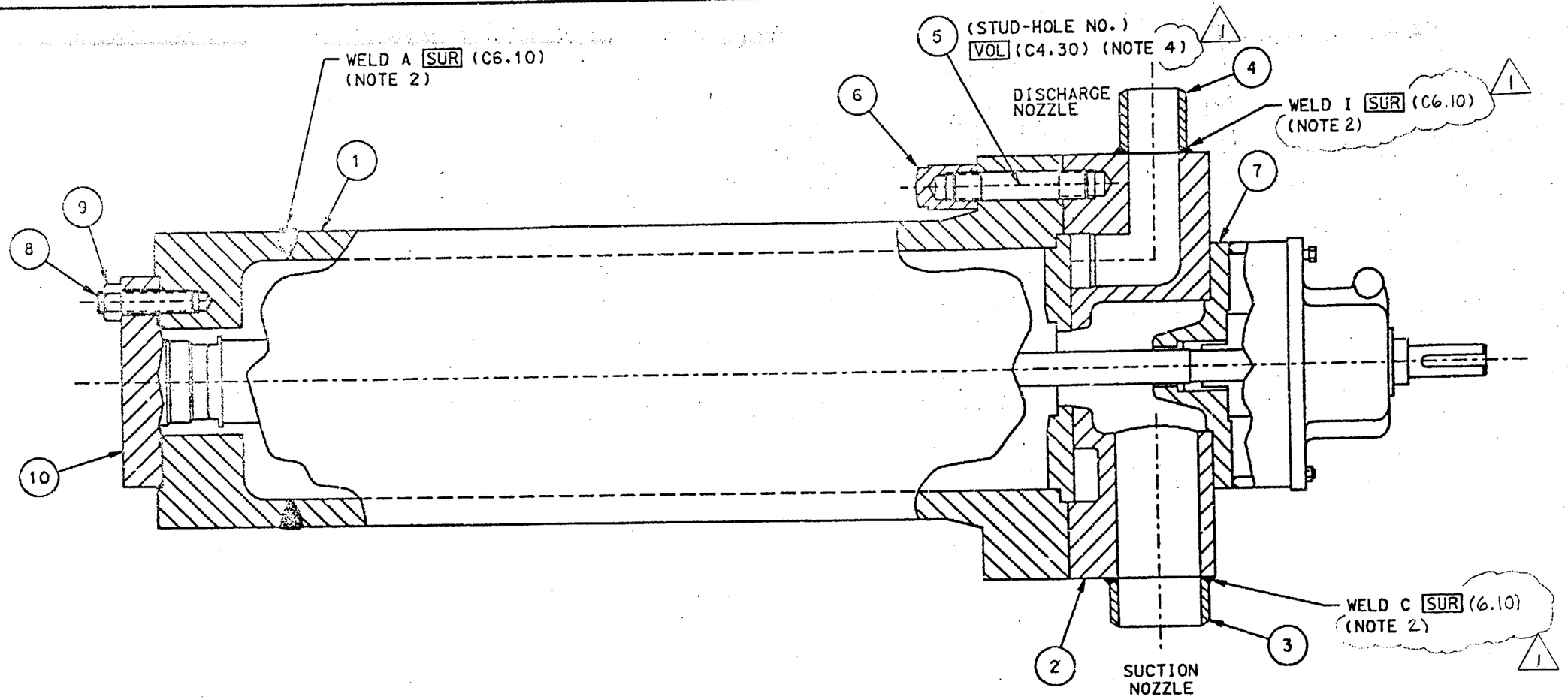

NOTES:

1. THIS DRAWING IS APPLICABLE TO HIGH PRESSURE INJECTION PUMPS 1-1 (P58-1) AND 1-2 (P58-2).
2. UNLESS OTHERWISE SPECIFIED, ALL EXAMINATIONS ARE PERFORMED ON HIGH PRESSURE INJECTION PUMP 1-1 (P58-1).
3. THE MARK NUMBERS SHOWN ARE FOR INSERVICE INSPECTION ONLY.
4. THE STUD LOCATIONS AND STUD HOLE NUMBERS ARE SHOWN IN DETAIL "A". THE EXAMINATION IDENTIFICATION NUMBER FOR STUDS CONSISTS OF THE HPI PUMP NUMBER-STUD-HOLE NUMBER (1 THRU 20). EXAMPLE: THE EXAMINATION IDENTIFICATION NUMBER FOR THE EXAMINATION OF THE HPI PUMP STUD AT LOCATION NO. 8 OF HPI PUMP NO. 1-1 IS "HP-PUMP-1-STUD-8".

LEGEND:

SUR - SURFACE EXAMINATION

VOL - VOLUMETRIC EXAMINATION

MARK NO.	DESCRIPTION
1	BARREL CASING ASSEMBLY
2	CASING HEAD
3	6" DIA. SUCTION NOZZLE
4	4" DIA. DISCHARGE NOZZLE
5	2¼" DIA. CASING STUD
6	2¼" DIA. CASING NUT
7	STUFFING BOX
8	2" DIA. CASING END COVER STUD
9	2" DIA. CASING END COVER NUT
10	CASING END COVER

REFERENCE DRAWINGS:

1. B & W CANADA 642157 OUTLINE ARRANGEMENT (TED #7749-M-517-23)
2. B & W CANADA 643065 SECTIONAL ARRANGEMENT (TED #7749-M-517-25)

SCALE N.T.S.	DESIGNED	DRAWN WME	DATE 5-3-89

DAVIS-BESSE NUCLEAR POWER STATION
UNIT NO. 1
THE TOLEDO EDISON COMPANY

Q

HP INJECTION PUMPS 1-1 AND 1-2 PRESSURE RETAINING WELDS & BOLTING DETAILS

DRAWING NO.	REV.
ISI-SK-052 SHEET 1	1

REV.	DATE	DESCRIPTION
1	9/22/92	INC. DCN 151-SK-052-1 FOR DCR 91-0011
0	01/18/89	ISSUED FOR SECOND 10 YEAR INSERVICE INSPECTION INTERVAL

JDK	SBW	JJS	
WME	RJC	ARB	
BY	CHK	ENGR	ENGR SUPV

ENG MGR

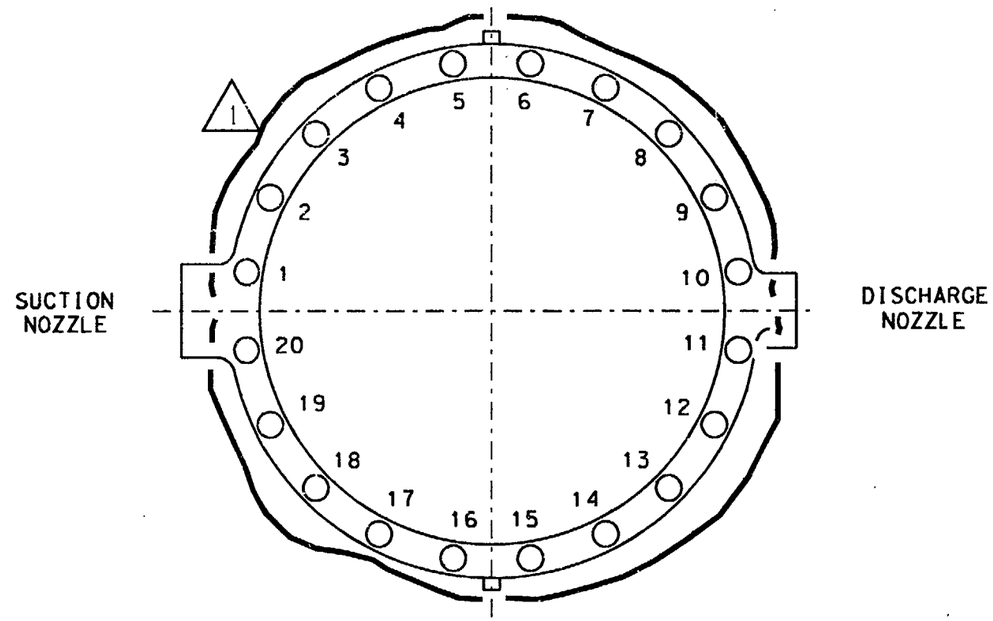

DETAIL A
STUD HOLE NUMBERS

NOTES:

1. FOR LEGEND, NOTES AND REFERENCES SEE SHEET 1 OF THIS DRAWING.

REV.	DATE	DESCRIPTION
1	12/7/92	INC DCN ISI-SK-052-2 FOR RI A 92-0232
0	9/12/89	ISSUED FOR SECOND 10 YEAR INSERVICE INSPECTION INTERVAL

BY	CHK	ENGR	ENGR SUPV	ENG MGR
JOR		JJS	"INITIALS ON FILE"	

SCALE N.T.S.	DESIGNED	DRAWN WME	DATE 5-3-89

DAVIS-BESSE NUCLEAR POWER STATION
UNIT NO. 1
THE TOLEDO EDISON COMPANY

0

HP INJECTION PUMPS 1-1 AND 1-2 PRESSURE RETAINING WELDS & BOLTING DETAILS

DRAWING NO.	REV.
ISI-SK-052 SHEET 2	1

D6:09 01-92 DFN=F:/ISI/ISI52SH2.DGN

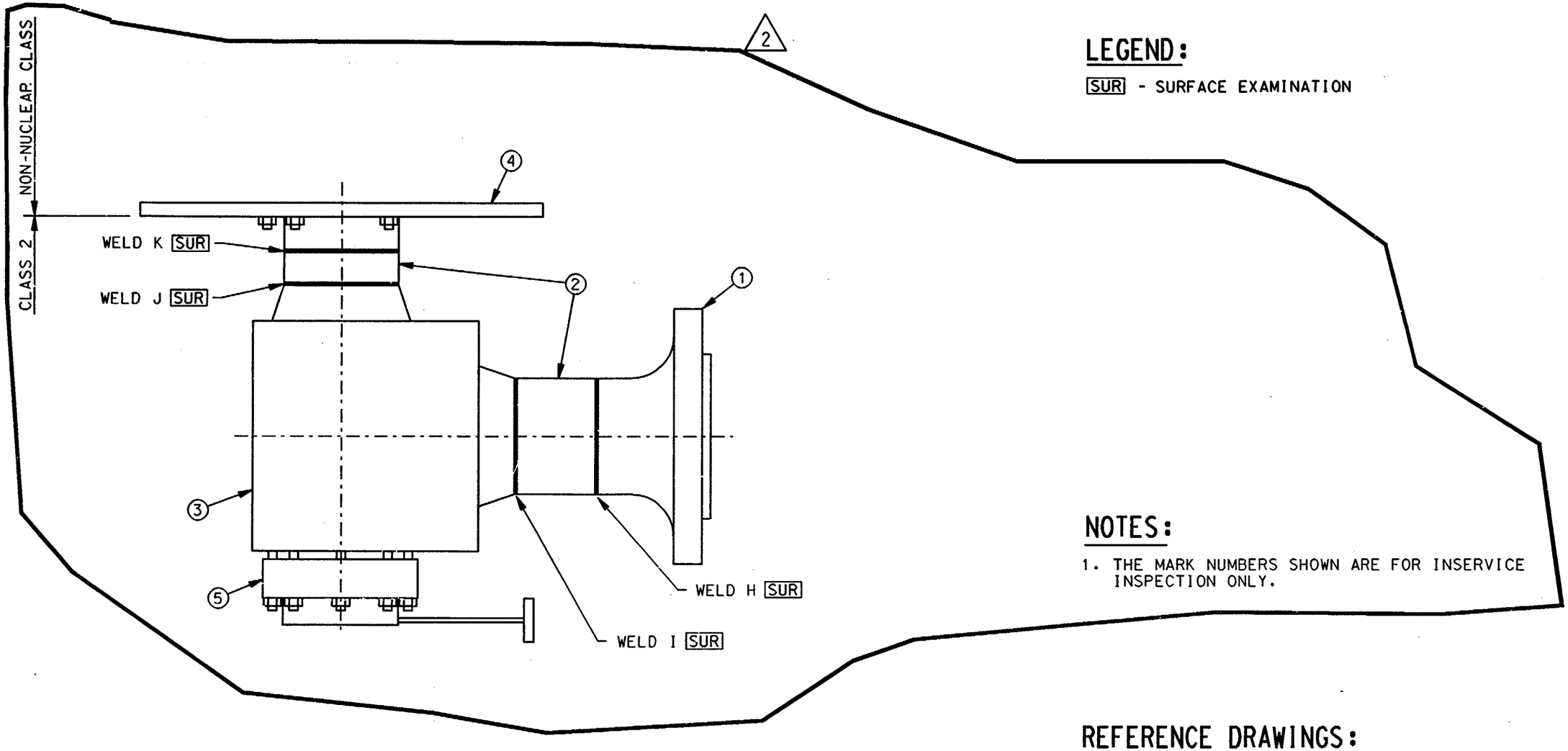

LEGEND:

SUR - SURFACE EXAMINATION

NOTES:

1. THE MARK NUMBERS SHOWN ARE FOR INSERVICE INSPECTION ONLY.

REFERENCE DRAWINGS:

CCI 114341 BODY ASSEMBLY (TED #7749-M-307-2)

CCI 114342 BODY

MARK #	DESCRIPTION
1	8" 900# FLANGE
2	8" SCH. 140 PIPE (2)
3	FORGING VALVE BODY
4	FLANGE DISCHARGE
5	FORGING VALVE BONNET

2

REV.	DATE	DESCRIPTION
2	8/21/00	INC.DCN ISI-SK-053-2 PER MOD 92-0008 SUPP.0
1	08/24/94	INC.DCN ISI-SK-053-1 PER RFA 94-0266
0	09/12/89	ISSUED FOR SECOND 10 YEAR INSERVICE INSPECTION INTERVAL

BY	CHK	ENGR	ENGR SUPV	ENG MGR
JOR	SBW	D	MB	
		INITIALS ON FILE	INITIALS ON FILE	

SCALE N.T.S.	DESIGNED	DRAWN WME	DATE 5-26-89

DAVIS-BESSE NUCLEAR POWER STATION
UNIT NO. 1
THE TOLEDO EDISON COMPANY

0

MAIN STEAM VENT VALVES
1CS11A AND ICS11B WELDS

DRAWING NO.	REV.
ISI-SK-053	2

DB 08-04-00

DFN=J:/ISI/ISISK053.DGN

THE FOLLOWING IS A LISTING OF OVERSIZED DRAWINGS CONTAINED WITHIN THIS DOCUMENT.

TO VIEW A DRAWING, REFERENCE THE DRAWING NUMBER SPECIFIC TO THE DESIRED DRAWING (NOTED ON THE LIST) AND LOCATE IT WITHIN THIS PACKAGE OR, PERFORM A SEARCH USING THE DRAWING NUMBER

NOTE: Because of these page's large file size, it may be more convenient to copy the file to a local drive and use the Imaging (Wang) viewer, which can be accessed from the Programs/Accessories menu.

TABLE 1 : ISI BOUNDARY DIAGRAMS

STARTUP SYSTEM NO.	SYSTEM ACRONYM	ISI BOUNDARY DIAGRAM NO.	SYSTEM DESCRIPTION	P & ID NO.
N/A	ALL	ISID2-001	ISI BOUNDARY DIAGRAMS-DRAWING INDEX/ LEGEND SHEET	—
083-01	MS	ISID2-003A	MAIN STEAM AND REHEAT SYSTEM SH.1	M-003A
083-01	MS	ISID2-003C	MAIN STEAM AND REHEAT SYSTEM SH.3	M-003C
050-03	AF	ISID2-006D	AUXILIARY FEEDWATER SYSTEM	M-006D
063-01	SP	ISID2-007A	STEAM GENERATOR SECONDARY SYSTEM	M-007A
050-01/063-01	SP	ISID2-007B	STEAM GENERATOR SECONDARY SYSTEM	M-007B
037-02	DW	ISID2-010C	MAKE-UP WATER TREATMENT SYSTEM	M-010C
018-01	IA	ISID2-015A	INSTRUMENT AIR SYSTEM	M-015A
018-01	SA	ISID2-015D	STATION AIR SYSTEM	M-015B
026-02	DO	ISID2-017A	DIESEL GENERATORS	M-017A
024-01	DA	ISID2-017B	DIESEL GENERATORS AIR START	M-017B
074-01	NN	ISID2-019	NITROGEN SUPPLY SYSTEM	M-019
LATER	CV	ISID2-029B	AUX. BLDG. RADWASTE, FUEL HANDLING AND ACCESS CONTROL AREAS,SH.2 (HV & AC AIR FLOW DIA.)	M-028B
LATER	CV	ISID2-029C	CONTAINMENT AND PENETRATION ROOMS	M-029C
LATER	CV	ISID2-029D	CONTAINMENT AND PENETRATION ROOMS SH. 3 (HV & AC AIR FLOW DIAGRAM)	M-029D
LATER	CV	ISID2-029E	CONTAINMENT AND PENETRATION ROOMS SH. 4 (HV & AC AIR FLOW DIAGRAM)	M-029E
064-02	RC	ISID2-030A	REACTOR COOLANT SYSTEM	M-030A
065-01	MU	ISID2-031A	MAKE-UP AND PURIFICATION SYSTEM	M-031A
065-01	MU	ISID2-031B	MAKE-UP AND PURIFICATION SYSTEM	M-031B
065-01	MU	ISID2-031C	MAKE-UP AND PURIFICATION SYSTEM	M-031C
052-01	HP	ISID2-033A	HIGH PRESSURE INJECTION	M-033A
049-02	DH	ISID2-033B	DECAY HEAT TRAIN 1	M-033B,042C 5
049-02	DH	ISID2-033C	DECAY HEAT TRAIN 2	M-033C,042C
051-01/061-01	CF/CS	ISID2-034	EMERGENCY CORE COOLING SYSTEM CTMT. SPRAY AND CORE FLOODING SYSTEMS	M-034
067-01	SF	ISID2-035	SPENT FUEL POOL COOLING SYSTEM	M-035
016-04	CC	ISID2-036A	COMPONENT COOLING WATER SYSTEM	M-036A
016-04	CC	ISID2-036B	COMPONENT COOLING WATER SYSTEM	M-036B
016-04	CC	ISID2-036C	COMPONENT COOLING WATER SYSTEM	M-036C
064-02	RC	ISID2-040A	REACTOR COOLANT SYSTEM DETAILS	M-040A
064-02	RC	ISID2-040D	REACTOR COOLANT PUMP AND MOTOR	M-040D
011-01	SW	ISID2-041A	SERVICE WATER PUMPS & SECONDARY SERVICE WATER SYSTEM	M-041A
011-01	SW	ISID2-041B	PRIMARY SERVICE WATER SYSTEM	M-041B
011-01	SW	ISID2-041C	SERVICE WATER SYSTEM FOR CONTAINMENT AIR COOLERS	M-041C
020-01	DR	ISID2-046	STATION DRAINAGE SYSTEMS	M-046
ALL	ALL	ISID2-023	CONTAINMENT LEAK-RATE TEST DIAGRAM	M-023

TABLE 1

ISIM DRAWING NUMBER	TITLE
ISIM2-200	INSERVICE INSPECTION ISOMETRIC DRAWING INDEX / LEGEND SHEET
ISIM2-203A	MAIN STEAM SYSTEM - CONTAINMENT BUILDING - STEAM GENERATOR 1-1
ISIM2-203B	MAIN STEAM SYSTEM - CONTAINMENT BUILDING - STEAM GENERATOR 1-2
ISIM2-203F	MAIN STEAM SYSTEM - SUPPLY TO AUX FEED PUMP TURBINE 1-1
ISIM2-203H	MAIN STEAM SYSTEM - SUPPLY TO AUX FEED PUMP TURBINE & EXHAUST
ISIM2-203J SH.1	MAIN STEAM SYSTEM - MAIN STEAM CROSSOVER
ISIM2-203J SH.2	MAIN STEAM SYSTEM - MAIN STEAM CROSSOVER
ISIM2-203K	MAIN STEAM SYSTEM - AUXILIARY FEED PUMP TURBINE EXHAUST
ISIM2-206F SH.1	AUXILIARY FEEDWATER SYSTEM - AUXILIARY FEED PUMP DISCHARGE TO STEAM GENERATOR
ISIM2-206F SH.2	AUXILIARY FEEDWATER SYSTEM - AUXILIARY FEED PUMP DISCHARGE TO STEAM GENERATOR
ISIM2-206F SH.3	AUXILIARY FEEDWATER SYSTEM - AUXILIARY FEED PUMP DISCHARGE TO STEAM GENERATOR
ISIM2-206F SH.4	AUXILIARY FEEDWATER SYSTEM - AUXILIARY FEED PUMP DISCHARGE TO STEAM GENERATOR
ISIM2-206F SH.5	AUXILIARY FEEDWATER SYSTEM - AUXILIARY FEED PUMP DISCHARGE TO STEAM GENERATOR
ISIM2-206G	CONDENSATE & SERVICE WATER SYSTEMS - AUX & START-UP FEED PUMPS SUCTION & RECIRC
ISIM2-206N	AUXILIARY FEEDWATER SYSTEM - CONTAINMENT
ISIM2-206O	CONDENSATE SYSTEM - MOTOR DRIVEN FEED PUMP P-241 DISCHARGE
ISIM2-207A	STEAM GENERATOR DRAIN SYSTEM - CONTAINMENT BUILDING
ISIM2-207C SH.1	MAIN FEEDWATER SYSTEM - AUXILIARY & CONTAINMENT BUILDING
ISIM2-207C SH.2	MAIN FEEDWATER SYSTEM - AUXILIARY & CONTAINMENT BUILDING
ISIM2-207E	STEAM GENERATOR DRAIN NO. 1-1 DRAIN / BLOWDOWN SYSTEM - CONTAINMENT BUILDING
ISIM2-207F	STEAM GENERATOR DRAIN NO. 1-1 DRAIN / BLOWDOWN SYSTEM - AUXILIARY & TURBINE BUILDING
ISIM2-207G	STEAM GENERATOR DRAIN NO. 1-2 DRAIN / BLOWDOWN SYSTEM - AUXILIARY & TURBINE BUILDING
ISIM2-210E	MAKE-UP WATER TREATMENT SYSTEM - AUXILIARY BUILDING
ISIM2-210H	MAKE-UP WATER TREATMENT SYSTEM - CONTAINMENT BUILDING
ISIM2-217A SH.1	EMERGENCY DIESEL GENERATORS FUEL OIL SYSTEM
ISIM2-217A SH.2	EMERGENCY DIESEL GENERATORS FUEL OIL SYSTEM
ISIM2-229 SH.1	HYDROGEN DILUTION SYSTEM & MISCELLANEOUS CONTAINMENT PENETRATIONS - AUXILIARY & CONTAINMENT BUILDINGS
ISIM2-229 SH.2	HYDROGEN DILUTION SYSTEM & MISCELLANEOUS CONTAINMENT PENETRATIONS - AUXILIARY & CONTAINMENT BUILDINGS
ISIM2-229 SH.3	INTEGRATED LEAK RATE TEST LINE - CONTAINMENT & AUX BUILDING
ISIM2-230A	PRESSURIZER RELIEF SYSTEM - CONTAINMENT BUILDINGS
ISIM2-230B	REACTOR COOLANT SYSTEM
ISIM2-230C	PRESSURIZER SPRAY AND SURGE LINES
ISIM2-230D	REACTOR VESSEL HEAD TO HOT LEG VENT LINE
ISIM2-231A	PURIFICATION REACTOR COOLANT LETDOWN SYSTEM - CONTAINMENT BUILDING
ISIM2-231B SH.1	MAKE-UP & PURIFICATION SYSTEM - AUXILIARY BUILDING SH.1
ISIM2-231B SH.2	MAKE-UP & PURIFICATION SYSTEM - AUXILIARY BUILDING SH.2
ISIM2-231B SH.3	MAKE-UP & PURIFICATION SYSTEM - AUXILIARY BUILDING SH.3
ISIM2-231C	MAKE-UP & PURIFICATION SYSTEM - AUXILIARY BUILDING SH.4
ISIM2-231D SH.1	MAKE-UP & PURIFICATION SYSTEM - AUXILIARY BUILDING SH.5
ISIM2-231D SH.2	MAKE-UP & PURIFICATION SYSTEM - AUXILIARY BUILDING SH.6
ISIM2-231D SH.3	MAKE-UP & PURIFICATION SYSTEM - AUXILIARY BUILDING SH.7
ISIM2-231E	MAKE-UP & PURIFICATION SYSTEM - AUXILIARY BUILDING SH.8
ISIM2-233A	EMERGENCY CORE COOLING SYSTEM - BORATED WATER SUPPLY
ISIM2-233B SH.1	EMERGENCY CORE COOLING SYSTEM - PUMP SUCTION PIPING
ISIM2-233B SH.2	EMERGENCY CORE COOLING SYSTEM - PUMP SUCTION PIPING
ISIM2-233C SH.1	DECAY HEAT REMOVAL SYSTEM - CONTAINMENT & AUX BUILDING NORMAL COOLDOWN
ISIM2-233C SH.2	DECAY HEAT REMOVAL SYSTEM - CONTAINMENT & AUX BUILDING NORMAL COOLDOWN
ISIM2-233D SH.1	HIGH PRESSURE INJECTION SYSTEM - AUXILIARY BUILDING
ISIM2-233D SH.2	HIGH PRESSURE INJECTION SYSTEM - AUXILIARY BUILDING
ISIM2-233D SH.3	HIGH PRESSURE INJECTION SYSTEM - AUXILIARY BUILDING
ISIM2-233D SH.4	HIGH PRESSURE INJECTION SYSTEM - AUXILIARY BUILDING
ISIM2-233E SH.1	HIGH PRESSURE INJECTION SYSTEM - CONTAINMENT BUILDING
ISIM2-233E SH.2	HIGH PRESSURE INJECTION SYSTEM - CONTAINMENT BUILDING
ISIM2-233F SH.1	LOW PRESSURE INJECTION SYSTEM - AUXILIARY BUILDING
ISIM2-233F SH.2	LOW PRESSURE INJECTION SYSTEM - AUXILIARY BUILDING
ISIM2-233F SH.3	LOW PRESSURE INJECTION SYSTEM - AUXILIARY BUILDING
ISIM2-233G	REFUELING CANAL & INCORE TANK FILL & DRAIN SYSTEM - CONTAINMENT BUILDING
ISIM2-233H	MAKE-UP & PURIFICATION SYSTEM - AUXILIARY BUILDING SH.9
ISIM2-234A	LOW PRESSURE INJECTION & CORE FLOODING SYSTEMS - CONTAINMENT BUILDING
ISIM2-234B SH.1	CONTAINMENT SPRAY SYSTEM - CONTAINMENT BUILDING
ISIM2-234B SH.2	CONTAINMENT SPRAY SYSTEM - CONTAINMENT BUILDING
ISIM2-234B SH.3	CONTAINMENT SPRAY SYSTEM - CONTAINMENT BUILDING
ISIM2-234C	CONTAINMENT SPRAY SYSTEM - AUXILIARY BUILDING - PUMP 1-1 DISCHARGE
ISIM2-234D SH.1	CONTAINMENT SPRAY SYSTEM - AUXILIARY BUILDING - PUMP 1-2 DISCHARGE
ISIM2-234D SH.2	CONTAINMENT SPRAY SYSTEM - AUXILIARY BUILDING - PUMP 1-2 DISCHARGE
ISIM2-235A SH.1	SPENT FUEL POOL COOLING SYSTEM - AUXILIARY BUILDING AREA 7
ISIM2-235A SH.2	SPENT FUEL POOL COOLING SYSTEM - AUXILIARY BUILDING AREA 7
ISIM2-235A SH.3	SPENT FUEL POOL COOLING SYSTEM - AUXILIARY BUILDING AREA 7
ISIM2-235A SH.4	SPENT FUEL POOL COOLING SYSTEM - AUXILIARY BUILDING AREA 7
ISIM2-235B SH.1	SPENT FUEL POOL COOLING SYSTEM - AUXILIARY BUILDING AREA 8
ISIM2-235B SH.2	SPENT FUEL POOL COOLING SYSTEM - AUXILIARY BUILDING AREA 8
ISIM2-236A SH.1	COMPONENT COOLING WATER SYSTEM - AUXILIARY BUILDING EL 545'-0"
ISIM2-236A SH.2	COMPONENT COOLING WATER SYSTEM - AUXILIARY BUILDING EL 545'-0"
ISIM2-236B SH.1	COMPONENT COOLING WATER SYSTEM - AUXILIARY BUILDING EL 565'-0"
ISIM2-236B SH.2	COMPONENT COOLING WATER SYSTEM - AUXILIARY BUILDING EL 565'-0"
ISIM2-236C SH.1	COMPONENT COOLING WATER SYSTEM - HEAT EXCHANGERS INLETS EL 585'-0"
ISIM2-236C SH.2	COMPONENT COOLING WATER SYSTEM - HEAT EXCHANGERS INLETS EL 585'-0"
ISIM2-236C SH.3	COMPONENT COOLING WATER SYSTEM - HEAT EXCHANGERS INLETS EL 585'-0"
ISIM2-236D SH.1	COMPONENT COOLING WATER SYSTEM - C.C. HEAT EXCHANGERS OUTLET PIPING - EL 585'-0"
ISIM2-236D SH.2	COMPONENT COOLING WATER SYSTEM - C.C. HEAT EXCHANGERS OUTLET PIPING - EL 585'-0"
ISIM2-236D SH.3	COMPONENT COOLING WATER SYSTEM - C.C. HEAT EXCHANGERS OUTLET PIPING - EL 585'-0"
ISIM2-236E SH.1	COMPONENT COOLING WATER SYSTEM - CONTAINMENT BUILDING
ISIM2-236E SH.2	COMPONENT COOLING WATER SYSTEM - CONTAINMENT BUILDING
ISIM2-236F SH.1	COMPONENT COOLING WATER SYSTEM - CONTAINMENT BUILDING
ISIM2-236F SH.2	COMPONENT COOLING WATER SYSTEM - CONTAINMENT BUILDING
ISIM2-236F SH.3	COMPONENT COOLING WATER SYSTEM - CONTAINMENT BUILDING
ISIM2-236F SH.4	COMPONENT COOLING WATER SYSTEM - CONTAINMENT BUILDING
ISIM2-236H SH.1	COMPONENT COOLING WATER SYSTEM - SUPPLY & RETURN - EMERGENCY DIESEL GENERATOR
ISIM2-236H SH.2	COMPONENT COOLING WATER SYSTEM - SUPPLY & RETURN - EMERGENCY DIESEL GENERATOR
ISIM2-236H SH.3	COMPONENT COOLING WATER SYSTEM - SUPPLY & RETURN - EMERGENCY DIESEL GENERATOR
ISIM2-236H SH.4	COMPONENT COOLING WATER SYSTEM - SUPPLY & RETURN - EMERGENCY DIESEL GENERATOR
ISIM2-236J	COMPONENT COOLING SYSTEM-EMBEDDED PIPING-CONTROL ROOM FLOOR EL.623'-0"
ISIM2-240A	REACTOR COOLANT DRAIN SYSTEM - CONTAINMENT BUILDING
ISIM2-240B	QUENCH TANK DRAIN SYSTEM - CONTAINMENT & AUXILIARY BUILDINGS
ISIM2-240C	REACTOR COOLANT DRAIN & GASEOUS RADWASTE SYSTEMS
ISIM2-240D	CONTAINMENT BUILDING VENT SYSTEM
ISIM2-241A	SERVICE WATER SYSTEM - COOLERS & RETURN LINE
ISIM2-241B SH.1	SERVICE WATER SYSTEM - VALVE ROOMS & TUNNEL
ISIM2-241B SH.2	SERVICE WATER SYSTEM - VALVE ROOMS & TUNNEL
ISIM2-241C SH.1	SERVICE WATER SYSTEM - AUXILIARY BUILDING - SUPPLY PIPING
ISIM2-241C SH.2	SERVICE WATER SYSTEM - AUXILIARY BUILDING - SUPPLY PIPING
ISIM2-241D SH.1	SERVICE WATER SYSTEM - AUXILIARY BUILDING - RETURN PIPING
ISIM2-241D SH.2	SERVICE WATER SYSTEM - AUXILIARY BUILDING - RETURN PIPING
ISIM2-241E	SERVICE WATER SYSTEM - CONTAINMENT AIR COOLER 1-1
ISIM2-241F	SERVICE WATER SYSTEM - CONTAINMENT AIR COOLER 1-2
ISIM2-241G	SERVICE WATER SYSTEM - CONTAINMENT AIR COOLER 1-3
ISIM2-241H SH.1	SERVICE WATER SYSTEM - ECCS ROOM COOLERS SUPPLY & RETURN
ISIM2-241H SH.2	SERVICE WATER SYSTEM - ECCS ROOM COOLERS SUPPLY & RETURN
ISIM2-241H SH.3	SERVICE WATER SYSTEM - ECCS ROOM COOLERS SUPPLY & RETURN
ISIM2-241H SH.4	SERVICE WATER SYSTEM - ECCS ROOM COOLERS SUPPLY & RETURN
ISIM2-241L	SERVICE WATER SYSTEM - AUXILIARY BUILDING - RETURN PIPING
ISIM2-241M	SERVICE WATER SYSTEM - AUXILIARY BUILDING - SUPPLY TO MOTOR DRIVEN FEED PUMP
ISIM2-246A	LIQUID RADWASTE SYSTEM - NORMAL SUMP PUMPS DISCHARGE - CONTAINMENT & AUXILIARY BUILDINGS
ISIM2-268D	EMERGENCY DIESEL GENERATOR AIR INTAKE & EXHAUST
ISIM2-E371	ELECTRICAL PENETRATION ARRANGMENT-CONTAINMENT VESSEL