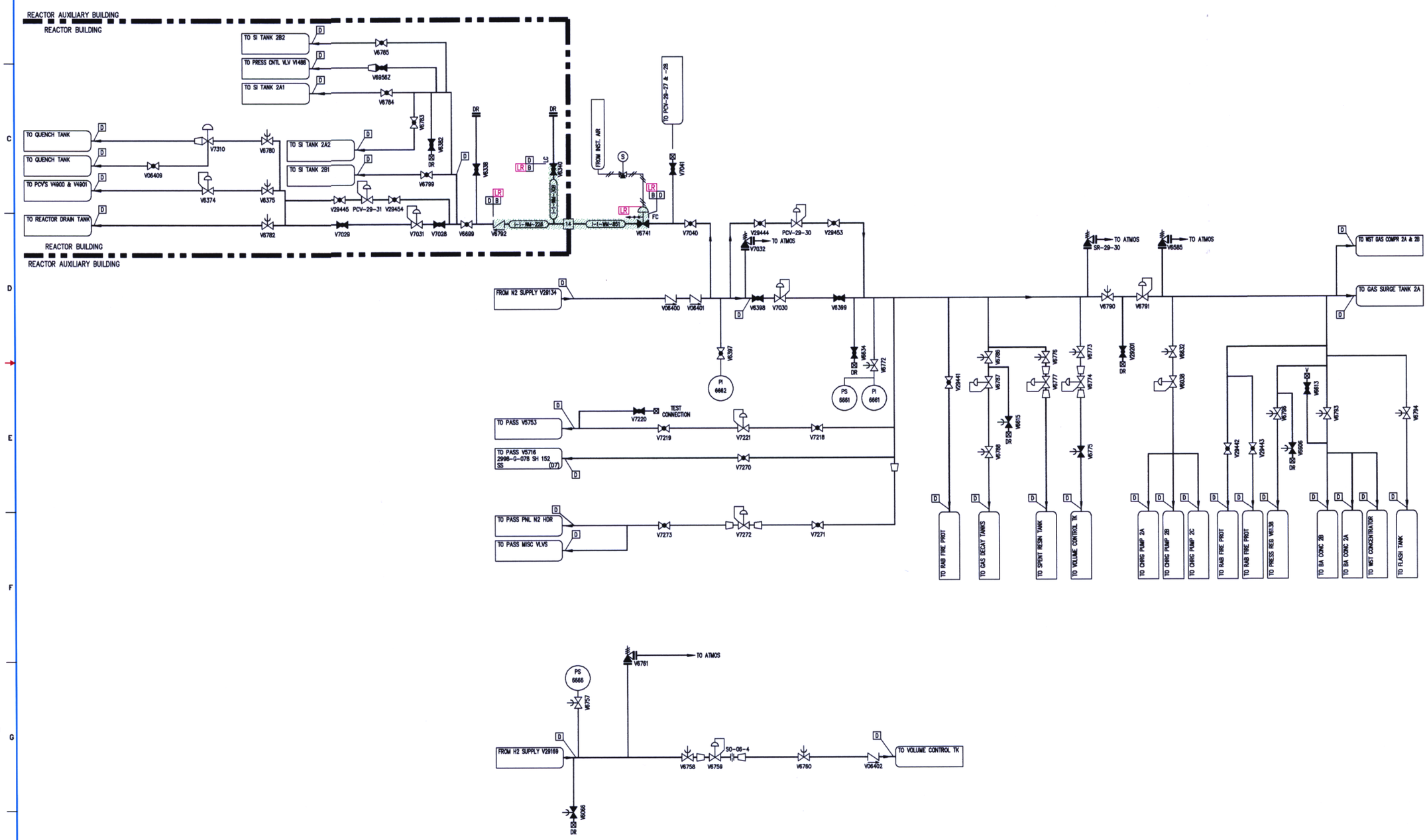

D-115

NOTES:

1. FOR GENERAL NOTES & LEGEND SEE DRAWING NO. 2-NOTES-01.

FLORIDA POWER & LIGHT
ST. LUCIE NUCLEAR UNIT 2

WASTE MANAGEMENT

LICENSE RENEWAL BOUNDARY DRAWING

DRAWING NUMBER	REVISION
2-WM-03	0

FPL

2WM03.DWG