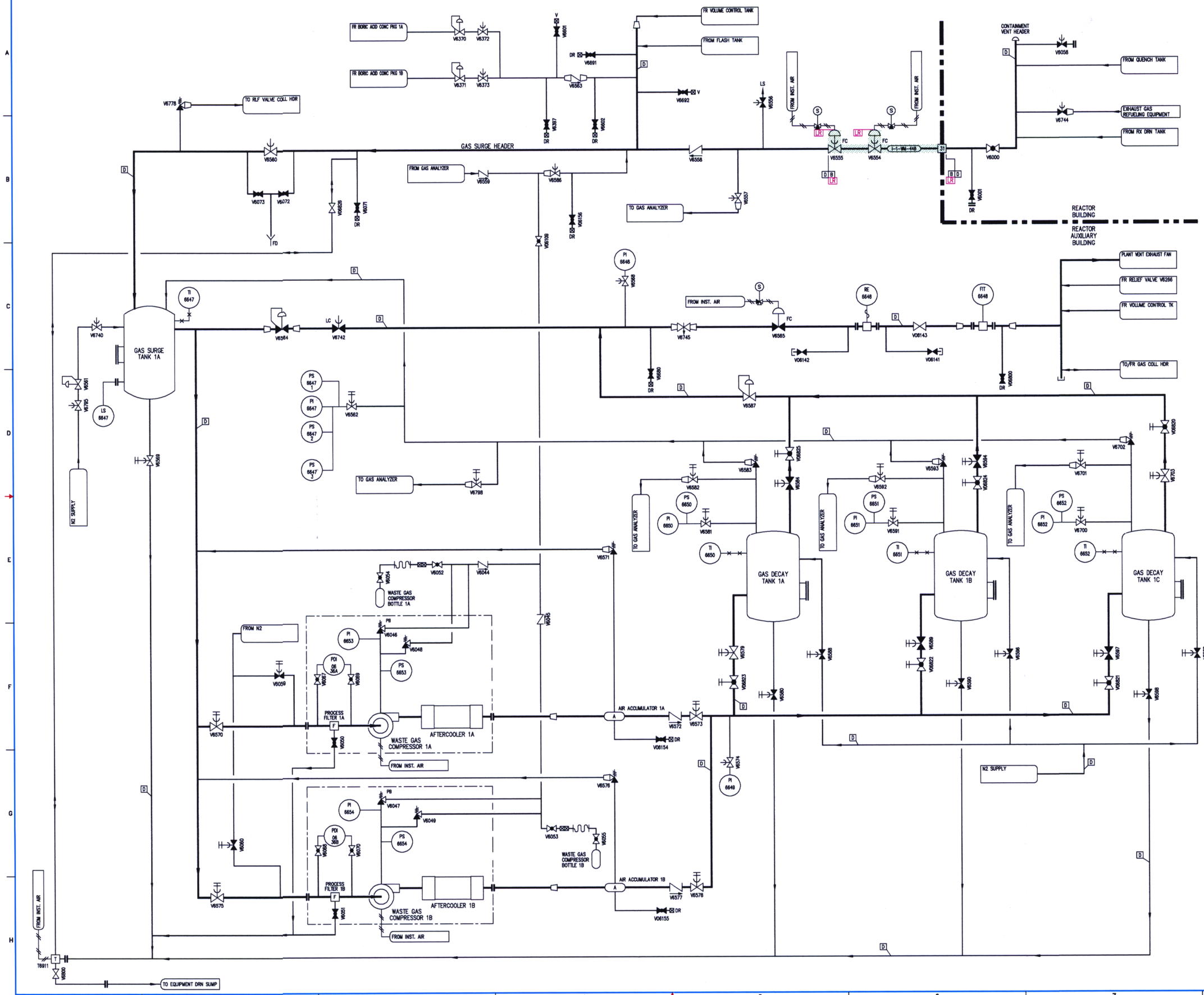

D-111

NOTES:

1. FOR GENERAL NOTES & LEGEND SEE DRAWING NO. 1-NOTES-01.

FLORIDA POWER & LIGHT
ST. LUCIE NUCLEAR UNIT 1

WASTE MANAGEMENT

LICENSE RENEWAL BOUNDARY DRAWING

DRAWING NUMBER	REVISION
1-WM-02	0

FPL

1WM02.DWG