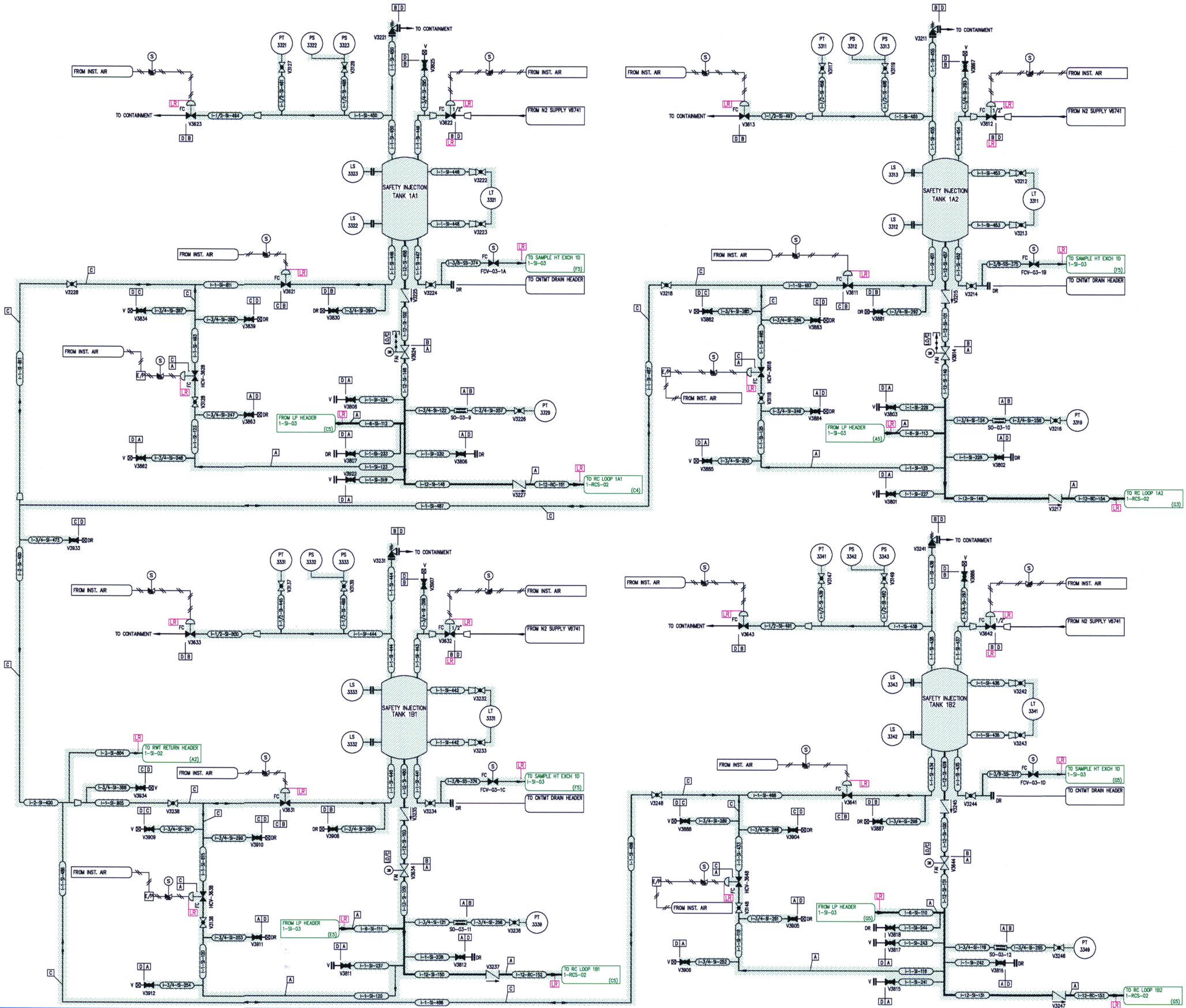

D-104

NOTES:

1. FOR GENERAL NOTES & LEGEND SEE DRAWING NO. 1-NOTES-01.

FLORIDA POWER & LIGHT
ST. LUCIE NUCLEAR UNIT 1

SAFETY INJECTION

LICENSE RENEWAL BOUNDARY DRAWING

DRAWING NUMBER	REVISION
1-SI-04	0

FPL

1SI04.DWG