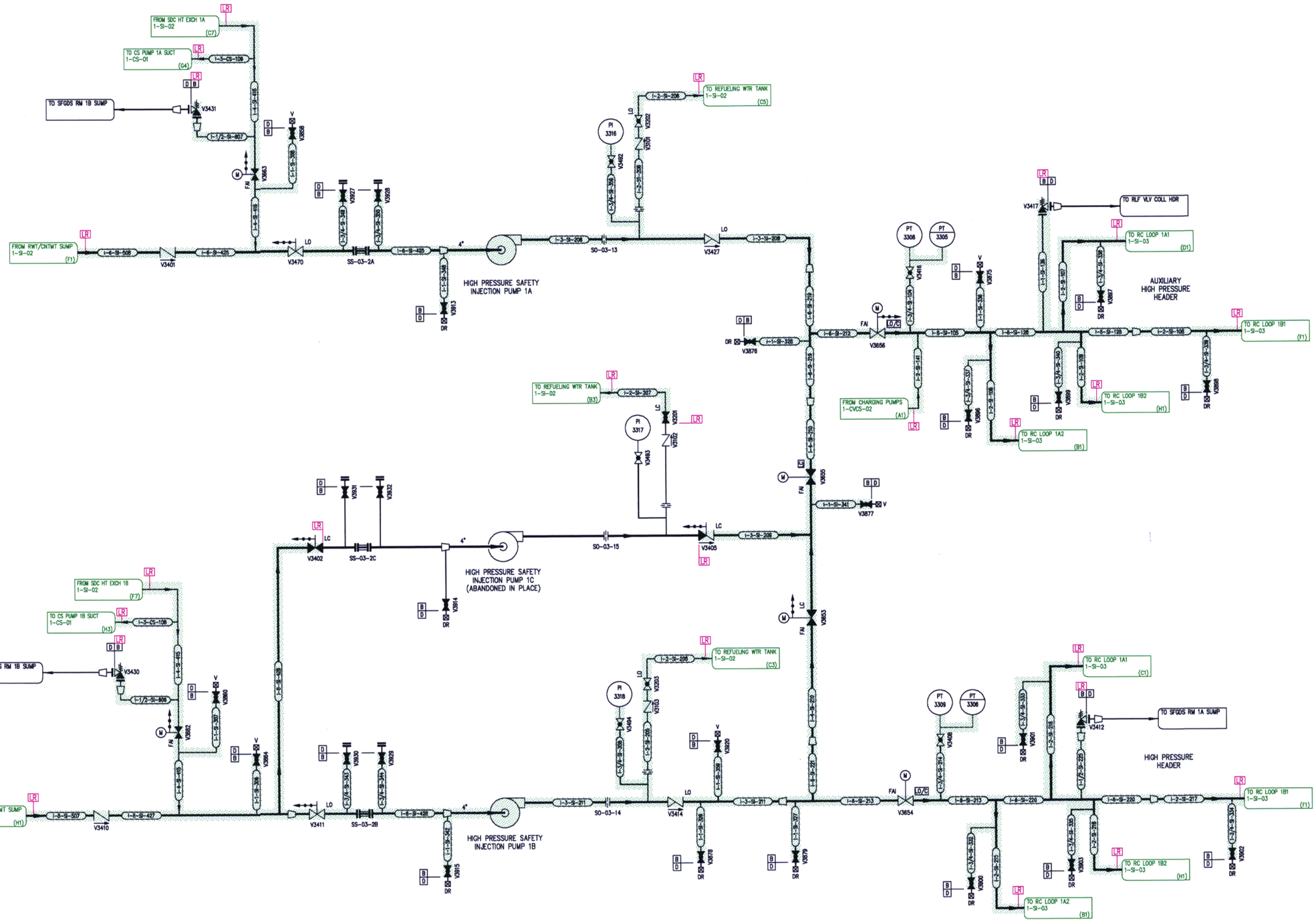


D-101

NOTES:

1. FOR GENERAL NOTES & LEGEND SEE DRAWING NO. 1-NOTES-01.

FLORIDA POWER & LIGHT
ST. LUCIE NUCLEAR UNIT 1

# SAFETY INJECTION

LICENSE RENEWAL BOUNDARY DRAWING

| DRAWING NUMBER | REVISION |
|---|---|
| 1-SI-01 | 0 |

FPL

1SI01.DWG