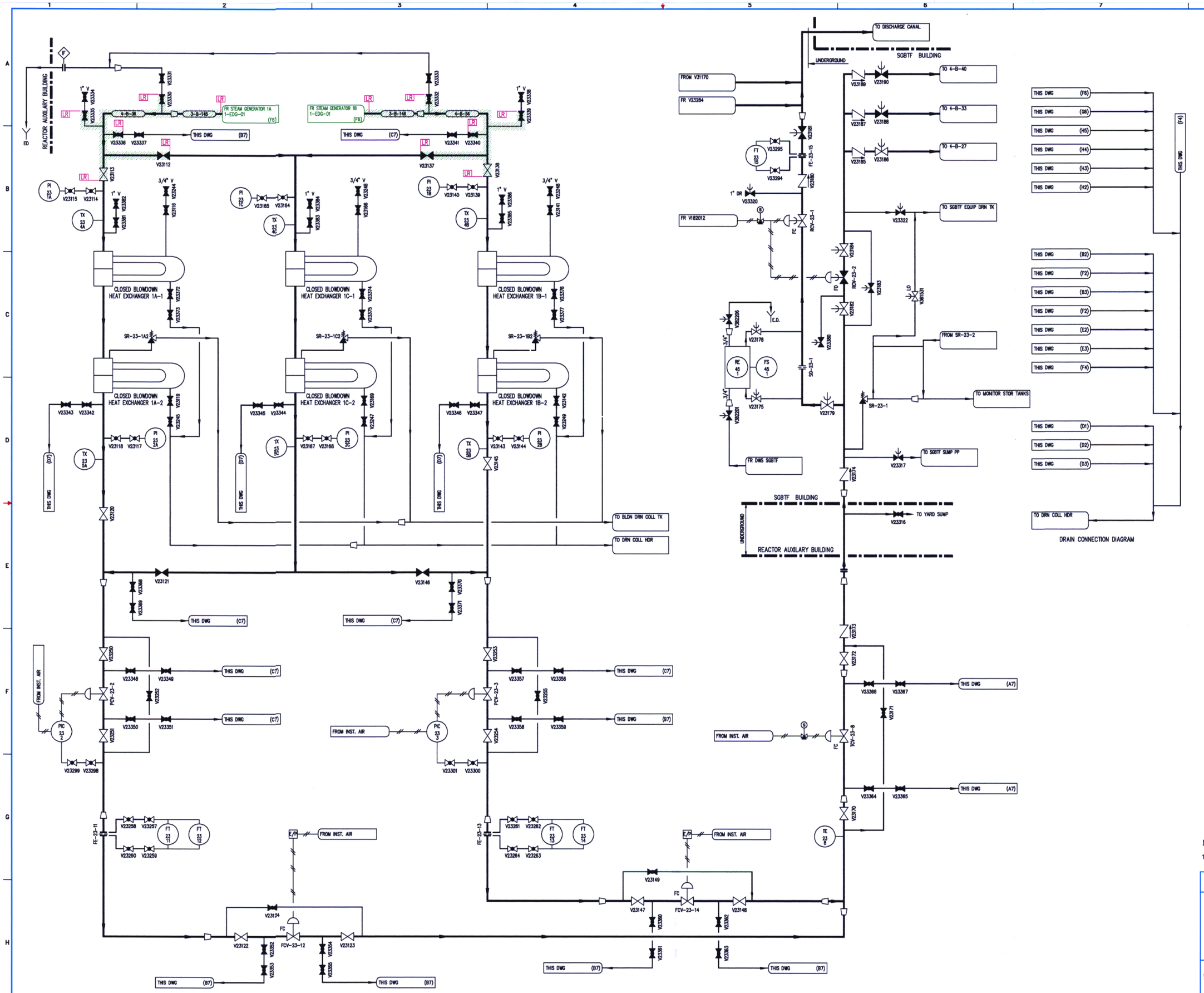

D-099

NOTES:

1. FOR GENERAL NOTES & LEGEND SEE DRAWING NO. 1-NOTES-01.

FLORIDA POWER & LIGHT
ST. LUCIE NUCLEAR UNIT 1

STEAM GENERATOR BLOWDOWN

LICENSE RENEWAL BOUNDARY DRAWING

DRAWING NUMBER	REVISION
1-SGBD-01	0

FPL

1SGBD01.DWG