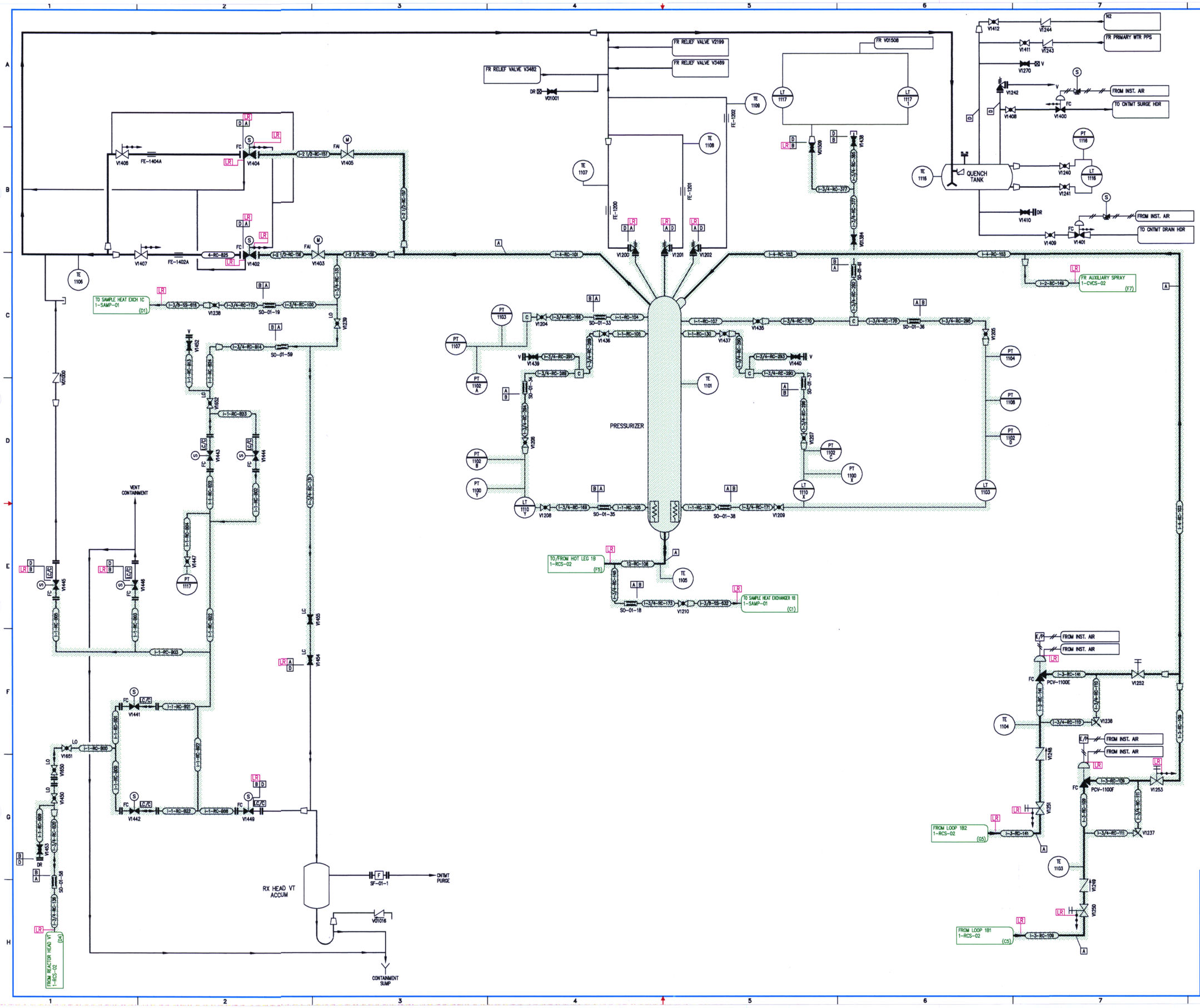

D-077

NOTES:

1. FOR GENERAL NOTES & LEGEND SEE DRAWING NO. 1-NOTES-01.

FLORIDA POWER & LIGHT
ST. LUCIE NUCLEAR UNIT 1

REACTOR COOLANT

LICENSE RENEWAL BOUNDARY DRAWING

DRAWING NUMBER	REVISION
1-RCS-01	0

1RCS01.DWG