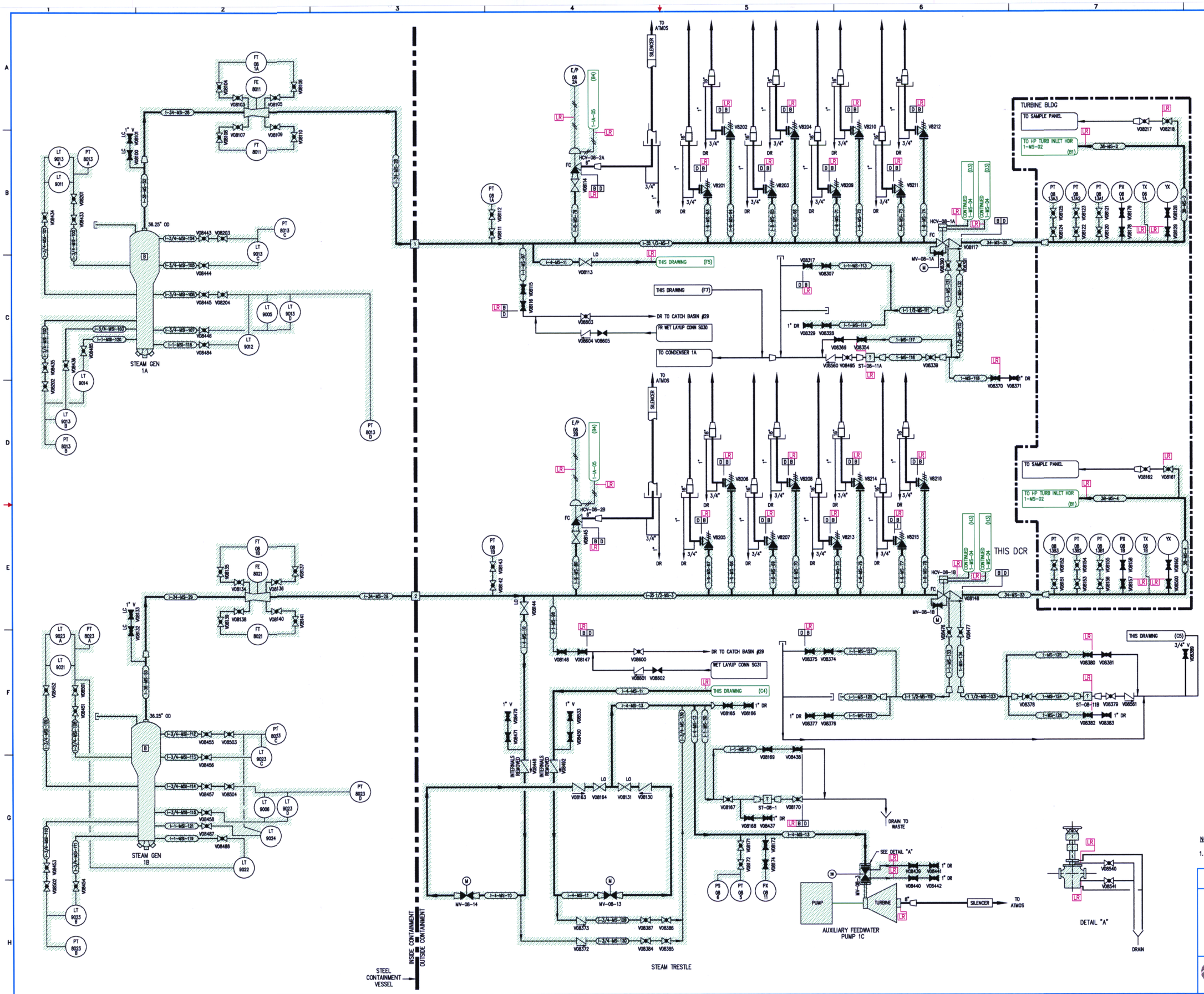

D-067

NOTES:

1. FOR GENERAL NOTES & LEGEND SEE DRAWING NO. 1-NOTES-01.

FLORIDA POWER & LIGHT
ST. LUCIE NUCLEAR UNIT 1

MAIN STEAM

LICENSE RENEWAL BOUNDARY DRAWING

DRAWING NUMBER	REVISION
1-MS-01	0

1MS01.DWG