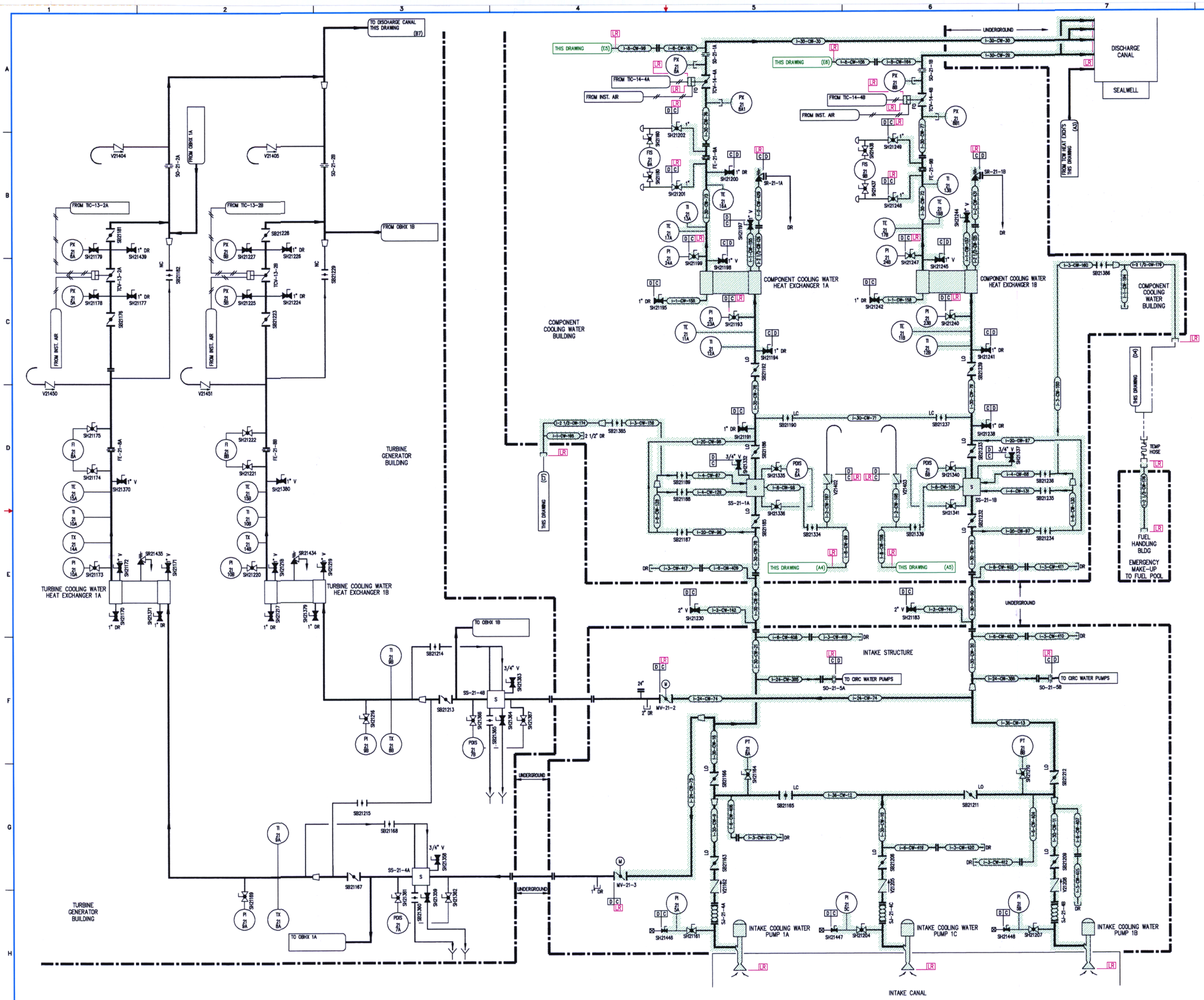


D-064

NOTES:

1. FOR GENERAL NOTES & LEGEND SEE DRAWING NO. 1-NOTES-01.

FLORIDA POWER & LIGHT
ST. LUCIE NUCLEAR UNIT 1

# INTAKE COOLING WATER

LICENSE RENEWAL BOUNDARY DRAWING

| DRAWING NUMBER | REVISION |
|---|---|
| 1-ICW-01 | 0 |

1ICW01.DWG