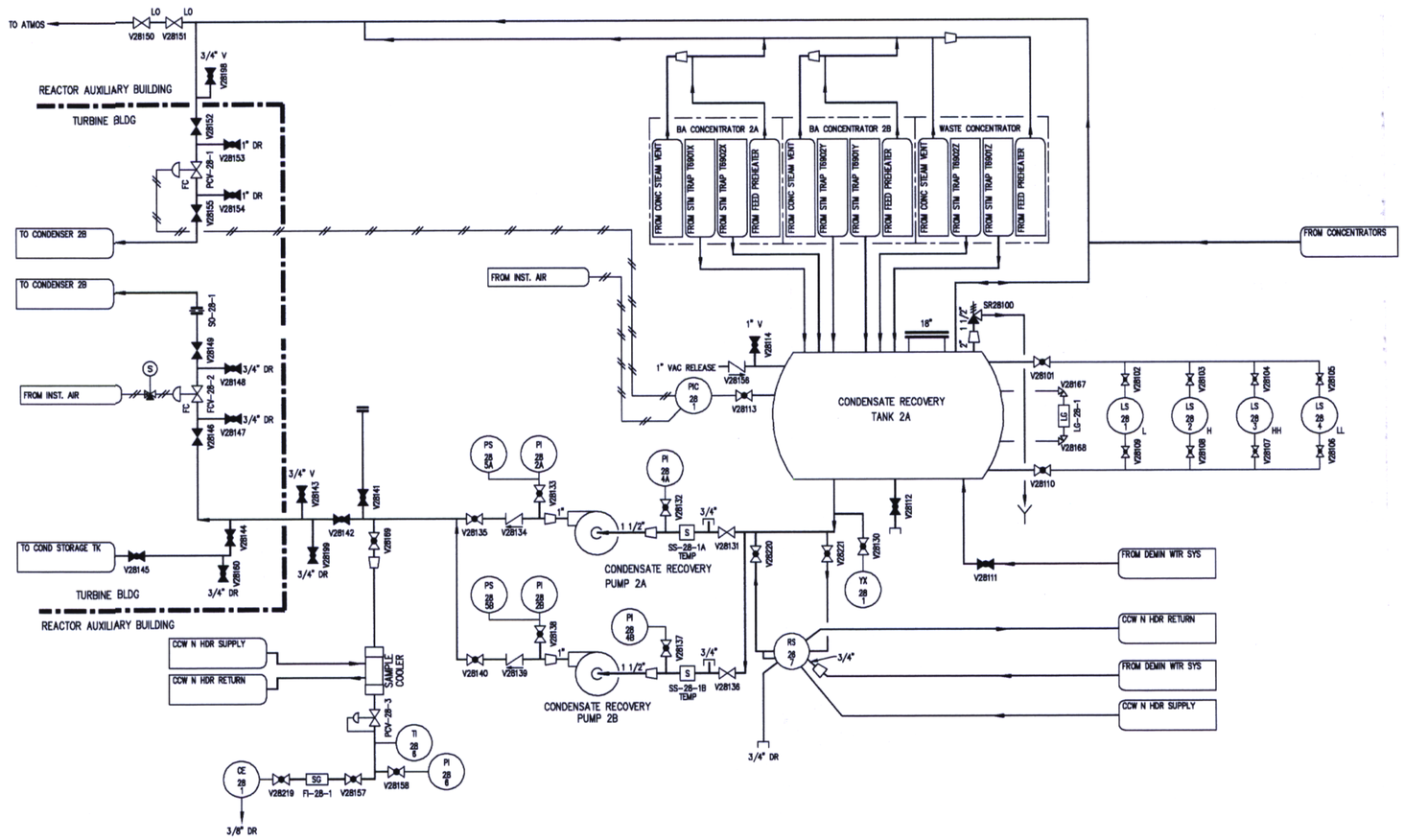

CONDENSATE RECOVERY SYSTEM

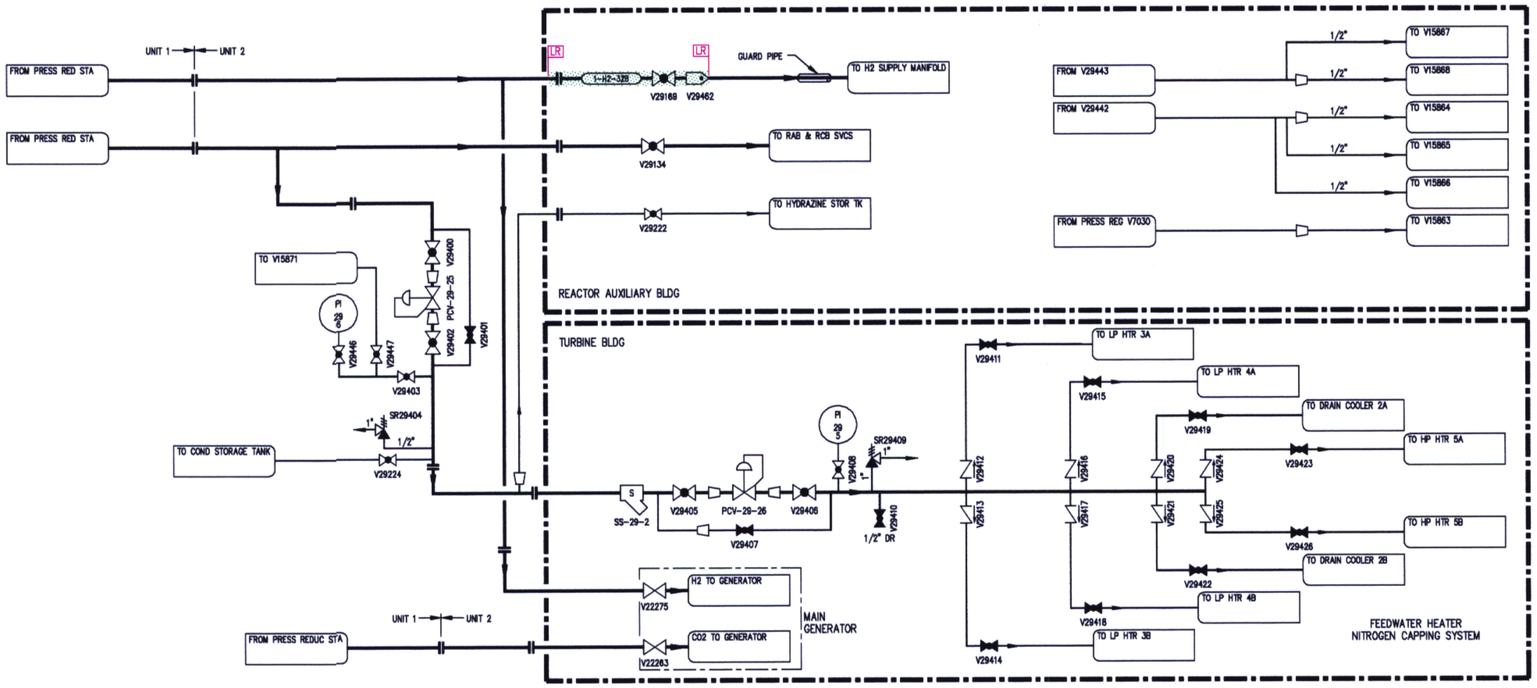

MISCELLANEOUS BULK GAS SYSTEM

D-063

NOTES:

1. FOR GENERAL NOTES & LEGEND SEE DRAWING NO. 2-NOTES-01.

FLORIDA POWER & LIGHT
ST. LUCIE NUCLEAR UNIT 2

INSTRUMENT AIR

LICENSE RENEWAL BOUNDARY DRAWING

DRAWING NUMBER	REVISION
2-IA-05	0

2IA05.DWG