POWERING PROGRESS THROUGH
SCIENCE AND TECHNOLOGY

EPRI

February 10, 2000

Document Control Desk
U. S. Nuclear Regulatory Commission
Washington, D.C. 20555-0001
Attention: Chief, Information Management Branch,
Division of Inspection and Support Programs

**SUBJECT:** **EPRI Topical Report TR-112657 Revision B-A, Revised Risk-Informed Inservice Inspection Procedure. Reference Project #669.**

**REFERENCE:** **Letter from W. Bateman, USNRC, to G. Vine, EPRI "Safety Evaluation Report Related To EPRI RI-ISI Evaluation Procedure (EPRI TR-112657, Revision B, July 1999), October 28, 1999.**

Dear Sir or Madam:

In the above reference the U.S. NRC supplied a Safety Evaluation Report on the subject topical report. EPRI has published the subject report with the Safety Evaluation incorporated. Enclosed are copies of the subject report as required by NUREG 0390. If you have any questions, please contact me at (650) 855-2564 or by e-mail at jmitman@epri.com.

Sincerely,

Mr. Jeffrey T. Mitman
EPRI Project Manager

JM

cc:
Dr. Syed Ali
Mr. Steven Dinsmore
Mr. Stephen Dembek
Mr. Albert Machiels, EPRI
Dr. Larry Nelson, EPRI
Mr. Frank Ammirato, EPRI

D035

add Syed Ali to erids

Recd from S. Ali 12/12/01

EPRI

# Revised Risk-Informed Inservice Inspection Evaluation Procedure

EPRI NDE Center

# Revised Risk-Informed Inservice Inspection Evaluation Procedure (PWRMRP-05)

**TR-112657 Rev. B-A**

Final Report, December 1999

EPRI Project Manager
J. Mitman

EPRI • 3412 Hillview Avenue, Palo Alto, California 94304 • PO Box 10412, Palo Alto, California 94303 • USA
800.313.3774 • 650.855.2121 • askepri@epri.com • www.epri.com

## DISCLAIMER OF WARRANTIES AND LIMITATION OF LIABILITIES

THIS DOCUMENT WAS PREPARED BY THE ORGANIZATION(S) NAMED BELOW AS AN ACCOUNT OF WORK SPONSORED OR COSPONSORED BY THE ELECTRIC POWER RESEARCH INSTITUTE, INC. (EPRI). NEITHER EPRI, ANY MEMBER OF EPRI, ANY COSPONSOR, THE ORGANIZATION(S) BELOW, NOR ANY PERSON ACTING ON BEHALF OF ANY OF THEM:

(A) MAKES ANY WARRANTY OR REPRESENTATION WHATSOEVER, EXPRESS OR IMPLIED, (I) WITH RESPECT TO THE USE OF ANY INFORMATION, APPARATUS, METHOD, PROCESS, OR SIMILAR ITEM DISCLOSED IN THIS DOCUMENT, INCLUDING MERCHANTABILITY AND FITNESS FOR A PARTICULAR PURPOSE, OR (II) THAT SUCH USE DOES NOT INFRINGE ON OR INTERFERE WITH PRIVATELY OWNED RIGHTS, INCLUDING ANY PARTY'S INTELLECTUAL PROPERTY, OR (III) THAT THIS DOCUMENT IS SUITABLE TO ANY PARTICULAR USER'S CIRCUMSTANCE; OR

(B) ASSUMES RESPONSIBILITY FOR ANY DAMAGES OR OTHER LIABILITY WHATSOEVER (INCLUDING ANY CONSEQUENTIAL DAMAGES, EVEN IF EPRI OR ANY EPRI REPRESENTATIVE HAS BEEN ADVISED OF THE POSSIBILITY OF SUCH DAMAGES) RESULTING FROM YOUR SELECTION OR USE OF THIS DOCUMENT OR ANY INFORMATION, APPARATUS, METHOD, PROCESS, OR SIMILAR ITEM DISCLOSED IN THIS DOCUMENT.

ORGANIZATION(S) THAT PREPARED THIS DOCUMENT

**Duke Engineering and Services, Inc.**
**ERIN Engineering and Research, Inc.**
**Inservice Engineering**
**Structural Integrity, Associates**
**EPRI**

## ORDERING INFORMATION

Requests for copies of this report should be directed to the EPRI Distribution Center, 207 Coggins Drive, P.O. Box 23205, Pleasant Hill, CA 94523, (800) 313-3774.

Electric Power Research Institute and EPRI are registered service marks of the Electric Power Research Institute, Inc. EPRI. POWERING PROGRESS is a service mark of the Electric Power Research Institute, Inc.

Copyright © 1999 Electric Power Research Institute, Inc. All rights reserved.

UNITED STATES
**NUCLEAR REGULATORY COMMISSION**
WASHINGTON, D.C. 20555 0001

October 28,1999

Mr. Gary L. Vine, Senior Washington Representative
Electric Power Research Institute
2000 L Street, N.W., Suite 805
Washington, D.C. 20036

SUBJECT: SAFETY EVALUATION REPORT RELATED TO EPRI RISK-INFORMED INSERVICE INSPECTION EVALUATION PROCEDURE (EPRI TR-112657, REVISION B, JULY 1999)

Dear Mr. Vine:

The NRC staff has completed its review of the subject Topical Report which was submitted by the Electric Power Research Institute (EPRI) by letter dated July 29,1999. Enclosed is the staff's safety evaluation report (SER) which discusses the adequacy of the EPRI methodology for developing a risk-informed inservice inspection (RI-ISI) program, and indicates its applicability and implementation at individual plants. The staff has found that this report is acceptable for referencing in licensing applications to the extent specified and under the limitations delineated in the report and the associated NRC safety evaluation.

Current inspection requirements for commercial nuclear power plants are contained in the 1989 Edition of Section XI, Division 1 of the American Society of Mechanical Engineers (ASME) Boiler and Pressure Vessel Code (BPVC), entitled *Rules for Inservice Inspection of Nuclear Power Plant Components.* EPRI TR-112657, Rev. B, provides technical guidance on an alternative for selecting and categorizing the risk significance of piping components for the purpose of developing a RI-ISI program as an alternative to the ASME BPVC Section XI inservice inspection (ISI) requirements for piping. The RI-ISI programs can enhance overall safety by focusing inspections of piping at risk-significant locations and locations where failure mechanisms are likely to be present, and by improving the effectiveness of inspection of components by focusing on personnel qualifications, inspection for cause, and the use of multidiscipline plant review teams. EPRI TR-112657 provides details required to incorporate risk-insights when identifying locations for inservice inspections of piping in accordance with the general guidance provided in Regulatory Guides 1.174 and 1.178.

In developing the methods described in EPRI TR-112657, Rev. B, the industry incorporated insights gained from two plants, Vermont Yankee and Arkansas Nuclear One, Unit 2 (ANO Unit 2) and it now includes full scope as well as partial scope ISI programs. The staff's review of EPRI TR-112657 incorporates information obtained through technical discussions at public meetings and through formal requests for additional information to address the issues related to the analytical methods, application of the methods to the Vermont Yankee and ANO Unit 2 plants, and reviews of RI-ISI applications for these plants.

10 CFR 50.55a(a)(3) provides, in part, that alternatives to the requirements of paragraph (g) may be used, when authorized by the NRC, if (i) the proposed alternatives would provide an acceptable level of quality and safety or (ii) compliance with the specified requirements would result in hardship or unusual difficulty without a compensating increase in the level of quality and safety. The staff concludes that the proposed RI-ISI program as described in EPRI TR-112657, Revision B, is a sound technical approach and will provide an acceptable level of quality and safety pursuant to 10 CFR 50.55a for the proposed alternative to the piping ISI requirements with regard to the number of locations, locations of inspections, and methods of inspection.

The staff will not repeat its review of the matters described in EPRI TR-112657, Rev. B, when the report appears as a reference in license application, except to ensure that the material presented applies to the specific plant involved. In accordance with procedure established in NUREG-0390, the NRC requests that EPRI publish the accepted version of the submittal, within 3 months of receipt of this letter. The accepted version shall incorporate this letter and the enclosed safety evaluation between the title page and the abstract and a "-A" (designating accepted) following the report identification symbol.

If the NRC's criteria or regulations change so that its conclusion that the submittal is acceptable are invalidated, EPRI and/or the applicant referencing the topical report will be expected to revise and resubmit its respective documentation, or submit justification for the continued applicability of the topical report without revision of the respective documentation.

Should you have any questions or wish further clarification, please call me at (301) 415-2795 or Syed Ali at (301) 415-2776.

Sincerely,

William H. Bateman

William H. Bateman, Chief
Materials and Chemical Engineering Branch
Division of Engineering
Office of Nuclear Reactor Regulation

Enclosure: Safety Evaluation

cc w/enc: See next page

Electric Power Research Institute

Project No. 669

Mr. James F. Lang
Electric Power Research Institute
Post Office Box 217097
1300 W.T. Harris Boulevard
Charlotte, NC 28262

Mr. Bindi Chexal
Electric Power Research Institute
Post Office Box 10412
Palo Alto, CA 94303

# SAFETY EVALUATION REPORT
## Related to "Revised Risk-Informed Inservice Inspection Evaluation

## (EPRI TR-112657, Rev. B, July 1999)

## U.S. Nuclear Regulatory Commission

**Office of Nuclear Reactor Regulation**

**October 28, 1999**

## TABLE OF CONTENTS

**ABBREVIATIONS** ..... iii

**1.0 INTRODUCTION** ..... 1

**2.0 SUMMARY OF PROPOSED APPROACH** ..... 2

**3.0 EVALUATION** ..... 2

3.1 Proposed Changes to ISI Programs ..... 3

3.2 Engineering Analysis ..... 4
- 3.2.1 Scope of Program ..... 4
- 3.2.2 Piping Segments ..... 5
- 3.2.3 Piping Failure Potential ..... 6
- 3.2.4 Consequence of Failure ..... 7
- 3.2.5 Consequence Categorization ..... 8
- 3.2.6 Probabilistic Risk Assessment ..... 14
- 3.2.7 Safety Significance Determination ..... 14
- 3.2.8 Change in Risk Resulting From the Change in ISI Programs ..... 15

3.3 Integrated Decisionmaking ..... 17
- 3.3.1 Selection of Examination Locations ..... 18
- 3.3.2 Examination Methods ..... 20

3.4 Implementation and Monitoring ..... 20

3.5 Conformance to Regulatory Guide 1.174 ..... 21

**4.0 CONCLUSIONS** ..... 23

**5.0 REFERENCES** ..... 27

## ABBREVIATIONS

| | |
|---|---|
| ASME | American Society of Mechanical Engineers |
| CCDF | Conditional core damage frequency |
| CCDP | Conditional core damage probability |
| CLERP | Conditional large early release probability |
| FAC | Flow Accelerated Corrosion |
| IGSCC | Intergranular stress corrosion cracking |
| IPE | Individual plant examination |
| ISI | Inservice inspection |
| HSS | High Safety Significant |
| LERF | Large early release frequency |
| LERP | Large early release probability |
| LOCA | Loss of coolant accident |
| PRA | Probabilistic risk assessment |
| PSA | Probabilistic safety assessment |
| RI-ISI | Risk-informed inservice inspection |
| SRP | Standard review plan |

**SAFETY EVALUATION REPORT RELATED TO**
**"REVISED RISK-INFORMED INSERVICE INSPECTION EVALUATION PROCEDURE"**
**(EPRI TR-112657, Rev. B, JULY 1999)**

## 1.0 INTRODUCTION

On April 14, 1999, Electric Power Research Institute (EPRI) submitted its topical report (TR), EPRI TR-112657, "Revised Risk-Informed Inservice Inspection [RI-ISI] Procedure," (Ref. 1) for review and approval by the staff of the U. S. Nuclear Regulatory Commission (NRC). On July 29, 1999, EPRI submitted the revised TR, EPRI TR-112657, Revision B, "Revised Risk-Informed Inservice Inspection [RI-ISI] Procedure," (Ref. 2). EPRI TR-112657, Rev. B, provides technical guidance on an alternative for selecting and categorizing piping components based on their risk significance to develop an RI-ISI program as an alternative to the American Society of Mechanical Engineers Boiler and Pressure Vessel Code (ASME Code) Section XI ISI requirements for piping.

Current inspection requirements for commercial nuclear power plants are contained in the 1989 Edition of Section XI, Division 1, of the ASME Code entitled "Rules for Inservice Inspection of Nuclear Power Plant Components." The RI-ISI programs enhance overall safety (1) by focusing inspections of piping at highly risk significant locations and locations at which failure mechanisms are likely to be present and (2) by improving the effectiveness of inspection of components because the examination methods are based on the postulated failure mode and the configuration of the piping structural element. EPRI TR-112657, Rev. B, provides details required to incorporate risk insights when identifying locations for ISI of piping, in accordance with the general guidance provided in Regulatory Guide (RG) 1.174 (Ref. 3) and RG 1.178 (Ref. 4).

EPRI has asserted that the EPRI methodology for RI-ISI is a detailed implementation document for ASME Code Cases N-560 (Ref. 5) and N-578 (Ref. 6). However, the staff has not evaluated ASME Code Cases N-560 and N-578 to determine their acceptability. Also, the staff has not evaluated EPRI TR-112657, Rev. B, to determine if it is an acceptable document for meeting the intent of ASME Code Cases N-560 and N-578.

In developing the methods described in EPRI TR-112657, Rev. B, the industry incorporated insights gained from two pilot plant studies, Arkansas Nuclear One, Unit 2 (ANO-2) and Vermont Yankee. The staff's review of EPRI TR-112657, Rev. B, incorporates information obtained through technical discussions at public meetings and through formal requests for additional information (Ref. 7) to address the issues related to the analytical methods, observation of the application of the methods to the ANO-2 and Vermont Yankee pilot plants, review of the ANO-2 and Vermont Yankee RI-ISI applications, independent audit calculations, and peer reviews of selected technical issues.

The methodology and procedures in EPRI TR-112657, Rev. B, will be used by licensees to define the scope of a risk-informed piping ISI program. This scope is defined by establishing piping segments, inspection element locations, inspection methods, examination volumes, and acceptance and evaluation criteria. A licensee using this methodology will be expected to incorporate the results of its RI-ISI evaluation into plant-specific program procedures that are

consistent with the performance-based implementation and monitoring strategies specified in RG 1.178 and ASME Code Section XI.

## 2.0 SUMMARY OF PROPOSED APPROACH

The proposed risk-informed methodology would replace the current ASME Code examination requirements for Class 1, 2, and 3 piping. The resulting changes include the number of piping welds examined, their locations, and methods of inspection. ASME Code requirements regarding inspection intervals, acceptance criteria for evaluation of flaws, expansion criteria for flaws discovered, and qualification of inspection techniques and personnel are essentially unchanged, except as identified in EPRI TR-112657, Rev. B, Section 3.6.7, for examinations for localized corrosion. As noted in Section 1.1 of EPRI TR-112657, Rev. B, the proposed methodology is an alternative method of selecting locations for nondestructive examination (NDE). The EPRI RI-ISI methodology is designed to be integrated with existing augmented examination programs for degradation mechanisms such as flow-accelerated corrosion (FAC) (Ref. 8) and intergranular stress-corrosion cracking (IGSCC) (Ref. 9).

In accordance with 10 CFR 50.55a(a)(3)(i), proposed alternatives to regulatory requirements may be used when authorized by the NRC if the applicant demonstrates that the alternative provides an acceptable level of quality and safety. The EPRI RI-ISI method is proposed as an alternative that will (1) identify degradation mechanism(s) that are potentially active, (2) select inspection locations in which the impact of each degradation mechanism is most severe, and (3) implement appropriate inspection methods with qualified inspectors.

The proposed approach is specifically for the NDE of Class 1 and 2 piping welds but also includes Class 3 piping and non-ASME Code class piping found to be highly risk significant in the risk evaluation. As stated by EPRI, all other portions of the ASME Code (i.e., not related to piping) will not be affected by the implementation of the EPRI TR-112657, Rev. B, approach.

The EPRI RI-ISI process includes the following steps:

- scope definition
- consequence evaluation
- degradation mechanism evaluation
- piping segment definition
- risk categorization
- inspection/NDE selection
- risk impact assessment
- implementation, monitoring, and feedback

## 3.0 EVALUATION

For this safety evaluation, the NRC staff reviewed the EPRI RI-ISI methodology, as defined by EPRI TR-112657, Rev. B, with respect to the guidance contained in RG 1.178 and Standard Review Plan (SRP) Chapter 3.9.8 (Ref. 10), which describe the acceptable methodology,

acceptance guidelines, and review process for proposed plant-specific, risk-informed changes to ISI programs for piping components. Further guidance is provided in RG 1.174 and SRP Chapter 19.0 (Ref. 11) which contain general guidance for using probabilistic risk assessments (PRAs) in risk-informed decisionmaking.

### 3.1 Proposed Changes to ISI Programs

A general description of the changes to ISI programs that would result from the proposed methodology is provided in Section 6.2.1 of EPRI TR-112657, Rev. B, which specifies conformance with Section 3 of RG 1.178. Specific pipe systems, segments, and welds, as well as revisions to inspection scope, schedule, locations, and techniques, are plant-specific and, therefore, are not directly included in this evaluation.

Pursuant to 10 CFR 50.55a(g), ASME Code Category B-J and C-F piping welds and Examination Category B-F dissimilar metal welds must receive ISI during successive 120-month (ten-year) intervals. Currently, 25 percent of all Category B-J piping welds of more than 1-inch nominal diameter are selected for volumetric or surface examination, or both, on the basis of existing stress analyses. For Category C-F piping welds, 7.5 percent of non-exempt welds are selected for surface or volumetric examination, or both. Examination Category B-F requires volumetric or surface examination, or both, of all dissimilar metal nozzle-to-piping welds. B-F welds have been included in the scope of the proposed risk-informed analysis at certain plants and may be categorized as being low risk significant if appropriate. The staff concludes that the inclusion of B-F welds in a RI-ISI program is a plant-specific issue and that individual licensees should determine the safety significance of B-F welds and perform examinations commensurate with the associated risk.

Pursuant to 10 CFR 50.55a(a)(3)(i), a licensee planning to use the EPRI methodology will propose an alternative to the ASME Code's examination requirements for piping systems at its plant. As stated in Section 2.2 of EPRI TR-112657, Rev. B, the objectives of the RI-ISI program are to identify risk-significant piping segments, define the locations to be inspected within these segments, and identify appropriate inspection methods. EPRI TR-112657, Rev. B, Section 6.1, states that the EPRI approach is formulated such that no significant risk increases should be expected. For most applications, EPRI expects that strict compliance with its procedure for pipe segment classification, inspection sample selection, and implementation of an inspection-for-cause approach will result in reduction in pipe leak and rupture frequencies. Consequently, EPRI expects reductions in core damage frequency (CDF) and large early release frequency (LERF) if licensees adopt the methodology in EPRI TR-112657, Rev. B.

As stated in EPRI TR-112657, Rev. B, Section 6.5, and discussed in the public meeting with EPRI on March 2, 1999 (Ref. 12), no changes to the augmented inspection programs for FAC or for IGSCC Category B through G welds for boiling-water reactors (BWRs) are being made in the proposed RI-ISI program. The EPRI RI-ISI program would supersede augmented inspection programs for Category A welds for IGSCC for BWRs, IGSCC in pressurized water reactors (PWRs) (Ref. 13), microbiologically influenced corrosion (MIC) (Ref. 14), and thermal fatigue (Ref. 15).

## 3.2 Engineering Analysis

According to the guidelines in RGs 1.174 and 1.178, licensees proposing an RI-ISI program should perform an analysis of the proposed changes using a combination of engineering analysis with supporting insights from a PRA. For the RI-ISI program, engineering analysis includes determining the scope of piping systems included in the RI-ISI program, establishing the methodology for defining piping segments, evaluating the failure potential of each segment, and determining the consequences of failure of piping segments. The deterministic and probabilistic analyses that are performed to evaluate the proposed changes to the ISI program are summarized in Section 6.2.2 of EPRI TR-112657, Rev. B.

The process to ensure that the RI-ISI program does not deviate from the licensing bases pertaining to piping structural integrity are addressed in Section 5.3 of EPRI TR-112657, Rev. B. The EPRI TR states that the only codes and standards that will be affected by implementation of the EPRI RI-ISI method will be the ISI requirements of ASME Code Section XI. Existing safety analyses are not expected to be affected by implementation of RI-ISI.

In Section 6.1 of EPRI TR-112657, Rev. B, EPRI describes the basis for conformance with the key principles of RG 1.174 to ensure that the proposed change meets the current regulations, is consistent with defense-in-depth philosophy, maintains sufficient safety margins, provides reasonable assurance that risk increases (if any) resulting from the proposed change should be small and consistent with the intent of the Commission's Safety Goal Policy Statement, and is monitored using performance-based strategies. Details of the engineering analysis of the risk-based evaluations are discussed in the following sections.

### 3.2.1 Scope of Program

In accordance with the guidelines in Section 1.3 of RG 1.178, the staff has determined, as set forth below, that full-scope and partial-scope options are acceptable for RI-ISI programs for piping. The full-scope option includes ASME Code Class 1, 2, and 3 piping, piping whose failure could prevent safety-related structures, systems, or components (SSCs) from fulfilling their safety functions, and non-safety-related piping that is relied upon to mitigate accidents or whose failure could cause a reactor scram or actuation of a safety-related system.

As described in Sections 1.3, 3.1, and 3.2 of the EPRI TR, the EPRI methodology should be applicable whether the scope of piping to be evaluated in the RI-ISI program includes a single system, selected systems, or all plant systems. The methodology refers to ASME Code Case N-560 for a scope covering B-J welds in Class 1 piping systems, and to ASME Code Case N-578 for alternative scopes (other piping classes or individual piping systems) up to, and including, full plant evaluations. Therefore, both "partial-scope" or "full-scope" applications of the methodology are anticipated. Section 3.7.2 of the EPRI TR provides system-level decision guidelines for change in CDF of 1E-7/yr and for change in LERF of 1E-8/yr. These changes in frequency are an order of magnitude less than those regarded as "very small" in RG 1.174. The EPRI TR states that system-level decision guidelines should be applied to each system regardless of the scope of the application. If a Class 1 only evaluation is being performed, the

EPRI Topical states that, for the purpose of the risk impact assessment only, the Class 1 piping may be treated as a single system.

Treatment of the RI-ISI inspection strategy for existing augmented and other inspection program activities is described in Sections 2.4, 3.6.4.1, 3.6.4.2, 3.6.5, and 6.5 of the EPRI TR. In these discussions, EPRI describes the role of inspection programs outside the scope of Section XI that will be integrated with the RI-ISI program as noted by the following statements:

- The RI-ISI program would include Category A welds that were formerly a part of the IGSCC program for BWRs; all others welds (category B-G) will still be inspected in accordance with the plant program under Generic Letter (GL) 88-01 and NUREG-0313 guidance.

- The RI-ISI program would replace augmented programs for thermal fatigue (NRC Bulletins 88-08 and 88-11, Information Notice 93-020), and for IGSCC concerns for PWRs (NRC Bulletin 79-17).

- The plant's existing FAC program in response to GL 89-08 would not be affected by the RI-ISI.

- Section 3.6.7 of the EPRI TR provides utilities with an alternative for localized corrosion (MIC, pitting) examinations currently performed as specified in GL 89-13.

The staff finds acceptable the discussion of scope since it is consistent with guidance provided in RG 1.178 and SRP Chapter 3.9.8. The staff finds that conformance to the system-level guidelines provides reasonable assurance that the risk from individual system failures will be kept small and dominant risk contributors will not be created. Conformance with the system-level guidelines also provides assurance that the aggregate impact of possible further application of RI-ISI at any plant would not be expected to exceed the aggregate risk change guidelines in RG 1.174. Class 1 piping is composed of parts of a variety of systems. The staff finds that applications including all reactor coolant pressure boundary (RCPB) piping may treat this Class 1 piping as one system because the RCPB is defined in 10 CFR 50.2 and is equivalent to a "system" insofar as it performs a well-defined function and is composed of a fixed set of equipment.

### 3.2.2 Piping Segments

Section 3.5.1 of EPRI TR-112657, Rev. B, provides the definition for pipe segments. Pipe segments are defined as lengths of pipe that are exposed to the same degradation mechanism and whose failure leads to the same consequence. That is, some lengths of pipe whose failure would lead to the same consequences are split into two or more segments when two or more regions are exposed to different degradation mechanisms. Similarly, lengths of pipe exposed to the same degradation mechanism whose failure would lead to different consequences are split into two or more segments. The EPRI TR also states that segments must be located in the same area of the plant. EPRI stated that the area criteria are used to simplify recordkeeping and review and do not affect the consequence and risk-ranking results.

Section 3.3.1 of EPRI TR-112657, Rev. B, discusses the possibility of isolating a break. In defining pipe segment boundaries and associated consequences for the segments, check valves and automatic isolation valves are generally assumed to close if the pipe failure creates the signal or demand for the valve to close. The staff notes that this assumption will not have a significant impact on the results since the probability of a valve's failing to close is small and the consequences from failure will not change appreciably in most instances. In some cases, however, the equipment and functions lost as a result of a pipe rupture can vary greatly if an automatic isolation succeeds or fails. Failure of containment isolation valves, in particular, can create an unisolable loss-of-coolant accident (LOCA) outside containment and require special consideration. Containment isolation valve failures are discussed further in Section 3.2.5.3 of this safety evaluation report (SER).

The staff finds that the consequence-related definition of piping segments in EPRI TR-112657, Rev. B, is acceptable because the definition is consistent with the expectations expressed in Section 4.1.4 of RG 1.178, which states that one acceptable approach to dividing piping systems into segments is to identify segments as portions of piping having the same consequences of failure in terms of an initiating event, loss of a particular train, loss of a system, or a combination thereof. The staff finds that the EPRI TR's further differentiation of segments according to degradation mechanisms is appropriate, and necessary, because the methodology combines separate consequence categories with degradation mechanism categories in the risk matrix and, therefore, the two characteristics should not be mixed within a segment.

### 3.2.3 Piping Failure Potential

The purpose of the piping failure potential estimation is to differentiate among the piping segments on the basis of the potential failure mechanism and the postulated consequences. The relative failure potential of piping segments provides insights for defining the scope of inspection for the RI-ISI program. Determination of piping failure potential is discussed in Section 3.4 of EPRI TR-112657, Rev. B. The basis for this assessment includes evaluating the degradation mechanisms for each pipe segment using the attributes and evaluation criteria presented in that section of the TR, followed by categorizing the potential for a large pipe failure according to the degradation category. Table 3-14 of EPRI TR-112657, Rev. B, provides guidance and criteria for assessing the degradation mechanism. In the EPRI methodology, although the consequences of piping failures are evaluated assuming a large break, the pipe break failure potential rankings are based upon specific degradation mechanisms to which the pipe segment is postulated to be susceptible. Only a pipe segment that is susceptible to FAC receives a high pipe failure potential, unless that segment is susceptible to a degradation mechanism other than FAC and also has the potential for water hammer.

EPRI TR-112657, Rev. B, describes how insights from service experience formed the technical basis for the pipe failure degradation categories. EPRI analyses of piping service experience have been performed relating to recent developments in the area of piping service data and reliability assessment techniques, and further insights from those studies have been documented in Section 2.2.2 of the EPRI TR. As noted in Section 3.4.2.2 of EPRI TR-112657, Rev. B, plant service history as well as industry experience (Ref. 16) are important considerations in the EPRI methodology for evaluating degradation mechanisms to ensure

completeness and to validate the existence of any identified mechanisms. Actual operating experience at the plant performing the evaluation is used to define the portion of the pipe segments (elements) in which the potential degradation mechanism has been identified. The ultimate determination of the potential degradation mechanism for a specific piping segment is primarily based on actual operating conditions at the plant.

The EPRI risk matrix is based on the premise that, in light of uncertainties associated with any attempt to quantify risk levels associated with passive components, it is appropriate to place pipe segments into broad categories of pipe rupture potential and consequence. That is, the method should lead to consistent rankings of pipe segments since these categories include conservative, broad ranges that should ensure reproducible results between various analysts.

The staff expects that an in-depth review of plant and industry databases and plant documents will be required to characterize each plant's operating experience with respect to piping degradation. Plant service experience provides confirmation of appropriate assignment of damage mechanisms to piping segments. This information is also utilized in the element selection process.

The EPRI methodology does not advocate using an "Expert Panel" for final element selection. Instead, the final element selection is subject to a detailed multidiscipline plant review, in accordance with the criteria discussed in EPRI TR-112657, Rev. B, Sections 3.6.5.1 and 3.6.5.2.

In view of the foregoing, the staff finds that the EPRI methodology meets the RG 1.178 guidance for ensuring that a systematic process is used to identify pipe segments susceptible to common degradation mechanisms and for categorizing these mechanisms into the appropriate degradation categories with respect to their potential to result in a postulated large pipe break.

### 3.2.4 Consequence of Failure

The consequences of the postulated pipe segment failures are considered primarily in Section 3.3 of the EPRI TR, and include direct and indirect effects of the failure. Direct effects include the loss of a train or system and associated possible diversion of flow or an initiating event such as a LOCA, or both. Indirect effects include the spatial effects of flood, spray, pipe whip, or jet impingement that may affect adjacent SSCs or depletion of a water source and loss of associated systems. The piping failure break sizes considered range from a small leak to a full rupture, as discussed in Section 3.3.1 of EPRI TR-112657, Rev. B. The most limiting consequence from the spectrum of break sizes considered is used to assign a consequence rank to that pipe segment.

Several plant level consequences can result from the postulated pipe rupture. EPRI TR-112657, Rev. B, identifies the following effects of pipe rupture on the operation of the plant.

1. Initiating events: Segment failures that cause only an initiating event and no mitigating system failures.

2. Loss of mitigating ability: Segment failures that only cause failure of mitigating functions but do not cause a plant trip, thereby increasing the likelihood that following an unrelated initiating event, the sequence of events will lead to a core damage event. In some cases (for example, normally isolated segments), the segment failure may occur before the event but only become manifested upon demand. In other cases, the failure may be detected and repair initiated (up to the allowed outage time limits of the equipment), and the initiating event may occur during the repair.

3. Combinations: Segment failures that cause both an initiating event and a failure of mitigating systems.

The staff finds that the EPRI TR properly identifies equipment consequences and the plant-level consequences because it covers the range of possible consequences and is consistent with the guidelines in SRP 3.9.8 and RG 1.178.

EPRI TR-112657, Rev. B, does not include a detailed discussion of the specific assumptions to be used to guide the assessment of the direct and indirect effects of segment failures. For example, although diversion of flow is included as a direct effect, there is no guidance for determining whether a flow diversion would be sufficiently large to cause a system to fail to perform its function. Similarly, EPRI TR-112657, Rev. B, does not provide clear guidance for calculating flooding effects with regard to the required modeling of flood propagation pathways, modeling of flood growth and mitigation, and assumptions for the failure of critical equipment within a flood zone (e.g., if electro-mechanical components must be submerged before failure, etc.). The staff finds that specific assumptions regarding the direct and indirect effects of pipe segment failure should be developed by the individual licensees and should form part of the onsite documentation. Chapter 5 of the EPRI TR requires that details from the consequence evaluation be maintained on site for potential audit.

### 3.2.5 Consequence Categorization

The methodology requires that the consequence of each piping segment failure be placed into one of four categories: High, Medium, Low, and None. The None category would cause none of the effects discussed in Section 3.2.4 of this SER. The other categories are based on a set of decision criteria discussed in Section 3.2.5.1 of this SER.

EPRI TR-112657, Rev. B, uses the terminology "conditional" core damage probability (CCDP) and "conditional" large early release probability (CLERP) to describe the quantities used to characterize the risk due to segment ruptures that do not cause an initiating event but only cause the failure of mitigating systems. The staff believes that for this type of plant level consequence the desired quantity is not the conditional core damage probability given the segment ruptures, but rather the increase or change in probability of core damage that would be caused by the segment rupture. As illustrated by Equation 3-3 and by the equations in Sections 3.3.3.5.2 and 3.3.3.5.3 of EPRI TR-112657, Rev. B, to calculate CCDP, the baseline CDF estimate (e.g., the result of the PRA which does not include the effect of the segment rupture in the model) is subtracted from the CDF estimate that includes the effect of the segment rupture. The result is multiplied by the exposure time (e.g., a period of time in which an unrelated

transient could occur) to characterize the increase in probability of core damage or large early release associated with the rupture of the segment. Although the terminology would be more descriptive if "change" was used instead of "conditional," the staff finds that the quantitative measure described by Equation 3-3 of EPRI TR-112657, Rev. B, is an acceptable measure because it appropriately isolates the contribution of the rupture of the segment on plant risk from scenarios that are not affected by the rupture. Segment ruptures which cause a reactor trip do contribute to all scenarios initiated by the trip and therefore no baseline contribution needs to be subtracted.

The CCDP and the CLERP for each segment's failure can be estimated and compared directly to the decision criteria. The methodology provides an alternative methodology based on bounding evaluations as discussed in Sections 3.2.5.2 and 3.2.5.3 of this SER. Estimating the CCDP and CLERP and comparing the results to the criteria are straightforward, and most of the EPRI TR-112657, Rev. B, consequence evaluation discussions describe how to apply the bounding methodology.

The consequence evaluation is defined assuming at-power operation since this plant configuration is considered more critical in evaluating the risk from pressure boundary failures. The EPRI methodology also provides guidance for evaluating the risk from pressure boundary failures for other modes of operation and external events in EPRI TR-112657, Rev. B, Sections 3.3.4 and 3.3.5 respectively. In the EPRI TR, pipe segment failures classified as Medium and Low consequence are evaluated to determine their potential impact during shutdown operation and while responding to external events. This evaluation is performed considering the potential of the segment to fail and cause an initiating event and its potential to fail while responding to another initiating event. The staff finds that the EPRI methodology provides for evaluating plant configurations to ensure that pipe segment failures (that are not already classified in the High consequence category) do not have a more limiting consequence impact for modes other than at power and for external events, and is, therefore, acceptable..

### 3.2.5.1 Consequence Categorization Criteria

The methodology to assign segment failures to consequence categories is based on the number of unaffected trains available to mitigate an event. The specific decision criteria used to determine the consequence category depends on the type of impact the segment failure has on the plant and the reliability[1] of the unaffected trains. In general, however, the criteria are derived from guidelines applied to the CCDP and the CLERP, given the segment failure. That is, given a segment failure and all the associated spatial effects, the CCDP is the probability that the resulting scenario will lead to core damage. If the failure of a segment is estimated to lead to a core damage event with a probability greater than 1E-4, the segment is categorized as High consequence. An estimated CCDP within the range of 1E-6 to 1E-4 is categorized as Medium consequence. CCDPs less than 1E-6 are categorized as Low consequence. Similarly, if the failure of a segment is estimated to lead to a large early release event with a probability greater

1. The reliability of a train is the probability that it will perform its required function in the desired manner under all relevant conditions and on the occasions or during the time intervals when it is required to so perform.

than 1E-5, the segment is categorized as High consequence. An estimated CLERP within the range of 1E-7 to 1E-5 is categorized as Medium consequence. CLERP less than 1E-7 is categorized as Low consequence. If the CCDP and CLERP categories are different, the segment is assigned the higher of the two categories.

As discussed in Section 3.3.2 of TR-112657, Rev. B, the above consequence guidelines were developed together with the bounding pipe failure frequencies, which are related to estimated weld failure frequencies. The consequence and the frequency together represent the risk of each segment and is an appropriate metric to use to characterize guidelines used in a risk-informed application. EPRI estimates that the total frequency of a pipe break at a plant is on the order of 1E-2/yr. The EPRI TR states that the boundaries between the High and Medium consequence categories, at CCDP and CLERP values of 1E-4 and 1E-5 respectively, are set to correspond with the definitions of small CDF and LERF values of 1E-6/yr (e.g., 1E-2/yr times 1E-4 CCDP) and 1E-7/yr (e.g., 1E-2/yr times 1E-5 CLERP). The EPRI TR states that the assumption that 1E-6 and 1E-7 per year represent suitable small CDF and LERF values is consistent with the decision criteria for acceptable changes in CDF and LERF found in RG 1.174. Experience in the pilot plant applications indicate that, in practice, events normally considered highly risk significant (insofar as extensive regulatory attention is given to preventing the scenario and ensuring that mitigating functions are available), such as LOCAs and loss of multiple equipment trains, are placed in the High consequence category with these guidelines. The staff finds the CCDP criteria for the High consequence category acceptable because they provide reasonable assurance that the methodology will systematically and successfully identify the population of the highly risk significant welds within the scope of the analysis.

The CCDP criteria selected to guide placing of piping failures in the Low consequence category were selected in order to ensure that the aggregate risk from welds in these piping is so low as to be considered risk insignificant. The maximum CDF allowed to be placed in the Low consequence category can be calculated from the highest bounding weld failure frequency (1E-4/yr) and the highest allowable Low CCDP (1E-6) as 1E-10/yr. That is, only welds for which CDF is less than 1E-10/yr will be placed in the Low consequence category. The EPRI TR states that the Low CCDP guideline is reasonable because the low category represents negligible contributions to CDF. The staff notes that even if hundreds of welds are placed in Low risk categories, the aggregate impact of around 1E-8/yr can indeed be characterized as low risk and, consequently, finds this guideline acceptable. The use of the Medium risk category to capture all welds that are not High or Low, and the consequent application of an intermediate number of inspection locations to these welds can adequately address the uncertainty in the evaluations and is also acceptable. The None category is only used for welds whose failure has no impact on either the operation of the plant or the operability of mitigating systems.

The evaluation of changes in CDF and LERF in the final phase of the methodology provides additional assurance that aggregate change in risk for changes in the ISI program will be acceptable. In view of the above, the staff finds that these guidelines are consistent with the intent of RG 1.174 and, when used in the methodology as described in EPRI TR-112657, Rev. B, provide reasonable assurance that risk increases (if any) resulting from a proposed change should be small and consistent with the intent of the Commission's Safety Goal Policy Statement.

3.2.5.2 Core Damage Consequence Categorization Process

EPRI TR-112657, Rev. B, provides guidance on assigning CCDP consequence categories to segment failures on the basis of the number of available (i.e., unaffected by the rupture) mitigating trains remaining, broad categories of initiating event frequencies, and exposure times. These trains may be parallel system trains or other systems that provide a backup function to the unavailable system and that are unaffected by the direct and indirect consequences of the segment rupture. The identification and development of the systems and backup systems available to respond to different initiating events are described in Section 3.3.3.2.2 of EPRI TR-112657, Rev. B.

After the EPRI TR identifies all the systems available to perform each function, it provides two tables which relate the number of backup trains to the CCDP and CLERP guidelines, respectively. The selection of the table to be used depends on the plant-level impact of the failure. The tables are based on the assumption that each unaffected backup train left to mitigate an event has an unreliability of 0.01. Assuming that each backup train provides a reliability of at least 0.99, then if the CCDP associated with a table element is greater than 1E-4 the consequence category is high; if CCDP is between 1E-4 and 1E-6, the consequence category is Medium; and if CCDP is less than or equal to 1E-6, the category is Low. Because of potential interactions between the system trains and between different systems, a physical train cannot always be credited as a full backup train. That is, two parallel pump trains may have an estimated unreliability to provide flow from at least one pump of 8E-4. Two trains with an unreliability of 0.01 each, would have, at most, an unreliability of 1E-4. Therefore, these two physical trains would then represent 1.5 backup trains (i.e., with an unreliability of about 1E-3).

The following decision criteria are used to support the CCDP related categorization of each type of segment failure consequence defined above in Section 3.2.4.

1. Initiating Event: EPRI TR-112657, Rev. B, states that "consequence categories for pressure boundaries failures leading [only] to an initiating event are explicitly determined from the plant PSA/IPE [probabilistic safety analysis/individual plant examination] results, based on the numerical guidelines . . ." for the CCDP.

2. Loss of Mitigating Ability: EPRI TR-112657, Rev. B, Table 3-5, specifies consequence categories based on categories of initiating events which, in turn, are based on expected frequencies, the number of equivalent backup trains left to mitigate the event, and exposure time. The consequence category for each table entry was developed by estimating a CCDP and comparing that value to the CCDP guidelines. Table 3-6A in EPRI TR-112657, Rev. B, provides estimates of the CCDP for each table entry on the basis of the upper bound exposure time, the lower bound train reliability, and a best estimate challenge frequency. The CCDPs in this table are compared to the guideline values, and the appropriate consequence category is assigned as shown in Table 3-5. Table 3.6B is similar to Table 3.6A except the upper bound challenge frequency is used instead of the best estimate challenge frequency. The staff recognizes that elements in Table 3.6B with upper bound CCDPs up to 3E-4 are categorized as Medium (not High) and others as high as 3E-6 are categorized as Low (not Medium). The staff finds that the product of two bounding values

and a best estimate is sufficiently conservative and, therefore, the categories, as determined by Table 3.6A, are reasonable.

3. Combinations: EPRI TR-112657, Rev. B, Table 3-11, specifies consequence categories on the basis of the number of equivalent unaffected trains available for mitigation. The consequence category for these matrix entries was developed by estimating a CCDP assuming the bounding unreliability of 0.01 for each backup train and comparing the result to the CCDP guidelines.

The staff finds the definition and use of the methodology and the tables acceptable because the table elements are derived from bounding values, and because the methodology directs each licensee to perform confirmatory calculations to provide reasonable assurance that each assigned backup train corresponds to at least the reliability of 0.99 or to adjust the credit for each "train" accordingly. If a licensee believes that the table elements derived from bounding values are too conservative for one or more pipe segments, the licensee may perform plant- and sequence-specific calculations and use the CCDP guidelines directly.

3.2.5.3 Large Early Release Consequence Categorization Process

EPRI TR-112657, Rev. B, provides guidance for the consequence categorization of pipe segment failures by determining if the CCDP, coupled with the conditional containment failure probability (CCFP), indicates that the consequence category based on the LERP guidelines is higher than that based on CCDP guidelines. The CLERP guidelines are a factor of 10 smaller than the CCDP guidelines. If the CCFP is less than 0.1 (given a core damage event) the CLERP consequence category would be less than or equal to the CCDP consequence category. Three types of containment failure are considered:

1. Some segment ruptures may cause failure of the containment isolation function. Tables 3-5 and 3-11 in EPRI TR-112657, Rev. B, identify the specific table entries that should be placed in the next higher consequence category when containment isolation also fails. These table entries would have a higher CLERP consequence category than the CCDP category because the CLERP guidelines are a factor of 10 lower than the CCDP guidelines.

2. Some segment ruptures may lead to core damage sequences that create conditions in the containment that increase the CCFP above 0.1, given a core damage event. EPRI TR-112657, Rev. B, specifies that sequences that have CCDPs between 1E-4 and 1E-5 be evaluated to determine if a CCFP of greater than 0.1 is expected. If so, the CLERP category should be determined and the segment placed in the higher of the two categories. Similarly, sequences that have CCDPs between 1E-6 and 1E-7 should be evaluated to determine if the segment has a higher CLERP category than the CCDP category. Experience with the pilot applications indicates that only a few specific types of core damage sequences (for example, those involving a total loss of service water and thus loss of all containment cooling) lead to CCFPs greater than 0.1.

3. Some segment ruptures may directly, or in combination with isolation valve failures, create a LOCA outside containment. The entries in Table 3-12 in EPRI TR-112657, Rev. B, identify the consequence category, given the number of passive and active isolation valves that have

to fail in combination with a segment rupture in order to create a LOCA outside containment. Experience with the pilot plant applications indicates that common-cause failures among series isolation valves that must close on demand can yield double valve failure probabilities greater than 1E-5 so that the consequence category should be High instead of Medium as indicated in the table. The EPRI TR directs the licensee to evaluate the plant specific isolation valve unavailabilities (and the probability of core damage given a LOCA outside containment, if the unavailabilities alone are not sufficiently small) to confirm that the categories in Table 3-12 are appropriate.

The staff finds the definition and use of the methodology and tables acceptable because the evaluation includes the dominant containment failure modes contributing to LERF and can identify those segments that would exceed the CLERP criteria.

### 3.2.5.4 Human Actions To Isolate Breaks

In some cases, the operators can isolate a break and regain a system train or function(usually by closing a diversionary flow path). In order to use the supplied tables on the basis of the number of available "trains," it is necessary to represent the potential for the operators to isolate a break and recover mitigating capability within the backup train framework. In general, if successful operator action to isolate the break would recover one or more mitigating trains, the potential for isolation is credited as one backup train. If isolation is possible, the consequences should be analyzed by determining the number of backup trains that would be available without successful isolation, and adding one more train of mitigating capacity. Crediting one more mitigating train than is available reduces the CCDP by a factor of 0.01, and is equivalent to incorporating the probability of the failure of the operator to perform the isolation into the determination of the consequence category. The consequences are next analyzed by determining the number of backup trains that would be available assuming that the isolation was successfully performed (e.g., crediting all mitigating capability that would be available after a successful isolation of the break). The worst of the two consequence categories should be selected.

This methodology requires that the recovered train can be used to mitigate the sequence (recovery of one train of emergency feedwater following a large LOCA in a PWR would not provide useful mitigating capacity) and that the recovered train is "worth" about a train (recovery of a reactor core isolation cooling system with an unreliability of 0.1 should not be credited as a full mitigating train or 0.01). When crediting the recovered train of mitigating capacity as available, the recovered backup train might fail to operate, so isolation and backup failures should be added. That is, failure to isolate or failure of the mitigating train given successful isolation should, for example, be 0.02, but this difference is negligible within the bounding values used in this methodology.

In support of the 0.01 probability of failure for the human actions, EPRI TR-112657, Rev. B, recommends that human actions only be credited when (1) there is an alarm or clear indication, to which the operator will respond; (2) the response is directed by a procedure; (3) the isolation equipment (e.g., the valves) is not affected by the break; and (4) there is enough time to perform

isolation and reduce consequences. In some specific scenarios, credit for fewer or more trains may be taken, corresponding to the evaluated magnitude of the human error probabilities.

The staff finds that crediting isolation potential as described in the submittal is acceptable because it provides for including isolation (which has a substantial impact on the consequences of pipe rupture), and the impact of not adding the recovered train's failure probability to the operator error probability is negligible when compared to the order of magnitude analyses upon which the methodology is based.

### 3.2.6 Probabilistic Risk Assessment

This section deals with determining the overall quality of a PRA that supports the RI-ISI evaluation process, and the use of a PRA to investigate the impact on change in risk because of a change from the ASME Code to the RI-ISI program. The scope, level of detail, and quality of a PRA and the general methodology for using PRA in regulatory applications is discussed in RG 1.174. RG 1.178 provides guidance that is more specific to ISI. The EPRI methodology does not prescribe the incorporation of pipe segment failure events into the PRA model. Specific uses of plant-specific PRA results are discussed throughout the EPRI report and this SER. Section 3.3.6 of EPRI TR-112657, Rev. B, summarizes the use of the plant-specific PRA.

The staff finds that the use of PRA results as described in EPRI TR-112657, Rev. B, is acceptable to support the EPRI ISI methodology based on the following reasons: (1) The PRA results characterize the specific attributes at the plant in a manner that can support and confirm the basic assumptions of the general methodology; and (2) the methodology includes systematic consideration of initiating events and operating states outside the scope of the licensee's PRA such as external events and refueling operation. The staff recognizes that plant-specific PRA results are used to support placing pipe segments into broad risk-significant categories and to support risk evaluations in order to investigate the potential change in risk as a result of the proposed change in the ISI program. The staff notes that in support of all risk-informed applications, the licensee is responsible for developing, and retaining on site for potential NRC audit, justification that the PRA is of sufficient quality and that there is reasonable assurance that the general results and conclusions of the proposed program change are valid.

### 3.2.7 Safety-Significance Determination

The EPRI TR uses "risk-significance" as opposed to the term "safety-significance" generally used by the NRC staff. The safety significance of pipe segments is addressed in Section 3.5 of EPRI TR-112657, Rev. B, entitled "Risk Characterization." The safety significance of an individual pipe segment is based on categorizing the consequence of segment failure as High, Medium, Low, or None; and categorizing the failure potential of the piping as High, Medium, or Low. As described in Section 3.5.2, once the individual elements of risk (consequence and failure potential) have been defined for each pipe segment, they are compared to a risk matrix in which the 12 elements are grouped into 7 risk categories corresponding to all of the various combinations of failure potential and consequence rankings.

In EPRI TR-112657, Rev. B, Section 3.5.3, these combinations define the basis for categorizing the pipe segments into Risk Categories 1 through 7. Risk Categories 1, 2, and 3 are designated as belonging to the High-risk group, Risk Categories 4 and 5 belong to the Medium-risk group, and Risk Categories 6 and 7 belong to the Low-risk group. The Medium-risk group ensures that segments that are not clearly High- or Low-risk will receive an intermediate level of inspection.

The staff finds that the assignment of the safety significance to the 12 matrix elements as detailed in EPRI TR-112657, Rev. B, is internally consistent and logically compelling. The staff finds that the process of categorization of pipe segments meets the intent of the integrated decisionmaking process guidelines discussed in RGs 1.174 and 1.178, in that engineering and risk insights (both qualitative and quantitative) are taken into consideration in identifying safety-significant piping segments. The staff finds that the use of the reported categories, along with other evaluation and confirmation steps set forth in this SER provides reasonable assurance that the safety significance of each segment is appropriately assigned.

### 3.2.8 Change in Risk Resulting From the Change in ISI Programs

RG 1.178 provides that any risk increases that might result from the proposed RI-ISI program and their cumulative effects be small and not exceed NRC safety goals. The EPRI method does not develop the number of locations to be inspected on the basis of quantitative risk results. Instead, the method categorizes the risk significance of the piping segments and then specifies the percentage of the welds to be inspected in each of the various categories as discussed in Section 3.3.1 of this SER. The change in risk evaluation in the EPRI method is a final screening to ensure that a licensee wishing to replace a Section XI inspection program with a risk-informed inspection program investigates the potential change in risk resulting from that change and implements it only upon determining with reasonable confidence that it is acceptable.

EPRI TR-112657, Rev. B, discusses four screening evaluations that are, in order of increasing resource requirements, as follows: qualitative, bounding without credit for any increase in probability of detection (POD), bounding with credit for increase in POD, and a Markov model based calculation. Each licensee may select any of the screening evaluations, although it is anticipated that each licensee will start with the qualitative evaluation and move to more resource-intensive estimation techniques until the results indicate that the risk impact of the proposed change is acceptable, or until additional inspections are added to make the impact acceptable.

The screening evaluations investigate the change in risk because of the change in the number and location of ISI inspections. All four screening evaluations include the assumption that there is a negligible risk increase because of the discontinuation of inspections of piping segments in the Low-risk categories (Categories 6 and 7). Section 3.7.1 of EPRI TR-112657, Rev. B, provides a bounding evaluation indicating that with weld rupture frequencies and CCDPs all at their maximum values for Low-risk categories, CDF increases on the order of 1E-10/yr to 1E-12/yr per weld are calculated (LERF 1E-11/yr to 1E-13/yr). A similar bounding estimate for the Medium-risk categories yields change in risk estimates two orders of magnitude greater (corresponding to a maximum CCDP/LERP that is two orders of magnitude greater than the Low consequence bounding estimate). Changes to High-risk categories use a plant-specific

bounding value that experience from the pilot plants indicates will normally be another order of magnitude greater than the Medium bounding estimates. The staff finds that changes in the Low category need not be evaluated because the change in risk from changes in the High- and Medium-risk welds will dominate the results.

In general, application of the methodology tends to increase the number of inspection locations in higher risk pipe segments and decrease the number of inspections in lower risk pipe segments. In some cases, each High- or Medium-risk category has an increased number of locations selected for inspection, or a comparable number of locations are redirected to locations that are more likely to identify failure precursors on the basis of characteristics of the identified damage mechanisms. The staff finds that for some proposed inspection program changes, such as the change discussed above, a clear and straightforward qualitative risk evaluation is sufficient.

For more extensive changes in the number of inspections in the High- and Medium-risk category welds, a quantitative estimate of the change in risk should be developed. The EPRI TR includes a flowchart in Figure 3-6 that outlines the decision criteria for evaluating RI-ISI impacts on CDF and LERF. The staff finds that this flowchart contains the appropriate steps in the correct sequence to guide the estimation of risk process and to determine what level of effort is required on the basis of the specific results of each licensee's evaluation. The bounding calculation methodology using both no POD increase and a POD increase was reviewed by the staff during the pilot applications and found to be acceptable for investigating the change in risk associated with changing the number and the locations of welds to be inspected as part of an RI-ISI application that uses the EPRI methodology.

EPRI TR-112657, Rev. B, also discusses a Markov process model for the weld rupture and inspection process and a Bayesian estimation (updating) process for use in estimating the required occurrence rates corresponding to the failure states in the Markov model. Technical reviews of the Markov model have been performed by the staff, a staff contractor (Ref. 17), and by independent peer reviewers for EPRI. These efforts provided a detailed review of the model and its ability to support the proposed licensing application. The conclusion of the reviews is that the proposed four-state Markov model as described in EPRI-TR-110161 is both sound and appropriate as a first-order model of pipe rupture. The staff adopts the analysis of the Markov model and the Bayesian updating set forth in the contractor report (Ref. 17). The contractor report is available in the Commission's Public Document Room, which is located in the Gelman Building at 212 L St, N.W., Washington, D.C., 20003, under accession number 9909300045. Based on that analysis, the staff finds that the model can be used as a basis for the estimation of pipe rupture frequencies to be used instead of the bounding pipe failure frequencies in support of the change in risk estimates as part of an application that uses the EPRI RI-ISI methodology.

The Bayesian estimation (updating) process updates "state of knowledge" prior distributions with industry-wide experience data and does not further use plant-specific experience to develop plant-specific posteriors. The staff finds this approach acceptable because very little plant-specific pipe failure experience is available. Individual applicants are, however, responsible for ensuring that the operating and design characteristics assumed for estimating the state transition rates for their reactor type and system types are appropriate and that the applicable

industry operating experience failures were appropriately evaluated and categorized. The staff may review these calculations or the results of the licensee's review to determine the acceptability of the data analysis and the data used on a case-by-case basis.

The delta CDF/LERF calculations illustrate the potential change in risk rather than precisely estimating the magnitude of the change. It is expected that implementation of the RI-ISI program should be risk neutral, a decrease in risk, or, at most, an insignificant increase in risk. EPRI TR-112657, Rev. B, provides guidance on an acceptable risk change of 1E-7/yr for CDF and 1E-8/yr for LERF for each system included in the application (regardless of the number of systems) and a total change less than the "very small" guidelines of 1E-6/yr for CDF and 1E-7/yr for LERF in RG 1.174. As discussed in Section 3.2.1 of this SER, when the scope of the application encompasses all ASME Code Class 1 welds, the system-level criteria may be applied to the total change instead of to each system and system part included in the analysis. The values are intended to ensure that after applying these values to multiple systems, the total plant-level changes in CDF and LERF remains below the guidelines in RG 1.174. The staff finds that this use of system-level guidelines in addition to the plant level guidelines is acceptable, as their use will ensure that the risk from individual system failures will be kept small and dominant risk contributors will not be created. Furthermore, the staff finds that these system-level guidelines are necessary in order to provide reasonable assurance that partial-scope applications will, individually and cumulatively, remain below the guidelines in RG 1.174.

EPRI's process for evaluating and bounding the potential change in risk is reasonable since it accounts for the change in the number and location of elements inspected, recognizes the difference in degradation mechanisms related to failure likelihood and the consequence of failure, and considers the effects of enhanced inspection. The improved inspection techniques that are designed to be effective for specific degradation mechanisms and examination locations should substantially increase the fraction of potential weld ruptures that would be identified by inspection before the flaw develops into an actual rupture. Redistributing the welds to be inspected by consideration of the safety significance of the segments provides assurance that segments whose failures have a significant impact on plant risk receive an acceptable and often improved level of inspection. It is, therefore, concluded that implementation of the RI-ISI program as described in the application will reduce or negligibly increase the risk and thus will not cause the NRC Safety Goals to be exceeded.

### 3.3 Integrated Decisionmaking

RG 1.178 and SRP Chapter 3.9.8 guidelines describe an integrated approach that should be utilized to determine the acceptability of the proposed RI-ISI program by considering in concert the traditional engineering analysis, risk evaluation, and the implementation and performance monitoring of piping under the program.

The EPRI RI-ISI methodology is a process-driven approach, that is, the process identifies risk-significant pipe segment locations to be inspected without reliance on an expert panel. However, the element selection results will be subjected to a multidiscipline plant review to verify the final risk results and element selections as discussed in Section 3.6.5 of the EPRI TR. The multidiscipline plant review team should possess expertise in the following areas:

- ISI
- System engineering
- Plant operations
- PRA
- Piping and materials engineering with degradation mechanism experience
- Nondestructive examination
- Health physics
- Plant maintenance

Sections 6.1 and 6.2 are provided to demonstrate conformance with RG 1.174 in addressing the key principles of risk-informed decisionmaking, and with RG 1.178 to ensure proper application, on a plant-specific basis, of the four-basic-element approach in making a risk-informed analysis (see Section 3.5 of this SER for a discussion of the four elements).

### 3.3.1 Selection of Examination Locations

Evaluation of the selection of piping segment elements to be examined as part of the RI-ISI program is addressed in Section 3.6 of EPRI TR-112657, Rev. B. The specific guidelines for ASME Code Cases N-560 and N-578 are contained in Sections 3.6.4.1 and 3.6.4.2, respectively.

ASME Code Case N-560 guidelines state that the number of elements to be examined as part of the RI-ISI program should be 10 percent of the total piping weld population. All elements are to be subjected to pressure-/leak-testing requirements. Locations that are in the High risk categories and are susceptible to FAC or IGSCC, and are included in the existing plant FAC or IGSCC inspection programs, are credited as part of the required sample size.

Augmented inspection programs being conducted for N-560 scope may also be credited toward the 10 percent sampling requirement of N-560 provided the following requirements are met:

- Augmented inspections for locations identified that are in the Low or Medium risk categories may not be used to replace or supplant inspections of High risk locations.
- The 10 percent inspection sample shall include a reasonable representation of different material, such as stainless steel and carbon steel.
- Each degradation mechanism type existing in High risk locations shall be inspected.
- In the absence of specific justification, no more than one half of the N-560 inspections may be taken from the augmented inspection program.

ASME Code Case N-578 guidelines specify that for those segments not included in the existing plant FAC and IGSCC inspection programs, the number of locations to be volumetrically examined as part of the RI-ISI program is as follows: For piping segments that are in Risk Category 1, 2, or 3 (High risk), the number of inspection locations in each risk category should be 25 percent of the total number of elements in each risk category. For Risk Categories 4 and 5 (Medium risk), the number of inspection locations in each category should be 10 percent of the

total number of elements in each risk category. Volumetric examinations are not required for those segments determined to be in Risk Category 6 or 7 (Low risk). However, all elements, regardless of risk category, are to be subjected to pressure-/leak-testing requirements under the ASME XI Code. For ASME Code Case N-578 applications that include Class 1 piping, the EPRI methodology recommends reviewing any resulting Class 1 inspection populations that are less than 10 percent of the Class 1 piping population.

For welds and elements that are included in the existing plant FAC or IGSCC inspection programs, the EPRI TR Section 3.6.4.2 provides the following guidance: For elements in Risk Category 1, 3, or 5, or 7 that are included in a plant's existing FAC inspection program, the elements and frequency are to be the same as in the existing plant FAC inspection program. The existing FAC program is to remain unchanged and is not subsumed under the EPRI RI-ISI program. For those IGSCC Category B through G welds that are in Risk Category 1, 2, 3, 5, 6, or 7, the number, location, and frequency of inspections are to be the same as in the existing plant IGSCC inspection program. Only IGSCC Category A welds are subsumed under the EPRI RI-ISI program.

For the locations not included in the FAC or IGSCC augmented inspection programs, other factors need to be considered in the selection of the final inspection locations. As discussed in Section 3.6.5 of EPRI TR-112657, Rev. B, actual operating and design conditions for each element within the segment are to be compared to the attribute criteria contained in EPRI TR Table 3-14. Those elements determined to be the most susceptible to the damage mechanism(s) present are selected for inspection. The selection of individual inspection locations also depends upon several other factors, including the degradation mechanism present, physical access constraints, and radiation exposure. Accordingly, the staff finds that the overall risk-ranking process will result in the systematic identification of risk-significant welds and that the EPRI methodology provides adequate justification for the locations to be examined.

For systems that are subject to localized corrosion, for example, service water systems, the degradation mechanisms for MIC, pitting, and flow-induced erosion-cavitation are expected to dominate. For such systems, the examination selection guidance is not practical in that localized corrosive attack can occur within substantially large portions of the piping and is not necessarily associated with a discontinuity such as a weld. Section 3.6.7 of EPRI TR-112657, Rev. B, includes a detailed process description and guidance for licensees to conduct "finer screening" evaluations for these systems. The method recognizes that there is variation in the severity of these degradation mechanisms (e.g., areas close to biocide injection may experience degradation greater than predicted from nominal biocide concentrations) and variation due to geometrical properties (e.g., enhanced deposition at the bottom of long vertical runs). A preliminary element selection is based on the identification of worst case areas and a selection of typical areas. The final element selection includes a sampling of High consequence segments not captured by the preliminary selection and the substitution of higher consequence elements for lower consequence elements of the same or similar susceptibility.

The staff finds that this degradation susceptibility review process, augmented by the selection of higher risk locations, is a systematic and reasonable method for considering engineering and risk insights in establishing a program to assess service-induced degradation due to variable, localized corrosion.

### 3.3.2 Examination Methods

Licensees that wish to apply the EPRI TR-112657, Rev. B, methodology to an RI-ISI program must conform to the guidelines of RG 1.178 for examination and pressure testing or justify alternatives to these provisions. Examination methods and personnel qualification must be in accordance with the ASME Code Section XI Edition and Addenda endorsed by the NRC through 10 CFR 50.55a. For inspections outside the scope of Section XI (e.g., FAC, IGSCC), the acceptance criteria should meet existing regulatory guidance applicable to those programs.

The objective of ISI and ASME Code Section XI is to identify conditions (i.e., flaw indications) that are precursors to leaks and ruptures in the pressure boundary that may affect plant safety. Therefore, the RI-ISI program must meet this objective to be found acceptable for use. Further, since the risk-informed program is based on inspection for cause, element selection should target specific degradation mechanisms.

Evaluation of degradation mechanisms to determine the potential for piping failure is provided in Section 3.4 of EPRI TR-112657, Rev. B. The associated mechanism-specific examination volumes and methods for the selected piping structural elements are provided in Section 4 of EPRI TR-112657, Rev. B. Table 3-14 of EPRI TR-112657, Rev. B, provides a summary of the degradation mechanism-specific NDE methods and the associated acceptance standards, evaluation standards, and inspection frequencies. As set forth in RG 1.178, all ASME Code Class 1, 2, and 3 piping systems included in the scope of an RI-ISI program will continue to receive visual examination for leakage in accordance with the pressure test requirements of ASME Code Section XI. Because the examination methods specified in EPRI TR-112657, Rev. B, are designed for specific degradation mechanisms and examination locations, the staff concludes that the examination methods selected are appropriate for the degradation mechanisms, pipe sizes, and materials of concern.

## 3.4 Implementation and Monitoring

The objective of this element of RGs 1.174 and 1.178 is to assess performance of the affected piping systems under the proposed RI-ISI program by implementing monitoring strategies that confirm the assumptions and analysis used in developing the RI-ISI program. To satisfy 10 CFR 50.55a(a)(3)(i), implementation of the RI-ISI program (including inspection scope, examination methods, and methods of evaluation of examination results) must provide an adequate level of quality and safety. The methodology and procedures in EPRI TR-112657, Rev. B, will be used by licensees to define the scope of a risk-informed piping ISI program. This scope is defined by establishing piping segments, inspection element locations, inspection methods, examination volumes, and acceptance and evaluation criteria. A licensee using this methodology will be expected to incorporate the results of its RI-ISI evaluation into plant-specific program procedures that are consistent with the performance-based implementation and monitoring strategies specified in RG 1.178 and ASME Code Section XI.

Implementing the proposed RI-ISI program will reduce the number of examinations but will also likely result in the selection of locations that have not been previously examined. When

examination is not practical or is limited because of physical constraints or radiation hazards, RG 1.178 states that alternative inspection intervals, scope, and methods should be developed to ensure that piping degradation is detected and structural integrity is maintained. It is anticipated that the licensees will address alternatives on a case-by-case basis and that limited examinations will be identified and submitted to the NRC staff for review and approval in plant-specific applications. Sections 6.1 and 6.2 of EPRI TR-112657, Rev. B, provide further discussion of performance-based implementation and monitoring strategies to confirm that existing monitoring and feedback mechanisms provided in Section XI will be maintained. The inspection results from implementation of the RI-ISI program will be compared to preservice inspection and prior ISI (IWX-3130[c]), and the process for expanded sampling will be followed if flaws are found to exceed the acceptance criteria (IWX- 3500).

An RI-ISI program for piping should be implemented at the start of a plant's next ISI interval, consistent with the requirements of the ASME Code Section XI Edition and Addenda committed to by a licensee in accordance with 10 CFR 50.55a, or any delays granted by the NRC staff pursuant to 10 CFR 50.55a(g)(6). As noted in EPRI TR-112657, Rev. B, Section 3.6.6, in general, updates and changes to the plant inspection program will occur at the start of each 10-year inspection interval according to the requirements specified in 10 CFR 50.55a and ASME Code Section XI. Thus, for many plants, the initial implementation of an RI-ISI program will coincide with the start of a new 10 year inspection interval. However, the RI-ISI program can be implemented at any time within an inspection interval as long as the examination schedules are consistent with the interval requirements contained in Article IWA-2000 of ASME Section XI as applied to Inspection Program B. Implementation of an RI-ISI program will continue to incorporate lessons learned from sources such as inspection and examination results, plant service experience, industry notices and bulletins, and NRC generic letters and bulletins, which may require modification of the RI-ISI program.

The proposed periodic reporting requirements meet existing ASME Code requirements and applicable regulations and, therefore, should be considered acceptable. The proposed process for RI-ISI program updates meets the guidelines of RG 1.174 that provide that risk-informed applications must include performance monitoring and feedback provisions; therefore, the process for program updates is considered acceptable.

### 3.5 Conformance to Regulatory Guide 1.174

RG 1.174 describes an acceptable method for assessing the nature and impact of licensing basis changes by a licensee when the licensee chooses to support these changes with risk information. RG 1.174 identifies a four-element approach, as discussed below, for evaluating such changes which are aimed at addressing the five principles of risk-informed regulation. RG 1.178 is consistent with RG 1.174 and focuses on the use of PRA in support of a risk-informed ISI program. Sections 6.1 and 6.2 of EPRI TR-112657, Rev. B, summarize how the proposed process conforms to the RG 1.174 approach. The staff finds that the EPRI TR-112657, Rev. B, approach is consistent with RG 1.174 as discussed below.

- In Element 1 of the RG 1.174 approach, the licensee is to define the proposed change. Sections 6.1 and 6.2.1 of EPRI TR-112657, Rev. B, discuss current regulatory requirements

for the ISI program and the changes in regulatory compliance using the RI-ISI approach. The scope of the changes is also discussed, and this scope includes the addition of any non-ASME Code piping identified as highly risk significant. The staff finds the discussion in EPRI TR-112657, Rev. B, to be consistent with the guidance provided in Section 2.1 of RG 1.174.

- Element 2 is the performance of the engineering analysis. In this element, the licensee is to consider the appropriateness of qualitative and quantitative analyses, as well as analyses using traditional engineering approaches and those techniques associated with the use of PRA findings. Regardless of the analysis method chosen, the licensee needs to satisfy the principles set forth in Section 2 of RG 1.174, which include, for example, reasonable balance between prevention and mitigation and avoidance of over reliance on programmatic activities. Sections 1, 2, and 3 of EPRI TR-112657, Rev. B, describes the probabilistic and deterministic engineering analyses to be performed to categorize the risk significance of the piping segments. The results of these analyses are used to determine the number of locations to be inspected and to select the inspection locations and inspection methods. Accordingly, the staff finds that the evaluation process as summarized in Sections 6.1 and 6.2 of EPRI TR-112657, Rev. B, meets the criteria of this element.

- Element 3 is the definition of the implementation and monitoring program. The primary goal of this element is to ensure that no adverse safety degradation occurs because of changes to the ISI program, and the staff finds that the guidance provided in EPRI TR-112657, Rev. B, Section 3.6, provides feedback appropriate to alert the licensee of adverse safety degradation, and, therefore, is adequate to meet this goal. In addition, the monitoring, feedback, and corrective action programs discussed are consistent with guidelines provided in Section 2.3 of RG 1.174.

- Element 4 is the submittal of the proposed change. EPRI TR-112657, Rev. B, states that each licensee will submit its proposed change for prior approval before they implement an RI-ISI program.

RG 1.174 states that in implementing risk-informed decisionmaking, plant changes are expected to meet a set of key principles. The following paragraphs summarize these principles and the staff findings related to the conformance of EPRI TR-112657, Rev. B, methodology with these principles.

- Principle 1 states that the proposed change must meet current regulations unless it is explicitly related to a requested exemption or rule change. The proposed RI-ISI change is an alternative to the ASME Code Section XI as may be requested under 10 CFR 50.55a(a)(3). The proposed change is an alternative to piping ISI requirements with regard to the number of inspections, locations of inspections, and methods of inspections. Each licensee seeking to implement the alternative will request NRC approval pursuant to 10 CFR 50.55a(a)(3). Therefore, principle 1 is satisfied.

- Principle 2 states that the proposed change must be consistent with the defense-in-depth philosophy. ISI is an integral part of defense-in-depth. As part of the RI-ISI process, the risk significance categorization and the specification of the subsequent number and location of elements to inspect will maintain the basic intent of ISI (i.e., identifying and repairing flaws

before pipe integrity is challenged). Therefore, although a reduction in the number of welds inspected is anticipated, if a licensee implements an RI-ISI program as described in the EPRI TR and subject to the conditions specified in this SER, there will be reasonable assurance that the program will provide a substantive ongoing assessment of piping condition.

- Principle 3 states that the proposed change shall maintain sufficient safety margins. No changes to the evaluation of design basis accidents in the final safety analysis report (FSAR) are being made by the RI-ISI process. Therefore, sufficient safety margins will be maintained.

- Principle 4 states that when proposed changes result in an increase in CDF or risk, the increases should be small and consistent with the intent of the Commission's Safety Goal Policy Statement. Redirecting inspections to highly risk significant locations and adaption of inspection procedures to the identified degradation mechanisms at the specified locations is expected to contribute to a reduction of risk that will partially or fully offset any risk increase from discontinuing inspection at low risk significant locations. Section 3.7 of EPRI TR-112657, Rev. B, discusses a method to investigate the risk implications of the proposed change to support the finding that this principle is met. Staff findings with regard to principle 4 are found in Section 3.2.7 of this SER.

- Principle 5 states that the impact of the proposed change should be monitored using performance measurement strategies. EPRI TR's conformance to this principle is already discussed in the paragraph on Element 3 above.

## 4.0 CONCLUSIONS

As provided in 10 CFR 50.55a(a)(3), alternatives to the requirements of paragraph (g) may be used, when authorized by the NRC, if (1) the proposed alternatives would provide an acceptable level of quality and safety or (2) compliance with the specified requirements would result in hardship or unusual difficulty without a compensating increase in the level of quality and safety. Based on its evaluation of the EPRI TR, the staff has reached the following conclusions:

The methodology conforms to the guidance provided in RGs 1.174 and 1.178 in that no significant risk increase should be expected from the changes to the ISI program resulting from applying the methodology. According to this methodology, the licensees will identify those aspects of the plants' licensing bases that may be affected by the proposed change, including rules and regulations, the FSAR, technical specifications, and licensing conditions. In addition, the licensees will identify all changes to commitments that may be affected, as well as the particular piping systems, segments, and welds that are affected by the change in the ISI program. Specific revisions to inspection scope, schedules, locations, and techniques will also be identified, as will plant systems and functions that rely on the affected piping.

The EPRI procedure for subdividing piping systems into segments is predicated on identifying portions of piping having the same consequences of failure and the same potential degradation mechanisms. The impact on risk attributable to piping pressure boundary failure considers both direct and indirect effects. Consideration of direct effects includes failures that cause initiating

events or disable single or multiple components, trains or systems, or a combination of these effects. The methodology also considers indirect effects of pressure boundary failures affecting other SSCs or piping segments, also referred to as spatial effects such as pipe whip, jet impingement, flooding, or failure of fire protection systems.

Each segment's relative potential for failure is consistent with systematic consideration of degradation mechanisms, segment and weld material characteristics, and environmental and operating stresses. The assessment of component failure potential attributable to aging and degradation takes into account uncertainties. Only a pipe segment that is susceptible to FAC receives a high failure potential, unless that segment is susceptible to a different degradation mechanism other than FAC and also has the potential for water hammer. Plant service history, as well as industry experience, is an important consideration in the EPRI methodology for evaluating degradation mechanisms to ensure completeness and to validate the existence of any identified mechanism. The licensee seeking to implement RI-ISI uses actual operating experience at the plant to define the potential degradation mechanism for specific piping segments. The staff finds that the EPRI methodology meets the SRP guidance for ensuring that a systematic process is used to identify pipe segments susceptible to common degradation mechanisms, and for categorizing these mechanisms into the appropriate degradation categories with respect to their potential to result in a postulated large pipe break.

The results of the different elements of the engineering analysis are considered in an integrated decisionmaking process. The impact of the proposed change in the ISI program is founded on the adequacy of the engineering analysis, acceptable change in plant risk, and the adequacy of the proposed implementation and performance monitoring plan in accordance with RG 1.174 guidelines.

The EPRI methodology also considers implementation and performance-monitoring strategies. Inspection strategies ensure that failure mechanisms of concern have been addressed and there is adequate assurance of detecting damage before structural integrity is affected. The risk significance of piping segments is taken into account in defining the inspection scope for the RI-ISI program.

System pressure tests and visual examination of piping structural elements will continue to be performed on all Class 1, 2, and 3 systems in accordance with the ASME Code Section XI program. The RI-ISI program applies the same performance measurement strategies as existing ASME Code requirements and, in addition, increases the inspection volumes at weld locations.

EPRI TR-112657, Rev. B, has provided the methodology for conducting an engineering analysis of the proposed changes using a combination of engineering analysis with supporting insights from a PRA. Defense-in-depth and quality is not degraded in that the methodology provides reasonable confidence that any reduction in existing inspections will not lead to degraded piping performance when compared to existing performance levels. Inspections are focused on locations with active degradation mechanisms as well as selected locations that monitor the performance of system piping.

Safety margins used in design calculations are not changed. Piping material integrity is monitored to ensure that aging and environmental influences do not significantly degrade the piping to unacceptable levels.

Augmented examination programs for degradation mechanisms, such as IGSCC, Category B through G welds, and FAC, would remain unaffected by the RI-ISI program.

Although the staff finds the general guidance provided in EPRI TR-112657, Rev. B, to be acceptable, application of this guidance will be plant specific. As such, individual applications in RI-ISI must address the various plant-specific issues. These include the following:

- The quality, scope, and level of detail of the PRA used, as described in RGs 1.174 and 1.178 (see Section 3.2.6 of this SER).

- The guidelines and assumptions used for determining direct and indirect effects of flooding, including assumptions on the failure of components affected by the pipe break (see Section 3.2.4 of this SER).

- The criteria, information sources, and results of the in-depth review of plant and industry operating experience to determine the type and location of degradation mechanisms when modifying existing thermal fatigue and localized corrosion augmented inspection programs (see Section 3.2.1 of this SER).

- The review and acceptance of the reactor operating characteristics, reactor design characteristics, and operating failure experience evaluation and categorization used for estimating the state transition rates for the licensee's reactor type and system types when the Markov method is used (see Section 3.2.8 of this SER).

In the public meeting on January 5, 1999 (Ref. 18), the staff and nuclear industry representatives discussed the information to be submitted to the NRC and the list of retrievable onsite documentation for potential NRC audits of licensees that seek to implement an RI-ISI methodology. Based on the analysis in this SER, the staff concludes that the RI-ISI program proposed in EPRI TR-112657, Rev. B, if supplemented by appropriate plant-specific information, can be an alternative to piping ISI requirements with regard to the number, locations, and methods of inspections that provides an acceptable level of quality and safety pursuant to 10 CFR 50.55a(a)(3). The staff concludes further that a licensee requesting to implement such an RI-ISI program pursuant to section 50.55a(a)(3) may incorporate into its application, by reference, the program described in EPRI TR-112657, Rev. B, and rely on that program, together with appropriate plant-specific information, to demonstrate that the licensee's plant-specific alternative RI-ISI program for piping satisfies section 50.55a(a)(3), provided that:

(A) The application includes the following information:

1. justification for statement that PRA is of sufficient quality;
2. summary of risk impact;
3. current inspection code;
4. impact on previous relief requests;

5. revised FSAR pages affected by the change, if any;
6. process followed (EPRI TR-112657, Rev. B, ASME Code Case, and exceptions to methodology, if any);
7. summary of results of each step (e.g., number of segments, number of segments in Risk Categories 1 one through 7, number of locations to be inspected, etc.);
8. a statement that RG principles have been met (or any exceptions);
9. summary of changes from the current ISI program; and
10. summary of any augmented inspections that would be affected; and

(B) the licensee maintains, in an auditable form at the plant site, the following information:

1. scope definition;
2. segment definition;
3. degradation mechanism assessment;
4. consequence evaluation;
5. confirmatory PRA model runs and results for the RI-ISI program;
6. risk evaluation;
7. structural element/NDE selection;
8. change in risk calculation;
9. PRA quality review; and
10. continual assessment forms as program changes in response to inspection results;
11. documentation required by ASME Code (including qualification of inspection personnel, inspection results, and flaw evaluations).

## 5.0 REFERENCES


1. EPRI TR-112657, *Revised Risk-Informed Inservice Inspection Evaluation Procedure*, April 1999.

2. EPRI TR-112657, Rev. B, Final Report, *Revised Risk-Informed Inservice Inspection Evaluation Procedure*, July 1999.

3. U.S. Nuclear Regulatory Commission, "An Approach for Using Probabilistic Risk Assessment in Risk-Informed Decisions on Plant-Specific Changes to the Licensing Basis," Regulatory Guide 1.174, July 1998.

4. NRC Regulatory Guide 1.178, *An Approach for Plant-Specific Risk-Informed Decision Making: Inservice Inspection of Piping*, September 1998.

5. ASME Code Case N560, *Alternative Examination Requirements for Class 1, Category B-J Piping Welds, Section XI, Division 1*, approved August 9, 1996.

6. ASME Code Case N-578, *Risk-Informed Requirements for Class 1, 2, and 3 Piping, Method B*, Section XI, Division 1, approved September 2, 1997.

7. Letter, dated November 13, 1998, Jeff Mitman (EPRI Project Manager), to Dr. Brian W. Sheron (NRC), containing response to NRC request for additional information.

8. U.S. Nuclear Regulatory Commission Generic Letter 89-08, "Erosion/Corrosion-Induced Pipe Wall Thinning," May 2, 1989.

9. U.S. Nuclear Regulatory Commission Generic Letter 88-01, "NRC Position on IGSCC in BWR Austenitic Stainless Steel Piping," January 25, 1988.

10. Standard Review Plan (SRP) Chapter 3.9.8, *Standard Review Plan for Trail Use for the Review of Risk-Informed Inservice Inspection of Piping*, NUREG-0800, May 1998.

11. Standard Review Plan Chapter 19.0, "Use of Probabilistic Risk Assessment in Plant-Specific, Risk-Informed Decisionmaking: General Guidance," NUREG-0800, July 1998.

12. Letter dated March 9, 1999, Jeff Mitman (EPRI Project Manager) to Syed Ali (NRC), containing meeting minutes and response to second NRC request for information.

13. U.S. Nuclear Regulatory Commission IE Bulletin 79-17, "Pipe Cracks in Stagnant Borated Water Systems at PWR Plants," July 26, 1979.

14. U.S. Nuclear Regulatory Commission Generic Letter 89-13, Supplement 1, "Service Water System Problems Affecting Safety-Related Equipment," April 4, 1990.

15. U.S. Nuclear Regulatory Commission Generic Letter 88-08, "Thermal Stresses in Piping Connected to Reactor Coolant Systems," June 22, 1988.

16. EPRI TR-110161, *Piping System Reliability and Failure Rate Estimation Models for Use in Risk-Informed In-Service Inspection Applications*, December 1998, Proprietary.

17. TSA-1/99-164, "Final (Revised) Review of the EPRI-Proposed Markov Modeling/Bayesian Updating Methodology for Use in Risk-Informed Inservice Inspection of Piping in Commercial Nuclear Power Plants," H. Martz, Los Alamos National Laboratory, June 1999.

18. Minutes for NRC Meeting with the Nuclear Energy Institute (NEI) Regarding Issues Related to Risk-Informed Inservice Inspection Activities on January 5, 1999.

# CITATIONS

This report was prepared by

Duke Engineering and Services, Inc.
Solomon Pond Park
400 Donald Lynch Boulevard
Marlborough, MA 01752

Principal Investigator
V. Dimitrijevic

ERIN Engineering and Research, Inc.
2111 Pallomar Airport Rd., Suite 180
Carlsbad, CA 92009

Principal Investigator
K. Fleming

Inservice Engineering
5417 Challen Place
Downers Grove, IL 60515-4471

Principal Investigator
R. Fougerousse

Structural Integrity, Associates
3315 Almaden Expressway
Suite 24
San Jose, CA 95118-1557

Principal Investigators
G. Licina
P. Riccardella

EPRI
3412 Hillview Avenue
Palo Alto, CA

Priciple Investigators
F. Ammirato
J. Mitman
P. O'Regan
S. Walker

This report describes research sponsored by EPRI.

The report is a corporate document that should be cited in the literature in the following manner:

*Revised Risk-Informed Inservice Inspection Evaluation Procedure (PWRMAP-05-A),* EPRI, Palo Alto, CA: 1999. TR-112657 Rev. B-A.

# REPORT SUMMARY

Operating nuclear power plants currently rely on the implementation of ASME Section XI inservice inspection (ISI) programs for integrity management of Class 1, 2, and 3 systems and components. The evaluation procedure documented in this report provides a practical approach that can be consistently applied by nuclear plant personnel to identify risk-significant pipe segments, define the elements that are to be inspected within these risk-significant segments, and identify appropriate inspection methods.

## Background

The scope for ASME Section XI ISI programs is largely based on deterministic results contained in design stress reports. These reports are normally very conservative and may not be an accurate representation of failure potential. Service experience has shown that failures are due to either corrosion or fatigue and typically occur in areas not included in the plant's ISI program. Consequently, nuclear plants are devoting significant resources to inspection programs that provide minimum benefit.

As an alternative, significant industry attention has been devoted to the application of risk-informed selection criteria in order to determine the scope of inservice inspection (ISI) programs at nuclear power plants. EPRI studies indicate that the application of these techniques will allow operating nuclear plants to reduce the examination scope of current ISI programs by as much as 60% to 80%, significantly reduce costs, and continue to maintain high nuclear plant safety standards.

## Objectives

- To develop practical, cost-effective piping inspection methodology that reduces operation costs and maintains or improves plant safety, and can be implemented by utility engineers without depending on outside consultants
- To integrate supplemental inspection programs that are currently outside the scope of ASME Section XI
- To include guidance that will help utilities select and implement appropriate examination methods

## Approach

The EPRI risk-informed selection procedure represents a traditional application of risk-informed processes. A blended approach that combines probabilistic safety assessment (PSA) and deterministic insights in support of the application is used. The EPRI method utilizes the PSA for consequence analysis, and service experience to determine piping's susceptibility to damage, instead of probabilistic fracture mechanics. The evaluation process includes system and

evaluation boundary identification, failure modes and effects analysis (FMEA), risk evaluation, and selection of inspection locations and examination methods. System identification includes the selection of systems for analysis and the identification of evaluation boundaries and functions. The FMEA consists of a consequence evaluation and degradation mechanism evaluation. These results are used to divide the system into piping segments, which are determined to have common degradation mechanisms and failure consequences. The key to this approach is grouping individual segments into one of three risk regions—High, Medium, or Low. The number of elements examined as part of the RI-ISI program is based on the risk region for the risk-significant segments (High or Medium), and will be a percentage of the total number of elements in each risk region. The selection for examination of specific elements within a segment is based on the degradation mechanism, as well as inspection cost, radiation exposure, and accessibility. Inspection for cause process is then implemented to ensure that appropriate examination methods, procedures, acceptance criteria, and evaluation standards are applied to address the degradation mechanisms of concern.

## Results

This revision to the procedures is a refinement based on the successful application to ongoing PWRs and BWRs. Several of the pilot application studies have been completed with Safety Evaluation Reports (SER) issued by the U.S. NRC. In addition, the U.S. NRC has issued an SER on this report, thus approving the method. The process effectively integrates service experience and existing supplemental integrity management programs at the plant, such as IGSCC and FAC. Finally, the risk-based selection process is coupled with a sound "inspection for cause" program. This way the process will not only identify the risk-important areas of the plant, but also define the appropriate examination methods, procedures, acceptance criteria, and evaluation standards necessary to address the degradation mechanisms of concern.

## EPRI Perspective

For many nuclear plants, implementation of a risk-informed ISI program is expected to result in cost saving of $150,000 to $300,000 per outage. It is essential that the procedures developed are not only technically sound but are practical and cost-effective.

## TR-112657 Revision B-A


## Keywords

ASME Section XI
Risk-informed inservice inspection
ISI
PSA
NDE

# ABSTRACT

This report describes evaluation procedures for using risk to define inspection locations for safety significant piping in nuclear power plants. PSA insights, deterministic evaluations, and plant service experience are integrated in a practical, easy-to-use format. PSA insights are based on the logic structure used in the existing plant PSA. These procedures are consistent with the guiding principles set forth in the EPRI PSA Applications Guideline and NEI guidelines for risk-based inservice inspection, U.S. NRC Regulatory Guides 1.174 and 1.178.

The risk-informed inspection procedures in this report are intended to support ongoing and future BWR and PWR plant application studies. The results and lessons learned from the successful pilot studies have been incorporated into this final report.

# CONTENTS


**1 INTRODUCTION** ..... **1-1**

1.1 Background ..... 1-1

1.2 Objectives ..... 1-3

1.3 Approach ..... 1-3

1.4 Summary of Enhancements Made Since TR-106706 ..... 1-5

**2 TECHNICAL BASIS METHODOLOGY** ..... **2-1**

2.1 Technical Objectives of RI-ISI ..... 2-2

2.2 Insights from Service Experience ..... 2-3

2.2.1 Service Experience Basis ..... 2-3

2.2.2 Service Experience Insights Developed Since EPRI TR-106706 ..... 2-6

2.2.3 Limitations of Service Experience Data ..... 2-13

2.2.4 Conclusions From Analysis of Service Experience ..... 2-13

2.3 Summary of ASME White Paper 92-01-01, Rev. 1 ..... 2-14

2.4 Integration of NUREG-0313 and RI-ISI ..... 2-19

2.5 Findings of Third Party Reviews ..... 2-21

2.5.1 Results of Adequacy Review from View Point of PSA Technology ..... 2-21

Review Findings ..... 2-21

Recommendations ..... 2-21

Response to Adequacy Review from View Point of PSA Technology ..... 2-22

2.5.2 Results of Review of Treatment of Degradation Mechanisms ..... 2-22

Response to Review Treatment of Degradation Mechanisms ..... 2-23

**3 METHODOLOGY DESCRIPTION** ..... **3-1**

3.1 Overview of Methodology ..... 3-1

3.2 Definition of RI-ISI Program Scope ..... 3-5

3.3 Consequence Evaluation ..... 3-5

3.3.1 Fundamental Principles ..... 3-5

3.3.2 Consequence Ranking and Categorization ..... 3-6
3.3.3 Consequence Impact Groups and Configurations ..... 3-8
3.3.3.1 Initiating Event Impact Group ..... 3-9
3.3.3.2 Loss of Mitigating Ability Impact Group ..... 3-12
3.3.3.2.1 Frequency of the Challenge ..... 3-17
3.3.3.2.2 Number of Backup Systems and/or Trains available ..... 3-17
Human Actions as Backup Trains ..... 3-20
3.3.3.2.3 Exposure Time ..... 3-20
Numerical Basis for Table 3-5 ..... 3-22
3.3.3.3 Combinations Impact Group ..... 3-23
3.3.3.4 Containment Performance Impact Group ..... 3-24
Impact on Containment Isolation ..... 3-25
LOCA Outside Containment ..... 3-25
Impact on Early Core Melt and Containment Structural Failure ..... 3-26
3.3.3.5 Examples of Consequence Evaluations ..... 3-26
3.3.3.5.1 Operating Configuration ..... 3-27
Initiating Event Impact Group ..... 3-27
Combination Impact Group ..... 3-27
Illustration ..... 3-28
3.3.3.5.2 Standby Configuration ..... 3-28
Illustration ..... 3-28
3.3.3.5.3 Demand Configuration ..... 3-29
Illustration ..... 3-29
3.3.4 Other Modes of Operation ..... 3-30
3.3.5 External Events ..... 3-31
3.3.6 Application of the Plant-Specific PSA ..... 3-31
3.4 Degradation Mechanism Evaluation ..... 3-33
3.4.1 Piping Failure Potential Assessment ..... 3-33
3.4.1.1 Expert Judgment ..... 3-33
3.4.1.2 Structural Reliability Analysis ..... 3-34
3.4.1.3 Service Experience Based Failure Rates ..... 3-34
3.4.1.4 Degradation Mechanism Evaluation ..... 3-35
3.4.2 Degradation Mechanism Descriptions and Attributes ..... 3-35
Design Characteristics ..... 3-35

Fabrication Practices ..... 3-36
Operating Conditions ..... 3-36
Service Experience ..... 3-36
3.4.2.1 Degradation Mechanism Assessment ..... 3-37
Design Characteristics ..... 3-42
Fabrication Practices ..... 3-42
Operating Conditions ..... 3-42
3.4.2.2 Service Experience and Susceptibility Review ..... 3-43
3.4.2.3 Application of Degradation Mechanisms Assessment ..... 3-45
3.4.2.4 Degradation Mechanism Descriptions ..... 3-45
Thermal Fatigue ..... 3-45
Mechanism Description ..... 3-45
Attribute Criteria ..... 3-45
Thermal Transients ..... 3-45
Thermal Stratification Cycling and Striping ..... 3-45
Stress Corrosion Cracking (SCC) ..... 3-45
Intergranular Stress Corrosion Cracking (IGSCC) ..... 3-46
Attribute Criteria ..... 3-46
Transgranular Stress Corrosion Cracking (TGSCC) ..... 3-46
Mechanism Description ..... 3-46
Attribute Criteria ..... 3-46
External Chloride Stress Corrosion Cracking (ECSCC) ..... 3-46
Mechanism Description ..... 3-46
Attribute Criteria ..... 3-47
Primary Water Stress Corrosion Cracking (PWSCC) ..... 3-47
Mechanism Description ..... 3-47
Attribute Criteria ..... 3-47
Localized Corrosion ..... 3-47
Microbiologically Influenced Corrosion (MIC) ..... 3-47
Mechanism Description ..... 3-47
Attribute Criteria ..... 3-47
Pitting (PIT) ..... 3-48
Mechanism Description ..... 3-48
Attribute Criteria ..... 3-48

Crevice Corrosion (CC) ..... 3-48
Mechanism Description ..... 3-48
Attribute Criteria ..... 3-48
Flow Sensitive (FS) ..... 3-48
Erosion-Cavitation ..... 3-49
Mechanism Description ..... 3-49
Attribute Criteria ..... 3-49
Flow-Accelerated Corrosion (FAC) ..... 3-49
Mechanism Description ..... 3-49
Attribute Criteria ..... 3-49
3.4.2.5 Degradation Mechanism Categories ..... 3-50
3.5 Risk Characterization ..... 3-51
3.5.1 Segment Definition ..... 3-51
3.5.2 Risk Matrix ..... 3-52
3.5.3 Risk Categories ..... 3-53
3.6 Inspection Element Selection ..... 3-54
3.6.1 EPRI RI-ISI Program Objectives ..... 3-54
3.6.2 ASME Section XI Requirements ..... 3-54
3.6.3 RI-ISI Inspection Strategy ..... 3-56
3.6.4 EPRI Risk-Informed Inspection Scope ..... 3-56
3.6.4.1 ASME Code Case N-560 ..... 3-56
3.6.4.2 ASME Code Case N-578 ..... 3-57
3.6.5 Selection of the Inspection Elements ..... 3-58
3.6.5.1 ASME Code Case N-560 Applications ..... 3-59
Augmented Inspection Programs ..... 3-59
Non-Augmented Inspection Program Degradation Mechanisms ..... 3-60
Plant Specific Service History ..... 3-60
Predicted Severity of Postulated Damage Mechanisms ..... 3-60
Configuration / Accessibility of Element to Enable Effective Examination ..... 3-60
Radiation Exposure ..... 3-61
Stress Concentration ..... 3-61
Physical Access to Element ..... 3-61
3.6.5.2 ASME Code Case N-578 Applications ..... 3-61
Augmented Inspection Programs ..... 3-62

Non-Augmented Inspection Program Degradation Mechanisms ..... 3-62
Plant Specific Service History ..... 3-62
Predicted Severity of Postulated Damage Mechanisms ..... 3-62
Configuration / Accessibility of Element to Enable Effective Examination ..... 3-63
Radiation Exposure ..... 3-63
Stress Concentration ..... 3-63
Physical Access to Element ..... 3-63
3.6.6 Examination Schedule ..... 3-63
3.6.6.1 RI-ISI Inspection Frequency ..... 3-63
3.6.6.2 RI-ISI Selected Examinations ..... 3-64
3.6.6.3 Existing Successive Examination ..... 3-65
3.6.7 Alternate Element Selection Criteria – Localized Corrosion ..... 3-65
3.6.7.1 Use of Existing Plant Programs ..... 3-65
3.6.7.2 Use of the Pilot Study Process ..... 3-65
Applicability ..... 3-65
Degradation Mechanisms ..... 3-66
Technical Approach ..... 3-67
Implementation ..... 3-68
Validation ..... 3-70
Examination ..... 3-71
Element Selection ..... 3-71
Examination Results ..... 3-72
Initial Screening Criteria ..... 3-72
Initial Examination ..... 3-73
Subsequent Examinations ..... 3-73
Evaluation Results ..... 3-74
3.7 Risk Impact Assessment ..... 3-82
3.7.1 Qualitative Evaluation of Risk Impact ..... 3-82
3.7.2 Quantitative Evaluation of Risk Impact ..... 3-84
Simplified Risk Quantification Method ..... 3-86
Markov Risk Quantification Method ..... 3-87
Adjustment to Element Selection ..... 3-87

**4 MECHANISM SPECIFIC EXAMINATION VOLUMES AND METHODS ..... 4-1**
4.1 Thermal Fatigue ..... 4-1

Affected Regions ..... 4-1
Examination Volumes ..... 4-1
Examination Volume Figures ..... 4-1
Examination Methods ..... 4-3
Acceptance Standard ..... 4-3
Evaluation Standard (as applicable) ..... 4-3
4.2 Corrosion Cracking ..... 4-6
4.2.1 Chloride Corrosion Cracking ..... 4-6
Affected Region ..... 4-6
Examination Volumes ..... 4-7
Examination Volume Figures ..... 4-7
Examination Method ..... 4-7
Acceptance Standard ..... 4-7
Evaluation Standard (as applicable) ..... 4-7
4.2.2 Crevice Corrosion Cracking ..... 4-8
Affected Region ..... 4-8
Examination Volumes ..... 4-8
Evaluation Volume Figures ..... 4-8
Examination Method ..... 4-8
Acceptance Standard ..... 4-8
Evaluation Standard (as applicable) ..... 4-8
4.3 PWSCC ..... 4-10
Affected Region ..... 4-10
Examination Areas ..... 4-10
Examination Volume Figures ..... 4-10
Examination Method ..... 4-10
Acceptance Standard ..... 4-10
Evaluation Standard (as applicable) ..... 4-10
4.4 Intergranular Stress Corrosion Cracking (IGSCC) ..... 4-12
Affected Region ..... 4-12
Examination Volumes ..... 4-12
Examination Volume Figures ..... 4-12
Examination Method ..... 4-12
Acceptance Standard ..... 4-14

Evaluation Standard ..... 4-14
4.5 Microbiologically Influenced Corrosion (MIC) ..... 4-17
Affected Region ..... 4-17
Examination Volumes ..... 4-18
Examination Volume Figures ..... 4-18
Examination Method ..... 4-18
Acceptance Standard ..... 4-18
Evaluation Standard ..... 4-18
4.6 Erosion-Cavitation ..... 4-20
Affected Region ..... 4-20
Examination Volumes ..... 4-20
Evaluation Volume Figures ..... 4-20
Examination Method ..... 4-20
Acceptance Standard ..... 4-20
Evaluation Standard ..... 4-20
4.7 Flow-Accelerated Corrosion (FAC) ..... 4-21
Affected Region ..... 4-21
Examination Volumes ..... 4-21
Examination Volume Figures ..... 4-21
Examination Method ..... 4-21
Acceptance Standard ..... 4-22
Evaluation Standard ..... 4-22

**5 PLANT INFORMATION REQUIREMENTS AND DOCUMENTATION ..... 5-1**
5.1 Plant Information Requirements ..... 5-1
Evaluation Documentation ..... 5-1
Evaluation Personnel Support ..... 5-2
Miscellaneous ..... 5-2
5.2 Documentation ..... 5-2
5.2.1 Tier 1 Documentation—FMEA Database ..... 5-3
Element Information ..... 5-3
Segment Information ..... 5-3
Degradation Mechanism Identification ..... 5-3
Consequence Evaluation ..... 5-4
Risk Evaluation ..... 5-4

Element Selection ..... 5-4
5.2.2 Tier 2 Documentation ..... 5-4
Piping System Configuration ..... 5-4
Damage Mechanisms ..... 5-4
Consequence Evaluation ..... 5-5
5.2.3 Tier 3 - Licensing Submittal Requirements ..... 5-5
5.3 Licensing Basis and PSA ..... 5-5
Preparer ..... 5-6
Reviewer ..... 5-6
Approver ..... 5-6
PSA Considerations ..... 5-7
5.4 Plant Walkdown ..... 5-8

**6 CONFORMANCE WITH APPLICABLE REGULATORY GUIDES ..... 6-1**
6.1 Conformance with RG 1.174 ..... 6-1
Meeting Current Regulations ..... 6-2
Maintenance of Defense-in-Depth Philosophy ..... 6-2
Reasonable Balance Between Prevention and Mitigation ..... 6-3
Preservation of Redundancy, Independence and Diversity ..... 6-3
Preservation of Common Cause Defenses ..... 6-4
Defenses Against Human Errors ..... 6-4
Avoidance of Over Reliance on Programmatic Activities ..... 6-4
Maintenance of Safety Margins ..... 6-5
Risk Impacts of Implementing RI-ISI ..... 6-5
Monitoring Program ..... 6-6
6.2 Conformance with RG 1.178 ..... 6-6
6.2.1 Element 1: Define the Proposed Change to Inservice Inspection of Piping ..... 6-7
6.2.2 Element 2: Perform Engineering Analyses ..... 6-7
6.2.3 Element 3: Develop Implementation, Performance-Monitoring, and Corrective Action Strategies ..... 6-9
6.2.4 Element 4: Document Evaluations and Submit Request for Proposed Change ..... 6-9
6.3 Continued Conformance with Applicable Codes and Standards ..... 6-9
6.4 Relief Requests ..... 6-9
6.5 Other Inspection Programs and Activities ..... 6-11

IGSCC in BWRs ..... 6-11
IGSCC in PWRs ..... 6-11
Flow Assisted Corrosion (FAC) ..... 6-11
Microbiological Influenced Corrosion (MIC) ..... 6-11
Thermal Fatigue ..... 6-12

**7 REFERENCES ..... 7-1**

**A ACRONYMS AND ABBREVIATIONS ..... A-1**

**B GLOSSARY ..... B-1**

# LIST OF FIGURES

Figure 2-1 Average Frequencies of Pipe Ruptures from Different Failure Mechanisms Through 1995 from Reference [22] ..... 2-6
Figure 2-2 Unconditional Failure and Rupture Frequency Uncertainty Distribution for Stress Corrosion Cracking Degradation Mechanism in BWR RCS (Average for all Pipe Sizes) ..... 2-9
Figure 2-3 Inspection Impact on Plant Rupture Frequencies for Different Vendors (All Pipe Sizes) ..... 2-10
Figure 2-4 EPRI Matrix for Segment Risk Characterization ..... 2-12
Figure 3-1 Overview of EPRI RI-ISI Methodology ..... 3-2
Figure 3-2 EPRI Matrix for Segment Risk Characterization ..... 3-4
Figure 3-3 Heat Removal, Inventory Control, and Long term Heat Removal Safety Functions ..... 3-18
Figure 3-4 Risk Matrix and Risk Categories ..... 3-52
Figure 3-5 Alternate Element Selection Criteria Flowchart ..... 3-79
Figure 3-6 Decision Criteria for Evaluating RI-ISI Impacts on CDF and LERF ..... 3-88
Figure 4-1 Examination Volume for Thermal Fatigue Cracking in Piping Welds Less Than NPS 4 ..... 4-4
Figure 4-2 Examination Volume for Thermal Fatigue Cracking in Piping Welds NPS 4 or Larger ..... 4-4
Figure 4-3 Examination Volume for Thermal Fatigue Cracking in Sweepolets ..... 4-5
Figure 4-4 Examination Volume for Thermal Fatigue Cracking in Weldolets and Sockolets ..... 4-6
Figure 4-5 Examination Volume for Chloride Cracking in Pipe Welds ..... 4-7
Figure 4-6 Examination Volume for Crevice Corrosion Cracking in Nonwelded Attachment ..... 4-9
Figure 4-7 Examination Volume for Crevice Corrosion Cracking in Welded Attachment ..... 4-9
Figure 4-8 Examination Volume for Primary Water Stress Corrosion Cracking in Pipe Connections ..... 4-11
Figure 4-9 Examination Volume for Primary Water Stress Corrosion Cracking in Safe Ends (inspection volume includes inner 1/3 thickness only) ..... 4-11
Figure 4-10 Examination Volume for IGSCC in Piping Welds Less Than NPS 4 ..... 4-14
Figure 4-11 Examination Volume for IGSCC in Piping Welds NPS4 or Larger ..... 4-14
Figure 4-12 Examination Volume for IGSCC in Branch Connections ..... 4-15
Figure 4-13 Examination Volume for IGSCC in Branch Connections ..... 4-16

Figure 4-14 Examination Volume for IGSCC in Branch Connections ..... 4-17
Figure 4-15 Examination Volume for MIC..... 4-19
Figure 4-16 Examination Area for FAC..... 4-22
Figure 4-17 Examination Area for FAC..... 4-23
Figure 4-18 Examination Area for FAC..... 4-24
Figure 4-19 Examination Area for FAC..... 4-25
Figure 4-20 Examination Area for FAC..... 4-26
Figure 4-21 Examination Area for FAC..... 4-26
Figure 4-22 Examination Area for FAC..... 4-27

# LIST OF TABLES

Table 2-1 Service Experience with Leaks and Ruptures from Different Degradation Mechanisms ..... 2-5
Table 2-2 Service Experience From Revised Database Analyzed by Pipe Size Range ..... 2-8
Table 2-3 Rupture Potential Categorization by Segment ..... 2-12
Table 2-4 Summary of NUREG-0313 Inspection Requirements ..... 2-20
Table 3-1 Correspondence of Consequence Categories to Numerical Estimates of Conditional Core Damage Probability (CCDP) and Conditional Large Early Release Probability (CLERP) ..... 3-7
Table 3-2 Definition of Consequence Impact Groups and Configurations ..... 3-9
Table 3-3 General Guidelines for Assigning Consequence Categories to PBFs Resulting in an Initiating Event ..... 3-11
Table 3-4 A Plant-Specific Example of Assigning Consequence Categories to PBFs Resulting in an Initiating Event ..... 3-12
Table 3-5 Guidelines for Assigning Consequence Categories to Pipe Failures Resulting in System/Train Loss ..... 3-13
Table 3-6 Numerical Illustration for Table 3-5, Guidelines for Assigning Consequence Categories to Pipe Failures Resulting in System/Train Loss ..... 3-14
Table 3-7 Numerical Illustration for Table 3-5, Guidelines for Assigning Consequence Categories to Pipe Failures Resulting in System/Train Loss – Upper Bound Sensitivity Case ..... 3-15
Table 3-8 Numerical Illustration for Table 3-5, Guidelines for Assigning Consequence Categories to Pipe Failures Resulting in System/Train Loss – Lower Bound Sensitivity Case ..... 3-16
Table 3-9 Frequency of the Challenge: Numerical Values ..... 3-17
Table 3-10 Backup Trains: Unavailability Values ..... 3-19
Table 3-11 Example Calibration of System Train Worth for a BWR Pilot Plant ..... 3-19
Table 3-12 Exposure Time: Numerical Values ..... 3-21
Table 3-13 Guidelines for Assigning Consequence Categories to Combinations of Consequence Impacts ..... 3-24
Table 3-14 Example of Guidelines for Assigning Consequence Categories to Pipe Failures Resulting in Increased Potential for an Unisolated LOCA Outside of Containment ..... 3-26
Table 3-15 Example Consequence Validation Results Based on PSA Quantification ..... 3-33
Table 3-16 Degradation Mechanism Criteria and Susceptible Regions ..... 3-38

Table 3-17 Example Service History and Susceptibility Review Results for the Reactor Coolant System ..... 3-44
Table 3-18 EPRI System for Evaluation of Pipe Rupture Potential ..... 3-50
Table 3-19 Leak Test and NDE Inspection Requirements for Piping Systems ..... 3-55
Table 3-20 Element Selection Process Considerations ..... 3-63
Table 3-21 Checklist for Assessment of Existing Programs for Risk-Informed Inspection of Systems Susceptible to Localized Corrosion ..... 3-75
Table 3-22 Example Design Description ..... 3-76
Table 3-23 Example Evaluation Criteria for Alternate Element Selection ..... 3-77
Table 3-24 Example Element Selection for Alternate Element Selection Criteria ..... 3-78
Table 4-1 Summary of Degradation-Specific Inspection Requirements and Examination Methods[1] ..... 4-2
Table 5-1 FMECA—Element Identification and ISI Status ..... 5-9
Table 5-2 FMECA—Segment Identification ..... 5-10
Table 5-3 FMECA—Degradation Mechanisms ..... 5-11
Table 5-4 FMECA—Consequences—Spatial Effects ..... 5-12
Table 5-5 FMECA—Consequences—Impact ..... 5-13
Table 5-6 FMECA—Risk Ranking ..... 5-14
Table 6-1 Correspondence of RG 1.178 and Elements of EPRI RI-ISI Procedure ..... 6-7
Table 6-2 Augmented Inspection Programs & Their Relationship to EPRI's RI-ISI Methodology ..... 6-12

# 1
# INTRODUCTION

## 1.1 Background

Today, operating nuclear power plants rely on the implementation of ASME Section XI [1] inservice inspection (ISI) programs for integrity management of Class 1, 2, and 3 systems and components. The scope of these ISI programs is based on deterministic analyses reflected in design stress reports. These analyses are normally very conservative and may not provide an accurate representation of failure potential. Service experience has shown that pipe failures, while rarely occurring, are due primarily to corrosion or fatigue type failure mechanisms and typically occur in locations not addressed in the plant's ISI program. While the use of conservative assumptions is appropriate in the design of piping systems to achieve high levels of reliability, insights supported by service experience indicate they provide misleading expectations regarding the effectiveness of inspection programs. Consequently, nuclear plants are devoting significant resources on an inservice inspection program that may be providing, although adequate, not necessarily an efficient level of safety.

As a result of industry initiatives, the U.S. NRC has issued regulatory guides and standard review plan chapters to promote regulatory reform through the application of risk informed technologies [2,3]. These guides and review plans cover general guidance for risk informed applications aimed toward the reduction of regulatory burden and focusing resources on those with the greatest potential to manage the risk of severe accidents. In addition, they include specific guidance for risk informed changes to inservice inspection programs for piping systems as an alternative to ASME Section XI based inspection programs [4,5].

The technical basis for risk informed inservice inspection (RI-ISI) of piping systems has been developed from two parallel industry efforts, one sponsored by EPRI and the other by the Westinghouse Owners Group [6]. Each of these parallel efforts have included the development of topical reports that describe a risk informed methodology, pilot plant application of these methodologies, NRC staff reviews, third party reviews, and a well documented technical dialogue from these reviews that has strengthened the technical basis for future application by the remaining operating plants.

The EPRI RI-ISI project was built upon an extensive research program that has supported the development of databases, tools, and methodologies for passive component integrity management over a number of years. At the beginning of this project, EPRI developed a risk informed procedure for optimizing piping system inspection programs that was documented in a number of interim reports including TR-106706 [7]. This procedure provided guidance for a number of pilot plant studies that were performed in order to develop risk informed inspection programs and to provide a basis for refining the risk informed approach for industry-wide

application at existing nuclear power stations. Full plant level pilot studies were launched on the James A. Fitzpatrick BWR station operated by New York Power Authority [8], and Entergy's Arkansas Nuclear One (ANO) Unit 2 CE PWR station [9,10]. The Fitzpatrick project is currently in the process of completing its submittal, while the ANO-2 project has received a Safety Evaluation Report from the NRC.

In addition to the two full-scale applications, a number of Class 1 only scope applications (i.e. N560) have been completed or are underway. These pilot plants include:

- Vermont Yankee (GE-BWR) [14] has received a Safety Evaluation Report from the NRC staff approving its implementation [15],
- Arkansas Nuclear One, Unit 1 (B&W-PWR) which is currently responding to NRC RAIs on its submittal [45],
- South Texas Project and Braidwood (both W-PWRs) are in process.

ASME Section XI established the Working Group on the Implementation of Risk-Based Examination. It was tasked to study the application of risk-informed selection criteria to define the scope of inservice inspection programs, and to develop the necessary code changes to support its implementation. A number of ASME code cases were developed and approved by the ASME to implement alternative approaches and scopes for implementing risk informed inservice inspection programs for piping systems. These code cases include:

- N-560 in which the risk informed procedure developed by EPRI can be used to establish the inservice inspection program for B-J welds in Class 1 piping systems [11]. This code case was originally developed by the Task Group on ISI Optimization.
- N-577 in which the risk informed procedure developed by the Westinghouse Owners Group can be used to establish the inservice inspection program for all Class 1, 2, 3 piping systems and other piping systems important to safety [12].
- N-578 which is similar to N-577 but the EPRI RI-ISI procedure is utilized in lieu of the Westinghouse Owners Group method [13].

The development of the ASME code cases and the completion and NRC approval of several pilot plant applications has provided an opportunity to develop, apply, and refine the EPRI method for RI-ISI. In parallel with these successful pilot studies, there were several reviews conducted of the risk-informed procedure described in EPRI TR-106706. The NRC staff provided an extensive list of questions in their Request for Additional Information (RAI) that resulted from their review [17].

The purposes of this topical report are to provide an update of the EPRI procedure that was originally described in EPRI TR-106706 [7] and to obtain a NRC Safety Evaluation Report for generic application.

## 1.2 Objectives

The goal of the EPRI risk informed inspection program is to advance the development of risk technologies and implement these technologies to establish effective piping integrity management programs, reduce industry and regulatory burden, and continue to maintain plant safety. With this goal in mind, EPRI's objectives were quite simple. First and foremost, the risk evaluation approach must be technically sound, practical, and capable of being consistently applied by plant personnel. To the maximum extent possible, the results should be "process driven" and not be overly dependent on subjective judgments. Therefore, the procedures should provide selection criteria that will identify all safety significant piping in the plant, identify the number of inspections that must be performed, and provide a consistent set of rules that the plant personnel can apply to select the actual inspection locations. In this way, the primary role of the plant review will be to verify that the process results are consistent with plant operating conditions and service experience.

Secondly, the process should effectively integrate service experience and existing supplemental integrity management programs at the plant, such as those for intergranular stress corrosion cracking (IGSCC) and flow-accelerated corrosion (FAC).

Finally, the risk informed selection process should be coupled with a technically sound "inspection for cause" program. This way the process will not only identify the risk important areas of the plant, but will also define the appropriate examination methods, examination volumes, procedures, acceptance criteria, and evaluation standards necessary to address the degradation mechanism(s) of concern and the ones most likely to occur at each location to be inspected.

## 1.3 Approach

The EPRI RI-ISI methodology represents a traditional application of risk-informed processes. A blended approach that combines PSA and deterministic insights in support of the application is used. The PSA insights employed are founded on the logic structure of a plant's PSA and service experience insights on the role that inspection programs can play in the prevention of risk significant pipe failures. This logic structure includes the fault tree and event tree models, the failure combinations causing undesired events, and success paths preventing undesired events. This RI-ISI process is consistent with the guiding principles set forth in the EPRI PSA Application Guide [21] and applicable NRC requirements for risk informed applications [2,3,4,5].

The EPRI RI-ISI process includes: selection of RI-ISI program scope, failure modes and effects analysis (FMEA) of pipe segments, risk characterization of pipe elements, selection of inspection locations and examination methods, as necessary an evaluation of risk impacts of inspection program changes, and final RI-ISI program definition. The FMEA process includes two independent evaluations. One evaluation addresses pipe failure potential using degradation mechanisms as the criteria . The second completely independent evaluation addresses the consequences of pipe failures at each location. Consequences are assessed using an approach that measures pipe failure impacts in terms of the conditional probability of core damage and large early release. These assumed piping failures encompass a spectrum of break sizes (small to large) independent of the results of the failure potential assessment.

It is envisioned that once an approved RI-ISI program has been put into place, the results of subsequent inspections, PSA updates, and continued monitoring of plant specific and generic industry service experience with piping systems will be employed to make adjustments to the inspection program as appropriate to ensure that the inspection program is both performance-based and risk-informed.

There are several scope options available to the RI-ISI program, ranging from full scope assessments that include all Class 1,2, and 3 systems and other piping systems important to plant safety as indicated in ASME Code Case N-578, limited scope applications for B-J welds in Class 1 systems as covered in ASME Code Case N-560, or application to one or more pipe classes or selected systems. The approach used to define the scope of these pilot studies is described in Section 3.2. The consequence evaluation is discussed in Section 3.3, while the degradation mechanism evaluation is covered in Section 3.4. The results from these evaluations are used to divide the system into piping segments, which are determined to have common degradation mechanisms and failure consequences.

The risk evaluation procedures described in Section 3.5 categorize the risk of each segment as High, Medium, or Low. The integrity of the piping segments in the low risk categories will continue to be monitored by periodic pressure/leak testing, operator walkdowns, and in-place leakage monitoring programs. For high and medium risk piping segments, the scope of volumetric inspections and selection of inspection locations is defined according to the guidelines in Section 3.6. The piping segments in these risk categories will also continue to be monitored by periodic pressure/leak testing, operator walkdowns, and in place leakage monitoring programs. Depending on whether an N-560 or N-578 type of submittal is envisioned, which impacts the scope of the RI-ISI program, the minimum number of elements to be selected is somewhat different, however the same basic methodology for consequence, degradation mechanism and risk ranking evaluation is followed. Before the RI-ISI program is finalized, as discussed in Section 4, a determination is made that the element selection process does not result in an unacceptable impact on risk as outlined in Section 3.7, using a uniform set of risk acceptance criteria consistent with Regulatory Guide 1.174 [2].

Regardless of the RI-ISI scope, for each inspection location, an inspection for cause approach is implemented to ensure that appropriate examination methods, examination volumes, procedures, acceptance criteria, and evaluation standards are applied to address the degradation mechanisms of concern. These requirements are specified in Sections 3.6 and 4. Documentation requirements, including the expected contents for a submittal for a RI-ISI program based on this topical report, are provided in Section 5.

Since the interim report that first outlined the EPRI process for RI-ISI programs was issued [7], the NRC has issued draft and trial use versions of a regulatory guide and standard review plans for RI-ISI programs [4,5]. EPRI participated in the public meetings and submitted extensive technical peer review comments to support NRC's efforts in preparation of these guidelines. In addition, EPRI has received and responded to extensive requests for additional information to assist the NRC review of the interim report, and the initial pilot plant studies that utilized the EPRI methodology. This dialogue with the NRC staff has provided insights regarding how proper application of the EPRI methodology will conform to applicable codes and standards for RI-ISI. This perspective is outlined in Section 6.

## 1.4 Summary of Enhancements Made Since TR-106706

The lessons learned since publication of the EPRI RI-ISI procedures in Reference [7], through application of that method in the pilot studies and through NRC and third party independent reviews, have provided an opportunity to refine the methodology. The details of these enhancements are discussed in the remaining sections of this report. Key highlights of these enhancements are summarized as follows:

- Documentation has been added for the performance of a risk impact assessment to ensure that the cumulative changes to the inspection program will bring about an acceptable impact on CDF and LERF. While the methodology had been designed from the start with the intention of bringing about a net reduction in risk, the need for a more explicit step in the procedure to address this was apparent particularly after regulatory guidance [2,3,4,5] on these applications became available.
- The grouping of damage mechanisms and specification of screening criteria to determine whether each damage mechanism is relevant to each piping segment have been refined; however these refinements are relatively minor.
- The role of the existing PSAs and the number and scope of the PSA calculations that are needed to support the consequence assessment has been clarified as a result of insights gained through performance and review of the pilot studies.
- Documentation of the technical basis for assessing failure potential, that is, correlating numerical estimates of failure rates and rupture frequencies to a location's susceptibility to degradation mechanisms has been strengthened.
- A standard 'template' for an NRC submittal has been developed and agreed upon via cooperation of NEI and the NRC to minimize the time to prepare and receive favorable review of future submittals. A summary of these requirements have been added to this report.
- Criteria for the integration of other inspection programs (i.e. non-Section XI) with RI-ISI has been developed.

# 2
# TECHNICAL BASIS METHODOLOGY

The purpose of this section is to summarize the technical basis of the EPRI approach to RI-ISI in support of future applications. Rather than repeat many details that are more fully documented elsewhere, this section briefly summarizes the technical basis and points to appropriate references that address the further details.

If we go back to the beginning of the EPRI RI-ISI program and review the progress that has been made to date in implementing this approach, the elements of the technical basis of the approach include the following items:

- An extensive amount of service experience with piping systems, including documented occurrences of cracks, wall thinning, leaks, and ruptures and results of many piping inspections that have been carried out in several thousand reactor-years of LWR piping system experience.
- A risk informed procedure, developed from insights gained from the service experience and the guiding principles of risk informed PSA applications, to implement RI-ISI that was described in EPRI TR-106706 [7] in sufficient detail to guide the initial pilot plant applications.
- Practical insights gained from the initial pilot applications that employed the EPRI method, as well as the Westinghouse Owners Group method for RI-ISI. In particular, the pilot studies on Fitzpatrick, ANO-2, Vermont Yankee and ANO-1 served to validate the fundamental premises of the approach as well as to provide key insights on how to enhance the method for future applications.
- Key input from ASME Code committees on the basis for the current Section XI requirements and the risk informed basis for revisiting these requirements.
- Lessons learned from questions raised in technical reviews of the methodology and applications of the methodology by the NRC staff and by third parties provided an opportunity to enhance the documentation of its technical basis.
- Results of supporting research sponsored by EPRI in the areas of component integrity and piping system reliability also have provided technical support for future applications of RI-ISI.

The role of the RI-ISI program objectives in shaping the development of the technical approach is discussed in Section 2.1. In Section 2.2, service experience insights that support the approach are provided in greater detail than was provided in EPRI TR-106706. A key ASME white paper that provides part of the technical basis is summarized in Section 2.3, and insights regarding stress corrosion cracking are noted in Section 2.4. Finally, the findings of the third party reviews and the steps taken to address these technical issues have resulted in refinements to the documented basis as explained in Section 2.5.

## 2.1 Technical Objectives of RI-ISI

The high level objectives for the EPRI RI-ISI program outlined in Section 1.2 are expanded here into a set of technical objectives that guided the development and application of the methodology that was originally described in EPRI TR-106706 [7]. As noted earlier in Section 1.2, the high level objectives are to provide a technical approach that:

- Is technically sound, practical, and capable of being consistently applied by plant personnel.
- Provides results that are "process driven" and not be overly dependent on subjective judgments made by a panel of experts.
- Integrates effectively service experience and existing supplemental integrity management programs at the plant, such as those for IGSCC and flow-accelerated corrosion.
- Results in a technically sound "inspection for cause" inspection program.

To support these high level objectives and to minimize the level of effort that utilities require to apply the method and to obtain regulatory concurrence and approval of the resulting changes in the inservice inspection program, there were several additional objectives that were set for the project. These included the needs to:

- Reduce the costs and man-rem exposures associated with those aspects of the piping inspection program that are not beneficial in reducing risks of severe accidents, while focusing inspection resources on areas with the greatest risk reduction benefits.
- Provide a method that utilities can easily implemented in a highly reproducible and cost-effective fashion, and with a minimal dependence on outside consultants.
- Implement insights and results from the plant specific PSA programs that are needed to support risk informed decisions about the inspection program without the need for extensive enhancements to the PSAs and costly and time consuming computations.
- Balance the considerations of providing sufficient quantitative risk estimates to support decision making without burdening the process with undue concern for large uncertainties inherent in passive component reliability estimation.
- Provide approximate scales to measure the relative potential for pipe failure in different pipe segments, and the relative impact of these pipe failures on the risk estimates of core damage frequency and large early release frequency.
- Provide an approach that utilities can flexibly apply on a range of piping system scopes to reduce the investment threshold needed to obtain the benefits of RI-ISI.

These objectives presented a major challenge in developing the RI-ISI methodology. It was recognized early that quantification of failure rates and rupture frequencies of passive components such as piping systems was subject to large uncertainties. In addition, it was recognized that some work was needed to modify existing PSAs to support the evaluation of pipe rupture consequences in terms of conditional core damage probabilities and those of large early releases, whose estimates were also known to be associated with large uncertainties. In consideration of the fact that a full scope application of RI-ISI could involve the evaluation of many thousands of inspection locations, a conscious decision was made not to require many thousands of estimates of pipe rupture frequencies, conditional core damage probabilities, and

conditional large early release probabilities that a "brute force" probabilistic program would require. Instead, it was decided to discretize the problem into three categories of rupture potential, high, medium, and low, and four categories of consequence potential, high, medium, low, and none. These discreet categories of pipe rupture potential and pipe rupture consequence were used to define a risk matrix for characterizing the risk significance of pipe locations whose inspection could influence the rupture frequency. Insights from service experience and completed PSAs were used to derive practical approaches to decide how to place each pipe segment in a system into the risk matrix. Instead of fixing sampling percentages to the ASME pipe class, it was decided to anchor such percentages to the range of risk determined by the discreet failure potential and consequence categories. It was concluded that this risk matrix approach was sufficient to support sound decisions regarding which locations to inspect and how to inspect them and that such an approach was indeed risk informed even though application of the method does not require rigorous quantitative analyses. Insights from pilot plant studies and the results from independent reviews bore this out as explained more fully in the sections below.

## 2.2 Insights from Service Experience

### *2.2.1 Service Experience Basis*

The EPRI approach to assessing pipe rupture potential is based on insights from service experience that were briefly summarized in EPRI TR-106706 [7]. A more complete description of the service experience data that provided the basis for these insights at the time when TR-106706 was prepared is presented in references [27,28,29]. These references include work sponsored by EPRI and the Swedish Nuclear Power Inspectorate (SKI) to collect and analyze piping system service experience that cover the first 2,100 operating years of U.S. commercial light water reactor experience with piping system experience through 1995.

Since publication of TR-106706, EPRI has continued its research to develop and analyze databases based on piping systems service experience. Some of the more recent work in this area was published in EPRI TR-110157 [22], EPRI TR-111880 [24], and EPRI TR-110102 [25].

The service experience summarized in references [27,28,29] identified a total of 119 events that were classified as "ruptures" which included major pipe ruptures, severed pipes and any event whose leak flow rate exceeded 50 gpm. This data excluded components other than pipes and welds in piping systems such as valve and pump bodies, gaskets, compression fittings, seals, heat exchangers and other system components besides pipes and welds. The rupture events discussed in TR-106706 included the following failure mechanisms: flow accelerated corrosion (erosion/corrosion), design and installation errors, maintenance errors, water hammer events, and other "unknown" causes in which the cause was not listed in the event report of the database described in reference [29].

The discussion in TR-106706 did not include a complete listing of all the failure mechanisms in this service experience that were responsible for the 119 rupture events in reference [29]. The original data set from reference [29] of 119 rupture events is delineated into failure mechanisms in Table 2-1 together with the results of a more recent analysis of this data set that was obtained in references [23,24]. As seen in this table, the only degradation mechanisms that were identified as producing rupture events from the data set in reference [29] were flow accelerated corrosion and corrosion attack.

The service experience reflected in Table 2-1 indicates that all experienced pipe failures, which include both leaks and ruptures (includes leaks >50 gal per min.) are due to a well defined set of failure mechanisms that can be placed into several broad categories:

- Damage or degradation mechanisms such as corrosion, thermal fatigue, IGSCC, etc.
- Design and construction errors and defects.
- Severe loading conditions such as water hammer, over-pressurization, frozen pipes, vibration fatigue and human error.
- Combinations of severe loading conditions and degradation mechanisms or design and construction defects.

Of course, only the degradation mechanism category and certain types of design and construction defects are amenable to prevention via NDE inspections. Augmented inspections for IGSCC and FAC are also geared to finding flaws in welds and pipe base metal resulting from degradation. Severe loading conditions can cause pipe leaks and ruptures if the applied static or cyclic loads exceed the pipe capacity, whether or not there are any flaws present. As noted earlier, it is extremely questionable whether inspections have any impact on the probability of pipe ruptures due to severe loading conditions, unless the capacity of the pipe to withstand these transient loads has been degraded by a previously acting degradation mechanism. So the results from Table 2-1 provide an important perspective on the rather limited role that in-service inspection programs play in maintenance of piping system integrity in the sense that only the degradation mechanism category are addressed. There are a wide set of design and operational issues that influence the full range of pipe failure mechanisms that are not necessarily amenable to resolution through the inspection program. The results also impact the range of possible risk impacts of changes introduced by risk informed inspection programs.

A review of the service experience and the resulting insights were recently discussed in EPRI TR-110157 [22]. Figure 2-1 adapted from this reference shows the quantitative basis for the assignment of degradation mechanisms to high, medium and low rupture potential categories associated with the EPRI RI-ISI method. In this analysis, the degradation mechanisms listed in the high rupture potential category (erosion-corrosion) were found to have average rupture frequencies around $10^{-2}$ per reactor year, while each of the remaining degradation mechanisms amenable to inspection were found to have an average frequency of one to two orders of magnitude less than this value. These frequency estimates are averaged over the population of U.S. LWRs, which covers four reactor vendor groups, and any plant to plant, system to system, or segment to segment variabilities that may exist in rupture frequencies. The categories referred to as "other," "design and construction errors" and "unknown" were also found to have significant frequencies of causing ruptures, in the range of $10^{-3}$ to $10^{-2}$ per reactor year.

As seen in Figure 2-1, degradation mechanisms that are amenable to inspections as means of failure or rupture prevention are only partly responsible for the experienced pipe ruptures. Of the degradation mechanisms that have produced pipe ruptures to date, erosion corrosion (FAC) is seen to have the greatest pipe rupture frequency. Corrosion is found to have about an order of magnitude lower frequency and the remaining degradation mechanisms almost two orders of magnitude less frequent than FAC. Hence, Figure 2-1 shows that the degradation mechanisms listed in the high rupture potential category in the EPRI method are generally more likely to result in pipe ruptures than the degradation mechanisms listed in the medium category.

Design and Construction errors are listed in Figure 2-1 as amenable to inspection in the sense that there is the potential for discovery during inspection in the rare event that a selected location happens to include one. However, there is no way to pre-select which locations may have such problem welds. In addition, experience has indicated that many of these data points belong to one of the other categories.

In Figure 2-1, all rupture frequencies were estimated as the ratio of the observed rupture events to the population reactor years of experience of approximately 2,100 reactor years. For those mechanisms with zero ruptures a Bayes update procedure was employed as discussed in reference [22] and refined in reference [23].

**Table 2-1**
**Service Experience with Leaks and Ruptures from Different Degradation Mechanisms**

| Degradation | Failure Mechanism | | Type of Ref. [29] Database Failure | | | Ref. [24] Database Type of Failure | | |
|---|---|---|---|---|---|---|---|---|
| Type | I.D. | Description | All | Leak | Rupture | All | Leak | Rupture |
| Degradation Mechanism | SC | Stress Corrosion Cracking | 166 | 166 | 0 | 151 | 151 | 0 |
| | TF | Thermal Fatigue | 38 | 38 | 0 | 38 | 37 | 1 |
| | E-C | Erosion Cavitation | N/A | N/A | N/A | 12 | 12 | 0 |
| | CF | Corrosion Fatigue | 14 | 14 | 0 | 11 | 11 | 0 |
| | E/C | Erosion Corrosion or Flow Accelerated Corrosion | 295 | 276 | 19 | 201 | 183 | 18 |
| | COR | Corrosion Attack | 72 | 69 | 3 | 65 | 64 | 1 |
| Severe Loading | VF | Vibration Fatigue | 364 | 339 | 25 | 312 | 298 | 14 |
| | D&C | Design & Construction Defects * | 192 | 177 | 15 | 166 | 152 | 14 |
| | WH | Water Hammer | 35 | 20 | 15 | 27 | 18 | 9 |
| | HE | Human Error | N/A | N/A | N/A | 14 | 13 | 1 |
| | OVP | Overpressure | N/A | N/A | N/A | 6 | 3 | 3 |
| | FP | Frozen Pipes | N/A | N/A | N/A | 3 | 1 | 2 |
| Others | OTH | Others | 43 | 35 | 8 | N/A | N/A | N/A |
| | UNK | Unreported Cause | 292 | 258 | 34 | 139 | 133 | 6 |
| All | | All Failure Mechanisms | 1511 | 1392 | 119 | 1145 | 1076 | 69 |

* Includes SKI categories "construction defects" and "design-dynamic loads". N/A - not applicable - classification not used in database.

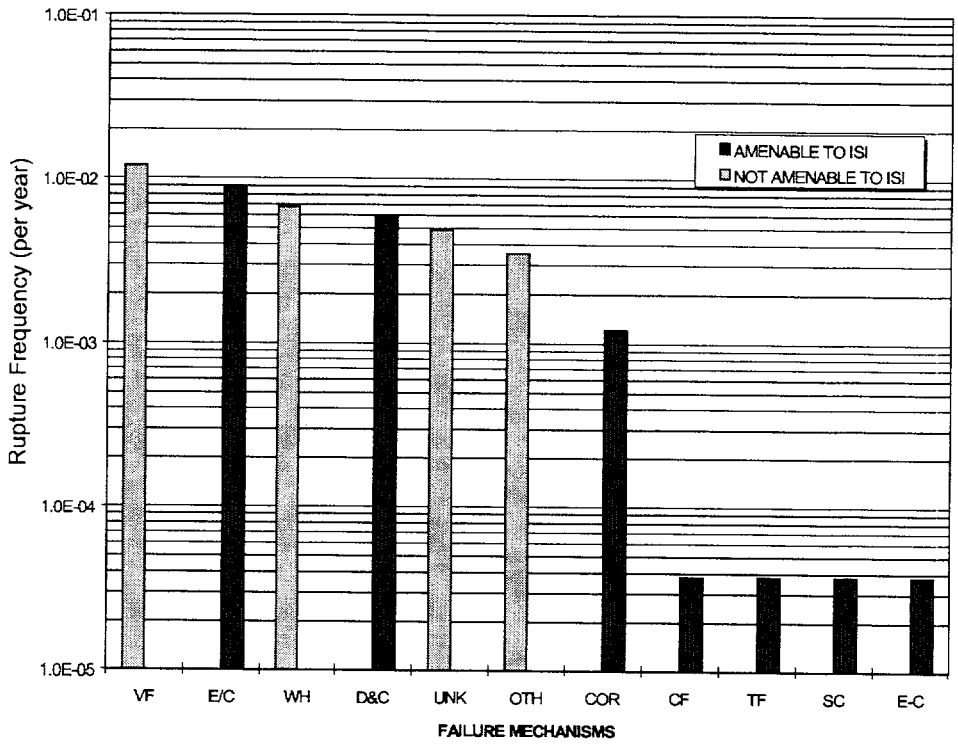


**Figure 2-1**
**Average Frequencies of Pipe Ruptures from Different Failure Mechanisms Through 1995 from Reference [22]**

### *2.2.2 Service Experience Insights Developed Since EPRI TR-106706*

The data from reference [29] was re-examined to support an EPRI task to estimate failure rates and rupture frequencies for use in RI-ISI applications as reported in EPRI TR-110161 [23] and TR-111880 [24]. This re-examination led to the reclassification of the some of the events and a breakdown of the data into two pipe size ranges. The reclassification is described in Table 2-1 and its decomposition into different pipe size ranges in Table 2-2. In this more recent analysis, the reference [29] database was reviewed to support independent verification of the EPRI method in the form of quantitative before-after risk comparisons as discussed more fully in reference [23]. The updated analysis was supported by reviewing all the source documents in the database for the 119 rupture events of reference [29] and by contacting utilities in specific cases to resolve issues in interpreting the data. This experience covers about 1,100 pipe failures which include a total of 69 events that were classified as pipe ruptures.

A set of piping system failure rates and rupture rates were developed for this service data breakdown using the following assumptions and approaches [23,24].

- All the failure and rupture data was broken down into two categories of pipe sizes including pipes with diameters less than 2 inches, and the second category for pipes equal to and greater than 2 inches in diameter. This was done to isolate out failures due to socket welds. Service experience has shown that vibrational fatigue dominates the failure potential for socket welded connections. The breakdown of the service experience into pipe size groups is listed in Table 2-2.

- For piping systems subject to erosion corrosion and corrosion, which act on pipe locations that are not associated with welds, failure rates were developed on a failure rate per linear foot of pipe year basis.
- For the remaining degradation mechanisms, which act primarily on welds, failure rates were developed on a failure rate per weld year basis.
- For all the degradation mechanisms above, the frequency of pipe ruptures was determined according to the following model:

$$\lambda\{\text{rupture}\} = \lambda\ \{\text{failure}\}\text{Prob}\{\text{rupture}|\text{failure}\} \qquad \textbf{Eq. 2-1}$$

- Both terms on the right hand side of the above equation were estimated based on a Bayes' update process. The second term on the right hand side was estimated by grouping the failure data with similar characteristics.
- Bayesian prior distributions were developed to represent the state of knowledge on pipe rupture frequency on a reactor year basis that existed when WASH-1400 was developed and assumptions about the decomposition of this frequency into reactor vendor, system group and failure mechanism subgroups. In the Bayes' update, the actual failure and rupture experience was used together with estimates of the quantities of piping and number of welds in the underlying population. The Bayes' approach that was employed is somewhat different than the approach that is typically used to characterize uncertainty in component failure rates in Probabilistic Safety Assessments. The typical approach is to adopt a prior distribution that represents the generic industry performance of the component, and then to update this prior with plant specific evidence to obtain a posterior distribution to represent the specific component's failure rate performance. In this approach, the prior distribution is used to characterize the state of knowledge prior to the collection and analysis of service data for pipe elements that is generic to all reactor types, systems, failure mechanisms, and pipe sizes. Then, industry data for specific combinations of reactor vendor, system group, failure mechanism, and pipe size is used in the Bayes update process to obtain posterior distributions to represent the specific failure rate and rupture frequency set. Hence rather than using the specific plant to characterize the variability of the failure rates and rupture frequency, the variabilities are assumed to be captured by the combination of the reactor vendor, system size, failure mechanism, and pipe size. Otherwise the application of Bayes theorem to characterize uncertainty in failure rates is the same as for other components in a PSA.
- For severe loading type failure mechanisms such as vibration fatigue, water hammer, frozen pipes, and over pressurization, failure rates and rupture rates were estimated on a system year basis. This process was used because the events that result in such severe loading conditions act on full systems or at least major portions of a system that are thermal hydraulically coupled. Hence, if we allocated these failures to welds and feet of pipe, it would not be possible to treat contributions from individual welds, or sections of pipe as independent.
- For degradation type failure mechanisms, failure rates and associated rupture frequencies were developed as unconditional failure rates, and failure rates conditioned on the presence of the physical conditions necessary for the degradation mechanism to exist.
- The time dependent trends in failure rates were investigated. It was determined that vibration fatigue and water hammer have exhibited a statistically significant reduction in frequency

with plant lifetime, whereas statistically significant trends were not apparent with any of the other failure mechanisms except for stress corrosion cracking. For the degradation mechanisms with significant time trends, different failure rates were developed for early plant life and for mature points in plant lifetime. There was an increase in the frequency of pipe leaks due to IGSCC in the mid to late eighties, however, the corrective actions that were taken to address this problem led to significantly lower failure rates after about 1988, with no apparent time trends since that time. Despite this history of time trends in IGSCC failures, the most severe failures in the entire service history for this degradation mechanism have been small leaks and not a single rupture event has been observed. No aging effects were observed with any other degradation mechanism.

As a result of the above assumptions, approaches, and insights, an analysis of service experience was provided as a basis to estimate pipe failure rates and rupture frequencies. These failure rates and rupture frequencies were used in support of examining risk impacts in the EPRI RI-ISI pilot study as described in EPRI TR-110161 [23].

**Table 2-2**
**Service Experience From Revised Database Analyzed by Pipe Size Range**

| Degradation Type | Failure Mechanism | | < 2" Diameter Pipe Type of Failure | | | ≥ 2" Diameter Pipe Type of Failure | | |
|---|---|---|---|---|---|---|---|---|
| | I.D. | Description | All | Leak | Rupture | All | Leak | Rupture |
| Degradation Mechanism | SC | Stress Corrosion Cracking | 31 | 31 | 0 | 120 | 120 | 0 |
| | TF | Thermal Fatigue | 15 | 15 | 0 | 23 | 22 | 1 |
| | E-C | Erosion Cavitation | 1 | 1 | 0 | 11 | 11 | 0 |
| | CF | Corrosion Fatigue | 6 | 6 | 0 | 5 | 5 | 0 |
| | E/C | Erosion Corrosion or Flow Accelerated Corrosion | 72 | 72 | 0 | 129 | 111 | 18 |
| | COR | Corrosion Attack | 23 | 23 | 0 | 42 | 41 | 1 |
| Severe Loading | VF | Vibration Fatigue | 238 | 229 | 9 | 74 | 69 | 5 |
| | D&C | Design & Construction Defects | 90 | 86 | 4 | 76 | 66 | 10 |
| | WH | Water Hammer | 6 | 4 | 2 | 21 | 14 | 7 |
| | HE | Human Error | 7 | 7 | 0 | 7 | 6 | 1 |
| | OVP | Overpressure | 2 | 1 | 1 | 4 | 2 | 2 |
| | FP | Frozen Pipes | 1 | 1 | 0 | 2 | 0 | 2 |
| Others | UNK | Unreported Cause | 50 | 50 | 0 | 89 | 83 | 6 |
| All | | All Failure Mechanisms | 542 | 526 | 16 | 603 | 550 | 53 |

In Figure 2-1 all rupture frequencies were estimated as the ratio of the observed rupture events to the population reactor years of experience of approximately 2,100 reactor operating years. For those mechanisms with zero ruptures, a Bayes update procedure was employed as discussed in reference [22] and refined in references [23,24]. An example uncertainty distribution for a weld failure rate for the SC degradation mechanism developed by this Bayes procedure is presented in Figure 2-2. This figure shows that uncertainties in the service data preclude accurate estimates of failure rates and rupture frequencies, whose estimates are uncertain over a range of about an order of magnitude about the central estimates.

An important result exhibited in Figures 2-1 is the fact that there are important contributions to pipe rupture frequency due to mechanisms that are not amenable to prevention via timely inspection. Such mechanisms include water hammer, vibration fatigue, frozen pipes, over-pressure and unreported causes. From the data presented in Figure 2-3, even if it were assumed that an inspection program could be developed that was 100 percent effective in eliminating degradation type failure mechanisms, there would still be significant plant wide rupture frequencies due to failure mechanisms not amenable to inspections. This effect can be simulated by eliminating the white component from each of the bars in Figure 2-3, leaving rupture frequencies ranging from about 5E-3 to 1.2E-2 per plant year if degradation type mechanisms were eliminated for each of the reactor vendor groups. The key point of this figure is just to show that the inservice inspection program only addresses part of the failure mechanisms responsible for experienced pipe ruptures and that even if the inspection program were 100% effective the plant wide rupture frequencies would still be within a factor of 3 to 5 of their current baseline values. This provides a perspective on the importance and limitations of inservice inspection efforts as a means of managing the risk of pipe ruptures.

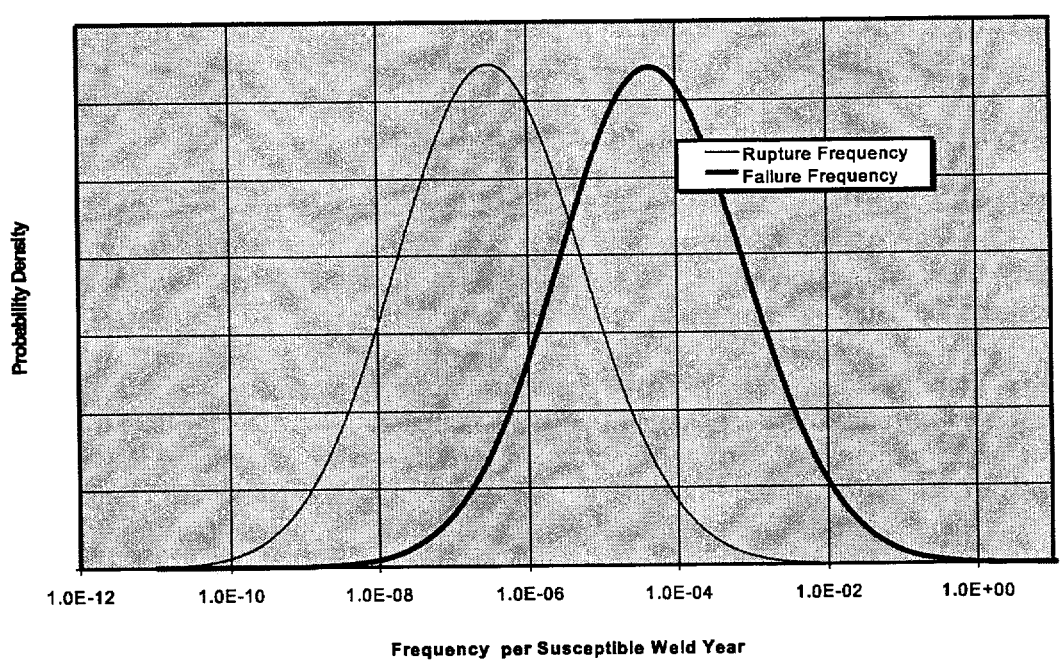


**Figure 2-2**
**Unconditional Failure and Rupture Frequency Uncertainty Distribution for Stress Corrosion Cracking Degradation Mechanism in BWR RCS (Average for all Pipe Sizes)**

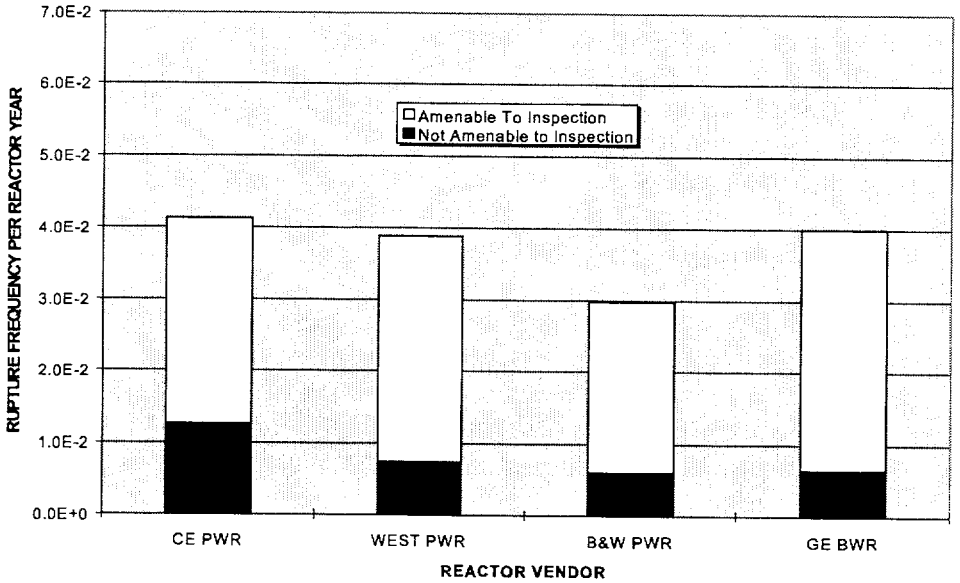


**Figure 2-3**
**Inspection Impact on Plant Rupture Frequencies for Different Vendors (All Pipe Sizes)**

As noted above the frequencies plotted in Figure 2-1 are unconditional frequencies and are expressed in units of events per reactor year. However to correlate the rupture frequency data to its usage in the EPRI approach to RI-ISI, the appropriate frequencies must be assigned to individual segments and also must be expressed as conditional frequencies given the results of the degradation mechanism assessment that is performed in the EPRI RI-ISI approach. In this approach, each segment is evaluated to determine whether the conditions needed for each degradation mechanism are present. Hence, we need to compute the conditional rupture frequencies given the outcome of these engineering analyses.

The actual rupture frequency of a given pipe segment is dependent on many factors, most importantly its susceptibility to degradation but also, including to some extent, the length and number of welds in the segment, the size and schedule of pipe, the system internal and external physical conditions, etc.

Estimation of failure rates requires not only the information on numbers of pipe failures and ruptures due to different failure mechanisms, but also information on the number of piping components and years of service that were "at risk" to produce the observed occurrences. From this information, an approximate order of magnitude relationship between EPRI failure potential categories and the corresponding conditional segment rupture frequencies for failure mechanisms amenable to inspections was developed. These relationships are indicated in Table 2-3 and are applicable to "typical" piping segments with pipe sizes greater than or equal to 2 inches in a CE PWR plant for all piping system categories. This table was developed for segments instead of locations or elements so one could compare corrosion type mechanisms that are measured in terms of failures per foot of pipe, and those for other types of mechanisms that are measured in terms of welds.

Table 2-3 presents segment rupture frequencies in terms of rupture frequency per segment year for different damage mechanisms in order to establish a correlation between the EPRI rupture potential categories and the frequency of occurrence of ruptures in different piping systems in a CE plant for pipe sizes greater than 2 inches in diameter. Four sets of rupture frequencies are listed in this table: two sets of unconditional frequencies, meaning that the frequencies are averaged across all piping segments whether they are susceptible to a failure mechanism or not, and two sets of conditional rupture frequencies. These latter frequencies are conditional on meeting the EPRI criteria for susceptibility to the indicated damage mechanism. These conditional frequencies are more appropriate for correlating the EPRI rupture potential categories for the following reason. Before each segment is placed on the risk matrix, a determination is made whether each location in the segment is susceptible to each possible damage mechanism. For each category of unconditional and conditional rupture frequencies, there are two sets of results, one set listed as minimum and one set listed as maximum. These minimums and maximums cover a range of rupture frequencies for a specific damage mechanism across different systems which is reflected in the service data. The minimum set represents the system in a CE plant that produced the lowest estimate of the segment rupture frequency for the indicated damage mechanism, and the maximum, the system with the highest rupture frequency for the indicated damage mechanism. Hence, for the erosion-corrosion failure mechanism there were unconditional rupture frequencies for different segments across different systems in a CE plant ranging from a minimum of 4E-7 to 2E-4 per segment year. However, when we make the estimates conditional on the satisfaction of the EPRI decision criteria for this failure mechanism, the corresponding conditional rupture frequencies increase to 2E-6 to 5E-3 per segment year. The data analysis employed to develop these rupture frequencies is documented in TR-111880.

Estimates for the low failure potential category are based on the rupture frequencies derived from the service experience for design and construction errors which could occur in any location even when the location is not found subject to any specific degradation mechanisms. These results, which were derived from rupture frequency estimates for CE PWR plants, are indicative of the unconditional and conditional segment rupture frequencies for each of the four U.S. LWR reactor vendors.

As stated earlier and discussed in section 2.2.3, these data points over predict the contribution of design and construction errors. Most likely, large numbers of these data points belong to one of the other data sets. These results are indicative of the unconditional and conditional segment rupture frequencies for each of the four U.S. LWR reactor vendors. The maximum and minimum values in this table refer to the maximum and minimum estimates obtained across each of the system groups in the plant for which separate failure rates, rupture frequencies, weld counts and pipe segment counts were obtained. There are variations in rupture frequencies due to a given degradation mechanism across systems indicating the variations in the extent of degradation that is reflected in the service experience in these different systems.

**Table 2-3**
**Rupture Potential Categorization by Segment**

| EPRI RI-ISI Rupture Potential Category | Applicable Failure Mechanisms | Unconditional ** Segment Rupture Frequencies (per segment year) | | Conditional** Segment Rupture Frequency Given Conditions For Failure Mechanism (per segment year) | |
|---|---|---|---|---|---|
| | | Minimum* | Maximum* | Minimum* | Maximum* |
| HIGH | E/C | 4E-7 | 2E-4 | 2E-6 | 5E-3 |
| MEDIUM | TF, SC, CF, E-C, COR | 3E-7 | 4E-5 | 3E-7 | 7E-5 |
| LOW | D&C | 3E-7 | 9E-6 | 3E-7 | 9E-6 |

* Minimum and maximum across segments in different systems subject to indicated damage mechanism.
** Conditional and Unconditional with respect to the susceptibility to the indicated damage mechanism according to the EPRI damage mechanism criteria.

The above maximum estimates are in reasonable agreement with the estimates used in the derivation of the original rupture potential categories in EPRI risk matrix (see Figure 2-4). As noted in response to NRC RAIs resulting from their review of EPRI TR-106706, the original estimates were based on the unconditional. However, now that we have established a methodology to develop estimates of both conditional and unconditional rupture frequencies, it is apparent that the more appropriate reliability metric to establish this correlation is the conditional rupture frequency given susceptibility to each damage mechanism. This more refined approach also upholds the basic premise of the EPRI damage mechanism categories, which is that the relative rupture frequencies in the high, medium, and low rupture potential categories are approximately one order of magnitude apart.

| POTENTIAL FOR PIPE RUPTURE<br>PER DEGRADATION MECHANISM SCREENING CRITERIA | CONSEQUENCES OF PIPE RUPTURE<br>IMPACTS ON CONDITIONAL CORE DAMAGE PROBABILITY AND LARGE EARLY RELEASE PROBABILITY | | | |
|---|---|---|---|---|
| | NONE | LOW | MEDIUM | HIGH |
| HIGH<br>FLOW ACCELERATED CORROSION | LOW<br>Category 7 | MEDIUM<br>Category 5 | HIGH<br>Category 3 | HIGH<br>Category 1 |
| MEDIUM<br>OTHER DEGRADATION MECHANISMS | LOW<br>Category 7 | LOW<br>Category 6 | MEDIUM<br>Category 5 | HIGH<br>Category 2 |
| LOW<br>NO DEGRADATION MECHANISMS | LOW<br>Category 7 | LOW<br>Category 7 | LOW<br>Category 6 | MEDIUM<br>Category 4 |

**Figure 2-4**
**EPRI Matrix for Segment Risk Characterization**

It is also apparent that the above minimum values create some degree of overlap in the segment rupture frequencies over the three rupture potential categories. This observation is consistent with the expectation that while many different pipe segments may be subject to the same degradation mechanisms, the rates of degradation may be different due to differences between the segments. What this means is that application of the rupture potential categories in certain systems may be conservative because the order of magnitude estimate for the associated degradation mechanism may indeed be much smaller than implied by the EPRI method, which is correlated to the maximum frequency estimates. Since the maximum estimates in the above table are in excellent agreement which the values assumed in developing the EPRI rupture potential categories, this provides a strong validation of the assumed correlation of failure potential categories to rupture frequencies. Furthermore, the results for the minimum values in the above table indicate that assignment of segments in some systems as either medium or high rupture potential may be conservative since the rupture frequency may be relatively low, even though some potential for degradation has been identified.

It is important to note that actual segment rupture frequencies could be substantially different than those estimated above for "typical" and average pipe segments. Such specific pipe segment rupture frequencies are dependent on many factors, that can vary from vendor to vendor, system to system and segment to segment. The fact that the EPRI approach to RI-ISI is applied on a system by system basis minimizes the need to know absolute rupture frequencies.

### 2.2.3 Limitations of Service Experience Data

While EPRI has placed significant emphasis on the development of insights from service experience, we are well aware of some limitations of the underlying database. EPRI as well as others have invested considerable resources in compiling event databases from available industry records and reports that have documented various problems and failures in piping systems. This process is subject to the limitations of essentially any data analysis of this sort, including incomplete and difficult to interpret event reports, incorrect information recorded from specific reports, and evolving understanding of degradation mechanisms since the original reports were filed. To that end, EPRI continues to sponsor projects to expand, refine, and enhance the service experience database. The insights presented in this section are supported by the preponderance of the evidence compiled to date. We are aware that the classification and analysis of service data is subject to different interpretations due to the uncertainties and ambiguities that were left in the original records. In this section we have noted several interpretation issues such as the number of events with no reported degradation mechanisms and the indications that some events may have been misclassified as design and construction errors. Despite these limitations, we believe that a technically sound basis for a risk informed in-service inspection process must be accountable to the available evidence on piping system reliability which starts with a careful analysis of the service experience data.

### 2.2.4 Conclusions From Analysis of Service Experience

In summary, the EPRI approach to RI-ISI includes a qualitative and deterministic assessment of the conditions necessary for active degradation mechanisms based on engineering criteria for determining susceptibility to each mechanism. There is high confidence that if these engineering criteria are not met, the segment in question is not susceptible for experiencing a flaw, leak or rupture due to that mechanism. Service experience provides a quantitative basis for correlating

approximate order of magnitude rupture frequencies with each of the EPRI rupture potential categories high, medium and low. As long as segments in a given system are being classified on the risk matrix, there is a sound quantitative basis for concluding that segments in the high, medium and low rupture potential categories will be rank ordered with respect to quantitative rupture likelihood. In the early look at service experience when preparing EPRI TR-106706 there was a reasonable basis to support the conclusion that segments in a given system ranked in the high rupture potential category would have at least an order of magnitude greater rupture frequency than segments in the medium category, and those in the medium category, an order of magnitude more likely to rupture than those in the low category. There were several reasons why numerical rupture frequency ranges were not listed in EPRI TR-106706 including the view that it was not necessary to support development and application of a technically sound approach to implementing RI-ISI.

More recent work in piping reliability assessment from the service experience confirms the basis of the high, medium and low rupture potential categories and the results support the approximate order of magnitude ranking of rupture frequencies among segments in the three failure potential categories. Moreover, there are important contributions to pipe rupture frequency due to severe loading conditions that are essentially independent of the inspection program. The existence of these failure mechanisms that are not influenced by changes in the inspection program tends to limit the risk changes that could result from changes in inspection strategy. The service experience to date provides a strong indication that the frequency of pipe ruptures is only very weakly correlated to the inspection processes. These possibilities are reflected in the EPRI method by recognizing that there is some potential for pipe rupture even when no degradation has been identified.

Based on an awareness of limitations in the existing service data and the need to track and trend changes in future piping system performance, EPRI recognizes the continuing need to update and enhance the service experience data and to incorporate lessons learned from this experience into the RI-ISI inspection programs.

## 2.3 Summary of ASME White Paper 92-01-01, Rev. 1

The basis for an inspection sample of 10 percent in Code Case N560 is documented in the American Society of Mechanical Engineers (ASME) white paper prepared in support of ASME Code Case N560 (i.e. ASME Section XI Task Group on ISI Optimization Report No. 92-01-01, Revision 1, dated July 1995) [33].

The Task Group considered the exceptional performance history of examination category B-J piping welds during actual service, which included an industry survey conducted by the Task Group, indicating that inspections of approximately 10,000 such welds under the current ASME Section XI 25 percent sampling requirement, in 50 responding plants, has revealed only five innocuous indications (5) other than IGSCC. The only significant service-induced flaws that have been observed in Class 1 piping have been detected primarily by other augmented inspection programs, designed to address specific, known degradation mechanisms, such as IGSCC. It was thus reasoned that, if an ISI program could be designed which looks specifically for such active degradation mechanisms in piping components, and if this program also took into account potential differences in the consequences of failure of various postulated failure

locations (i.e. a risk-informed approach), then a more meaningful inspection program could be designed, with a smaller inspection sample than the current 25 percent Code requirement, provided that sample include inspection volumes of sufficient magnitude to capture the potential degradation mechanism. That is a reason why, although ASME Code Case N560 allows for a reduction in the number of sampling locations, it also requires for an expansion in inspection volume to assure that such issues as counterbore regions which are missed by existing regulation are captured by the N560 process.

The judgment of the ASME Section XI Task group was that a 10 percent sample, selected in a risk-informed manner, would provide at least an equivalent level of protection against piping system leakage or rupture, as the current Code 25 percent sample and selection criteria. In addition, this sampling criteria base upon the exceptional performance history of B-J piping (minus IGSCC) reduces the undue burden (worker exposure, cost and unreliable generation) placed upon licensees as a result of inspections which have been shown by reference [6] to not be cost effective.

There is little technical basis for the current 25 percent requirement, other than the fact that it is 100 percent divided by 4. That is, Section XI originally imposed a 100 percent inspection over forty years, which equates to 25 percent each ten year interval. It is interesting to note from a historical as well as technical perspective that the forty year lifetime of power plants is as much an accounting requirement (i.e. equipment depreciation) as it is a design or operational consideration. In an ASME Code change in the late 1970s this requirement was changed to required inspection of the same 25 percent each ten years.

There is likewise little technical basis for the current selection criteria. Relatively high stressed welds are selected from the ASME Code stress report for the piping system. However, history has shown that welds selected in this manner do not correlate with the few instances in which field cracking or leakage has been observed in Class 1 piping. ASME Code stress analysis rules generally only address the fatigue degradation mechanism, and if the loads were properly identified and included in the stress reports, then they are shown to meet Code stress limits which contain large safety margins. Where failures have occurred in the twenty-plus year operating history of nuclear power plants, there have been instances in which either unexpected loads or degradation mechanisms have been present, and these cannot be predicted from a review of high-stress locations in a stress report.

The real measure of protection against catastrophic failure of a piping system component is the combination of good design and leak-before-break piping properties. All of the service induced failure mechanisms which effect nuclear power plant piping except one (flow accelerated corrosion) have been shown to be of a gradually progressing nature, which inevitably produce detectable leakage before significantly reducing the inherent safety margins of the piping relative to gross rupture. The combination of periodic leak tests required by Section XI, in conjunction with continuous leakage monitoring requirements for all primary coolant systems during operation has proven to be more than adequate protection against a large pipe break. The potential for flow accelerated corrosion, which has caused large pipe breaks without prior leakage, is minimal in Class 1 systems. Special consideration of the FAC degradation mechanism is included for this reason in the Code Case N560 evaluation rules.

As discussed, the safety function of interest with respect to inservice inspection is that of reactor coolant pressure boundary integrity. Listed below are those attributes necessary for fulfilling this requirement, as well as the impact of N560 on meeting this objective:

| | |
|---|---|
| Quality Design | No Change |
| Quality Fabrication | No Change |
| Quality Construction | No Change |
| Quality Testing | No Change |
| Quality Inspection | Fewer inspections conducted at more appropriate locations using better techniques, and as necessary, expanded volumes |

As can be seen from the above summary, those attributes that are critical in defining and maintaining sufficient safety margins are unchanged except for a subset of the pressure boundary volumetric examinations. In this case, the reduced number of volumetric Section XI examinations are based upon the exceptional performance history of Class 1 components. In addition, the new Section XI locations are more appropriate, usually involving larger inspection volumes, using better inspections methods.

During the development of ASME Code Case N560, input was sought from other ASME Code committees and individuals experienced in risk-informed evaluation and nuclear power plant performance. Specifically, a consensus of the Section XI Working Group on Implementation of Risk-Based Examination was that the 10 percent sample was reasonable for Class 1 piping, and the code case in its current form was approved unanimously by all ASME Code groups up to and including the ASME Main B&PV Committee.

The industry survey conducted by the ASME Task Group on ISI Optimization which was discussed above, identified that only a minimal number of indications (5) were detected by the ASME Section XI Class 1 piping weld inspections (other than IGSCC). A review of these indications revealed that none of the five would have developed into through-wall leaks had they not been found by ISI, since they were non-propagating outside diameter (OD) or sub-surface indications. Thus, even if none of the ASME code required inspections had been performed during the past twenty years, no additional instances of primary coolant leakage would have occurred. Conversely, a number of instances of leakage due to unexpected degradation mechanisms (such IGSCC and thermal fatigue) have occurred. They just did not occur in the 25 percent weld samples that are required to be inspected by ASME Section XI or were primarily identified via the augmented inspection. It is believed that, by focusing the inspections on known degradation mechanisms such as those which have led to leakage in operating plants, the N560 inspection program will actually result in a decrease (rather than an increase) in primary coolant leakage rates.

In concert with the performance based implementation of ASME Code Case N560, licensee have a number of monitoring and feedback mechanism to assure that the basis of N560 implementation is consistent with plant operation. They include:

Section XI Required Monitoring and Feedback

- Pressure and leak testing of all class 1, 2 and 3 components,
- Inspection results shall be compared to Preservice Inspection (PSI) results and prior ISI results,
- For flaws exceeding acceptance criteria (IWX-3500),
  - Increase the sample population to include those items scheduled for this and the next scheduled period,
  - If additional flaws are found in the expanded sample population, inspect all items of similar design, size, and function,
  - Remove, repair, replace or analytically evaluate,
  - For flaws not exceeding acceptance criteria, items shall be examined for the next three inspection periods.

Other monitoring and feedback mechanisms include:

- Unidentified reactor coolant leakage shall not exceed Technical Specification requirements (typically 5 gpm),
- Identified reactor coolant leakage shall not exceed Technical Specification requirements (typically 25 gpm),
- Feedwater nozzle bypass flow monitoring,
- Containment monitoring,
- Radiation monitoring,
- Temperature monitoring,
- Pressure monitoring.

The N560 selection process has two key ingredients. Those are 1) a determination of each location's susceptibility to degradation and 2) an assessment of the consequence of the location's failure. These two ingredients not only assure defense in depth is maintained, but actually increased over the current process. First, by evaluating a location's susceptibility to degradation, the likelihood of finding flaws or indications that may be precursors to leak or ruptures in the reactor coolant pressure boundary is increased. Second, the consequence assessment effort has a single failure criterion so that, no matter how unlikely a failure scenario is, it is ranked high if, as a result of the failure, there is no mitigative equipment available to respond to the event. In addition, the consequence assessment takes into account equipment reliability so that poor performing equipment is not credited as much as more reliable equipment.

Finally, from an historical perspective, nuclear power plants were originally constructed and operated with the explicit consideration that volumetric and surface examinations on Class 1 piping systems would not be conducted due to the radiation fields workers would be exposed to necessitated by these types of examinations. With the occurrence of a number of failures, NRC requested the ASME to develop standards for inservice inspection in the early 1970s. In parallel with this effort, plant design (e.g. minimization of socket welds), material selection, as well as

augmented inspection programs defined where to look for specific degradation, were also developed. Analyses, ([8,10] identified that in general augmented programs addressed high and medium risk location while Section XI had numerous inspections identified in low risk areas.

As a supplement to the aforementioned discussion, the following provides an assessment of the value-impact of the existing Section XI process [54]. If we define value as:

$$V = A * B * (C\ D) * E * F, \text{ where} \qquad \textbf{Eq. 2-2}$$

A = number of units (100 units),

B = years remaining per unit (20 year),

C = CDF due to Class 1 piping with no inspection (1E-06 per year, from reference [6], no ISI),

D = CDF due to Class 1 piping due to existing Section XI 25 percent sampling (1E-08 per year)

E = population dose factor (see References [55, Table 5.4],2E6 person-rem ),

F = dollar equivalent per unit dose ($2,000 per person-rem).

Thus,

V = 100 * 20 * 9.9E-7 * 2E6 * 2,000

= $7.9E6

If we then take impact to be defined as follows:

$$I = A * B * J, \text{ where} \qquad \textbf{Eq. 2-3}$$

A = number of units (100 units),

B = years remaining per unit (20 year),

J = cost per year for implementing Section XI Class 1 inspections ($150,000 per year),

Thus,

I = 100 * 20 * 150,000

= $300E6

The above yields a V-I Ratio = 0.3

With these very conservative estimates, the existing Section XI requirements fail to meet any reasonable value-impact criteria and the undue burden placed upon the industry is obvious. Even if the industry were able to reduce Class 1 inspections costs and exposure by a factor of two, the value-impact ratio would still be substantially below 1.0.

The above analysis is based upon the assumption that the existing Section XI 25 percent sampling criteria provides for reduction in CDF of two orders of magnitude. N560 allows for a 10 percent sampling. If we conservatively assume that N560 only captures 40 percent of the risk reduction benefits of existing Section XI (i.e. due to a 60 percent reduction in the number of inspections) while not crediting the better locations (targeting specific potential degradation) and coverage (i.e. larger inspection volume) the change would be as follows:

Value with 10 percent = Value with 25 percent * 0.60 = $5E6

Impact with 10 percent = Impact with 25 percent * 0.40 = $120E6

V-I Ratio = 0.04

Again, even if the industry could reduce its inspection costs and exposures by a factor of two, the V-I ratio is substantially below 1.0.

The above analysis and discussion would tend one to question the appropriateness of requiring a Section XI inspection program at all. 10CFRPart20 requires that worker exposure be maintained as low as reasonably achievable. The requirements of 10CFRPart20 and the mandated ASME Section XI examinations appear to be in conflict. However, it is EPRI's philosophy that even given the above, prudency dictates that defense in depth and a reasonable balance between mitigation and prevention be maintained. As such, although many analyses question the viability of the Section XI process, we believe a sampling percentage of 10 percent for Class 1 piping will provide a significant reduction in undue burden, reduce worker exposure consistent with the requirements of 10CFRPart20, while providing a robust inspection program from a safety as well as plant operability perspective.

## 2.4 Integration of NUREG-0313 and RI-ISI

Generic Letter 88-01 [36] and NUREG 0313, Revision 2 [37] provide the NRC position on austenitic stainless steel piping potentially susceptible to IGSCC in BWRs. These requirements apply to piping of 4 inch diameter and greater exposed to reactor water at greater than 200 degrees F.

The relevance of these documents and associated requirements to a risk-informed inservice inspection program consist of two issues. That is, augmented inspection requirements and the susceptibility (or lack of) of piping material to IGSCC. The NRC and industry are currently revisiting NUREG-0313 and its requirements [48]. As such, the current revision of this EPRI report reflects an interim position on IGSCC susceptibility and inspection requirements as they pertain to RI-ISI. Later revision to this report will reflect the results of the NRC and industry interactions on this issue.

Table 2-4 provides a summary of the inspection requirements for piping included within the scope of the NUREG-0313 program. As can be seen from this Table, piping assigned to Category A is considered not to be susceptible to IGSCC due to the use of resistant materials. The inspection requirements for this category essentially mirror the existing Section XI requirements at the time NUREG-0313 was issued.

EPRI developed a report *Use of Risk-Informed Inspection Methodology for BWR Class 1 Piping* [49]. This report reviews:

- Laboratory test results on IGSCC resistance of low carbon, nuclear grade stainless steels in simulated BWR water tests,
- Effect of water purity on IGSCC resistance of austenitic stainless steels,
- Laboratory studies on the effect of residual stress remedies,
- Field performance of nuclear grade stainless steels,
- Field performance of the application of residual stress remedies.

The relevant conclusion of this study for use in the RI-ISI program is that Category A piping should be considered not susceptible to IGSCC. As such, during the failure potential assignment step of the EPRI RI-ISI process, these locations will be assigned to the low failure potential category (i.e. no degradation mechanism), unless the location is susceptible to some other degradation mechanism (e.g. thermal fatigue).

From a risk ranking perspective, this will result in these locations being assigned to risk category 4 if combined with a high consequence assignment, risk category 6 if combined with a medium consequence assignment, or risk category 7 if combined with a low consequence assignment.

The number of locations chosen for inspection will be determined by the risk ranking results and whether ASME Code Case N560 or N578 is applied. As the NUREG-0313 program is a licensees commitment outside of the Section XI program scope, licensee will need to assure appropriate notification is conducted. This is discussed in more detail in Section 6.

Locations within the plant that are assigned to NUREG-0313 categories other than Category A (e.g. Category E) shall continue to meet existing NUREG-0313 inspection schedules while NRC and industry interactions continue on this matter.

**Table 2-4**
**Summary of NUREG-0313 Inspection Requirements**

| Description of Weldment | NUREG-0313 IGSCC Category | Inspection Extent and Schedule |
|---|---|---|
| Resistant Material | A | 25% every ten years (12% in 1st 6 years) |
| Nonresistant Material (SI w/in 2 years of operation) | B | 50% every ten years (25% in 1st 6 years) |
| Nonresistant Material (SI after 2 years of operation) | C | All within the next 2 refueling cycles, then all every ten years; (50% in 6 years) |
| Nonresistant Material (No SI) | D | All every 2 refueling cycles |
| Cracked (Reinforced with overlay or mitigated by SI) | E | 50% next refueling outage, then all every 2 refueling cycles |
| Cracked (Inadequate or no repair) | F | All every refueling outage |
| Nonresistant Material (not inspected) | G | All next refueling outage |

## 2.5 Findings of Third Party Reviews

In 1997, EPRI sponsored two independent peer reviews to examine the technical adequacy of the RI-ISI methodology as described in the Interim Methodology Report TR-106706 [7]. The first was tasked to review the methodology from the view point of PSA technology and to examine whether the guiding principals of the EPRI PSA Applications Guide [21] were followed. The second was tasked to examine the methodology from the view point of the treatment of degradation mechanisms and deterministic aspects of piping integrity. The technical findings from these reviews were published and made available for public and NRC review [19,20].

### *2.5.1 Results of Adequacy Review from View Point of PSA Technology*

The major findings and recommendations from this review are:

#### Review Findings

- The overall technical approach to RI-ISI, as described in the review meetings and in published and unpublished documents, appears to be technically sound and robust and has the potential for producing an effective risk-informed inspection process.
- The current report (TR-106706 [7]), which documents the RI-ISI approach to be used in pilot applications, will need to be expanded to provide the technical basis for justifying the validity of the approach.
- The reviewers agree with the decision to rely on service experience rather than probabilistic fracture mechanics.
- The reviewers find that, when the EPRI method and its basis is fully described, it will qualify as a semi-quantitative PSA application that is consistent with the guiding principles of the EPRI PSA Applications Guide [21].
- The approach to RI-ISI is based in part on insights from operating experience with pipe failures, leaks and flaws, and current understanding of probable causes and failure mechanisms. This understanding and the ability to account for experienced failure mechanisms is extremely important to the credibility and effectiveness of any inservice inspection program, whether it is modified by the risk informed process or not.

#### Recommendations

- A technical basis document should be developed that completely documents the basis of the RI-ISI approach that exists. A discussion of how the PSA Application Guide was applied and the results and responses to this review should be addressed in this document.
- The RI-ISI approach should be presented in a manner that would make the quantitative PSA basis of the approach more visible and transparent. The option should be provided to derive the consequence (risk impact) categories by computing the conditional core damage probability in lieu of the proposed rules that are derived from these probabilities.

- The opportunities for safety enhancement or risk reduction as a result of applying the EPRI method, as well as those for cost reduction, need to be better explained. This includes the questions of how the inspection process for segments in different risk categories would be changed and how the cumulative risk impacts of all changes in the ISI program will be determined.
- The operating experience with pipe breaks, leaks, flaws and associated failure mechanisms and how the resulting insights have been applied need to be more fully documented.

### Response to Adequacy Review from View Point of PSA Technology

EPRI recognizes that the interim report that was reviewed, TR-106706 was not intended to fully document the technical basis for the approach, but only to describe the RI-ISI procedures that were being implemented and tested in the pilot plant studies. Since receipt of these review comments, EPRI has expanded the documentation basis of the RI-ISI program via NRC submittals of pilot plant applications, responses to NRC requests for additional information, and publication of EPRI technical reports, including this report.

## *2.5.2 Results of Review of Treatment of Degradation Mechanisms*

The principal findings of the this review are as follows:

On the whole, the review by the various participants concluded that the degradation mechanisms outlined in EPRI TR-106706 capture most of the active mechanisms that potentially affect nuclear power plant piping. A few additional observations are discussed below with respect to thermal fatigue, vibrational fatigue, and corrosion related mechanisms. In addition, a reorganization of some of the mechanisms is proposed.

- Subdivision of thermal fatigue into thermal stratification, cycling, and striping is appropriate.
- Criteria for thermal transients is reasonably conservative and could be made more realistic by consideration of the severity of thermal transients.
- Slight reformulation of the delta temperature criteria proposed to address introduction of hot fluids into cold pipes.
- Concurrence that vibrational fatigue should be treated outside the RI-ISI program.
- Proposed rearrangement of corrosion cracking, primary water stress corrosion cracking and intergranular stress corrosion cracking into a general category called "stress corrosion cracking."
- Proposed category called "localized corrosion" that includes MIC, Pitting, and Crevice Corrosion.
- A new table summarizing proposed reorganization of degradation mechanisms and the basic screening criteria to deciding whether such mechanisms can be potentially active in a piping segment were proposed to replace a similar table in EPRI TR-106706.

## Response to Review Treatment of Degradation Mechanisms

EPRI decided to adopt the recommendations made in this review. These recommendations are reflected in this report as documented in Section 3.4.

# 3
# METHODOLOGY DESCRIPTION

## 3.1 Overview of Methodology

The EPRI methodology for RI-ISI is depicted in Figure 3-1. This figure reflects the basic elements of the methodology as documented in the interim report TR-106706 [7], as well as refinements that were made to address specific requirements of Regulatory Guides 1.174 and 1.178 [2,4] and lessons learned from the pilot studies. The EPRI RI-ISI procedure is implemented by following a six step process:

1. Definition of RI-ISI program scope.
2. Failure Mode and Effects Analysis (FMEA) of Pipe Segments.
   - Evaluation of consequences of pipe failures.
   - Evaluation of pipe failure potential.
3. Characterization of risk segments.
4. Inspection element selection.
5. Evaluation of risk impact of changes to inspection program.
6. Incorporation of long term RI-ISI program.

The first step is to decide on the scope of the RI-ISI program. Options include:

- Large scope applications that include ASME Class 1, 2, and 3 and other piping systems important to safety as described in ASME Code Case N-578 [13];
- Selection of individual piping system applications, or alternative piping system scope as allowed by ASME Code Case N-578, or
- Class 1 piping systems applications limited to Examination Category B-J welds in as described in ASME Code Case N-560 [11].

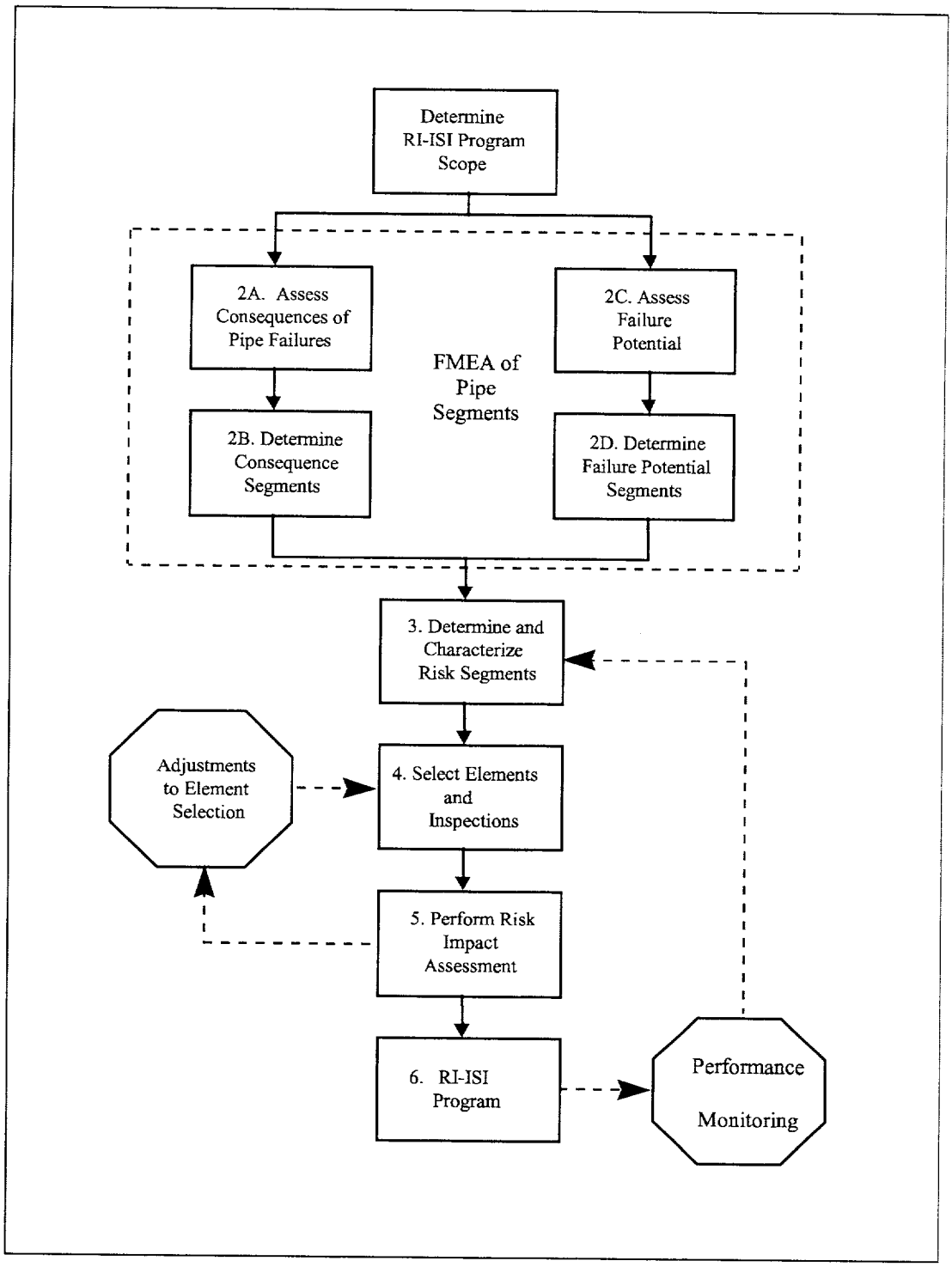


**Figure 3-1**
**Overview of EPRI RI-ISI Methodology**

It is assumed that any Class 1, 2, or 3 systems not selected for RI-ISI program scope will be retained within the current Section XI inservice inspection program. An additional decision that must be made to set the scope of the RI-ISI program is to decide whether piping systems and degradation mechanisms covered within augmented inspection programs, for example whether those programs for IGSCC (category A welds only), or MIC, will be incorporated into the RI-ISI program, or left unchanged. Those augmented programs that may be subsumed are discussed in more detail in Section 6.5. The user may apply the EPRI RI-ISI program to any scope of piping systems depending on which elements of the current inspection programs are to be changed to a risk informed process. Further guidance for determination of program scope is provided in Section 3.2.

The second step is to perform an FMEA of the piping systems within the RI-ISI program scope. In Figure 3-1 this step is broken down into four distinct sub-steps as this is where most of the resources are applied in implementing a risk informed inspection program. The FMEA is normally performed on a system by system basis and leads to the definition of piping segments that have common potential for failure and common consequence potential. Segments with the same failure potential and same consequence potential are combined into risk segments in step 3.

The consequences of pipe rupture are measured in terms of the conditional probability of core damage given a pipe rupture (CCDP) and the conditional probability of large early release given a pipe rupture (CLERP). These measurements require quantitative risk estimates obtained from the plant specific PSA models available for the given plant. These estimates are used to calibrate tables that are applied to rank pipe rupture consequences for each location in the piping system. Once these numerical risk estimates are obtained, consequence ranking of pipe ruptures can be determined by application of these tables, without extensive PSA computations. This is accomplished by identifying the impacts of the pipe rupture in terms of initiating events, system mitigation, containment response, and time of exposure of the pipe rupture conditions prior to detection and repair of the affected pipe element. Evaluation of consequences is implemented in steps 2A and in step 2B. The system piping is organized into contiguous segments, each having the same consequence potential. Guidance for performance of consequence assessments is provided in Section 3.3.

In a similar fashion, failure potential of each pipe location needs to be assessed in terms of the relative potential for pipe rupture. The basis for correlating qualitative potential, which is determined by evaluating physical conditions needed for various degradation mechanisms, to quantitative estimates of pipe rupture frequency is a database of piping system failure rates derived from service experience. Guidance for performance of steps 2C and 2D is provided in Section 3.4.

As discussed previously, piping segments with the same failure potential and consequence potential are defined as "risk segments."

Pipe elements within each segment are candidate locations to be selected for the inspection program based on the risk characterization of the segment to which each element belongs. Elements can be specific welds or locations of pipe that have been evaluated for susceptibility to a spectrum of damage mechanisms. In step 3, each segment is placed onto the appropriate place on the EPRI segment risk characterization matrix as described in Figure 3-2 based on three broad categories of failure potential (high, medium, or low) and four broad categories of consequence

potential (high, medium, low, or none). Based on the combination of failure potential and consequence categories, each location on the risk matrix is assigned to one of three broad risk regions for N-578 and seven risk categories for N-560 applications that are correlated to ranges of absolute levels of core damage frequency (CDF) and large early release frequency (LERF). Guidance for step 3 is provided in Section 3.5.

In step 4, the revised set of inspection requirements is defined. Specific locations on the risk matrix are selected for the inspection program based on the segment's risk ranking and a set of practical considerations that bear on the feasibility and effectiveness of the specific inspection. The percentage of locations selected for inspection is defined in Coda Cases N-560 and N-578. For those locations selected for NDE inspections, the inspections are focused on the type of degradation mechanism identified in step 2. The ability to focus the examination on specific damage mechanism(s) enhances the effectiveness of the retained inspections. All locations, regardless of risk classification and element selection results are subjected to current pressure and leak testing requirements. Guidance on the element selection process in step 4 is provided in Section 3.6.

| POTENTIAL FOR PIPE RUPTURE<br>PER DEGRADATION MECHANISM SCREENING CRITERIA | CONSEQUENCES OF PIPE RUPTURE<br>IMPACTS ON CONDITIONAL CORE DAMAGE PROBABILITY AND LARGE EARLY RELEASE PROBABILITY | | | |
|---|---|---|---|---|
| | NONE | LOW | MEDIUM | HIGH |
| HIGH<br>FLOW ACCELERATED CORROSION | LOW<br>Category 7 | MEDIUM<br>Category 5 | HIGH<br>Category 3 | HIGH<br>Category 1 |
| MEDIUM<br>OTHER DEGRADATION MECHANISMS | LOW<br>Category 7 | LOW<br>Category 6 | MEDIUM<br>Category 5 | HIGH<br>Category 2 |
| LOW<br>NO DEGRADATION MECHANISMS | LOW<br>Category 7 | LOW<br>Category 7 | LOW<br>Category 6 | MEDIUM<br>Category 4 |

**Figure 3-2**
**EPRI Matrix for Segment Risk Characterization**

To meet the requirements of RG 1.174 and 1.178, it must be shown that the changes in risk due to changes in the inspection program do not pose a significant risk impact as determined by changes CDF or LERF. The EPRI approach to RI-ISI has been designed to ensure that risk impacts associated with enhancements to the inspection program, such as those that will be brought about by focusing inspections on high and medium risk locations, and those from gearing the examinations to those damage mechanisms most likely to be observed, will exceed

any risk increases associated with eliminating inspections from the current Section XI based program. Hence, significant adjustments to the locations that were initially selected, in order to demonstrate that risk impact requirements are not exceeded, is not anticipated. Nonetheless, in this step, it must be confirmed that the initial selection of elements for the RI-ISI program does not produce an unfavorable and unacceptable risk impact. This is accomplished through a flexible process that may involve one or more of the following: application of qualitative criteria, bounding estimates of risk impacts, realistic estimates of risk impacts, and/or adjustments to the selection of elements to meet the risk acceptance criteria. For N-560 applications, as discussed in Section 2.3, the 10 percent sampling criteria is based upon the exceptional performance history of Class 1 piping. Guidance on the process for risk impact assessment is provided in Section 3.7.

## 3.2 Definition of RI-ISI Program Scope

The EPRI approach to RI-ISI and the NRC's regulatory guidance on these applications [4] provides for flexibility in setting the scope of the risk informed elements of the program. It is understood that those piping systems not selected for the risk informed program will remain unchanged with respect to the existing Section XI based inspection requirements as well as those associated with augmented inspection programs. ASME Code Case N-560 [11] identifies the EPRI RI-ISI option for a scope covering B-J welds in Class 1 piping systems, while ASME Code Case N-578 [13] covers alternative scopes (other piping classes, or individual piping systems) up through full plant evaluations.

## 3.3 Consequence Evaluation

### *3.3.1 Fundamental Principles*

The purpose of this phase of the EPRI RI-ISI procedure is to evaluate pipe failures in terms of their impact on Core Damage Frequency (CDF) and Large Early Release Frequency (LERF). The consequence evaluation focuses on the impact of a pipe section failure (loss of pressure boundary integrity) on plant operation. This impact can be direct, indirect or a combination of both:

- Direct Impacts - A failure results in a diversion of flow and a loss of the train and/or system or an initiating event (such as a LOCA).
- Indirect Impacts - A failure results in a flood, spray, or pipe whip, spatially affecting neighboring structures, systems and components or results in depletion of a tank and loss of the systems supplied by the tank.

The approach presented herein is intended to result in a comprehensive assessment of both direct and indirect effects for a spectrum of piping failures, from pipe leaks to ruptures. The consequences due to indirect effects and direct effects are treated explicitly.

Spatial effects are an example of indirect effects caused by pressure boundary failures. These include the effects of flood, spray, and pipe whip on equipment located in the vicinity of the break. Spatial consequences of the break are determined based on the location of the analyzed break and the relative position of important equipment. Analyzed locations of the break should

be consistent with locations analyzed in other spatial analyses performed for the plant (e.g., internal flood analysis or fire analysis). The presence of important equipment in a specific location should be identified through this analyses and should be confirmed by a walkdown.

The possibility of isolating a break is also identified and accounted for as part of the consequence analysis. A break could be isolated by a protective check valve, a closed isolation valve, or it could be automatically isolated by an isolation valve that closes on a given signal. If not automatically isolated, a break can be isolated by an operator action, given successful diagnosis. The likelihood of isolating a break depends on the availability of isolation equipment, a means of detecting the break, the amount of time available to prevent specific consequences (e.g., flooding of the room or draining of the tank), and human performance. If isolation is possible, the consequence assessment should be conducted for both cases: successful and unsuccessful isolation. Operator recovery actions are further discussed in Section 3.3.3.2.

For each run of piping under evaluation, a spectrum of break sizes is evaluated. The break size ranges from a small leak to a rupture. Larger leaks and breaks have the potential to disable system or trains and to cause initiating events, flooding, or diversions of water sources. Typically, small breaks (minor leakage) would not render a train inoperable. They may, however, depending on the energy level of the system, spray onto adjacent equipment and cause equipment malfunction.

Pilot plant evaluations have shown that the large break scenarios (worst-case breaks) result in the most limiting consequences. However, the methodology was specifically developed to require that a spectrum of break sizes be evaluated so that, if smaller breaks can cause a measurable or the dominant consequence, they are identified and input into the risk ranking process.

In the consequence evaluation, continuous runs of piping are identified whose failure results in similar consequences. These runs of piping are called consequence segments and are an input into the analysis that defines the pipe segments used in the risk evaluation.

### 3.3.2 Consequence Ranking and Categorization

The goal of the consequence evaluation is to establish a process that consistently ranks consequences caused by a pipe failure, based on its risk impact or safety significance. For example, is a pipe break that results in a loss of coolant accident (LOCA) more safety significant than a pipe break that leads to a loss of feedwater? Or, is a pipe break disabling one train of high pressure injection more safety significant than a pipe break disabling an auxiliary feedwater train? In order to answer these questions consistently, consequences are categorized into different importance categories.

The consequences are ranked into those categories based on a combination of plant-specific PSA insights and results, and methodology lookup tables, which are explained in the following sections. The methodology lookup tables were developed, in order to standardize and streamline the consequence ranking process.

Four consequence importance categories have been defined based upon PSA evaluation. They are: high, medium, low, and none. The high category represents events with a significant impact on plant safety, while the low category represents events with a minor impact on plant safety. The none category defines those locations that are typified by "abandoned in place" piping.

The consequence ranking philosophy, used in this methodology, can be summarized as follows:

**High Consequence:** Pressure boundary failures resulting in events that are important contributors to plant risk and/or pressure boundary failures which significantly degrade the plant's mitigative ability.

**Low Consequence:** Pressure boundary failures resulting in anticipated operational events and/or pressure boundary failures which do not significantly impact the plant's mitigative ability.

**Medium Consequence:** This category is included to accommodate pressure boundary failures which fall between the high and low rank.

**None Consequence:** This category includes failures that have no affect on risk, an example is abandoned in place piping.

If these categories are to be confirmed by a numerical PSA evaluation, each consequence category would have an assigned range of Conditional Core Damage Probability (CCDP) or Conditional Large Early Release Probability (CLERP), associated with the impact of specific Pressure Boundary Failure (PBF). When considering uncertainties in estimating CCDP and CLERP values, mean values are used. The ranges used to numerically define each category are shown in Table 3-1.

**Table 3-1**
**Correspondence of Consequence Categories to Numerical Estimates of Conditional Core Damage Probability (CCDP) and Conditional Large Early Release Probability (CLERP)**

| Consequence Category | Corresponding CCDP Range | Corresponding CLERP Range |
|---|---|---|
| HIGH | CCDP > 1E-4 | CLERP > 1E-5 |
| MEDIUM | 1E-6 < CCDP ≤ 1E-4 | 1E-7 < CLERP ≤ 1E-5 |
| LOW | CCDP ≤ 1E-6 | CLERP ≤ 1E-7 |

CCDP and CLERP ranges are determined based on the estimates of the total risk associated with the piping failure. Risk is measured by Core Damage Frequency (CDF) or Large Early Release Frequency (LERF) as:

$$\text{CDF}[\text{given PBF}] = [\text{PBF frequency}] * [\text{CCDP}]. \qquad \textbf{Eq. 3-1}$$

$$\text{LERF}[\text{given PBF}] = [\text{PBF frequency}] * [\text{LERP}]. \qquad \textbf{Eq. 3-2}$$

Based on the above expression, and using a conservative estimate of the total PBF frequency for the plant (estimated in the order of 1E-2 per year), CCDP and CLERP ranges are selected to guarantee that all pipe locations ranked in the low consequence category do not have a potential CDF impact higher than 1E-8 per year or a potential LERF impact higher than 1E-9 per year. The boundaries between the high and medium consequence categories, at CCDP and CLERP values of 1E-4 and 1E-5 respectively, are set to correspond with the definitions of small CDF and LERF values of 1E-6 and 1E-7 per year. The assumption that 1E-6 and 1E-7 represent suitably small CDF and LERF values is consistent with the decision criteria for acceptable changes in CDF and LERF found in RG 1.174. The medium category is selected to cover the area between high and low categories, and to address uncertainties in the CCDP and CLERP estimates. The risk impact evaluation is discussed in Section 3.7.

The process of conducting a consequence evaluation is organized in four steps, as defined below:

1. Plant PSA models, systems, initiators and supporting analysis are evaluated. The initial consequence rank is established, based on the pressure boundary failures impact on CDF.

2. Containment performance is evaluated. The previously established consequence rank is reviewed and adjusted to reflect the pressure boundary failures impact on containment performance, by evaluating CLERP or by evaluating the likelihood of containment bypass.

3. Shutdown operation is evaluated. The previously established consequence rank is reviewed and adjusted to reflect the pressure boundary failures impact on plant operation during shutdown.

4. External events are evaluated. The previously established consequence rank is reviewed and adjusted to reflect the pressure boundary failures impact on the mitigation of external events.

The first two steps will be discussed in detail in Section 3.3.3. The last two steps are discussed in Sections 3.3.4 and 3.3.5, respectively.

### 3.3.3 Consequence Impact Groups and Configurations

In the EPRI Methodology, the consequence evaluation and ranking is organized into four basic consequence impact groups, with three corresponding operating configurations. Those consequence impact groups, configurations, and corresponding report sections are defined in Table 3-2.

**Table 3-2**
**Definition of Consequence Impact Groups and Configurations**

| Report Section | CONSEQUENCES | | |
|---|---|---|---|
| | Impact Group | Configuration | Description |
| 3.3.3.1 | Initiating Event | Operating | A PBF occurs in an operating (pressurized) system resulting in an initiating event |
| 3.3.3.2 | Loss of Mitigating Ability | Standby | A PBF occurs in a standby system and does not result in an initiating event, but degrades the mitigating capabilities of a system or train. After failure is discovered, the plant enters the Allowed Outage Time defined in the Technical Specification |
| | | Demand | A PBF occurs when system/train operation is required by an independent demand |
| 3.3.3.3 | Combination | Operating | A PBF causes an initiating event with an additional loss of mitigating ability (in addition to the expected mitigating degradation due to the initiator) |
| 3.3.3.4 | Containment | Any | A PBF, in addition to the above impacts, also affects containment performance |

The evaluation and ranking of the above consequence impact groups and configurations are discussed in the following sections.

### 3.3.3.1 Initiating Event Impact Group

The potential for pressure boundary failure to result in an initiating event or forced plant shutdown needs to be evaluated. This should be accomplished using a plant-specific list of initiating events from the plant PSA/IPE and design basis documentation, and could also include events that might not be explicitly modeled by either process.

An initiating event could occur as a result of a loss of fluid (e.g., LOCA, potential LOCA due to isolation valve failure, isolable LOCA, steam or feedwater line break, etc.), a loss of a system. (e.g., loss of charging, loss of service water cooling, etc.) or due to an indirect effect (e.g., spraying of an electrical bus, flooding of the room, etc.)

The importance of every initiating event, caused by the pipe failure, needs to be assessed in order to assign it to its appropriate consequence category. In order to rank the impact of one initiating event versus another, the plant's mitigating abilities need to be addressed. The plant's mitigating abilities are usually much more favorable for events which are anticipated during the plant lifetime than for the events not expected to occur during the plant's life. Also, different plants are sensitive to different types of events to differing degrees, depending on their mitigating abilities.

Considering the above, it is expected that a pipe failure that results in an initiating event, which in the plant design basis documents is expected to have a low frequency of occurrence, but it is a significant contributor to plant risk, should be categorized as "high." An example of this would be a pipe failure causing a LOCA in a typical PWR plant. Conversely, a pipe failure that results in an initiating event, which in the plant design basis documents is expected to have a high frequency of occurrence, but it is a minor contributor to plant risk, should be categorized as low. An example of this would be a pipe failure causing a normal transient, such as loss of charging in a typical PWR. The CCDP guidelines in Table 3-1 should be used to numerically define the high, medium and low thresholds for initiating events.

These principles are illustrated in Table 3-3. In Table 3-3, based on the expected frequency of occurrence, initiating events are grouped into four design basis event categories. The first category, routine operation, is not relevant to this analysis. If a postulated pipe failure results in a category IV event, or an event not expected to occur during the lifetime of a particular plant, the assigned consequence category, based on CCDP, is expected to be medium or high, depending on plant-specific design features (primarily redundancy and diversity of mitigative systems). Conversely, if a postulated pipe failure results in a category II event, anticipated operational occurrence, the significance of this impact is not expected to be high, and the assigned consequence category should be low or medium. Failures that result in category III events, infrequent events, can vary between high and low consequence categories, depending on the specific initiating event and importance of that event to plant risk. For example, Loss of Offsite Power (LOSP) is expected to be a significant risk contributor and, therefore, is expected to be assigned to a high consequence category, while excessive feedwater is not expected to be a significant risk contributor and, therefore, would likely be assigned to a low consequence category. (Note: pipe failure can result in LOSP due to spatial considerations such as, flooding of the switchgear room.)

**Table 3-3**
**General Guidelines for Assigning Consequence Categories to PBFs Resulting in an Initiating Event**

| Design Basis | | Initiating Event Examples | Expected Consequence Category |
|---|---|---|---|
| Initiating Event Category | Description | | |
| I<br>Routine Operation | Routine Operation | Startup, shutdown, standby, refueling, etc. | N/A |
| II<br>Anticipated Operational Occurrence | Events that might occur during a calendar year in a particular plant<br>(frequency > 0.1/yr.) | Reactor trip, turbine trip, partial loss of MFW | LOW/MEDIUM |
| III<br>Infrequent Events | Events that might occur during the lifetime of a particular plant<br>(frequency 0.01/yr. through 0.1/yr.) | Excessive feedwater/steam removal<br>LOSP | LOW/MEDIUM<br>MEDIUM/HIGH |
| IV<br>Limiting Faults or Accidents | Events not expected to occur during the plant's lifetime<br>(frequency <0.01/yr.) | SLOCA<br>MLOCA/LLOCA<br>SLB<br>ISLOCA | MEDIUM/HIGH |

It should be noted that Table 3-3 is presented only to illustrate general guidelines. Consequence categories for pressure boundary failures leading to an initiating event are explicitly determined from the plant PSA/IPE results, based on the numerical guidelines defined in Table 3-1. When a PBF causes an initiating event modeled in the PSA, the CCDP corresponding to that initiating event can be obtained directly from the PSA results. A plant-specific version of Table 3-3, from one of the pilot applications, is shown in Table 3-4. This example illustrates that final initiating event ranking is a function of plant-specific design features. It should be confirmed that the PSA/IPE model for initiating events is applicable for the specific initiators caused by a PBF. For example, recovery of offsite power, an important factor in PSA models, probably can not be credited if a loss of offsite power was caused by a PBF and flooding in the switchgear room. A table like Table 3-4 should be generated for each plant specific application, assuring plant specific PSA model truncation issues are addressed.

**Table 3-4**
**A Plant-Specific Example of Assigning Consequence Categories to PBFs Resulting in an Initiating Event**

| Design Basis Initiating Event Category | Initiating Event | Initiating Event Frequency (1/Yr.) | CDF due to Initiating Event (1/yr.) | Corresponding CCDP | Consequence Category |
|---|---|---|---|---|---|
| II | Reactor Trip | 2 | 1E-6 | 5E-7 | LOW |
| | Turbine Trip | 1 | 1E-6 | 1E-6 | LOW |
| | Loss of PCS | 3E-1 | 9E-7 | 3E-6 | MEDIUM |
| III | Loss of SW Train | 8E-2 | 2E-6 | 3E-5 | MEDIUM |
| | LOSP | 5E-2 | 2E-6 | 4E-5 | MEDIUM |
| IV | SLB | 1E-3 | 1E-9 | 1E-6 | MEDIUM |
| | Small LOCA | 5E-3 | 2E-6 | 4E-4 | HIGH |
| | Medium LOCA | 1E-3 | 2E-6 | 2E-3 | HIGH |
| | Large LOCA | 1E-4 | 1.5E-6 | 1.5E-2 | HIGH |

Containment performance is not specifically considered in this consequence impact group. The CLERP would need to be evaluated only if the plant-specific CLERP (in this case, conditional on core damage) is higher than 0.1, which was not the case in any of the pilot plant applications.

### 3.3.3.2 Loss of Mitigating Ability Impact Group

The potential for pressure boundary failure to degrade plant mitigating ability needs to be evaluated. This evaluation should identify those pipe failures that can result in a loss or degradation of a system and/or train, or possibly, multiple systems and/or trains.

A system and/or train can be lost either due to diversion of flow or due to secondary effects caused by the PBF. Both direct and indirect effects of pipe failure need to be evaluated to determine the affected systems. There are times when failure of the pipe does not result in a loss of system and/or train, but in a partial degradation of the system and/or train. Those cases also need to be analyzed.

During this analysis, the system safety function, the means of detecting a failure, test and maintenance practices, and technical specifications (i.e. limiting conditions for operation; LCO) associated with the system are identified. Possible automatic or operator actions to prevent or recover a loss of a system should also be identified and evaluated.

Table 3-5 provides guidance in assigning the consequence categories to pipe failures that affect the plant mitigating ability, but do not cause an initiating event. This table is designed to simplify determining the CCDP range (defined in Table 3-1) for the pressure boundary failures that cause a loss of system and/or train, without the need for time-consuming PSA quantifications. PSA quantifications are expected to result in the same range for each case, which has been confirmed in pilot plant applications. However, the use of Table 3-5 and its validation, as shown in the pilot applications requires understanding and consistent use of its fundamental premise (i.e. equivalent train worth).

Table 3-5 measures the "importance" of different systems, through corresponding CCDP. It helps to answer the following, and similar, questions: "is the loss of one train of feedwater more important than the loss of one train of high pressure injection?" This CCDP, given a loss of system, can be also calculated via PSA models, using Equation 3-3.

$$\text{CCDP (given loss of a system)} = [\text{CDF (given loss of a system)} - \text{CDF (Base)}] * [\text{Exposure Time}] \qquad \textbf{Eq. 3-3}$$

The Tables 3-6 through 3-8 illustrate the principles and underlying numerical values used to define the consequence ranks in Table 3-5. The factors from Equation 3-3 and Table 3-5 are discussed below.

**Table 3-5**
**Guidelines for Assigning Consequence Categories to Pipe Failures Resulting in System/Train Loss**

| Affected Systems | | Number of Unaffected Backup Trains | | | | | | | |
|---|---|---|---|---|---|---|---|---|---|
| Frequency of Challenge | Exposure Time to Challenge | 0.0 | 0.5 | 1.0 | 1.5 | 2.0 | 2.5 | 3.0 | >=3.5 |
| Anticipated (DB Cat II) | All Year | HIGH | HIGH | HIGH | HIGH | MEDIUM | MEDIUM | LOW* | LOW |
| | Between tests (1-3 months) | HIGH | HIGH | HIGH | MEDIUM* | MEDIUM | LOW* | LOW | LOW |
| | Long AOT (<=1 week) | HIGH | HIGH | MEDIUM* | MEDIUM | LOW* | LOW | LOW | LOW |
| | Short AOT (<=1 day) | HIGH | MEDIUM* | MEDIUM | LOW* | LOW | LOW | LOW | LOW |
| Infrequent (DB Cat. III) | All Year | HIGH | HIGH | HIGH | MEDIUM | MEDIUM | LOW* | LOW | LOW |
| | Between tests (1-3 months) | HIGH | HIGH | MEDIUM* | MEDIUM | LOW* | LOW | LOW | LOW |
| | Long AOT (<=1 week) | HIGH | MEDIUM* | MEDIUM | LOW* | LOW | LOW | LOW | LOW |
| | Short AOT (<=1 day) | HIGH | MEDIUM | LOW* | LOW | LOW | LOW | LOW | LOW |
| Unexpected (DB Cat. IV) | All Year | HIGH | HIGH | MEDIUM | MEDIUM | LOW* | LOW | LOW | LOW |
| | Between tests (1-3 months) | HIGH | MEDIUM | MEDIUM | LOW* | LOW | LOW | LOW | LOW |
| | Long AOT (<=1 week) | HIGH | MEDIUM | LOW* | LOW | LOW | LOW | LOW | LOW |
| | Short AOT (<=1 day) | HIGH | LOW* | LOW | LOW | LOW | LOW | LOW | LOW |

**Containment Performance:** If there is no containment barrier and the consequence category is marked by an *, the consequence category should be increased (medium to high or low to medium).

**Table 3-6**
**Numerical Illustration for Table 3-5, Guidelines for Assigning Consequence Categories to Pipe Failures Resulting in System/Train Loss**

| Affected Systems | | Number of Unaffected Backup Trains | | | | | | | |
|---|---|---|---|---|---|---|---|---|---|
| Frequency of Challenge | Exposure Time to Challenge | 0.0 | 0.5 | 1.0 | 1.5 | 2.0 | 2.5 | 3.0 | >=3.5 |
| Anticipated | All Year | 3.2E-01 | 3.2E-02 | 3.2E-03 | 3.2E-04 | 3.2E-05* | 3.2E-06 | 3.2E-07* | 3.2E-08 |
| (DB Cat. II) | Between tests (1-3 months) | 7.9E-02 | 7.9E-03 | 7.9E-04 | 7.9E-05* | 7.9E-06 | 7.9E-07* | 7.9E-08 | 7.9E-09 |
| | Long AOT (<=1 week) | 6.1E-03 | 6.1E-04 | 6.1E-05* | 6.1E-06 | 6.1E-07* | 6.1E-08 | 6.1E-09 | 6.1E-10 |
| | Short AOT (<=1 day) | 8.7E-04 | 8.7E-05* | 8.7E-06 | 8.7E-07* | 8.7E-08 | 8.7E-09 | 8.7E-10 | 8.7E-11 |
| Infrequent | All Year | 3.2E-02 | 3.2E-03 | | 3.2E-05* | 3.2E-06 | 3.2E-07* | 3.2E-08 | 3.2E-09 |
| (DB Cat. III) | Between tests (1-3 months) | 7.9E-03 | 7.9E-04 | 7.9E-05* | 7.9E-06 | 7.9E-07* | 7.9E-08 | 7.9E-09 | 7.9E-10 |
| | Long AOT (<=1 week) | 6.1E-04 | 6.1E-05* | 6.1E-06 | 6.1E-07* | 6.1E-08 | 6.1E-09 | 6.1E-10 | 6.1E-11 |
| | Short AOT (<=1 day) | 8.7E-05 | 8.7E-06 | 8.7E-07* | 8.7E-08 | 8.7E-09 | 8.7E-10 | 8.7E-11 | 8.7E-12 |
| Unexpected | All Year | 3.2E-03 | 3.2E-04 | 3.2E-05* | 3.2E-06 | 3.2E-07* | 3.2E-08 | 3.2E-09 | 3.2E-10 |
| (DB Cat. IV) | Between tests (1-3 months) | 7.9E-04 | 7.9E-05* | 7.9E-06 | 7.9E-07* | 7.9E-08 | 7.9E-09 | 7.9E-10 | 7.9E-11 |
| | Long AOT (<=1 week) | 6.1E-05 | 6.1E-06 | 6.1E-07* | 6.1E-08 | 6.1E-09 | 6.1E-10 | 6.1E-11 | 6.1E-12 |
| | Short AOT (<=1 day) | 8.7E-06 | 8.7E-07* | 8.7E-08 | 8.7E-09 | 8.7E-10 | 8.7E-11 | 8.7E-12 | 8.7E-13 |

= High Consequence Category

M = Medium Consequence Category

L = Low Consequence Category

**Containment Performance:** If there is no containment barrier and the consequence category is marked by an *, the consequence category should be increased (medium to high and low to medium).

**Table 3-7**
**Numerical Illustration for Table 3-5, Guidelines for Assigning Consequence Categories to Pipe Failures Resulting in System/Train Loss – Upper Bound Sensitivity Case**

| Affected Systems | | Number of Unaffected Backup Trains | | | | | | | |
|---|---|---|---|---|---|---|---|---|---|
| Frequency of Challenge | Exposure Time to Challenge | 0.0 | 0.5 | 1.0 | 1.5 | 2.0 | 2.5 | 3.0 | >=3.5 |
| Anticipated (DB Cat. II) | All Year | 1.0E+00 | 1.0E-01 | 1.0E-02 | 1.0E-03 | 1.0E-04* | 1.0E-05 | 1.0E-06* | 1.0E-07 |
| | Between tests (1-3 months) | 2.5E-01 | 2.5E-02 | 2.5E-03 | 2.5E-04* | 2.5E-05 | 2.5E-06* | 2.5E-07 | 2.5E-08 |
| | Long AOT (<=1 week) | 2.0E-02 | 2.0E-03 | 2.0E-04* | 2.0E-05 | 2.0E-06* | 2.0E-07 | 2.0E-08 | 2.0E-09 |
| | Short AOT (<=1 day) | 3.0E-03 | 3.0E-04* | 3.0E-05 | 3.0E-06* | 3.0E-07 | 3.0E-08 | 3.0E-09 | 3.0E-10 |
| Infrequent (DB Cat. III) | All Year | 1.0E-01 | 1.0E-02 | 1.0E-03 | 1.0E-04* | 1.0E-05 | 1.0E-06* | 1.0E-07 | 1.0E-08 |
| | Between tests (1-3 months) | 2.5E-02 | 2.5E-03 | 2.5E-04* | 2.5E-05 | 2.5E-06* | 2.5E-07 | 2.5E-08 | 2.5E-09 |
| | Long AOT (<=1 week) | 2.0E-03 | 2.0E-04* | 2.0E-05 | 2.0E-06* | 2.0E-07 | 2.0E-08 | 2.0E-09 | 2.0E-10 |
| | Short AOT (<=1 day) | 3.0E-04 | 3.0E-05 | 3.0E-06* | 3.0E-07 | 3.0E-08 | 3.0E-09 | 3.0E-10 | 3.0E-11 |
| Unexpected (DB Cat. IV) | All Year | 1.0E-02 | 1.0E-03 | 1.0E-04* | 1.0E-05 | 1.0E-06* | 1.0E-07 | 1.0E-08 | 1.0E-09 |
| | Between tests (1-3 months) | 2.5E-03 | 2.5E-04* | 2.5E-05 | 2.5E-06* | 2.5E-07 | 2.5E-08 | 2.5E-09 | 2.5E-10 |
| | Long AOT (<=1 week) | 2.0E-04 | 2.0E-05 | 2.0E-06* | 2.0E-07 | 2.0E-08 | 2.0E-09 | 2.0E-10 | 2.0E-11 |
| | Short AOT (<=1 day) | 3.0E-05 | 3.0E-06* | 3.0E-07 | 3.0E-08 | 3.0E-09 | 3.0E-10 | 3.0E-11 | 3.0E-12 |

| | | |
|---|---|---|
| | = | High Consequence Category |
| M | = | Medium Consequence Category |
| L | = | Low Consequence Category |

**Containment Performance:** If there is no containment barrier and the consequence category is marked by an *, the consequence category should be increased (medium to high and low to medium).

**Table 3-8**
**Numerical Illustration for Table 3-5, Guidelines for Assigning Consequence Categories to Pipe Failures Resulting in System/Train Loss – Lower Bound Sensitivity Case**

| Affected Systems | | Number of Unaffected Backup Trains | | | | | | | |
|---|---|---|---|---|---|---|---|---|---|
| Frequency of Challenge | Exposure Time to Challenge | 0.0 | 0.5 | 1.0 | 1.5 | 2.0 | 2.5 | 3.0 | >=3.5 |
| Anticipated (DB Cat. II) | All Year | 1.0E-01 | 1.0E-02 | 1.0E-03 | 1.0E-04 | 1.0E-05* | 1.0E-06 | 1.0E-07* | 1.0E-08 |
| | Between tests (1-3 months) | 2.5E-02 | 2.5E-03 | 2.5E-04 | 2.5E-05* | 2.5E-06 | 2.5E-07* | 2.5E-08 | 2.5E-09 |
| | Long AOT (<=1 week) | 1.9E-03 | 1.9E-04 | 1.9E-05* | 1.9E-06 | 1.9E-07* | 1.9E-08 | 1.9E-09 | 1.9E-10 |
| | Short AOT (<=1 day) | 2.7E-04 | 2.7E-05* | 2.7E-06 | 2.7E-07* | 2.7E-08 | 2.7E-09 | 2.7E-10 | 2.7E-11 |
| Infrequent (DB Cat. III) | All Year | 1.0E-02 | 1.0E-03 | 1.0E-04 | 1.0E-05* | 1.0E-06 | 1.0E-07* | 1.0E-08 | 1.0E-09 |
| | Between tests (1-3 months) | 2.5E-03 | 2.5E-04 | 2.5E-05* | 2.5E-06 | 2.5E-07* | 2.5E-08 | 2.5E-09 | 2.5E-10 |
| | Long AOT (<=1 week) | 1.9E-04 | 1.9E-05* | 1.9E-06 | 1.9E-07* | 1.9E-08 | 1.9E-09 | 1.9E-10 | 1.9E-11 |
| | Short AOT (<=1 day) | 2.7E-05 | 2.7E-06 | 2.7E-07* | 2.7E-08 | 2.7E-09 | 2.7E-10 | 2.7E-11 | 2.7E-12 |
| Unexpected (DB Cat. IV) | All Year | 1.0E-03 | 1.0E-04 | 1.0E-05* | 1.0E-06 | 1.0E-07* | 1.0E-08 | 1.0E-09 | 1.0E-10 |
| | Between tests (1-3 months) | 2.5E-04 | 2.5E-05* | 2.5E-06 | 2.5E-07* | 2.5E-08 | 2.5E-09 | 2.5E-10 | 2.5E-11 |
| | Long AOT (<=1 week) | 1.9E-05 | 1.9E-06 | 1.9E-07* | 1.9E-08 | 1.9E-09 | 1.9E-10 | 1.9E-11 | 1.9E-12 |
| | Short AOT (<=1 day) | 2.7E-06 | 2.7E-07* | 2.7E-08 | 2.7E-09 | 2.7E-10 | 2.7E-11 | 2.7E-12 | 2.7E-13 |

| | | |
|---|---|---|
| | = | High Consequence Category |
| M | = | Medium Consequence Category |
| L | = | Low Consequence Category |

**Containment Performance:** If there is no containment barrier and the consequence category is marked by an *, the consequence category should be increased (medium to high and low to medium).

Table 3-5 is based on three factors, which in combination, define the system importance. Those factors are frequency of challenge, number of back-up trains unaffected, and exposure time to the conditions created by the pipe failure. Each of these factors are addressed separately below:

### *3.3.3.2.1 Frequency of the Challenge*

The frequency of the challenge determines how often the mitigating function of the systems and/or trains is anticipated to be called upon. Since in this section, we are dealing with pressure boundary failures that do not cause initiating events, but do impact mitigation capabilities, the challenge referred to here is that from other independent initiating events (i.e. not the pipe failure under evaluation). All other factors being equal, systems that are called upon to mitigate an anticipated event would be more important than systems called upon to mitigate an accident (e.g. unexpected event).

Frequency of the challenge corresponds to the frequency of the independent initiating event that requires the system and/or train operation. In Table 3-5, similar to Table 3-3, the frequency of the challenge is grouped into design basis event categories (II, III, and IV): anticipated events (greater than once every ten years), infrequent events (once in a plant lifetime), and unexpected (not expected to occur). The quantitative basis for the frequency of the challenge is defined in Table 3-7 Given that the frequency of challenge is expressed as a range, an expected value is also provided in Table 3-9.

**Table 3-9**
**Frequency of the Challenge: Numerical Values**

| Design Basis Initiating Event Category | IE Frequency Lower Bound | IE Frequency Upper Bound | Expected Value |
|---|---|---|---|
| II (anticipated events) | >0.1/yr. | >1/yr. | 3.2E-1 |
| III (infrequent events) | 0.01/yr., 0.1/yr. | 0.1/yr. | 3.2E-2 |
| IV (unexpected)* | <0.01/yr. | 0.01/yr. | 3.2E-3 |

* -Many of these events may have frequencies substantially below 1E-02. Additional analysis may be conducted to support the assignment of pressure boundary failures to lower consequence categories, by crediting the lower frequency of challenge.

### *3.3.3.2.2 Number of Backup Systems and/or Trains available*

The number of backup trains and/or systems available determines how many unaffected systems or trains are available to perform the same mitigating function. The availability of multiple backup trains would make the effects of the loss of one system and/or train less significant. Backup systems should be evaluated for each plant safety function (reactivity control, secondary heat removal, RCS inventory, etc.).

The guidance provided in Table 3-5 is based on the PSA logic structure: That is, plant response and the critical failure combinations. The critical failure combinations and available success

paths are analyzed for each safety function and used to determine the importance of each mitigating system.

A list of the plant critical safety functions, and their description, should be developed during this evaluation. These descriptions should include which plant systems and actions provide which safety functions. A simplified graphical illustration of the three safety functions analyzed in a PWR pilot application, for a transient initiating event, is provided in Figure 3-3. Figure 3-3 illustrates the heat removal, inventory control, and long term heat removal safety functions, based on the success criteria for a transient initiating event.

As seen from Figure 3-3, AFW is needed to perform the heat removal function and the backup systems and/or trains are MFW, motor and turbine driven EFW, and the feed and bleed function. HPSI, on the other hand, is needed for three functions: for heat removal (as part of the feed and bleed function), for inventory control (as a high pressure injection), and for long term heat removal (as a high pressure recirculation). If the affected system is needed to mitigate different safety functions, then the number of available backup systems and/or trains should correspond to the most critical number from the various functions (this is also a function of the frequency of the challenge, or, in other words, the most critical combination of backup trains and frequency of the challenge, as will be discussed later in this section).

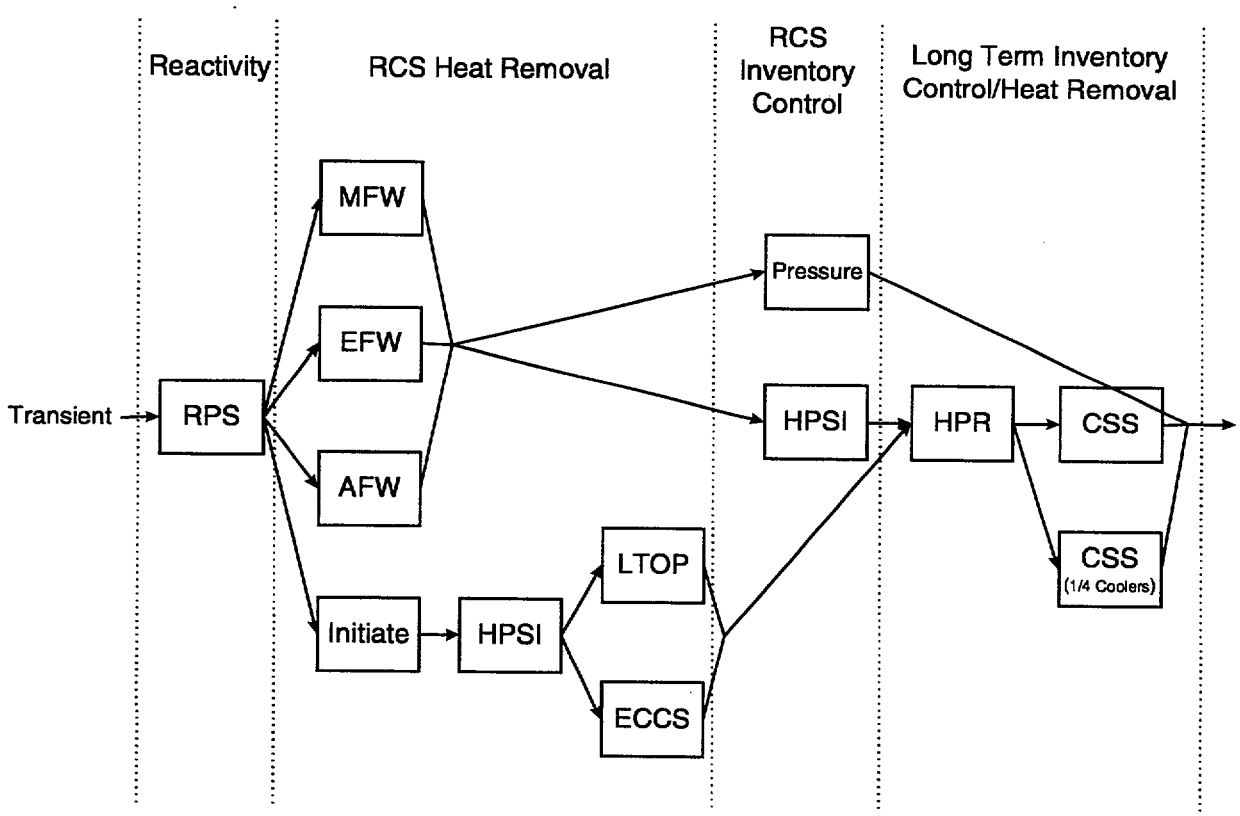


**Figure 3-3**
**Heat Removal, Inventory Control, and Long term Heat Removal Safety Functions**

As shown in Table 3-5, the number of backup trains is given in "one-half" increments. To standardize crediting backup trains, a train "worth" concept has been introduced. A train of turbine driven EFW (unavailability of approximately 1E-1) should not be credited equally as a train of motor driven EFW (unavailability of approximately 1E-2). Because of this, a backup train "worth" is introduced and predefined to have a mean unavailability value of approximately 1E-2. The quantitative basis for the backup train "worth" is defined in Table 3-10.

**Table 3-10**
**Backup Trains: Unavailability Values**

| Backup Train "Worth" | Unavailability Interval | Unavailability Mean Value |
|---|---|---|
| 0.5 | 3E-2 to 3E-1 | 1E-1 |
| 1 | 3E-3 to 3E-2 | 1E-2 |
| 1.5 | 3E-4 to 3E-3 | 1E-3 |
| 2 | 3E-5 to 3E-4 | 1E-4 |
| 2.5 | 3E-6 to 3E-5 | 1E-5 |
| 3 | 3E-7 to 3E-6 | 1E-6 |

Not all of the individual backup trains have a train "worth." An example, from a BWR plant pilot application is given in Table 3-11.

**Table 3-11**
**Example Calibration of System Train Worth for a BWR Pilot Plant**

| System/Train | Unavailability | Corresponding Train "Worth" |
|---|---|---|
| FW | 1.5E-2 | 1 |
| HPCI | 8.8E-2 | 0.5 |
| RCIC | 1.1E-1 | 0.5 |
| 1 LPCI Train | 9.2E-3 | 1 |
| 2 LPCI Trains | 2.5E-4 | 2 |
| 1 CS Train | 1.1E-2 | 1 |
| 2 CS Trains | 3.9E-4 | 1.5 |

As seen from the above table, the backup trains can not always be simply summed. In the core spray (CS) system, two trains are only "worth" 1.5 trains. This is because common cause dominates system unavailability.

By explicitly considering the system unavailability, the methodology accounts for dependency between trains of the same system. In general, common cause dependency between different systems is not important. On a plant-specific basis if such dependencies (including support system dependencies) are identified and found to be important, they should be reflected in the train "worth" assumptions.

### Human Actions as Backup Trains

Human actions, included in the PSA success criteria, are also credited as backup trains, based on human error probability (HEP). One example is shown in Figure 3-3, where the operator action to initiate feed and bleed is credited in the heat removal function. In addition to human actions modeled in the PSA, the actions to recover from pipe failures, and minimize consequences by isolating breaks, are also modeled in this approach and credited as backup trains. If isolation is possible, consequences should be analyzed for both cases: successful and unsuccessful isolation. In the case where isolation is successful, than the recovered trains or systems are credited. In the case where isolation failed, then, in addition to the isolation, only the remaining trains (if any) are credited. If a unisolated failure would disable all backup trains, the only protection available is isolation of the break.

Operator recovery actions (isolation of the break) can only be credited if:

- There is an alarm and/or clear indication, to which the operator will respond,
- The response is directed by procedure,
- The isolation equipment (e.g. valves) is not affected by the break,
- There is enough time to perform isolation and reduce consequences.

If all of the above factors are satisfied, and can be documented, it is recommended crediting the recovery action, and assuming one backup train "worth" (HEP of approximately 1E-2). The licensee shall not take credit for more than what the recoverable train or system is worth. Additional recovery may be credited on a plant specific basis and should be documented. As necessary, the performance of detailed HRA analysis can be required. Of course, it is left to the analyst to evaluate how reasonable the simplified assumption is and, if necessary, perform a full HEP analysis. It should be noted that, in the addition to the new recovery actions specifically introduced in this analysis, recovery actions already modeled in the PSA can be affected by the analyzed events and need to be reevaluated. If a failure of the system or train is a result of a pressure boundary failure, than the recoveries usually credited in PSA, for example a recovery of the pump, can not be credited. This is also discussed in the Initiating Events Section.

#### *3.3.3.2.3 Exposure Time*

The exposure time determines the downtime for the failed system and/or train, or the time the system and/or train would be unavailable before the plant is shutdown.

As known from the PSA application, when equipment that does not cause an initiating event is set to failed, the result of the PSA calculation is a conditional core damage frequency, unless the degraded situation is assumed to exist over some fixed time. In this methodology, it is assumed that the degraded situation exists during an exposure time. That is, the equipment will not be available if challenged during the exposure time.

There are two categories of exposure time, if a pipe failure is discovered immediately, the exposure time is equal to the applicable Allowed Outage Time (AOT) (plus the time it took to detect the failure). If the pipe failure goes undetected, it is assumed that the exposure time is equal to the test period, or all year if the equipment is not tested. Four different exposure times are included in Table 3-5.

a) **All Year**, which applies to standby systems and parts of systems where pipe segments are not "tested" or exposed to the operating load during the year.

b) **Time Between Tests**, applies to the standby systems, which are regularly tested (monthly or quarterly). It is assumed that, for those systems, an actual exposure time is equal to the test interval because, if a pipe degraded condition is present, it will be discovered during the test.

c) **Long AOT**, applies to operating or standby systems where a pipe failure will be detected within a short time after the occurrence, and the plant will shutdown if the failure is not recovered during the AOT. The exposure time is, therefore, equal to the AOT plus detection time. A "long AOT" exposure time is one to two weeks.

d) **Short AOT**, applies to the same systems as the "long AOT," but the exposure time is less than 72 hours.

The quantification basis for the exposure time are given in Table 3-12.

**Table 3-12**
**Exposure Time: Numerical Values**

| Exposure Time | Interval | Corresponding Value |
|---|---|---|
| All Year | 1 Year | 1 year |
| Between Test | 3 Months | 0.25 year |
| Long AOT | 1 Week | 1.9E-2 year |
| Short AOT | 1 Day | 2.7E-3 year |

As defined in the introduction to Section 3.3, in the loss of mitigating ability impact group, two operating configurations are analyzed.

**Standby**: A pressure boundary failure occurs in a standby system and it is detected either by instrumentation, test or visual inspection. After the failure is detected, the plant enters the AOT. Exposure time is equal to the AOT plus detection time.

**Demand**: A pressure boundary failure occurs when system operation is required by an independent demand. Exposure time, in this case, is equal to the test interval, or to all year if the system is not tested. Test pressures or flows are credited as equivalent to demand conditions, thereby reducing exposure time in the analysis of demands for piping that experiences testing.

### Numerical Basis for Table 3-5

Based on the factors previously described, the CCDP, given a loss of system train, can be expressed as shown :

$$CCDP = IE_c * \prod_{i=1}^{N} BU_i\ (SF_c) * ET \qquad \textbf{Eq. 3-4}$$

Where:

$IE_c$ is the critical initiating event (frequency) for the analyzed loss of the system (usually the most likely event to challenge system operation).

$BU_i\ (SF_c)$ is the i$^{th}$ backup train for the critical safety function and the analyzed loss of the system. The critical safety function is usually the safety function with the minimum redundancy, see discussion below.

$ET$ is exposure time

The above equation is consistent with the principle in which PSA models are quantified. It should be mentioned that, if the system is required to mitigate a number of initiators and performs multiple safety functions, the critical combination of the initiator and safety function should be evaluated. For example, HPSI operation could be required to mitigate a transient, (e.g. HPSI is credited in the secondary heat removal for feed and bleed). The redundancy of the secondary heat removal systems is high (MFW, EFW, AFW). HPSI operation is also required to mitigate a small LOCA, a less likely event, where the Inventory Control function requires HPSI operation (low or zero redundancy). Those two combinations need to be analyzed, and the more critical one should be selected in the consequence ranking.

Based on the above equation for CCDP, numerical values could be entered in Table 3-5, using the quantitative values for the variables given in Tables, 3-9, 3-10 and 3-12. This is shown in Table 3-6 using the expected values for frequency of challenge and train unavailability, and the bounding values for exposure time. This table illustrates the principles and underlying numerical values used to define the consequence ranks in Table 3-5.

For illustrative purposes, two additional cases are provided in Tables 3-7 and 3-8. Table 3-7 uses upper bound values for 'frequency of challenge' (i.e. 1.0 for anticipated, 1E-01 for infrequent and 1E-2 for unexpected) and 'exposure time' while maintaining 'train unavailability' at its mean value. Table 3-8 uses lower bound values for 'frequency of challenge' (i.e. 1E-01 for anticipated, 1E-2 for infrequent and 1E-03 for unexpected), upper bounds values for 'exposure time' and mean values for 'train unavailability.'

The categories provided in Tables 3-5 and 3-6 were confirmed in the pilot plant applications. However, there may be cases when plant-specific values are higher. If so, a plant-specific review is needed to confirm these categories, when they are close to the category bounding values.

Issues associated with containment performance and its impact on consequence ranking are also illustrated in Tables 3-5 and 3-6. As an example, if the CCDP is above 1E-5, CLERP could be the overriding factor in determining the consequence rank. This will be discussed in more detail in Section 3.3.3.4.

Tables 3-5 and 3-6 illustrate the plant and equipment reliability basis for evaluating the plant mitigative function. Application of this lookup table also assures quantitative "defense in depth" of the plant response, because all PBF leading to "zero defense" are evaluated as high, even when the corresponding CCDP is lower.

#### 3.3.3.3 Combinations Impact Group

Guidelines for determining consequence categories for the combination consequence group are given in Table 3-13. This table applies to the evaluation of pipe failures which cause both an initiating event and affect the mitigating ability, in addition to the expected and modeled effects of the initiator. For example, when a loss of an injection leg occurs with a LOCA, that is an expected LOCA effect on the mitigating ability, and typically is analyzed as a simple initiating event (Section 3.3.3.1). If in addition to the loss of an injection leg, HPSI (or other injection system) operation is effected, that combination should be evaluated using Table 3-13. Also, if a postulated pipe segment failure results in an initiating event, and a loss of the system which is not needed to mitigate this initiating event, then it is recommended that this combination be treated as a simple initiating event, where Table 3-3 applies. In all cases, if the event impacts more than one group, then the worst case category applies.

**Table 3-13**
**Guidelines for Assigning Consequence Categories to Combinations of Consequence Impacts**

| Combination Event | Consequence Category |
|---|---|
| Initiating Event and less than 2 unaffected backup trains available for mitigation | |
| Initiating Event and at least 2, but less than 3, unaffected backup trains available for mitigation | MEDIUM (or IE category from Table 3-3, if higher) |
| Initiating Event and at least 3 unaffected backup trains available for mitigation | LOW (or IE category from Table 3-3, if higher) |
| Initiating Event and no additional mitigating ability affected | IE consequence category from Table 3-3 |
| **Containment Performance**: If there is no containment barrier, the consequence category is affected as follows:<br>• 2 Unaffected backup trains and no containment barrier: medium becomes high. If the number of unaffected trains is between 2 and 3, medium is retained<br>• 3 Unaffected backup trains and no containment barrier: low becomes medium. If the number of unaffected trains is greater than 3, low is retained | |

As can be seen in Table 3-13, the consequence category is determined based on the numerical ranges defined in Section 3.2 and backup train "worth" defined in Section 3.3.3.2.

### 3.3.3.4 Containment Performance Impact Group

The consequence evaluations in Sections 3.3.3.1, 3.3.3.2, and 3.3.3.3, with the use of Tables 3-3, 3-5, and 3-13, are primarily based on the calculation of CCDP (with exceptions to the notes provided with Table 3-5 and Table 3-13, which define a simplified way to evaluate a containment bypass). In addition to consequences affecting CDF, pressure boundary failures need to be evaluated for their impact on the containment performance such as their effects on LERF.

The general philosophy for addressing containment performance is to assure a 0.1 conditional probability of LERF, given core damage. If this is not satisfied, a consequence category determined by CCDP numerical criteria may be increased. This has already been defined in CCDP and LERP numerical criteria, described in Section 3.2. For example, if CCDP for a PBF was estimated at approximately 8E-5 (a medium rank), and the conditional LERF given core damage is judged to be higher than 0.1, then CLERP for that PBF could be higher than 1E-5, and the consequence rank could increase to high.

In this methodology, LERF is addressed in three ways:

Pressure boundary failure impact on containment isolation.

1. Pressure boundary failure impact on LOCA outside containment.

2. Pressure boundary failure impact on early core melt and containment failure.

These LERF considerations are discussed below:

### *Impact on Containment Isolation*

If the impact of pressure boundary failure leads to a loss of containment isolation, or containment bypass, the consequence categories in Table 3-5 and 3-13, based on the CCDP numerical criteria, would change in the cases which are defined in the tables. Changes are based on the CLERP numerical criteria. As long as there is an isolation valve available, or a closed system that provides containment isolation, the consequence category, based on the CCDP criteria, should not change.

### *LOCA Outside Containment*

Certain pressure boundary failures can significantly increase the potential for a LOCA outside containment. Table 3-14 explicitly deals with those scenarios. Input to Table 3-14 is plant specific, and depends on the location of the break, available means of isolation, and information available about passive barriers (check valve leak detection, etc.). The rank in Table 3-14 is based on estimates of isolation boundary unavailability. Plant specific evaluations should confirm that these unavailabilities are appropriate. If the plant specific evaluations do not confirm the rankings given in Table 3-14, than the licensee should adjust those rankings appropriately or develop an alternative argument to provided justification for using the original ranks from Table 3-14.

In Table 3-14, it is assumed that, given LOCA outside containment, there is still protection against a large early release, on the order of 0.1 or less. The assumption is a conservative one, because, given a LOCA outside containment, there are still recovery actions, ways to prevent a core melt, and mitigation means against an early or large release. This event illustrates why two active failures are ranked in the medium consequence rank.

**Table 3-14**
**Example of Guidelines for Assigning Consequence Categories to Pipe Failures Resulting in Increased Potential for an Unisolated LOCA Outside of Containment**

| Protection Against LOCA Outside Containment | Consequence Category |
|---|---|
| One Active[1] | |
| One Passive[2] | |
| Two Active | MEDIUM |
| One Active, One Passive | MEDIUM |
| Two Passive | LOW |
| More than Two | NONE |

Note 1: An Active Protection is presented by a valve that needs to close on demand.
Note 2: A Passive Protection is presented by a valve that needs to remain closed.

*Impact on Early Core Melt and Containment Structural Failure*

This event requires a more complex analysis, is often difficult to assess, and may not be modeled in many PSAs. Insights from the pilot applications have shown the following:

In the case of PWRs, the conditional probability of early containment failure is generally on the order of 0.1 or lower. The pressure boundary failures that can affect this conditional probability are usually those that affect containment cooling (for example, loss of containment spray or service water). Those pressure boundary failures, that are bordering a critical CCDP range, need to be specifically evaluated in order to estimate CLERP and assure that the CCDP based rank is still appropriate.

In the case of BWRs, the conditional probability of early containment failure is generally on the order of 0.1 or higher. In those cases, pressure boundary failures that affect specific safety functions that can present a significant containment challenge (loss of reactivity control, vapor suppression failure, loss of injection), and are bordering a critical CCDP range, need to be specifically evaluated in order to estimate CLERP and assure that the CCDP based rank is still appropriate.

### 3.3.3.5 Examples of Consequence Evaluations

Examples of consequence evaluations are provided for the three different configurations, defined in Table 3-2. Those examples are designed in order to illustrate that CCDP is an appropriate measure for the consequences in each configuration. As shown in the Risk Matrix, Figure 3-4, a risk from a pressure boundary failure is measured as:

[ Consequence ] * [ Failure Likelihood ]

In the next three subsections, equations for "measure of risk" are derived for each analyzed configuration: operating, standby and demand. Those equations are intended to show that the risk, in this case core damage frequency (CDF), could in each configuration be expressed as a product of CCDP and failure frequency (lambda). Given that the failure likelihood is expressed with the failure frequency or lambda, CCDP proves to be an appropriate measure for the consequences. Those equations for "measure of risk" also illustrate that the risk matrix works well as a risk measuring tool for different operating configurations.

#### *3.3.3.5.1 Operating Configuration*

A pipe break occurs in an operating (pressurized) system, resulting in an initiating event (IE).

| | |
|---|---|
| **Start of the Event:** | Pipe Break |
| **Effect on Plant Operation:** | Initiating Event |
| **Measure of PBF Likelihood:** | Pipe Break Frequency, $\lambda$[1 per year] |
| **Measure of Consequences:** | CCDP [Unitless] |
| **Measure of Risk:** | Core Damage Frequency (CDF) due to the PBF |
| | CDF(PBF) = ($\lambda$ * CCDP) [1/yr.] |

The initiating events as consequences, can be evaluated for two cases:

##### Initiating Event Impact Group

The pipe break causes an initiating event equivalent to the one modeled in the PSA. In this case, Table 3-3 is used for the consequence evaluation. When a pipe break causes an initiating event modeled in the PSA, CCDP can be obtained directly from the PSA results (by dividing the CDF due to the specific IE by the frequency of that IE), assuring truncation is addressed and the initiating event modeled in the PSA is appropriate for the pressure boundary failure under evaluation.

##### Combination Impact Group

The pipe break causes an initiating event, with an additional loss of mitigating ability (not modeled in the PSA). In this case, Table 3-13 provides a simplified way to rank consequences. (the exact results can be obtained from the PSA model by running the specific initiator case, with the mitigating system assumed unavailable). Since the purpose of the consequence evaluation is to provide only an appropriate rank for CCDP, and not an exact number, Table 3-13 provides a conservative guide.

Illustration

The initiator is loss of PCS (a plant trip with a loss of the power conversion system). In addition, the motor driven EFW pump is lost. The backup systems remaining for heat removal (see Figure 3-3), are turbine EFW, AFW and feed and bleed. From plant-specific data, the train "worth" of those systems is: turbine EFW - 0.5 train, AFW - 0.5 train, feed and bleed - 1 train; for a total of 2 trains. Therefore, two backup trains are available and, from Table 3-13, the corresponding consequence rank is medium. The rank for the "Loss of PCS" initiator, from Table 3-4, is also medium.

### *3.3.3.5.2 Standby Configuration*

A pipe break occurs in a standby system, and, after it is discovered, the plant enters the allowed outage time (AOT) defined in the Technical Specification. In the consequence evaluation, AOT is referred to as "exposure time." This is because, during the AOT, the plant's mitigating ability is reduced. (During the "exposure time," the plant may be subjected to a spectrum of initiating events, which may require the operation of the disabled system.)

| | |
|---|---|
| **Start of the Event:** | Pipe Break |
| **Effect on Plant Operation:** | Disabled Safety System/Train, entering AOT |
| **Measure of PBF Likelihood:** | Pipe Break Frequency, $\lambda$ [1 per year] |
| **Measure of Consequences:** | CCDP = [CDF (F) – CDF(Base)] * $T_E$,<br><br>where CDF (F) is CDF for the year, given a train/system failure, $T_E$ is exposure time (detection time + AOT) |
| **Measure of Risk:** | CDF(PBF) = ($\lambda$ * CCDP) [1 per year] |

Table 3-5 provides a simplified way to rank consequences when a pipe break results in a loss of a single or multiple train and/or system. It provides a conservative, simplified substitute for the PSA importance measures (which are difficult to apply in their original form, due to pressure boundary failure specific effects, exposure time, location-specific recoveries, etc.)

Illustration

A pipe break results in the loss of an AFW train. After the break is discovered, the plant enters a "Long AOT." AFW is called upon to mitigate transient (anticipated events). More than three trains are still available to satisfy the secondary heat removal function (see Figure 3-3): main feedwater, emergency feedwater, and feed and bleed. Therefore, from Table 3-5, the consequence rank is low.

### *3.3.3.5.3 Demand Configuration*

A pipe break occurs when system operation is required by an independent demand. For example, a small LOCA event requires HPCI operation, and a HPCI start on demand is assumed to result in an additional break, thereby disabling HPCI.

| | |
|---|---|
| **Start of the Event:** | An Independent Initiator |
| **Effect on the Plant Operation:** | Safety System/Train Fails on Demand Due to PBF |
| **Measure of PBF Likelihood:** | An Actual Measure of PBF Likelihood: Pipe Failure on Demand, $\lambda_D$ |
| | A Substitute Measure of PBF Likelihood: Pipe Standby Failure Frequency $\lambda$ [1/yr.] |
| | Note $\lambda_D = \lambda * T_t$, where $T_t$ is mean time between tests, or demands |
| **Measure of Consequences:** | An Actual Measure of Consequences: |
| | Increase in CDF: |
| | $[CDF(F_D) - CDF(Base)]$ [1/yr.] |
| | A Substitute Measure of Consequences: |
| | $CCDP = [CDF(F_D) - CDF(Base)] * T_t$ |
| **Measure of Risk:** | $CDF(PBF) = \lambda_D * [CDF(F_D) - CDF(Base)]$ |
| | $= \lambda * T_t * [CDF(F_D) - CDF(Base)]$ |
| | $= (\lambda * CCDP)$ [1/yr.] |

Note: In this configuration, substitute measures are introduced, so that the measure of pressure boundary failure likelihood is always the same: yearly frequency of pipe failure.

Because the measure of importance of a system lost on demand would be similar to that of a system lost in a standby configuration, Table 3-5 is used. The main difference between the two cases is exposure time which, in this case, is considered to be the time since the last demand (either the test interval or all year).

#### Illustration

Given a demand for HPSI operation at a PWR, a pipe break results in the loss of a HPSI train. HPSI is called upon to mitigate design basis Category IV events (i.e., LOCAs). Given a small LOCA, two backup trains of HPSI are still available, to satisfy the high pressure inventory makeup function (Figure 3-3). Since the third HPSI division requires operator actions for actuation, those two HPSI trains are credited as one. Given an exposure time of "between test," unexpected frequency of challenge, and one backup train, from Table 3-5, the corresponding consequence rank is medium, given the containment was not affected.

HPSI is also called upon to mitigate transient events, if other means of secondary heat removal fail (i.e. required for Feed and Bleed action). In this case, we have an anticipated frequency of challenge, and three (backup) trains for secondary heat removal (see Figure 3-3), before the HPSI operation is called upon. From Table 3-5, the corresponding consequence rank is low. Therefore, the more critical evaluation is that of the HPSI train as a mitigating train for small LOCA events.

### 3.3.4 Other Modes of Operation

The consequence evaluation discussed in the previous sections is defined assuming at-power operation. Generally, the at-power plant configuration are considered to be more critical in evaluating the risk from pressure boundary failures. This is true because the likelihood of pressure boundary failures is higher at-power than during other modes of operation, since the plant is critical and at high pressures and temperatures. In addition, the consequences of pressure boundary failures are more severe at-power, since the plant requires immediate response to control reactivity, heat removal, and inventory.

Nevertheless, the pressure boundary failures could potentially significantly affect plant safety during other modes of operation including shutdown. Therefore, all pipe segments that are not already classified in a high consequence category should be evaluated for their potential impact on other modes of operation. If the impact due other modes of operation is more limiting than at power, the higher consequence category should be used.

If the plant has performed a shutdown PSA, the important initiators and systems are already identified for shutdown operation, and so are their impact on CDF. If a shutdown PSA is not available, the impact of pressure boundary failures on CDF during shutdown needs to be evaluated. The major characteristics to be considered in the consequence evaluation are defined as follows:

- The system operations, safety functions, and success criteria change in different stages of other modes of operation.
- The exposure time for the majority of the piping associated within other modes of operation less than 10 percent per year. The exposure time associated with being in a more risk significant configuration is even lower, depending on the function or system that is being evaluated.
- The unavailability of mitigating trains could be higher due to planned maintenance activities. Shutdown guidelines need to be evaluated to assure that sufficient redundancy is protected during different modes of operation.
- Recovery time may be longer, and allows for multiple operator actions.

The system requiring special attention during evaluation of shutdown operation is the shutdown cooling system. Pipe breaks in this system that can cause a loss of inventory or loss of shutdown cooling need to be evaluated in detail, and CCDPs due to these breaks need to be estimated.

### 3.3.5 External Events

The consequence evaluations in the previous sections are based on the plant PSA, and internal initiators. Although all the plants have performed an Individual Plant Examination for External Events (IPEEE), not all plants have made external events an integral part of their PSA models. Therefore, all pipe segments, not already classified in the high consequence category, need to be evaluated for their potential impact while responding to external events.

The external events should be evaluated from two perspectives, events such as seismic, can cause pressure boundary failures, and events, such as fires, do not affect pressure boundary failure likelihood, but create demands which may cause pressure boundary failure.

Seismic IPEEE analysis should include consideration of the seismic-induced pressure boundary failures. Pressure boundary failures in combination with a seismic event should also be addressed in this evaluation. The information from the seismic study to be used in this evaluation include:

- Seismic capacity of the piping,
- Safety functions significantly affected by seismic events,
- The most critical seismic scenarios and backup systems.

It should be noted that the likelihood of seismic-induced pressure boundary failures are not expected to depend on the inservice inspection program, which is the subject of this methodology. Extensive NRC and industry sponsored research has shown that well-engineered structures and/or components, even with significant degradation, are substantially robust with respect to seismic response. Thus, it is more important to design inspection programs to prevent pressure boundary failures in piping credited for mitigating functions after an important seismic event.

In general, the evaluation of external events should address more likely scenarios where the pipe breaks on-demand while responding to an external event. The evaluation needs to be performed to ensure that certain external events, in combination with postulated pressure boundary failure, do not jeopardize the "single failure" criteria. A good example of this is a fire in the control room or cable vault, which could require an alternative shutdown from outside of the control room. The pressure boundary failures in systems that are operated from the remote shutdown panel, should be evaluated for those scenarios. If the impact due external events is more limiting than from internal initiators, the higher consequence category should be used.

### 3.3.6 Application of the Plant-Specific PSA

The consequence evaluation described above is based upon PSA fundamental principles, insights and quantitative validations. CCDP and CLERP values are estimated for each type of consequence. Lookup Tables 3-3, 3-5, 3-13, and 3-14 are used to determine consequence categories, and are based on CCDP/CLERP numerical values. The lookup tables are specifically designed to simplify numerical evaluation and to provide an appropriate consequence rank, without intensive PSA quantifications.

Application of a plant-specific PSA in this methodology is summarized below:

- PSA model and success criteria are used to define safety functions and backup trains,
- PSA results for all initiators are applied directly in Table 3-3 (see example in Table 3-4),
- PSA system and/or train unavailabilities are used to determine the equivalent train "worth" for each backup train,
- PSA results are used to determine conditional LERF, given core damage, and to identify event sequences that provide the dominant contribution to LERF,
- Plant-specific failure data are used for different containment isolation valves,
- Internal flood results are used in the analysis of spatial effects,
- IPEEE results are used in the evaluation of external events, and
- Shutdown PSA (if available) is used in the evaluation of other modes of operations.

Since the consequence rank is based on the CCDP and CLERP ranges, and not on a specific CCDP and CLERP values, the methodology results are insensitive to minor changes in the PSA model and assumptions. CCDPs and CLERPs are used as consequence measures, in place of other PSA importance measures such as Fussell-Vesely (FV), risk achievement worth (RAW) and risk reduction worth (RRW), because:

1. CCDP and CLERP are independent of the pressure boundary failure likelihood; FV and RRW are functions of the pressure boundary failure likelihood.

2. CCDP and CLERP are natural importance measures for initiating events; there are problems in applying RAWs when evaluating pressure boundary failures resulting in initiating events.

Since CCDPs and CLERPs as consequence measures are independent of pipe failure likelihood, they can be used in combination with the pressure boundary failure likelihood in the risk matrix (defined in Section 3.5) to produce meaningful risk measures. Lookup Tables 3-3, 3-5, and 3-13, used in the consequence evaluation, have been validated by using PSA runs during the pilot application process:

Table 3-4 was validated by setting the analyzed initiating event frequency to one, and then quantifying CCDP. Since this table is derived directly from PSA results, validation results are expected to be in complete agreement with Table 3-3 guidelines. Minor differences could occur due to the cut-off value for CDF sequences. Table 3-5 was validated at the pilot plants by setting the affected mitigating system and/or train to failed and then quantifying the corresponding CDF which, with basic CDF and exposure time, defines the CCDP which is needed to determine the consequence rank.

Table 3-13 was validated at the pilot plants by setting the analyzed initiating event frequency to one, and the affected mitigating system and/or train to failed, and then quantifying the CCDP.

The validation results from several different pilot plant applications (full scope and partial scope, BWR and PWR), have shown very good agreement between the CCDPs (consequence ranks) determined from the lookup tables, and those determined from PSA quantification. Examples from one PWR pilot plant are provided in Table 3-15 below:

**Table 3-15**
**Example Consequence Validation Results Based on PSA Quantification**

| Application | Example | PSA Validation: Quantified CCDP | Methodology Lookup Table Estimated CCDP | Consequence Rank |
|---|---|---|---|---|
| Table 3-3 | Small LOCA | 4E-4 | 4E-4 | HIGH |
| Table 3-5 | Loss of HPSI | 2E-5 | 2.5E-5 | MEDIUM |
| Table 3-13 | Loss of one SW train, no recovery | 3E-5 | <1E-4 | MEDIUM |

This agreement supports the lookup tables' application. Use of the lookup tables not only minimize the evaluation time (including excessive quantifications) but also introduce a reality check into the consequence evaluation process. This reality check is as a result of the specific requirement to determine which safety functions are affected as well as the effects on plant mitigative functions. These insights are not always obvious from PSA quantifications, without detailed analysis of resultant CDF and LERF sequences.

## 3.4 Degradation Mechanism Evaluation

### *3.4.1 Piping Failure Potential Assessment*

In addition to pipe failure consequence, application of a risk-informed ISI selection process requires that the piping failure potential also be evaluated. The task of estimating piping failure probabilities can be a difficult and costly aspect of a risk-informed evaluation. In addition, significant uncertainties are associated with any computational estimate employed. The challenge posed to EPRI was to establish a practical cost-effective approach that could be used by plant personnel to account for failure potential. Four methods were considered. These methods included: expert judgment, structural reliability analysis, service experience based failure rates, and degradation mechanism evaluation.

#### 3.4.1.1 Expert Judgment

This approach relies on the elicitation of expert opinion in order to assign numerical estimates for catastrophic or disruptive failures for selected pressure boundary systems and components. It generally calls for the establishment and training of a panel of experts. This panel should have a large base of experience with structural integrity issues at operating nuclear power plants as well

as an understanding of the response of structural materials to various service environments. In early risk-based inspection pilot studies [32] expert judgment was selected as the method for estimating failure probabilities and experts were enlisted from reactor vendors, utilities, federal government, national laboratories, and academia.

Although effectively used in early pilot studies, implementation of this method was deemed not practical for most plants for the EPRI methodology. The process is cumbersome and costly when used on a large scale. Operating plants generally have limited expertise in these areas and will therefore be forced to rely heavily on outside consultants. Previous studies also have shown that significant variations can exist in these predictions. In the absence of any prescriptive guidance, it would be difficult to establish some level of consistency in these predictions when applied at different plants.

#### 3.4.1.2 Structural Reliability Analysis

Structural Reliability Analysis (SRA) employs the use of probabilistic fracture mechanics techniques to calculate the failure probability as a function of time, including the effects of inspection frequency and probability of detection (POD). Through the application of Monte Carlo sampling, the results from a very large number of crack simulations can be tracked and used to determine the fraction of cracks that will not be detected and repaired before failure.

The occasions in which plant engineers need to employ probabilistic fracture mechanics to resolve operating plant issues are extremely rare. Since these analyses are generally not used, most utilities do not maintain the expertise nor engineering tools to perform these calculations. These models are historically computationally intensive and the analyst must make assumptions regarding crack size distributions in the material, assumed stress history (cyclic stresses, mean stresses, number of stress cycles, etc.), and POD. At the time EPRI was developed this RI-ISI methodology, it was viewed that this approach was subject to some difficulty for practical application by utility engineers.

Secondly, the Section XI inservice inspection program and supporting calculations are subject to the applicable requirements of 10CFR50 Appendix B. Therefore, these models must be verified and validated and the calculations must be independently reviewed. This can be difficult and expensive for routine utility applications.

Finally, these models depend heavily on cyclic design stress history and future cyclic loading predictions in order to support the necessary fatigue crack growth calculations. For most plant systems, especially ASME Class 2 & 3 and ANSI B31.1 designed piping, this information is not readily available. Also, service experience [33] has shown no correlation between actual failure probability and design stresses in Design Reports.

#### 3.4.1.3 Service Experience Based Failure Rates

EPRI has collected and analyzed service experience for a variety of uses including the estimation of piping system failure rates. At the beginning of this project, the work by Thomas, [51], Gamble, et al [52,53] and Jamali, et al [27, 28], was used to support this application. Recent work sponsored by EPRI is discussed more fully in Section 2.2.

#### 3.4.1.4 Degradation Mechanism Evaluation

Service experience [33] has shown no correlation between actual failure probability and design stresses in the design report. Failures typically result from degradation mechanisms and loading conditions (i.e., IGSCC, flow accelerated corrosion, thermal stratification, etc.) not anticipated in the original design. Since the likelihood of a piping failure is strongly dependent upon the presence of an active degradation mechanism [51,52,53], the relative probability of pipe rupture can therefore be determined by identifying and evaluating the type of degradation mechanism present in a pipe segment. In this approach, the degradation mechanisms in a pipe segment are identified by comparing actual piping design and operating conditions to a well-defined set of material and environmental attributes.

This approach was selected because:

1. Degradation mechanism attributes can be identified physically and consistently applied on a plant and pipe segment basis.

2. Utilities are familiar with this type approach since it has been used previously for various plant specific licensing evaluations.

3. It can be implemented by utility engineers and applied in a consistent fashion.

4. Sufficient service data is available to rank degradation mechanisms relative to their potential to produce a large pipe break.

5. Results of SRA are consistent with the degradation mechanism evaluation results, in that rupture frequencies estimated via SRA techniques are very low unless an active degradation mechanism is being modeled.

The identification of degradation mechanisms is a precursor for the effective application of various computational models discussed previously.

### *3.4.2 Degradation Mechanism Descriptions and Attributes*

The purpose of this evaluation is to identify degradation mechanisms that can be present in piping within the selected system boundaries. In this process, the following design, fabrication, operational conditions, and service experience should be considered.

#### Design Characteristics

Design conditions include material selection, pipe size and schedule, component type (fitting type, ANSI standard, etc.), and other attributes unique to the system layout. It should be taken into account that design conditions vary between systems and can occasionally vary within a system.

## Fabrication Practices

Fabrication practices include material selection, weld wire, heat treatment, etc. It is expected that piping elements subjected to nuclear standards will not be exposed to damage mechanisms due to fabrication practices. However, past experience has shown that even nuclear standards have not prevented damage from phenomena unknown at the time of installation.

## Operating Conditions

Operating conditions determine the piping elements' internal and external conditions that affect material degradation. These include operating temperatures and pressures, fluid conditions (stagnant, laminar, turbulent flow), fluid quality (primary water, raw water, dry steam, etc.), chemical control, and service environment (humidity, radiation, etc.).

## Service Experience

Service experience provides confirmation that damage mechanisms identified for a specific location are appropriate and complete.

Many of the degradation mechanisms active in nuclear plants are present as a result of the combination of environment, service conditions, and operating requirements. As such, their presence cannot be avoided, and plant operators must therefore implement the appropriate measures to manage these degradation mechanisms.

The majority of piping system degradation results from growth-type degradation mechanisms. In these cases, a defect first initiates and then, over time, grows to the point of failure. Unless there is some abnormal loading, failure results in a leak. These mechanisms lend themselves well to the periodic inservice volumetric examinations as a means of managing the structural integrity of the component.

For any integrity inspection or examination activity, the success rate or probability of identifying existing service induced degradation will depend on three main factors. These include:

1. The probability that a flaw or degradation is present at the location, P(FLAW);
2. The probability that you inspect the location containing the flaw or degradation, P(ISI); and
3. The probability that the inspection method employed will detect the flaw or degradation at the selected location, P(DETECT).

Mathematically we can express the overall success or detection probability as

$$\mathbf{POD = P(FLAW)\ f\ P(ISI)\ f\ P(DETECT)} \qquad \textbf{Eq. 3-5}$$

The EPRI RI-ISI method has been designed to maximize the rate of success or probability of detecting existing service induced degradation in piping. By improving the overall success rate, piping failure and rupture frequencies are expected to decrease.

Service experience has demonstrated that all these factors can be improved and the overall success rate of the inspection process increased by implementing an 'inspection for cause' process. This process needs to include the following key aspects: 1) identify potentially active degradation mechanism(s), 2) select inspection locations in which the impact of the degradation mechanism is most severe, and 3) implement appropriate inspection methods with qualified inspectors. These key aspects are incorporated in the EPRI methodology in the degradation mechanism assessment, element selection, and inspection for cause procedures.

### 3.4.2.1 Degradation Mechanism Assessment

The objective of this task is to identify which degradation mechanisms are present in a piping segment within the selected system boundaries. Industry experience has shown no correlation between original design stresses and failure probabilities. In most cases, failures resulted from the presence of an active degradation mechanism not identified in the design process and directly related to those system inherent conditions. The degradation mechanism procedures was developed to evaluate each system by comparing the actual piping design, system functions, and operating conditions to a set of material and environmental attributes, Table 3-16.

In performing this evaluation, a review of the system and system boundaries is required. A series of input sources, including isometric drawings, plant procedures (especially operating procedures) and programs, system and material specifications, design reports, various plant databases, and other analyses, need to be reviewed. The review focuses on the design characteristics, fabrication practices, operating conditions, and plant and industry service history of piping segments within the specific system boundaries.

**Table 3-16**
**Degradation Mechanism Criteria and Susceptible Regions**

| Degradation Mechanism | | Criteria | Susceptible Regions |
|---|---|---|---|
| TF | TASCS | – NPS > 1 inch, and<br>– pipe segment has a slope < 45° from horizontal (includes elbow or tee into a vertical pipe), and<br>– potential exists for low flow in a pipe section connected to a component allowing mixing of hot and cold fluids, or<br>potential exists for leakage flow past a valve (i.e., in-leakage, out-leakage, cross-leakage) allowing mixing of hot and cold fluids, or<br>potential exists for convection heating in dead-ended pipe sections connected to a source of hot fluid, or<br>potential exists for two phase (steam/water) flow, or<br>potential exists for turbulent penetration into a relatively colder branch pipe connected to header piping containing hot fluid with turbulent flow, and<br>– calculated or measured $\Delta T > 50°F$, and<br>– Richardson number > 4.0 | Nozzles, branch pipe connections, safe ends, welds, heat affected zones (HAZs), base metal, and regions of stress concentration |
| | TT | – operating temperature > 270°F for stainless steel, or<br>operating temperature > 220°F for carbon steel, and<br>– potential for relatively rapid temperature changes including<br>cold fluid injection into hot pipe segment, or<br>hot fluid injection into cold pipe segment, and<br>– $\lvert\Delta T\rvert > 200°F$ for stainless steel, or<br>$\lvert\Delta T\rvert > 150°F$ for carbon steel, or<br>$\lvert\Delta T\rvert > \Delta T$ allowable (applicable to both stainless and carbon) | |

**Table 3-16 continued**
**Degradation Mechanism Criteria and Susceptible Regions (continued)**

| Degradation Mechanism | | Criteria | Susceptible Regions |
|---|---|---|---|
| SCC | IGSCC (BWR) | – evaluated in accordance with existing plant IGSCC program per NRC Generic Letter 88-01 | Welds and HAZs |
| | IGSCC (PWR) | – austenitic stainless steel (carbon content ≥ 0.035%), and<br>– operating temperature > 200°F, and<br>– tensile stress (including residual stress) is present, and<br>– oxygen or oxidizing species are present<br>OR<br>– operating temperature < 200°F, the attributes above apply, and<br>– initiating contaminants (e.g., thiosulfate, fluoride or chloride) are also required to be present | |
| | TGSCC | – austenitic stainless steel, and<br>– operating temperature > 150°F, and<br>– tensile stress (including residual stress) is present, and<br>– halides (e.g., fluoride or chloride) are present, and<br>– oxygen or oxidizing species are present | Base metal, welds, and HAZs |

**Table 3-16 continued**
**Degradation Mechanism Criteria and Susceptible Regions (continued)**

| Degradation Mechanism | | Criteria | Susceptible Regions |
|---|---|---|---|
| SCC (cont.) | ECSCC | – austenitic stainless steel, and<br><br>– operating temperature > 150°F, and<br><br>– tensile stress is present, and<br><br>– an outside piping surface is within five diameters of a probable leak path (e.g., valve stems) and is covered with non-metallic insulation that is not in compliance with Reg. Guide 1.36,<br><br>OR<br><br>– austenitic stainless steel, and<br><br>– tensile stress is present, and<br><br>an outside piping surface is exposed to wetting from concentrated chloride-bearing environments (i.e., sea water, brackish water, or brine) | Base metal, welds, and HAZs |
| | PWSCC | – piping material is Inconel (Alloy 600), and<br><br>– exposed to primary water at T > 570°F, and<br><br>– the material is mill-annealed and cold worked, or<br><br>cold worked and welded without stress relief | Nozzles, welds, and HAZs without stress relief |

**Table 3-16 continued**
**Degradation Mechanism Criteria and Susceptible Regions (continued)**

| Degradation Mechanism | | Criteria | Susceptible Regions |
|---|---|---|---|
| LC | MIC | – operating temperature < 150°F, and<br>– low or intermittent flow, and<br>– pH < 10, and<br>– presence/intrusion of organic material (e.g., Raw Water System), or<br>– water source is not treated with biocides, or | Fittings, welds, HAZs, base metal, dissimilar metal joints (for example, welds and flanges), and regions containing crevices |
| | PIT | – potential exists for low flow, and<br>– oxygen or oxidizing species are present, and<br>– initiating contaminants (e.g., fluoride or chloride) are present | |
| | CC | – crevice condition exists (i.e., thermal sleeves), and<br>– operating temperature > 150°F, and<br>– oxygen or oxidizing species are present | |
| FS | E-C | – cavitation source, and<br>– operating temperature < 250°F, and<br>– flow present > 100 hrs./yr., and<br>– velocity > 30 ft./sec., and<br>– $(P_d - P_v) / \Delta P < 5$ | Fittings, welds, HAZs, and base metal |
| | FAC | – evaluated In accordance with existing plant FAC program | per plant FAC program |

The identification process begins by obtaining plant design, operating, testing, surveillance, and monitoring information. Sources of this information include:

- SAR
- ISI Isometric Drawings
- P&IDs
- Line Lists

- ISI Program
- Material Specifications
- Instructional Manuals
- System Design Basis Documents
- Load Histograms
- Flow-Accelerated Corrosion (FAC) program
- IGSCC Program Description
- Chemistry Monitoring Programs
- Plant Operating Procedures
- Fatigue Monitoring Programs
- Plant-Specific Service Experience

### *Design Characteristics*

Generally the design characteristics considered include the piping material, the pipe size and schedule, component type, and other characteristics which were unique to each system. These design characteristics are of most significance when identifying those mechanisms where piping materials played a significant role.

### *Fabrication Practices*

Even though piping elements fabricated to nuclear standards are not expected to be exposed to damage mechanisms, experience has shown the presence of damage that was unknown at the time of fabrication. Specific characteristics such as heat affected areas, nozzles, welds, regions of stress concentration, etc., are identified and evaluated in terms of all damage mechanisms.

### *Operating Conditions*

Operating conditions play a significant role in the identification process due to their impact on damage mechanisms and primarily because operating conditions vary with every system and occasionally within the system. Operating conditions taken into consideration include but are not limited to:

- Temperatures and pressures,
- Fluid conditions (stagnant, laminar, and turbulent flow),
- Fluid quality (primary borated water, raw water, dry steam),
- Chemical control and environmental conditions,

Primary emphasis is given to operating temperatures as opposed to design temperatures, where operating temperatures include transient conditions, such as, either high or low temperatures, the

mixing of cold and hot fluids, the presence of two-phase flow due to steam over water conditions, rapid temperatures changes, etc.

The criteria that are used to decide whether a damage mechanism could occur or not, as presented in Table 3-16, are conservatively set such that if the criteria are not met, one can confidently rule out the potential for that mechanism.

#### 3.4.2.2 Service Experience and Susceptibility Review

An in-depth review of plant and industry databases and station documents is required to characterize each station's operating experience with respect to piping pressure boundary degradation. This service history and susceptibility review is conducted for each in-scope system not to supplant, but to supplement the industry review. Plant specific data collection is considered appropriate due to the uniqueness of particular plant configurations and service conditions that may have resulted in the manifestation of a damage mechanism in such a manner as to not be identified in the EPRI industry review. Additionally, the site-specific review will identify any mechanisms or events potentially resulting in piping failures as well as actual through-wall failures. Plant specific service history is considered a key element in identifying degradation mechanism susceptibility. This information is also utilized in the element selection process. Collection of this data allows fine-tuning of the element selection process where applicable and provides additional confirmation of the appropriate assignment of damage mechanisms to systems or portions thereof.

The determination of a plant's potential for water hammer is highly dependent upon its service experience with phenomenon. In general, the determination of the susceptibility of a given system to water hammer is more dependent upon plant specific operational service history than generic industry data. This is in contrast with the potential susceptibility of a system to a degradation mechanism. The system conditions, which cause or promote the existence of a degradation mechanism are in general very similar from plant-to-plant. As such, the ultimate determination of the potential presence of a degradation mechanism should primarily be based on industry service experience. In the case of a damage mechanism such as IGSCC, even though its presence may have never been identified at a particular plant, it could still very well be active due to system environmental conditions.

In assessing the potential for a water hammer event though, a greater measure of variability exists between plants. The potential for a water hammer event is solely a function of a plant's unique system configuration and operational and maintenance practices. The configuration and operationally sensitive nature of the water hammer phenomenon can be substantiated by the plant's service history. When coupled with consideration of industry service experience with this phenomenon as described below, the susceptibility of each system can be determined.

Each plant should also review and take into consideration the information provided in EPRI TR-106438, "Water Hammer Handbook for Nuclear Plant Engineers and Operators", dated May, 1996. This document, which provides a comprehensive compilation and analysis of water hammer events in U.S. plants, indicates that most water hammer events occurred in the early stages of plant operation. As experience was gained in the operation of the plants, the frequency of water hammer events have progressively decreased in the industry at large.

Results from a service history and susceptibility review conducted at a pilot plant are excerpted and provided below in Table 3-17 [45].

## Table 3-17
## Example Service History and Susceptibility Review Results for the Reactor Coolant System

| Source Documents / Databases Reviewed for Historical Piping Pressure Boundary Degradation Occurrences at ANO-1 | Damage Mechanisms | | | | | | | | | | | | Additionally Considered | |
|---|---|---|---|---|---|---|---|---|---|---|---|---|---|---|
| | Thermal Fatigue | | Stress Corrosion Cracking | | | | Localized Corrosion | | | Flow Sensitive | | Mechanical | Water | Other |
| | TASCS | TT | IGSCC | TGSCC | ECSCC | PWSCC | MIC | PIT | CC | E-C | FAC | VF | Hammer | Findings |
| Station Information Management System | None | None | None | None | None | None | None | None | None | None | None | PBF(3) | None | (1) PD(2) |
| Paperless Condition Reporting System | PE(4) | None | None | None | None | None | None | None | None | None | None | PBF(3) | None | None |
| Licensing Research System | PE(4) | None | None | None | None | PBF(5) | None | None | None | None | None | PBF(3) | None | PD(2) |
| Nuclear Plant Reliability Database System | None | None | None | None | None | None | None | None | None | None | None | None | None | None |
| ANO-1 ISI Program Records | None | None | None | None | None | None | None | None | None | None | None | None | None | (1) |
| Control Room Station Log | None | None | None | None | None | None | None | None | None | None | None | None | None | None |
| System Upper Level Documents | None | None | None | None | None | None | None | None | None | None | None | None | None | None |
| Other Station Documents | P(6) | P(6) | None | None | None | P(6) | None | None | None | None | None | None | None | None |

Legend:

**P** (Precursor) - Includes postulated damage mechanisms and loadings through knowledge of operating parameters, water chemistry, etc. No physical evidence of pressure boundary degradation currently exists. Also includes postulated mechanisms identified as result of this review.

**PE** (Plant Event) - Includes postulated damage mechanisms and loadings as result of observed or potential plant event (e.g., water hammer). No physical evidence of pressure boundary degradation currently exists.

**PD** (Physical Damage) - Includes observed pressure boundary degradation as evidenced by cracking, pitting, wastage, thinning, physical deformation or other deterioration.

**PBF** (Pressure Boundary Failure) - Includes through-wall flaws resulting from effects of identified damage mechanism.

Notes:

1. Ref. JO 00770489 and ISI program records. Multiple indications (surface and subsurface) identified over time in RCS. These indications were either removed (e.g., gouges or linear surface flaws) or evaluated (e.g., laminar or planar subsurface flaws) and determined to be Code acceptable. None of these indications were attributed to inservice damage mechanism & are believed to have been non-service induced (i.e., fabrication or other origin).
2. Ref. JO 00723183, LER 86-006 and IE 86-108 which document corrosion wastage (boric acid) on exterior of P-32A discharge cold leg HPI nozzle due to leakage from above HPI isolation valve (body-to-bonnet leak).
3. Ref. JO 00776670, JO 00776959, JO 00786058, CR 1-89-0029, CR 1-89-0312, CR 1-90-0010, LER 89-002, LER 89-010 and ANO correspondence to the NRC 1CAN107414, 1CAN107420, 1CAN027502 and 1CAN107507 which document small diameter (1½ and 1 inch NPS) cold leg drain line leaks primarily attributable to vibrational fatigue.
4. Ref. NRC Bulletin 88-08, NRC Bulletin 88-11, CR C-88-0047, CR 1-92-0327, CR 1-93-0164, CR 1-98-0117 and ANO correspondence to NRC 0CAN019102, 0CAN088912, 0CAN108806, 0CAN109104, 0CAN119007, 1CAN038903, 1CAN039101, 1CAN068906, 1CAN079201, 1CAN108914, 1CAN128910 & 1CAN129105 which address potential for thermal stratification in RCS.
5. Ref. LER 90-021, which documents small diameter (1 inch NPS) pressurizer level tap nozzle leak attributed to PWSCC.
6. Ref. Calc. No. EPRI-116-310 of ANO-1 RI-ISI pilot application submittal, which identifies potential for TASCS, TT and PWSCC in RCS.

### 3.4.2.3 Application of Degradation Mechanisms Assessment

The results of the RI-ISI pilot evaluations at James A. Fitzpatrick and ANO Unit 2 have been published in EPRI TR-107530, Volumes 1 and 2 [8] and EPRI TR-107531, Volumes 1 and 2 [10], respectively, and provide detailed descriptions of the degradation mechanism evaluation process.

### 3.4.2.4 Degradation Mechanism Descriptions

*Thermal Fatigue*

Mechanism Description

Alternating stresses caused by thermal cycling of a component results in accumulated fatigue usage and can lead to crack initiation and growth.

Attribute Criteria

Austenitic and carbon steel piping segments with operating temperatures less than 270 and 220°F, respectively, are not susceptible to degradation by thermal fatigue. Piping segments having operating temperatures greater than these values should be evaluated for the potential for degradation from thermal transients and thermal stratification, cycling, and striping as indicated in the following:

*Thermal Transients*

Areas considered susceptible to thermal fatigue include pipe segments where there is relatively rapid cold (hot) water injection with delta temperature greater than 150°F for carbon steel pipe and 200°F for austenitic steel pipe. When these temperature changes are exceeded, additional evaluations can be performed to determine if delta temperature is greater than delta temperature allowable. Procedures in EPRI report TR-104534, Vols. 1-4, "Fatigue Management Handbook" [34] can be used to determine delta temperature allowable.

*Thermal Stratification Cycling and Striping*

Areas where there can be leakage past valves separating hot and cold fluids and regions where there might be intermittent mixing of hot and cold fluids caused by fluid injection are considered to be susceptible to degradation from thermal fatigue. Exceptions are for pipe segments where the pipe diameter is 1 inch or less, or the slope of the segment is 45° or more from the horizontal. When these criteria are exceeded, additional evaluations can be performed to determine if the maximum delta temperature is greater than 50°F or the Richardson number is greater than 4.0. (Refer to EPRI report TR-104534 [34], for procedures to compute the Richardson number.)

*Stress Corrosion Cracking (SCC)*

Stress corrosion cracking encompasses several mechanisms as are discussed below.

### *Intergranular Stress Corrosion Cracking (IGSCC)*

Mechanism Description: IGSCC results from a combination of sensitized materials (caused by a depletion of chromium in regions adjacent to the grain boundaries in weld heat-affected zones), high stress applied and residual welding stresses, and a corrosive environment (high level of oxygen or other contaminants).

#### Attribute Criteria

- BWRs: Piping within the scope of the RI-ISI evaluation should be compared to piping included in the existing plant IGSCC inspection program developed in accordance with Generic Letter 88-01, "NRC Position on IGSCC in BWR Austenitic Stainless Steel Piping" [36]. Piping in the RI-ISI evaluation scope should be identified as susceptible to IGSCC for the purpose of RI-ISI evaluation if it is inspected as part of the existing plant IGSCC inspection program.
- PWRs: Welds and heat-affected zones in wrought austenitic steel PWR piping having high dissolved oxygen content and stagnant flow (e.g., stagnant, oxygenated borated water systems) are considered susceptible to degradation from IGSCC. Welds in materials considered to be resistant to sensitization from welding (see NUREG-0313, Rev. 2 [37]) are not susceptible to degradation from IGSCC.

### *Transgranular Stress Corrosion Cracking (TGSCC)*

#### Mechanism Description

TGSCC is stress corrosion cracking that occurs through the grains of the material and usually occurs in the presence of halogens and sulfides. It is not necessarily associated with a particular metallurgical condition, such as grain boundary sensitization, but is affected by high local residual stresses, such as caused by welding or local cold work.

#### Attribute Criteria

In both BWRs and PWRs, austenitic stainless steels are susceptible to TGSCC in the presence of chlorides and oxygen. Nickel alloy and low alloy steels generally pit in the presence of chlorides and oxygen. Low alloy and carbon steels can crack by TGSCC in sulfur bearing environments, such as hydrogen sulfide. However, this environment is not of general interest to light water reactors.

### *External Chloride Stress Corrosion Cracking (ECSCC)*

#### Mechanism Description

The electrochemical reaction caused by a corrosive media upon a piping system.

#### Attribute Criteria

Austenitic steel piping and welds are considered susceptible to chloride corrosion cracking when exposed to chloride contamination (from insulation, brackish water, or concentration of fluids containing chlorides), temperatures greater than 150°F, and tensile stresses.

### *Primary Water Stress Corrosion Cracking (PWSCC)*

#### Mechanism Description

PWSCC occurs when high-temperature primary water is the corrosive medium and is present in combination with a susceptible material and high tensile stress.

#### Attribute Criteria

Piping attachments (e.g., thermowells) are considered susceptible to PWSCC when they are fabricated from mill annealed Alloy 600 that is cold worked or cold worked and welded without subsequent stress relief, exposed to primary water, and operate at temperatures in excess of 570°F. EPRI report TR-103696, "PWSCC of Alloy 600 Materials in PWR Primary System Penetrations" [35], provides additional detail for PWSCC degradation.

The attribute criteria specified for PWSCC in this section are applicable to PWRs. The susceptibility to corrosion cracking from PWSCC is covered for BWRs in the section on IGSCC.

### *Localized Corrosion*

Local corrosion encompasses several mechanisms as are discussed below.

### *Microbiologically Influenced Corrosion (MIC)*

#### Mechanism Description

Microbes, primarily bacteria, have been found to cause widespread damage to low alloy and carbon steels. Similar damage has also been found at welds and heat-affected zones for austenitic stainless steels.

#### Attribute Criteria

Areas considered susceptible to degradation from MIC are piping components with fluids containing organic material or with organic material deposits. The most vulnerable components are raw water systems, storage tanks, and transport systems. Systems with low to intermittent flow conditions, temperatures less than 150°F, and pH below 10 are primary candidates.

EPRI reports TR-103403, "Service Water System Corrosion and Deposition Source Book" [38]; NP-5580, "Sourcebook for Microbiologically Influenced Corrosion in Nuclear Power Plants" [39]; and NP-6815, "Detection and Control of Microbiologically Influenced Corrosion" [40], provide additional information regarding MIC degradation.

### *Pitting (PIT)*

#### Mechanism Description

Pitting corrosion is a form of localized attack on exposed surfaces with greater corrosion rates at some locations than at others. High local concentrations of impurity ions, such as chlorides and sulfates, tend to concentrate in oxygen depleted pits, giving rise to a potentially concentrated aggressive solution in this zone.

#### Attribute Criteria

All structural materials are potentially susceptible to pitting, including austenitic stainless steels, nickel alloys and carbon and low alloy steels. It can occur in low flow or stagnant regions in components, or within crevices, in these materials. Susceptibility to pitting is a strong function of oxygen level and chloride level concentration.

### *Crevice Corrosion (CC)*

#### Mechanism Description

**Crevice corrosion** is the electrochemical reaction caused by an oxygenated media within a piping system.

#### Attribute Criteria

Regions containing crevices (narrow gaps) that can result in oxygen depletion and a relatively high concentration of chloride ions or other impurities are considered susceptible to crevice corrosion cracking.

### *Flow Sensitive (FS)*

These mechanisms consist of Flow Accelerated Corrosion (FAC) and Erosion-Cavitation (E-C).

### *Erosion-Cavitation*

#### Mechanism Description

This degradation mechanism represents degradation caused by turbulent flow conditions, which erode (wear away the metal) the pipe wall by cavitation. Cavitation damage is the result of the formation and instantaneous collapse of small voids within fluid subjected to rapid pressure and velocity changes as it passes through a region where the flow is restricted (e.g., a valve, pump, or orifice).

#### Attribute Criteria

- Regions where $(p_d - p_v)/\Delta p < 5$, and $V > 30$ feet per second and fluid temperature < 250°F are considered susceptible to degradation from erosion-cavitation. Where $p_d$ is the static pressure downstream of the cavitation source (e.g. pump, valve, orifice), $p_v$ is the vapor pressure, $\Delta p$ is the pressure differential across the unit, and V is the flow mean velocity at the inlet of the unit. All pressures are gauge pressures.
- The susceptible region might extend a distance equal to approximately 5D downstream of a pump, flow orifice, throttling valve, pressure-reducing valve, or other potential sources of cavitation. (If an elbow is within 5D of the source of cavitation, then the affected region extends to the first weld past the elbow.)
- EPRI report TR-103198, A Method to Predict Cavitation and the Extent of Damage in Power Plant Piping, Vols. T1 and T2, [41] provide additional guidance for evaluation of erosion-cavitation susceptibility, including more detailed criteria for orifices, bends, and various types of values.
- Standard reducers do not create the potential for erosion degradation. Regions where flow occurs for less than 100 hours per year are not considered to be susceptible to erosion-cavitation degradation.

### *Flow-Accelerated Corrosion (FAC)*

#### Mechanism Description

FAC is a complex phenomenon that exhibits attributes of erosion and corrosion in combination. Factors that influence whether FAC is an issue are velocity, dissolved oxygen, pH, moisture content of steam, and material chromium content.

#### Attribute Criteria

Carbon steel piping with chromium content greater than 1 percent and austenitic steel piping are not susceptible to degradation from FAC. Piping within the scope of the RI-ISI evaluation should be compared to piping included in the existing plant FAC inspection program. Piping in the RI-ISI evaluation scope should be identified as susceptible to FAC for the purpose of RI-ISI evaluation if it is inspected as part of the existing plant FAC inspection program.

EPRI report NSAC/202L, "Recommendations for an Effective Flow-Accelerated Corrosion Program" [42], provides the general guidelines for the identification and inspection of components subject to FAC degradation.

### 3.4.2.5 Degradation Mechanism Categories

Since publication of EPRI TR-106706 [7], EPRI has performed additional work to investigate the correlations between the EPRI degradation mechanism categories and numerical estimates of pipe rupture frequencies resulting from these mechanisms. This work, which is described in References [22,23,24] and in Section 2.2, has validated the basis for these categories as used in the EPRI risk matrix.

The EPRI RI-ISI classification scheme for assignment of segments to the three general classes of failure potential is depicted in Table 3-18, which is similar to Table 4-2 of EPRI TR-106706 [7].

**Table 3-18**
**EPRI System for Evaluation of Pipe Rupture Potential**

| Pipe Rupture Potential | Expected Leak Conditions | Degradation Mechanisms To Which The Segment is Susceptible |
|---|---|---|
| HIGH | Large | Flow Accelerated Corrosion (FAC) |
| MEDIUM | Small | Thermal Fatigue<br>Stress Corrosion Cracking (IGSCC, TGSCC, PWSCC, ECSCC)<br>Localized Corrosion (MIC, Crevice Corrosion and Pitting)<br>Erosion-Cavitation |
| LOW | None | No Degradation Mechanisms Present |

As explained earlier, the logic of this classification scheme is very simple. If there are no known damage mechanisms present in the pipe, the potential for pipe rupture is classified as low. In this case there is high confidence that the potential for rupture due to any known damage mechanism can be ruled out. The potential for pipe ruptures would in this case be determined solely by the likelihood of occurrence of severe loading conditions in excess of the pipe segment capacity, which may or may not be reduced by the presence of some design and construction defects. Another possibility is the occurrence of a pipe rupture due to some heretofore-unknown damage mechanism, although this is considered unlikely for the reasons detailed below.

When the pipe segment has been identified as having the conditions necessary for one or more well defined damage mechanisms, the likelihood of pipe rupture is obviously higher. This is because the presence of damage mechanisms may lead to pipe failures directly, or they can reduce the capacity of the pipe segment to withstand transient and severe piping loads if and when they occur. Hence, on a qualitative basis it should be clear that the presence of conditions

necessary for piping damage mechanisms would lead to a higher rate of occurrence of pipe failures and ruptures than the case where no such conditions are present, all other factors being equal. These considerations led to three natural categories of pipe failure potential.

It is also possible the a pipe segment, subject to a degradation mechanism with a moderate break potential, may be moved into the high category if the pipe segment is known to be subject to waterhammer loads. The dynamic condition may have already been analyzed and determined to be acceptable; however, if we identify susceptibility to a degradation mechanism, this segment would be raised to the break potential category of high.

## 3.5 Risk Characterization

### *3.5.1 Segment Definition*

In early RI-ISI studies, systems were simply divided into piping segments between major pieces of equipment (i.e., pumps, valves, heat exchangers, etc.), where a direct effect from the pipe failures is expected to be the same. In that approach, any one particular pipe segment could be subject to different degradation mechanisms at different locations within the piping segment. Also, the pipe segment could run through different areas of the plant. Consequently, the indirect effects or spatial impacts associated with a projected pipe break could be different. In the EPRI methodology, the pipe segments definition was established so the program results would not be dependent on segment size or the number of segments. For the purposes of performing a RI-ISI evaluation, pipe segments are defined as a continuous run of pipe in which the following are true:

1. The consequence (direct and indirect impacts) of a imposed pipe break are the same at any location in the pipe segment, and

2. The potential degradation mechanisms present are the same at any location in the pipe segment, and

3. The pipe segment is located in the same area of the plant - spatial impacts are the same, and

4. The pipe segment consists of a continuous run of piping.

Using this definition, the length of the pipe segment is not determined based on system configurations which can vary significantly from one plant to another; but on the independent consequence and failure potential assessments. By defining a pipe segment in this manner, any differences in CDF contribution between individual elements within the pipe segment will be minimized.

Segments are defined after both the consequence and degradation mechanism evaluations are completed. In the consequence evaluation, as in the degradation mechanism evaluation, consequence and degradation mechanism segments are defined, which are combined into final segments during the risk evaluation.

The segments failure probabilities are defined by degradation mechanism categories that define the relationship between leak size and degradation mechanism. The segment failure consequences are defined by consequence categories that define the relationship between the severity of consequences and the impact on plant safety and performance. The segment risk categories are formed by combinations of the degradation mechanism and consequence categories, as discussed below.

### 3.5.2 Risk Matrix

The risk of pipe segment failure is evaluated on the basis of the expected likelihood of the event and the expected importance of the consequence. The importance of the consequences is presented by the consequence categories. The likelihood of failure in this analysis is estimated based on the segment exposure to different degradation mechanisms and is represented by the degradation mechanism categories.

As is common in a qualitative risk-informed approach, the graphic method is used to illustrate the effects of these two parameters and to serve as a base for the selection of risk-important segments. The graphic structure used in this analysis, known as the risk matrix, is shown in Figure 3-4. Degradation mechanism categories shown in the figure are defined in Section 3.4. Consequence Categories shown in the figure are defined in Section 3.3. Figure 3-4 is used to define risk categories, which are identified on the risk matrix and described below.

| POTENTIAL FOR PIPE RUPTURE<br>PER DEGRADATION MECHANISM SCREENING CRITERIA | CONSEQUENCES OF PIPE RUPTURE<br>IMPACTS ON CONDITIONAL CORE DAMAGE PROBABILITY AND LARGE EARLY RELEASE PROBABILITY | | | |
|---|---|---|---|---|
| | NONE | LOW | MEDIUM | HIGH |
| HIGH<br>FLOW ACCELERATED CORROSION | LOW<br>Category 7 | MEDIUM<br>Category 5 | HIGH<br>Category 3 | HIGH<br>Category 1 |
| MEDIUM<br>OTHER DEGRADATION MECHANISMS | LOW<br>Category 7 | LOW<br>Category 6 | MEDIUM<br>Category 5 | HIGH<br>Category 2 |
| LOW<br>NO DEGRADATION MECHANISMS | LOW<br>Category 7 | LOW<br>Category 7 | LOW<br>Category 6 | MEDIUM<br>Category 4 |

**Figure 3-4**
**Risk Matrix and Risk Categories**

### *3.5.3 Risk Categories*

The three degradation mechanism categories and four consequence categories are combined into seven risk categories. Those categories are shown in Figure 3-4 and defined below:

| | |
|---|---|
| Risk Category 1: | High consequences and high failure potential |
| Risk Category 2: | High consequences and medium failure potential |
| Risk Category 3: | Medium consequences and high failure potential |
| Risk Category 4: | High consequences and low failure potential |
| Risk Category 5: | Medium consequences and medium failure potential, or low consequences and high failure potential |
| Risk Category 6: | Medium consequences and low failure potential, or low consequences and medium failure potential |
| Risk Category 7: | Low consequences and low failure potential, or no consequences and any failure potential |

The Risk Categories shown in Figure 3-4 are then further combined into three risk regions for more robust and more efficient utilization. Three risk regions also account for uncertainties in the risk categorization, and ensure that 1) high consequence segments are considered for all likelihoods of failure, and 2) segments with the potential for large leaks (high likelihood of failure) are considered for all consequence categories (except "none").

Plants with or without leak before break (LBB) analyses are treated the same by the EPRI methodology. The consequence assessments postulate a range of break sizes ranging from leaks up to and including full pipe rupture. The limiting case with respect to conditional core damage probability is used for the purpose of characterizing the risk ranking of the pipe segment. Hence, LBB considerations have no impact in applying the EPRI methodology.

Sensitivity studies for the major assumptions can be performed on a plant-specific basis. Because of the risk ranges defined in the Risk Matrix (Figure 3-4), this methodology is less sensitive to the different assumptions.

The EPRI Methodology uses CDF and LERF (due to pipe failures) as a major risk metric.

$$\text{CDF (due to pipe failures)} = [\text{pipe failure frequency}] * [\text{CCDP}] \qquad \textbf{Eq. 3-6}$$

$$\text{LERF (due to pipe failures)} = [\text{pipe failure frequency}] * [\text{CLERP}] \qquad \textbf{Eq. 3-7}$$

LERF is also used implicitly, by monitoring containment isolability and performance. If the consequence evaluation indicates an unfavorable impact on containment isolation or bypass performance, the risk category determined on the basis of CCDP alone is increased from low to medium, or from medium to high depending on the CCDP value. This helps to ensure that the risk of LERF is controlled, as discussed in Section 3.3.3.4.

As discussed more fully in Section 3.7, bounding estimates of pipe rupture frequencies and conditional core damage and large early release probabilities can be used to show that any pipe element classified as low risk would have an upper bound core damage frequency estimate on the order of 1E-10 and 1E-11 per year. Hence the entire collection of low risk pipe segments which could be on the order of about 1,000 segments or so for an entire plant would have a very small contribution to CDF and LERF.

Consideration of probability of detection (POD) is made in a number of different ways in the EPRI method. However, POD is not used in the risk assessment portion of the EPRI methodology. That is, the assessment of a location's susceptibility to degradation hence its failure potential, its consequence of failure (independent of failure potential) and the resulting risk contribution (i.e., failure potential times consequence of failure) are not a function of POD.

POD is however a contributor to the success of the risk management function. That is, enhancing the quality of POD assures a more successful risk management strategy over existing practices. The EPRI selection and inspection process utilizes the engineering evaluation conducted as part of the FMEA of the piping components which identifies the susceptibility of the component(s) to each degradation mechanism. When elements are selected for inspection, this information is used to optimize the inspection to look for the tell tale signs of that degradation mechanism. The whole EPRI approach is designed to maximize the NDE reliability of elements selected for inspection.

## 3.6 Inspection Element Selection

### *3.6.1 EPRI RI-ISI Program Objectives*

The objectives of the EPRI RI-ISI program are to reduce cost and person-rem exposures associated with current inservice inspection programs and at the same time maintain or improve safety. Therefore, the risk reduction benefits associated with the implementation of the RI-ISI program should be greater than or equal to the risk reduction benefits afforded by the plant's current ASME Section XI program. The inspection strategy applied in the EPRI RI-ISI method was designed to satisfy this objective and was confirmed to do so in the completed industry pilot application studies.

### *3.6.2 ASME Section XI Requirements*

The ASME Section XI inspection program philosophy, sampling population criteria, and the sampling percentages for inspection element selection have not changed substantially in the past 20 years. The current ASME Section XI examination requirements are summarized in Table 3-19 below.

**Table 3-19**
**Leak Test and NDE Inspection Requirements for Piping Systems**

| | Percent Weld Population Examined | |
|---|---|---|
| | **Leak Test** | **Nondestructive Examination** |
| Class 1 | 100% | 25% for NPS > 1" |
| Class 2 – HPI (PWRs) | 100% | 7.5% for NWT > 1/5" and NPS ≥ 2" through NPS ≤ 4" |
| Class 2 | 100% | 7.5% for NWT ≥ 3/8" and NPS > 4" |
| Class 3 | 100% | None |
| Non-Code | None | None |

The Section XI inspection rules were established only for ASME Class 1, Class 2, and Class 3 piping. No examination requirements were included for other piping outside of these classifications. This piping, sometimes referred to as "non-Code" piping, is usually designed to non-nuclear ANSI B31.1 design standards.

All Class 1, 2, and 3 piping receive system leakage tests at nominal operating pressures and temperatures either each refueling outage (Class 1) or each inspection period (Class 2 and 3).

Volumetric and surface NDE are specified for Class 1 and Class 2 piping only. No volumetric or surface NDE is required for Class 3 piping. In addition, some Class 1 and Class 2 piping is exempt from NDE. The Class 1 NDE requirements apply to all pipe sizes greater than 1" nominal pipe size (NPS). The Class 2 NDE requirements are dependent upon nominal wall thickness (NWT) and NPS as indicated in Table 3-19 above. Based on the NWT criteria, dependent upon plant design, entire systems or portions thereof may not be subject to examination. As discovered in the EPRI RI-ISI pilot plant applications, the results of the RI-ISI assessment would expand the scope of Class 2 piping examined to include piping previously not subject to NDE per current ASME Code requirements.

The examination population specified for Class 1 and Class 2 piping in Section XI is based on a prescribed percentage of the total number of pressure retaining welds (inspection elements) within that piping classification. For Class 1 piping, 25 percent of all the welds are examined each 10 year inspection interval. For Class 2 piping, the sampling criteria is reduced to 7.5 percent.

### 3.6.3 RI-ISI Inspection Strategy

The inspection strategy employed was designed to meet the following goals:

- The criteria applied to define minimum inspection populations need to be simple and straightforward so that it can be consistently applied regardless of the design. This type approach will benefit not only the industry, but also the regulator.
- The sampling population criteria need to be sensitive to the type of degradation mechanism present. For some mechanisms, the inspection population needs to be based on performance trending and degradation rate predictions. This is especially true for degradation mechanisms such as FAC.
- The examination distribution should be weighted toward those pipe segments in the higher risk categories.
- The element selection process and examination methods employed should be designed to ensure that the overall success rate or probability of detection (POD) is improved. This implies that the failure and rupture frequencies under the new program will be reduced.

### 3.6.4 EPRI Risk-Informed Inspection Scope

The purpose of the inspection element selection process is to determine specifically which elements (often called locations) are to be inspected. An element is defined as a portion of or a complete pipe segment (if a segment consists of one weld then the element and segment are identical. For segments that contain multiple elements, an element will consist of a portion of a straight length of pipe, weld, elbow, fitting, joint, etc., within the segment.

#### 3.6.4.1 ASME Code Case N-560

The number of elements to be volumetrically examined as part of the RI-ISI program is defined in ASME Code Case N-560 as 10 percent of the piping weld population. As discussed in Section 2.3, this sampling criterion is based upon the exceptional performance history of this class of piping. All elements, are to be subjected to pressure/leak testing requirements.

There may be situations where augmented inspection programs are also being conducted for this scope of piping. These exams may be credited toward the 10 percent sampling requirement of N-560 provided the following requirements are met:

- Augmented inspections for locations identified as low or medium risk may not be used to replace or supplant inspections of high risk locations,
- The 10 percent inspection sample shall include a reasonable representation of material conditions (e.g. stainless steel vs carbon steel),
- Each degradation mechanism type existing in high risk locations shall be inspected, and
- Typically no more than one half of the N-560 inspections may be taken from the augmented inspection program,

Guidance on choosing those elements to be subjected to volumetric examination is provided in section 3.6.5.

### 3.6.4.2 ASME Code Case N-578

The number of elements to be examined as part of the RI-ISI program depends on the risk category for the risk-significant segments. The following guidelines are to be used to determine the number of elements to be examined in each risk category for implementation of ASME Code Case N-578 (for definition of the risk categories see Figure 3-4).

- All elements, regardless of risk category, are to be subjected to pressure/leak testing requirements.
- Volumetric examinations for RI-ISI purposes, are not required for those elements determined to be in risk category 6 or 7 (low risk category elements).
- For those elements that are in risk category 1, 3, 5, or 7 and are included in the existing plant FAC (Generic Letter 89-08 [50]) inspection program, the number, location, and the frequency of inspection are to be the same as the existing plant FAC inspection program. The existing FAC program is to remain unchanged, it is not subsumed in the EPRI RI-ISI program.
- For those elements that are in risk Category 1, 2, 3, 5, 6, or 7 and are included in the existing plant IGSCC inspection program (Category B through G - Generic Letter 88-01[36]), the number, location, and the frequency of inspection are to be the same as the existing plant IGSCC inspection program. Only IGSCC Category A welds are subsumed into the EPRI RI-ISI program (see section 2.4).

For elements determined to have degradation mechanisms other than those included in the existing plant FAC and IGSCC inspection programs, the following number of elements are to be volumetrically examined (beyond pressure/leak testing requirements) as part of the RI-ISI program.

- For risk Category 1, 2, or 3, the minimum number of inspection elements in each category should be 25 percent of the total number of elements in each risk category (rounded up to the next higher whole number). Selection of these elements is discussed in the next section.
- For risk Category 4 or 5, the number of inspection elements in each category should be 10 percent of the total number of elements in each risk category (rounded up to the higher whole number). Selection of these elements is discussed in the next section.

When a N-578 application includes Class 1 piping, a check of the final number of inspections should be made. Class 1 inspection populations substantially below 10 percent should be reviewed.

As seen in the full-scale application studies [8,10], Class 1 elements tend to be grouped into three subsets. The first is brought about by the exceptional performance history of Class 1 piping (see section 2.3) coupled with its typical high consequence of failure which results in the large majority of elements being assigned to risk Category 4 (10 percent inspection size). There is a second subset were a 25 percent sample is chosen due to a number of elements identified as potentially susceptible to some degradation mechanism (e.g. risk Category 2, due to thermal fatigue). The third subset consists of those elements assigned to risk Categories 6 or 7, which do not require volumetric NDE. Resulting inspection populations for Class 1 piping were shown to be slightly higher than 10 percent.

If a situation occurs where a very large number of Class 1 piping elements are assigned to low risk categories (i.e. risk Categories 6 or 7) to the point that Class 1 inspections fall substantially below 10 percent of the Class 1 piping population, the basis for the low risk ranking should be investigated. Although Class 1 piping is typically highly reliable (i.e. low failure potential), it is also of significant safety importance (i.e. high consequence of failure). As such, large numbers of low risk elements within the Class 1 pressure boundary should not be expected.

The following provides a comparison between existing Section XI requirements and the RI-ISI criteria.

- ASME Section XI Class 1 piping in risk Categories 4 or 5 (medium risk region), a minimum of 10 percent of the elements will be inspected. This is designed to be equivalent to the recommendations provided by the ASME Section XI Task Group on ISI Optimization. RI-ISI Class 1 piping in the risk Categories 1, 2, or 3 (high risk region) shall continue to be sampled at 25 percent of the elements in each category.
- ASME Section XI Class 2 piping in risk Categories 4 or 5 (medium risk region) or risk Categories 1, 2, or 3 (high risk region) will be subject to increased inspections as the sampling is increased from 7.5 percent to 10 percent or 25 percent, respectively.
- ASME Section XI Class 3 and non-Code piping in risk Categories 4 or 5 (medium risk region) or risk Categories 1, 2, or 3 (high risk region) will be subject to increased inspections as the sampling is increased from 0 percent to 10 percent or 25 percent, respectively.

The above listed percentages are minimum requirements. The utility should review the results of the element assessment evaluation to ensure that they satisfy individual, plant-specific piping integrity objectives. These percentages are used to define an initial set of candidate elements that are subject to revision depending on the results of the risk impact evaluation that is performed as described in Section 3.7.

### 3.6.5 Selection of the Inspection Elements

The selection of individual inspection elements depends on the degradation mechanism present, physical access constraints, radiation exposure, and cost considerations. An inspection-for-cause process shall be implemented at each inspection location. Therefore, examination methods, inspection volumes, and acceptance and evaluation criteria are to be designed specifically for the degradation mechanism(s) active at the inspection location. The EPRI RI-ISI methodology is designed to integrate with the augmented inspection programs such as IGSCC and FAC.

The element selections are performed by multi-disciplinary team. The team typically consists of representatives of the groups that have performed the consequence and degradation analysis, and the following experienced plant personnel:

- ISI coordinator
- ISI supervisor
- Systems engineers responsible for associated systems
- Operations representative

- PSA representative
- Piping/materials engineer with degradation mechanism experience
- Non-destruction examination representative
- Health physics representative
- Individual knowledgeable on scaffolding, insulation, and craft requirements

The multi-disciplinary team begins examination element selection with the highest risk pipe segments of the Risk Matrix, and proceeds to lower segments until sufficient elements are selected to satisfy the criteria specified in section 3.6.4. Each risk ranking category typically includes a number of piping segments, and each segment includes a number of elements. Other considerations that go into the element selection process are inspectability, distribution of inspections among systems and segments, and plant specific inspection results, repairs or remedial measures which have been implemented. The recommendations will also include examination volumes and methodology in accordance with the inspection for cause criteria.

The multi-disciplinary team has two primary objectives. The first is to make sure that all relevant factors have been considered in the consequence assessment, degradation mechanism assessment, and risk ranking processes, and to address any comments resulting from the this review. The second objective is to select elements and examination zones for inspection. To focus the selection on those elements that are most likely to experience inservice problems, input will be sought from the plant representatives on subjects such as previous PSI/ ISI results, repair history, accessibility, etc.

The multi-disciplinary team uses the following guidelines to define the inspection locations The results and decisions of the multi-disciplinary team review shall be documented and maintained.

### 3.6.5.1 ASME Code Case N-560 Applications

As discussed in section 3.6.4, N-560 requires a sample size of 10 percent of the piping population. These locations are to be chosen from the higher risk segments. The following attributes should be considered.

#### *Augmented Inspection Programs*

Locations that are in high risk categories and are included in the existing plant FAC inspection program shall be credited. Care should taken to assure that these locations are indeed inspected as part of the FAC program as opposed to just included within the FAC program scope.

Locations that are in high risk categories, identified as susceptible to IGSCC and are included in the existing plant IGSCC inspection program shall be credited (refer to Section 2.4).

The above exams may be credited toward the 10 percent sampling requirement of N-560 provided the following requirements are met:

- Augmented inspections for locations identified as low or medium risk may not be used to replace or supplant inspections of high risk locations,
- The 10 percent inspection sample shall include a reasonable representation of material conditions (e.g. stainless steel vs carbon steel),
- Each degradation mechanism type existing in high risk locations shall be inspected, and
- Typically no more than one half of the N-560 inspections may be taken from the augmented inspection programs.

### *Non-Augmented Inspection Program Degradation Mechanisms*

The inspections discussed above could capture some of the required 10 percent inspection sample. For the remaining number of locations, including locations discussed above with multiple degradation mechanisms identified as needing to be selected, the following, which is summarized in Table 3-20, shall be considered.

#### Plant Specific Service History

The results of the plant specific service history review are a key input in the element selection process. Prior identification of piping cracks or flaws potentially signifies the presence of an active damage mechanism.

#### Predicted Severity of Postulated Damage Mechanisms

Engineering judgment should be applied to assess the relative severity (e.g., delta temperature or Richardson Number for thermal fatigue) of postulated damage mechanisms. An example of this type of consideration is provided below.

In the ECCS injection lines of PWRs the piping section immediately upstream of the first isolation check valve is considered susceptible to IGSCC assuming a sufficiently high temperature and oxygenated water supply. The piping element (pipe-to-valve weld) located nearest the heat source will be subjected to the highest temperature (conduction heating). As such, this location will generally be selected for examination since it is considered more susceptible than locations further removed from the heat source, even though a pipe-to-valve weld is inherently more difficult to examine and obtain full coverage on than most other configurations (e.g., pipe-to-elbow weld).

#### Configuration / Accessibility of Element to Enable Effective Examination

When possible, elements should be selected such that a complete examination of the required volume can be accomplished. Elements that are physically obstructed (e.g., support pipe clamp) should be avoided as should element configurations that are inherently more difficult to examine unless other considerations take precedence (see example above).

### Radiation Exposure

In general, elements should be selected consistent with ALARA principles (10CFRPart20).

### Stress Concentration

For risk Category 4, element selections should be focused on terminal ends and structural discontinuity locations of high stress and/or high fatigue usage in the absence of any identified damage mechanisms. In these cases, a greater degree of flexibility exists in choosing inspection locations.

### Physical Access to Element

Consideration may be given to selecting elements that are readily accessible (e.g., examination can be performed from floor or grating without scaffolding) without the need for additional plant support.

As stated above, ASME Code Case N-560 requires that a 10 percent sampling size be weighted to the higher risk locations. Provided a segment is defined as a continuous run of piping susceptible to the same degradation mechanism(s) and same consequence of failure, it is not always necessary to inspect every location within a segment in order to capture the risk associated with that segment. In addition, many times there will be runs of piping defined as discrete segments but essentially identical in failure and consequence potential. The following provides an example of how a portion of a segment's locations can be chosen and the remaining inspections allocated to other segments, thereby increasing the portion of risk addressed by N-560.

For example, for a population of 500 welds a sample size of 50 locations is required. In Feedwater systems of BWRs, the horizontal sections connected to the reactor vessel may be subjected to thermal stratification. These piping sections will generally be classified as risk Category 2, assuming a combination of high consequence (large LOCA) and medium failure potential (thermal fatigue). Assuming 4 locations per horizontal sections and 4 feedwater lines, a total of 16 inspection locations exist. Instead of examining all 16 locations, it would be considered more prudent to examine, say six of these locations, and use the other ten inspections (16 minus 6), for other segments and/or degradation mechanisms.

### 3.6.5.2 ASME Code Case N-578 Applications

As discussed in section 3.6.4, N-578 requires a sample size of 25 percent of the high risk region and 10 percent from the medium risk region. The following attributes should be considered.

### *Augmented Inspection Programs*

For elements that are in risk Category 1, 3, 5, or 7 and are included in the existing plant FAC inspection program, the inspection locations in each risk category are to be the same as those identified in the existing plant FAC inspection program.

For elements that are risk Category 1, 2, 3, 5, 6, or 7 identified as susceptible to IGSCC and are included in the existing plant IGSCC inspection program, the inspection locations in each risk category are to be the same as those identified in the existing plant IGSCC inspection program, see also Section 2.4.

Section 3.6.7 provides alternatives for assessing localized corrosion for those licensees wishing to address service water and other raw water systems as part of their RI-ISI application.

### *Non-Augmented Inspection Program Degradation Mechanisms*

For those elements in risk category 1, 2, 3, or 5 determined to have degradation mechanisms other than those included in the existing plant FAC or IGSCC inspection programs or locations with multiple mechanisms, and those elements in risk Category 4, the inspection locations in each risk category are to be determined by considering the following. These considerations are summarized in Table 3-20.

#### Plant Specific Service History

The results of the plant specific service history review are a key input in the element selection process. Prior identification of piping cracks or flaws potentially signifies the presence of an active damage mechanism.

#### Predicted Severity of Postulated Damage Mechanisms

Engineering judgement should be applied to assess the relative severity (e.g., delta temperature or Richardson Number for thermal fatigue) of postulated damage mechanisms. An example of this type of consideration is provided below.

In the ECCS injection lines of PWRs the piping section immediately upstream of the first isolation check valve is considered susceptible to IGSCC assuming a sufficiently high temperature and oxygenated water supply. The piping element (pipe-to-valve weld) located nearest the heat source will be subjected to the highest temperature (conduction heating). As such, this location will generally be selected for examination since it is considered more susceptible than locations further removed from the heat source, even though a pipe-to-valve weld is inherently more difficult to examine and obtain full coverage on than most other configurations (e.g., pipe-to-elbow weld).

Configuration / Accessibility of Element to Enable Effective Examination

When possible, elements should be selected such that a complete examination of the required volume can be accomplished. Elements that are physically obstructed (e.g., support pipe clamp) should be avoided as should element configurations that are inherently more difficult to examine unless other considerations take precedence (see example above).

Radiation Exposure

In general, elements should be selected consistent with ALARA principles (10CFRPart20).

Stress Concentration

For risk Category 4, element selections should be focused on terminal ends and structural discontinuity locations of high stress and/or high fatigue usage in the absence of any identified damage mechanisms. In these cases, a greater degree of flexibility exists in choosing inspection locations.

Physical Access to Element

Consideration may be given to selecting elements that are readily accessible (e.g., examination can be performed from floor or grating without scaffolding) without the need for additional plant support.

**Table 3-20**
**Element Selection Process Considerations**

| Factors Considered in Element Selection Process | Selection Plus | Selection Negative |
|---|---|---|
| Plant Service History | Poor | Good |
| Severity of Damage Mechanisms | High | Low |
| Element Configuration / Accessibility | Good | Poor |
| Radiation Exposure | Low | High |
| Stress Concentration | High | Low |
| Physical Access | Readily | Difficult |

### *3.6.6 Examination Schedule*

#### 3.6.6.1 RI-ISI Inspection Frequency

The EPRI RI-ISI methodology approach to the frequency of inspections is the 10-year inspection interval required by the current Section XI program supplemented with augmented inspections for specific degradation mechanisms provide an acceptable level of quality and safety.

Many years of operating experience have indicated in relative terms, which of the mechanisms listed in Section 3.4 have aggressive initiation and growth rates. The inspection schedules for mechanisms such as IGSCC (BWRs) and FAC are based on the NRC's mandated inspections or plants' own inspection programs. For mechanisms with slow growth rates where operating experience has shown that there is no need for augmented inspections, the Section XI inspection interval has been used successfully in the past and will still be used to manage these mechanisms.

The service history and susceptibility review and ongoing industry events reviews assure that the industry trends are being monitored to assure that if an unexpected or new mechanism is identified, or a new component is identified as susceptible to an existing degradation mechanism, the RI-ISI program will be updated to reflect that change. The program update will incorporate any additional inspections mandated by the NRC, as well as those inspections deemed appropriate by the industry groups addressing the specific issues.

### 3.6.6.2 RI-ISI Selected Examinations

The sequence of piping examinations established during the first inspection interval using the risk-informed process can be repeated during each successive inspection interval. For RI-ISI programs that commence during the inspection interval (e.g. beginning of the second period), examinations shall be allocated in accordance IWB-2400.

If piping structural elements are accepted for continued service by analytical evaluation in accordance with ASME Section XI, paragraph IWB-3600, the areas containing the flaws or relevant conditions shall be reexamined during the next three inspection periods.

If the reexaminations reveal that the flaws or relevant conditions remain essentially unchanged for three successive inspection periods, the piping examination schedule may revert to the original schedule for successive inspections.

Since the risk-informed inspection program may require examinations on elements constructed to lesser pre-service inspection requirements, the program in all cases will determine through an engineering evaluation the root cause of any unacceptable flaw or relevant condition found during examination. The evaluation will include the applicable service conditions and degradation mechanisms to establish that the element(s) will still perform their intended safety function during subsequent operation. Elements not meeting this requirement will be repaired or replaced.

The evaluation will include whether other elements on the segment or segments are subject to the same root cause and degradation mechanism. Additional examinations will be performed on these elements up to a number equivalent to the number of elements required to be inspected on the segment or segments initially. If unacceptable flaws or relevant conditions are again found similar to the initial problem, the remaining elements identified as susceptible will be examined. No additional examinations will be performed if there are no additional elements identified as being susceptible to the same service related root cause conditions or degradation mechanism.

#### 3.6.6.3 Existing Successive Examination

The successive examination requirements of IWB-2400 (Class 1) or IWC-2400 (Class 2) must be fully met for any existing element that has been accepted for continued service based on an analytical evaluation per IWB-3600, regardless of whether the subject element is a RI-ISI selection.

### *3.6.7 Alternate Element Selection Criteria – Localized Corrosion*

In lieu of the sampling percentages found in Section 3.6.4.2, alternative criteria may be used for addressing localized corrosion. The following paragraphs identify several of the alternatives available to licensees. These alternatives include the use of existing effective programs (Section 3.6.7.1), enhancements to existing programs, or the development of replacement inspection programs (Section 3.6.7.2).

#### 3.6.7.1 Use of Existing Plant Programs

All Licensees should have service water reliability programs based upon plant specific requirements, service experience and in response to reference [56]. Table 3-21 may be used to assess the effectiveness of an existing program. If, after assessing its program against Table 3-21, a licensee decides to enhance its program, then relevant portions of section 3.6.7.2 may be used.

#### 3.6.7.2 Use of the Pilot Study Process

Figure 3-5 provides a flowchart of the process that is described below. This approach was developed during one of the EPRI RI-ISI pilot studies.

*Applicability*

This approach may be used by those licensees wishing to revise their current service water and raw water reliability programs. This alternative approach to element selection may be implemented when the top level, "binary" evaluation of all potentially active degradation mechanisms, indicates that:

- The potential exists for localized corrosion (i.e., microbiologically influenced corrosion (MIC) and pitting) or other forms of degradation where the degradation usually does not occur in discrete areas such as welds. This is typical for carbon steel systems. In stainless steel systems, MIC is most often found at welds, although the degradation is not always confined to welds. Similarly, the most likely locations for crevice corrosion in either stainless steel or carbon steel systems will be at crevices.
- The system(s) being evaluated are very large such that inspection of "10 percent or 25 percent of the susceptible locations" would create an unnecessary burden because the degradation can occur anywhere over a large area.

- The variety of system operating conditions are such that various combinations of flow, temperature, water chemistry, water treatment(s), etc. can either contribute to or mitigate degradation.

For example, MIC and other forms of localized corrosion are often the most damaging degradation mechanisms in systems such as the service water system (SWS).

The objective of this alternative approach to element selection is to identify specific locations within the system which are most susceptible to degradation based upon system design and operation. Specific areas to be inspected can then be selected based upon accessibility, planned maintenance nearby, etc. The number of elements selected for examination should be sufficient to provide a high level of confidence that if a degradation mechanism is operative, it will be detected by the inspection program.

Throughout this discussion, examples from the analysis done for the ANO-2 service water system (SWS), one of the pilot projects for the EPRI Risk-Informed ISI methodology [9], will be used to illustrate the process. The analysis performed at ANO-2 is intended to illustrate a specific example, it should not be construed that future analysis must be performed as it was performed at ANO-2.

### *Degradation Mechanisms*

The localized corrosion phenomena generally produce leakage only and do not jeopardize the system's structural integrity in any other way. The leakage may degrade system function or may produce a threat to other systems that are nearby. The existence of such localized phenomena signals an unacceptable condition that must be addressed.

Pitting is a form of localized attack that occurs in the bulk aqueous environment. A local region of active metal begins corroding, a pit is initiated, and a highly localized electrolytic cell is formed which has an anodic area that is then effectively isolated from the bulk environment. The pit continues to grow, often at a high rate, into and through the metal, since the corrosion process within the pit, at the isolated or occluded anodic area, produces conditions that are far more aggressive than conditions in the bulk environment.

The major difference between pitting and other forms of localized corrosion (such as crevice corrosion, underdeposit corrosion, and MIC) is that pitting initiates on boldly exposed surfaces and generates its own occluded anodic cell. Crevice corrosion, underdeposit corrosion, and MIC require an initiating condition, such as a crevice or microbiological deposit, before the isolated anodic area is created. For pitting, localized attack may occur under virtually all flow conditions. However, conditions such as crevices or microbilogical deposits that serve to isolate the corroding area from the bulk environment are often associated with periods of stagnation or low flows. Pitting of carbon steel, especially under tubercles or other deposits, can also be exacerbated by highly oxidizing conditions in the bulk fluid.

MIC is the interaction of microbiological life processes and the electrochemical reactions that produce corrosion. MIC can produce localized corrosion, with local metal loss rates that are tens or even hundreds of times what is normally experienced in the same environment without a microbiological influence. Unlike other forms of localized corrosion which will be limited to at

least some extent by the availability of aggressive chemical species such as chloride, microbes are mobile, can produce extremely high concentration factors for aggressive species, and can become active participants in the corrosion process.

Appropriate conditions exist in systems such as the service water system to make these forms of localized attack operative for both carbon steel and stainless steel. Localized corrosion of carbon steels is likely to occur over relatively large areas (e.g., the size of a quarter or larger) with a large aspect ratio (ratio of length over depth greater than 4).

Pitting, crevice corrosion, or underdeposit corrosion in stainless steel will be much more localized. Pits in stainless steel generally have a very small cross-section, but propagate, often very rapidly, in the through-wall direction. Low flow or stagnant lines will be most susceptible. Similarly, flanged connections and welds, especially those made with backing rings or which contain defects such as a lack of fusion, produce geometric conditions that are conducive to crevice corrosion or underdeposit attack.

Essentially all structural materials, with the possible exception of titanium, are susceptible to MIC. However, the locations where MIC typically occurs and the manifestations of the attack will be different for carbon steels and stainless steels. In carbon steels, pitting resulting from MIC is about as likely to occur in mid-spans of piping as at welds. Localized attack is most often beneath large tubercles, producing pits approximately the same size as the tubercles that grow with an approximately hemispherical shape. In stainless steels, MIC occurs most often found at weldments and may attack weld metal, the heat affected zone, or at the weld heat tint. Pits in stainless steel are much more closed, with tiny entrance and exit holes but large subsurface areas of metal removal.

### *Technical Approach*

The first step in the implementation of the alternative approach is the construction of a "finer screen" than that used for the binary determination of all the potentially operative degradation mechanisms. The top level, binary degradation analysis performed per section 3.4, evaluates the susceptibility to all potentially active degradation mechanisms. It does not determine the probable degree of susceptibility. This finer screen approach permits the focusing of the examination on those portions of the system or sub-systems where degradation is most likely. In this approach, the degradation mechanisms that could potentially affect the subject system(s) are evaluated to determine the level of susceptibility, thus, providing a ranking of susceptibility of the piping elements in the system.

Design and fabrication, temperature, flow, water chemistry, and water treatment variations throughout the system will influence localized corrosion. As a result, the finer screen analysis requires a determination of the geometry (which influences local flow and deposition patterns), operating history (e.g., the flow patterns for various sub-systems), any prior failure or repair history, seasonal variations in temperature and water chemistry, and variations of the concentrations of water treatment chemicals around the system. Further, results from prior examinations or monitoring should also be factored into the selection process so that the system history becomes a key input in the determination of degradation susceptibility. By selecting locations that are most likely to be degraded, then performing a reasonable number of examinations at those areas, information can be obtained that should bound the entire system.

The number of elements selected for examinations should provide a high level of confidence regarding system degradation.

Consistent with the differences in the morphology and the location of attack for carbon steel and stainless steel, the approach to element selection and inspection will be slightly different.

### *Implementation*

The initial step in the construction of the finer screen approach involves a detailed review of all the P&IDs and isometric drawings and documents describing typical operation of all of the affected subsystems. Often the review of that material on flows, temperatures, water chemistry, and water treatment, will reveal that the system has operated under several clearly different control regimens (e.g., untreated or a long period of stagnation while filled with untreated hydrotest water; treated aggressively with oxidizing biocides; treated more thoroughly with corrosion inhibitors and dispersant but with less aggressive concentrations of biocide).

Table 3-22 is an example of the type of information included in the review for the ANO-2 SWS.

The inputs should be processed to determine the relative susceptibility to the potentially operative forms of degradation in each system and for specific elements within systems. This analysis should consider all of the parameters that influence the operative degradation mechanisms under review and provide a ranking of the degree of susceptibility for different subsystems and for different locations within a system. These parameters include the material of construction, temperature, flow, water chemistry, and water treatment. Analysis needs to be performed for each subsystem for each of the time periods where different water chemistry control regimens were used. Accuracy and reproducibility of the predicted susceptibility are critical.

Table 3-23 illustrates inputs and results for a specific subsystem of the ANO-2 SWS that show the level of detail required to perform the analysis. Where values for key parameters are unknown, conservative but reasonable estimates should be assumed. The actual value used in the analysis should be compared to system operating conditions to assure that the value that was used is reasonable.

In most analyses, water chemistry parameters and concentrations of water treatment chemicals used will be nominal values for the entire system. In most plants, additions of water treatment chemicals are generally made at or near the intake of the pumps and the concentrations of the chemical additions will decay as a function of time or distance from the injection point. Where measured data for biocide or other residuals exist, they will most often be made at the discharge of the system or at a convenient point within the system. Measurements of the actual concentrations of critical chemical species around the system are typically not performed. For example, oxidizing biocides, such as chlorine, hypochlorite, or bromine/hypochlorite mixtures, will be consumed in the system, often very rapidly. As a result, the biocide concentration in some portions of the system, such as, areas a great distance from the injection point or from the position where the residual values are measured, may be less than the target value. Oxidizing species also decay over time. Systems that have a biocide residual during periods when those systems experience flow, will have a lower residual after the system has been stagnant for some time. The element selection process should consider inclusion of some elements that are selected

specifically to determine if consumption of water treatment chemicals through the system produced areas with more degradation than would be predicted from the nominal water treatment.

Conversely, areas very close to the biocide injection point may experience degradation that is greater, possibly much greater, than what would be predicted from nominal biocide concentrations. Since these chemicals can exacerbate general and localized corrosion, several areas, such as the SWS supply headers, where biocide concentrations are likely to have been highest, should be considered for inclusion in the inspection program to assure that the treatments themselves had not produced degradation.

The subsystems which show the most severe corrosion degradation in the analysis will be the primary focus for the element selection since the condition of those systems should bound the condition of all areas of the system under consideration. The majority of candidate locations selected for inspection should be from the most susceptible systems.

In many cases, the differences in predicted degradation susceptibility among systems or subsystems may not be significant. Often, the only available input data for those predictions are based upon the nominal conditions, which will not vary much from subsystem to subsystem. As a result, the analysis will show that the same materials of construction will be exposed to the same system-wide temperature, flow history, and nominal water chemistry and conclude that the differences in MIC and corrosion susceptibility are minimal or non-existent. If differences between subsystems are not significant, further analysis of specific spools or elements (or specific welds with stainless steel systems) within those systems will be required to define the geometry, flow, etc. These characteristics may make the elements more susceptible.

Selection of specific predicted worst case locations within a system may be based upon a change in flow (e.g., the upstream or downstream end of a reducer or tee), at the bottom of a long vertical run where deposition would be expected to be a maximum, immediately downstream of a heat exchanger (higher $\Delta T$; greater microbiological activity), or at locations of extremes in the concentrations of water treatment chemicals or oxygen.

For example, high chlorine concentrations can accelerate damage beneath deposits. Such conditions may have existed in the ANO-2 SWS in areas near the chlorine injection point (e.g., supply headers), especially during the time periods when a relatively high chlorine residual (0.8 total residual oxidant, TRO) was measured at the closed cooling water heat exchangers or at the system discharge. Other areas, such as any of the normally stagnant legs or in the return headers, have probably experienced lower-than-nominal concentrations of water treatment chemicals and less protection against MIC or localized corrosion.

The specific locations selected for examination should emphasize areas of worst case degradation but also include some typical areas of degradation for the system.

Once the preliminary element selection, based solely on susceptibility to degradation has been done, a final element selection should be performed. This final element selection should include 1) a sampling of any high consequence elements, and 2) the substitution of medium or higher consequence elements for low consequence elements of the same or similar susceptibility to degradation.

### *Validation*

Comparing the analysis results for the different subsystems against the system's actual failure history, in order to benchmark the predictions, is a key operation in the establishment of the finer screen analysis. The majority of the failures or areas where degradation has been detected by prior examinations should be in good agreement with the rankings from the analysis.

For example, results for the ANO-2 carbon steel and stainless steel SWS piping for the supply headers, containment cooling coils, emergency diesel generators, shutdown cooling, emergency feedwater, fuel pool cooling, and service water to the closed cooling water heat exchangers were included in the analysis. Not surprisingly, the degradation for each subsystem was predicted to be fairly similar since the materials, and system wide temperature, flow history, water chemistry, and water treatments are essentially the same. The areas with the predicted worst degradation were:

| | |
|---|---|
| Prior to commercial operation to 1981: (No water treatment) | Shutdown cooling<br>Supply headers<br>Containment cooling<br>Fuel Pool cooling |
| 1981 to 1990: (Treatment with a fairly high level (0.8 ppm) of gaseous chlorine) | Shutdown cooling<br>Fuel Pool cooling<br>Supply headers<br>Containment cooling |
| 1990 to 1992: (Treatment with 0.5 ppm sodium hypochlorite and sodium bromide biocide) | Supply headers<br>Shutdown cooling<br>Fuel Pool cooling |
| After 1992: (Treatment with 0.3 ppm hypochlorite plus sodium bromide (biocide), zinc plus orthophosphate corrosion inhibitor, and a polymer for deposit control) | susceptibility of all systems was predicted to be much less than for the prior three time periods. A relative ranking of susceptibility for this period showed that shutdown cooling, emergency diesels, supply headers, and fuel pool cooling were the most susceptible. |

Reported failures or degradation detected include:

- Containment cooling (1989; localized corrosion)
- Emergency diesels-return line (1989 and 1995; localized corrosion)
- Supply header expansion joint (1990; localized corrosion)
- Shutdown cooling supply header (1991; localized corrosion)
- EFW pump suction (1996 and 1997; localized corrosion)
- Spent fuel pool heat exchanger piping (2 in 1997; localized corrosion).

These results are consistent with the above analysis predictions, therefore, they validate the analysis.

### *Examination*

The selected locations and the number of locations to be inspected should be such that the identified degradation mechanisms will be detected with a high level of confidence. The quality of the information to be gained by those examinations will be affected by accessibility limitations (e.g., much of the piping may be buried and can be examined on the ID by remote methods only) and by the available techniques (e.g., ultrasonic, radiographic, visual). Locations to be inspected must be selected carefully to optimize the examination results.

For carbon steel, an examination volume of one foot of pipe length over 270° of arc that includes the bottom 60° of the pipe is recommended when ultrasonic thickness measurements are employed as the primary means of examination. It is also recommended that the examination volume be fully scanned in lieu of the utilization of a grid pattern approach. Complete interrogation of the examination volume will increase the probability of detecting corrosion degradation if present.

For stainless steels, where closed pits at welds are most likely, radiography is the inspection method of choice. Double-wall radiography of the entire circumference of the entire weldment is recommended.

As an example, the most common potentially operative degradation mechanism in the ANO-2 SWS was localized corrosion. In this case ultrasonic thickness (UT) measurements were recommended as the primary examination technique employed for examination of piping. Where access to the inside of piping or a component is simple (e.g., at a threaded connection or in a component that is scheduled to be opened for maintenance) visual examination may also be utilized. In most cases, visual examination will only be performed in the event that the UT thickness examination reveals severe degradation that must be further analyzed by visual examination and detailed NDE or destructive methods.

The inspection program should attempt to define typical and worst case areas in the system. The areas selected will provide a statistically significant number of locations and locations that are likely to experience worst case conditions for localized corrosion (including pitting, crevice corrosion, and MIC).

### *Element Selection*

Locations expected to be typical of the worst degradation should be selected. For example, regions of highest oxygen (or other oxidizing species such as oxidizing biocides) and high flow may have the most aggressive pitting. Low flow areas will be most susceptible to underdeposit corrosion and MIC. Stagnant and intermittent flow areas may be particularly susceptible to MIC.

Section changes, where fluid velocity can increase or decrease rapidly, or geometry's where fluid changes direction abruptly are the areas most likely to experience erosion due to "scouring" by particulates under flow. These areas are also susceptible to underdeposit corrosion or MIC where particulates and microbes settle under low flows or during periods of stagnation. Accessibility must also be considered in the examination recommendations.

Since UT thickness measurements can be performed rapidly, with minimal disruption to system operations, their use was emphasized in the element selection for the carbon steel piping of the ANO-2 SWS. Wall thickness determinations by UT will be used to evaluate the existing condition of the pipe relative to the minimum wall thickness and to define areas of localized attack.

Characterization of deposition and tuberculation can be performed using radiographic testing (RT) at locations that would be expected to demonstrate worst case deposition. RT has also been shown to be a powerful tool in evaluating local thinning of carbon steels and other alloys where MIC or erosion effects are operative. Radiographic methods may also be used in areas where such effects might be suspected to be a concern. RT is the recommended technique for evaluating MIC and other localized corrosion in stainless steel welds.

Since access to most areas inside the SWS is limited, visual methods will be used only where access is simple (available access ports and manholes, instrument taps that are being accessed for maintenance, threaded connections, etc.) or where other techniques reveal that degradation is severe.

### *Examination Results*

#### Initial Screening Criteria

The initial screening criteria consists of values for the design nominal wall thickness ($t_{nom}$) and the design minimum wall thickness ($t_{min}$). Minimum wall thickness is determined using ASME Section III, Class 3 criteria, ND-3641.1 equation (3). Design minimum wall thickness will consider both the average measured wall thickness and wall thickness at the deepest pit. If the average wall thickness exceeds 87.5 percent of $t_{nom}$ or the pit does not violate $t_{min}$, then the pipe is acceptable as-found.

If the initial screening criterion is exceeded, the examination results will be evaluated. In cases where the thinning is not severe, the stresses may be further recalculated in accordance with ASME Code rules using the actual pipe wall thickness (plus allowance for further corrosion). If degradation is significant, the criteria of Generic Letter 90-05, "*Guidance for Performing Temporary Non-Code Repair of ASME Code Class 1, 2, and 3 Piping*" [59] will be applied. Based on the flaw evaluation approach selected per Generic Letter 90-05, the degraded pipe will be shown to have the required structural integrity or appropriate corrective actions will be taken.

### Initial Examination

The initial examination will have two objectives:

1. Determine whether localized corrosion is present in any of the locations examined, and

2. Define a baseline thickness value and an estimate of average corrosion rate.

For carbon steels, localized corrosion will be considered operative at a location if the average wall thickness is less than 87.5 percent of $t_{nom}$ or any valid measurement is less than $t_{min}$. For stainless steels, MIC or other localized corrosion at the inspected welds will be considered operative if localized metal loss is detected by RT.

If localized corrosion is greater than the examination criteria, the sample will be expanded by five locations per Generic Letter 90-05. The additional locations selected will take into consideration the opposite train counterpart pipe locations along with pipe locations having similar operating conditions such as flow characteristics and pipe sizes. Results of that expanded sample will be compared to the same criteria to determine whether the population as a whole is affected by localized corrosion.

If localized corrosion is not detected, it will be concluded that localized corrosion was not operative or problematic from either recent or prior operation.

### Subsequent Examinations

Subsequent examinations will expand upon the results of the initial examination to provide a further determination of the presence of active localized corrosion and to determine approximate rates of propagation of general and localized corrosion.

Similar to the initial examination, localized corrosion in carbon steel will be considered operative at a location if the average wall thickness is less than 87.5 percent of $t_{nom}$ or any valid measurement is less than $t_{min}$. Active localized corrosion will be defined by those pipe inspection location areas that fail the examination criteria during the current examination that were not similarly identified during the prior examination. In addition to the examination criteria, general pipe wall degradation will be evaluated for localized pipe wall thinning that is greater than 5 mils per year.

For stainless steels, the total length of pitting indications will be compared to the total length of pits from prior examinations. Active localized corrosion will be defined for piping locations that exhibit pit growth.

If active localized corrosion is greater than the examination criteria, the sample will be expanded by five locations per Generic Letter 90-05 as discussed above. Results of that expanded sample will be compared to the same criteria to determine whether the population as a whole is substantially affected by localized corrosion. In assessing the identified degradation, water chemistry and other control processes will be evaluated for their effectiveness. Examinations of the affected areas will be repeated during the subsequent examination period.

If active localized corrosion is determined to be less severe than the examination criteria, it will be concluded that localized corrosion was not operative or problematic from either recent or prior operation. The sample size for future examinations may be decreased, including elimination of "typical" areas and up to 50 percent of other locations that were selected as probable worst case locations. Control procedures will be monitored to assure that good practice continues.

### *Evaluation Results*

Examples of specific locations to be inspected within each subsystem at ANO-2 are listed in Table 3-24. Those specific locations should provide typical areas of degradation for the system or worst case degradation. In most cases, examination of one or more one foot lengths in a spool piece or a specific fitting is identified for examination. As noted previously, selection of those specific locations was based upon a change in flow (e.g., the upstream or downstream end of a reducer or tee), at the bottom of a long vertical run where deposition would be expected to be a maximum, immediately downstream of a heat exchanger (higher $\Delta T$; greater microbiological activity), or at locations of extremes in chlorine concentration. Other areas, such as any of the normally stagnant legs or in the return headers, have probably experienced lower-than-nominal concentrations of water treatment chemicals and less protection against MIC or localized corrosion.

For the ANO-2 SWS, a total of sixty-three (63) locations were identified for UT thickness examinations. Assuming that localized corrosion is not detected in any of the examinations will provide a characterization that is applicable to 95 percent of the system with 95 percent confidence.

**Table 3-21**
**Checklist for Assessment of Existing Programs for Risk-Informed Inspection of Systems Susceptible to Localized Corrosion**

| | |
|---|---|
| | Assessments for Degradation |
| ☐ | Localized corrosion (or other degradation mechanism) identified |
| ☐ | Degradation typically does not occur in discrete areas |
| ☐ | Leakage only; structural integrity is not jeopardized |
| | Analysis of Design |
| ☐ | Analysis was performed for the entire system considering: |
| ☐ | System layout (P&IDs, isometrics) |
| ☐ | Materials of construction |
| ☐ | Weld joint details |
| ☐ | Flow changes due to changes in section |
| ☐ | Operation History |
| ☐ | Consideration of Normal Operation and Operability Demonstrations |
| ☐ | Temperature |
| ☐ | Flow |
| ☐ | Water Chemistry |
| ☐ | Water Treatment |
| ☐ | Condition Assessment History |
| ☐ | Failures |
| ☐ | Repairs |
| ☐ | Examination results |
| | |
| ☐ | Influences of design and operation parameters on operative degradation mechanisms are documented |
| ☐ | All inputs and assumptions for input values used in the analysis are documented |
| ☐ | Analysis results are documented |
| ☐ | Selected elements include most susceptible locations from analysis and service history |
| ☐ | Program includes one or more typical locations or locations selected randomly |
| ☐ | Internal validation performed (predictions compare favorably to failure, repair, examination history) |
| ☐ | Number of elements inspected assures high confidence |
| ☐ | Consequence/Safety Impact Assessment |
| ☐ | Highest susceptibility elements |
| ☐ | Sampling of any high consequence/safety impact of failure elements |
| ☐ | Examination methods will accurately detect localized corrosion at a high level of confidence |
| ☐ | Acceptance criteria applied identify the presence of localized corrosion in the system from an examination of the sample |
| ☐ | Sample expansion criteria are consistent with Generic Letter 90-05 |
| ☐ | Conclusions on system condition can be made from the sample examination with a high level of confidence |

**Table 3-22**
**Example Design Description**

| Component Tag # | Component Description | Design | | Operating | | Pipe Size | | Pipe Size | | Flow | | Fluid Velocity | |
|---|---|---|---|---|---|---|---|---|---|---|---|---|---|
| | | Press (psig) | Temp (°F) | Press (psig) | Temp (°F) | Min. (NPT) | Max. (NPT) | Min. ID | Max. ID | Normal (gpm) | Test (gpm) | Normal (fps) | Test (fps) |
| 2HBC-32 | Service Water Pump Discharge - Lines From Three Separate Pumps | 152 | 120 | 110 | 72 | | | | | | | | |
| 2HBC-33 | Service Water Supply Header #1 | 150 | 120 | 110 | 72 | 18 | 20 | 16.876 | 18.812 | 2500 | 4000 | 3.58 | 4.61 |
| 2HBC-34 | Service Water Supply Header #2 | 145 | 120 | 110 | 72 | 18 | 20 | 16.876 | 18.812 | 2500 | 4000 | 3.58 | 4.61 |
| 2HBC-35 | Service Water Supply Header #1 to Shutdown Cooling HX 2E-35A | 150 | 120 | 76 | 72 | 14 | 16 | 13.124 | 15 | | 4761 | 0.00 | 8.62 |
| 2HBC-43 | Service Water Supply Header #2 to Shutdown Cooling HX 2E-35B | 150 | 120 | 70 | 72 | 14 | 16 | 13.124 | 15 | | 5585 | 0.00 | 10.11 |
| 2HBC-50 | Service Water Return Header #1 | 150 | 180 | 67 | 82 | | | | | | | | |
| 2HBC-51 | Service Water Return Header #2 | 150 | 180 | 67 | 82 | | | | | | | | |
| 2HBC-59 | SW Return from Shutdown Cooling HX 2E-35A to Header #1 | 150 | 175 | 67 | 82 | 14 | 16 | 13.124 | 15 | | 4761 | 0.00 | 8.62 |
| 2HBC-60 | SW Return from Shutdown Cooling HX 2E-35B to Header #2 | 150 | 175 | 65 | 82 | 14 | 16 | 13.124 | 15 | | 5585 | 0.00 | 10.11 |
| 2HBC-63 | SW to Emerg. Diesel Gen. Jacket Coolant Water HX 2E-20A | 150 | 120 | 72 | 72 | 8 | | 7.981 | | | 968 | 0.00 | 6.19 |

## Table 3-23
## Example Evaluation Criteria for Alternate Element Selection

| | | | | |
|---|---|---|---|---|
| Date Plant Began Operation: | 3-26-80 | | | |
| System/Segment | Supply Headers (Note 1) | | | |
| Period Evaluated | 1976-81 | 1981-90 | 1990-92 | 1992-96 |
| Date System Began Operation: | 3/26/80 | 3/26/80 | 3/26/80 | 3/26/80 |
| Date First Wet Out: | 7/76 | 1/1/81 | 1/1/90 | 1/1/92 |
| **System Base Material** | | | | |
| Material-C-steel, S-Steel | CS | CS | CS | CS |
| Product Form: Pipe, Plate, Forging | Pipe | Pipe | Pipe | Pipe |
| Material Treatment Applied: | None | None | None | None |
| **Operational Information:** | | | | |
| Average Temperature °F | 72 | 72 | 72 | 72 |
| Maximum Inlet Temperature °F: | Default | Default | Default | Default |
| Minimum Inlet Temperature °F: | Default | Default | Default | Default |
| Average ΔT °F | 0 | 0 | 0 | 0 |
| Maximum ΔT °F | 0 | 0 | 0 | 0 |
| Average Flow (ft/sec) | Default | Default | Default | Default |
| Minimum Non Zero Flow (ft/sec): | Default | Default | Default | Default |
| Normal System Operating Pressure: | 110 | 110 | 110 | 110 |
| Normal Stagnation Period (weeks): | Default | Default | Default | Default |
| Longest Stagnation Period (weeks): | 13 | 13 | 13 | 13 |
| # Stagnation Periods/year | Default | Default | Default | Default |
| Normal Restart flow (ft/sec) | Default | Default | Default | Default |
| Total Time at Min Flow (weeks/yr.) | Default | Default | Default | Default |
| **Water Source:** | | | | |
| River, Lake, Pond | Lake | Lake | Lake | Lake |
| **Water Treatment:** | | | | |
| Biocide | None | Chlorine | NaOCl+NaBr | NaOCl+NaBr |
| Ppm | | 0.8 | 0.5 | 0.3 |
| freq. | | Cont's | | |
| Biodispersant | | | | |
| Ppm | | | | |
| freq. | | | | |
| Inhibitor | | | | Zinc + O'PO4 |
| Ppm | | | | 1 |
| freq. | | | | |
| Deposit Control | | | | Polymer |
| Ppm | | | | |
| freq. | | | | |
| **Water Chemistry** | | | | |
| Conductivity (µS/cm) | 500 | 500 | 500 | 500 |
| Tot. Dissolved Solids, TDS (ppm) | Default | Default | Default | Default |
| PH | 7.5 | 7.5 | 7.5 | 7.5 |
| Turbidity (NTU) | Default | Default | Default | Default |
| Total Hardness ppm | Default | Default | Default | Default |
| Total Alkalinity ppm | 75 | 75 | 75 | 75 |
| Total Solids ppm | 150 | 150 | 150 | 150 |
| Sulfate ppm | 50 | 50 | 50 | 50 |
| Chloride ppm | 100 | 100 | 100 | 100 |
| Sulfide ppm | Default | Default | Default | Default |
| Oxygen ppm | Default | Default | Default | Default |
| Iron ppm | 1 | 1 | 1 | 1 |
| Manganese ppm | Default | Default | Default | Default |
| **RESULTS** | | | Note 2 | |
| MIC | 7.1 | 5 | 4.5 | 4.7 |
| General/Pitting Corrosion | 7.1 | 8.6 | 8.6 | 4.8 |
| **(for Stainless Steel):** | Note 3 | | | |
| MIC | 6.8 | 4.8 | 4.3 | 4.6 |
| General/Pitting Corrosion | 2.8 | 3.5 | 3.5 | 1.9 |

NOTES:

1. Includes 2 HBC-32, -33, -34 and 2 HCC-33 & -34
2. MIC Index = 4.8 & Corrosion Index = 7.8 for 0.3 ppm TRO
3. MIC Index = 4.6 & Corrosion Index = 3.1 for 0.3 ppm TRO

**Table 3-24**
**Example Element Selection for Alternate Element Selection Criteria**

| | Isometric Drawing No. Description | Risk Segment ID Inspection Location | Risk Class | Pipe Size | Exam Method / Volume Reason for Selection | Notes |
|---|---|---|---|---|---|---|
| 1 | 2HBC-32-1 Sh. 1 2P-4A Discharge | SWS-R-01A Spool 2 | Medium | 20" | UT / One foot x 270° arc that includes bottom 60° Typical Section of Supply Header | |
| 2 | 2HBC-32-1 Sh. 1 2P-4B Discharge | SWS-R-01C Spool 4 | Medium | 20" | UT / One foot x 270° arc that includes bottom 60° Typical Section of Supply Header | |
| 3R | 2HBC-32-1, Sh. 1 Pump Discharge in Supply Header #2 | SWS-R-02A Spool 3 | Medium | 20" | UT / One foot x 270° arc that includes bottom 60° Typical Section of Supply Header #2 | Supply Header #2 vs. Supply Header #1 |
| 4 | 2HBC-33-3 Sh. 1 Supply Header #1 | SWS-R-01A Spool 1 | Medium | 20" | UT / One foot x 270° arc that includes bottom 60° Typical Section of Supply Header | |
| 5 | 2HBC-33-80 Sh. 1 Supply Header #1 | SWS-R-04A Underground Section | Medium | 20" | UT / One foot x 270° arc that includes bottom 60° Typical Section of Supply Header | |
| 6 | 2HBC-33-1 Sh. 1 Supply Header #1 | SWS-R-05A Spools 1 thru 3 (one required) | Medium | 20" | UT / One foot x 270° arc that includes bottom 60° Typical Section of Supply Header | |
| 7 (A, B) | 2HBC-33-1 Sh. 1 Supply Header #1 | SWS-R-06A Spool 4 / 5 – Elbow (Item 5) **(2 locations)** | Medium | 20" | UT / One foot x 270° arc that includes bottom 60° Supply Header - Probable worst case deposition area | |
| 8R | 2HBC-43-1, Sh. 1 SDC Supply from Header #2 | SWS-R-06B Spools 1-2 | High | 16" | UT / One foot x 270° arc that includes bottom 60° Typical Section of Supply Header | ***Note: 16" vs. 20"*** |

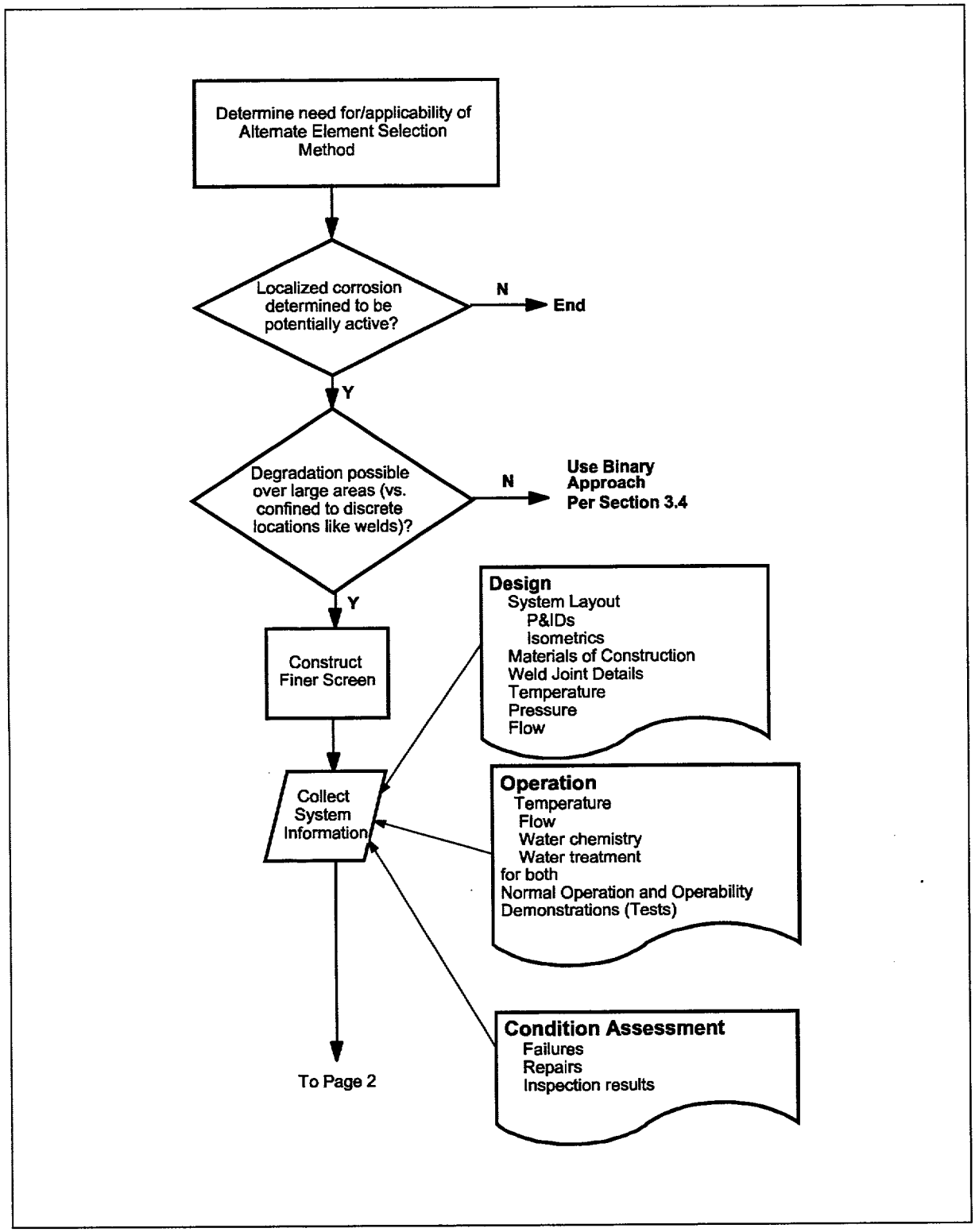


**Figure 3-5**
**Alternate Element Selection Criteria Flowchart**

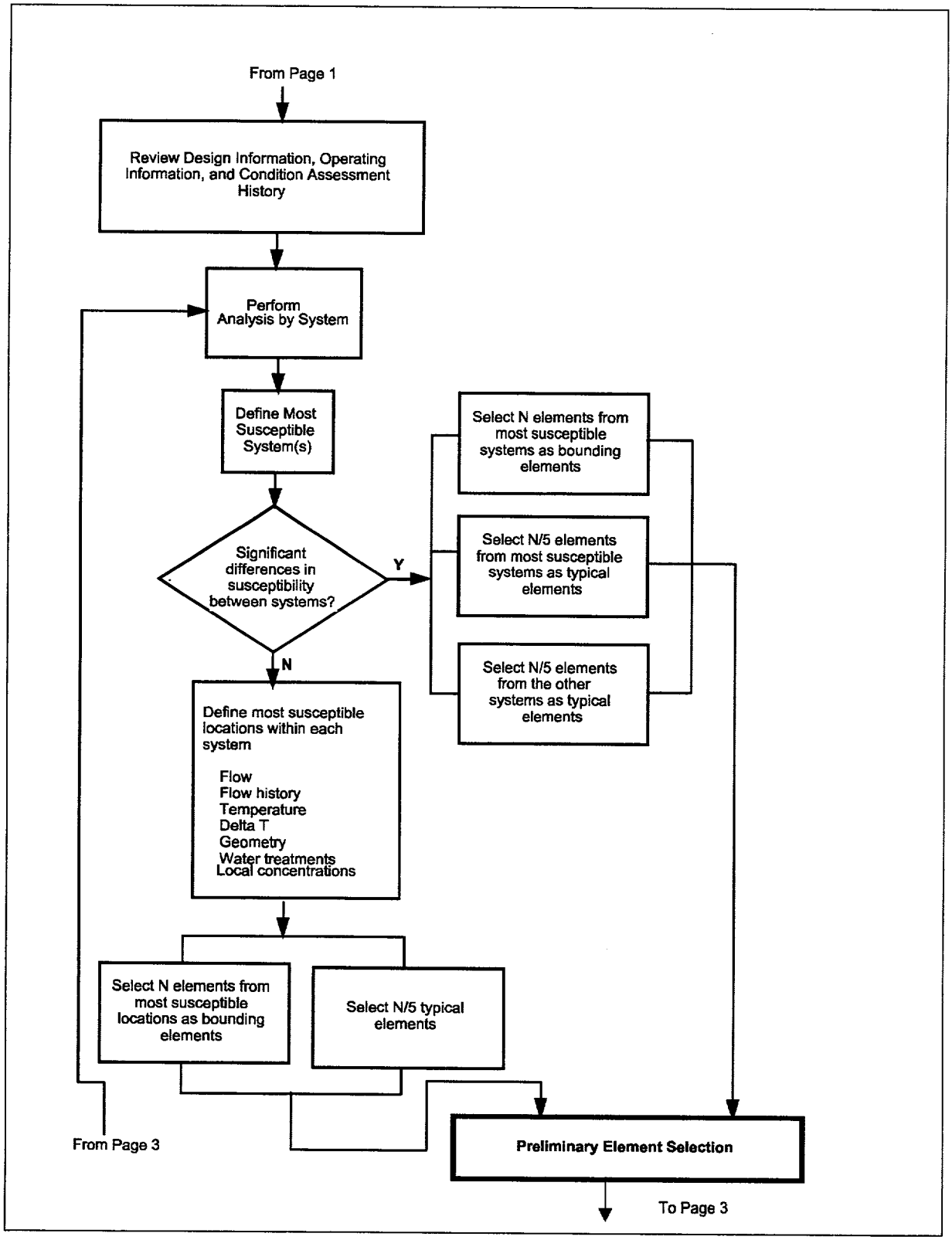


**Figure 3-5**
**Alternate Element Selection Criteria Flowchart (continued)**

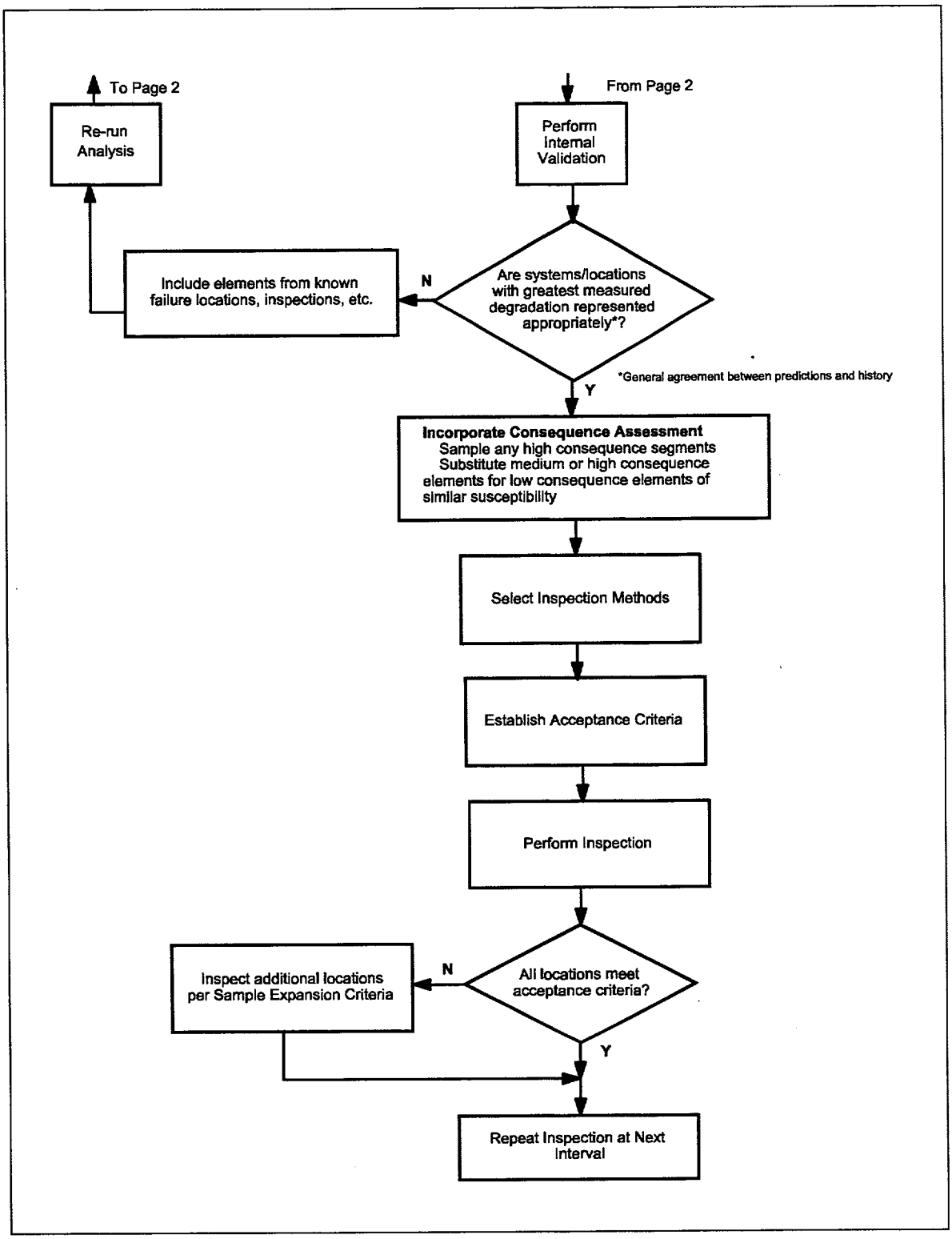


**Figure 3-5**
**Alternate Element Selection Criteria Flowchart (continued)**

## 3.7 Risk Impact Assessment

From the process described in Section 3.6, a specific set of locations will be selected for examination. This can be compared against the set of locations that were inspected prior to the implementation of RI-ISI. In addition, the implementation of an inspection for cause approach described in Section 3.6, will result in physical differences in the way in which individual locations are inspected such that the characteristics of the applicable degradation mechanisms are taken into account.

In general, the process of assigning pipe segments to the risk matrix and the process of selecting the number and locations of inspections in each risk category, will be expected to result in a net reduction in risk as would be indicated by potential changes in core damage frequency (CDF) or large early release frequency (LERF). For segments in the high risk categories that have their inspection priority increased or unchanged due to RI-ISI, there should be a reduction in both leak and rupture frequencies associated with degradation mechanisms, since the flaws that could be identified during inspection could lead to the preemption of both a leak or rupture associated with that flaw. While it is conceivable that some segments that are no longer inspected due to rearranging the priorities in a risk informed process could have a finite probability of increased leakage, the risks impact of such leakage would be negligible. However, to ensure that this is the case, a final risk comparison is performed to ensure that the changes to the inspection program result in either a reduction in risk or at most negligible increases in risk. In the vast majority of cases, this assessment can be accomplished via a simple qualitative assessment. However, there may be cases in which a quantitative assessment can be performed to verify that the impact of changes to the inspection program are either negligible increases in CDF and LERF, or result in actual decreases in these risk measures.

### *3.7.1 Qualitative Evaluation of Risk Impact*

Qualitative evaluation of risk impacts of changes to the inspection program first requires that the changes to the inspection program be delineated. This can be accomplished by listing for each system, all segments and locations in each risk category. Then, for each risk category, it can be established whether the number of locations in the inspection program increased or decreased.

The qualitative evaluation is guided by the following rules:

- For segments classified as low risk (EPRI risk matrix Categories 6 and 7), any changes in inspection locations will have negligible risk impacts. This is true for Category 7 pipe segments whose total rupture is found to have no consequences, i.e., no impact on CDF or LERF. This is true for Category 6, and the remainder of Category 7, for the following reasons. As indicated in Figure 3-2, Category 6 includes segments with either medium rupture potential and low consequences (i.e., conditional CCDP less than 1E-6), or low rupture potential and medium consequences (i.e., conditional CCDP less than 1E-4), while the remainder of Category 7 includes low rupture potential and low consequences.

  EPRI service data indicates that welds susceptible to damage mechanisms in the medium rupture potential category would have rupture failure rates less than 1E-5 per weld-year (EPRI TR-111880[24]), and those not found susceptible to any known damage mechanisms would be in the low rupture potential category of less than 1E-6 per weld-year. (The service

data in EPRI TR-111880, also indicates that welds susceptible to damage mechanisms in the high rupture potential category would have rupture failures rates less than 1E-4 per weld year.) A comprehensive set of piping system failure rates and rupture frequencies were developed in EPRI TR-111880[24] for use in EPRI RI-ISI applications as discussed more fully in Section 2.2. This analysis enabled the estimation of conditional pipe rupture frequencies for each of the damage mechanisms covered in the high, medium, and low rupture potential categories in the EPRI risk matrix in combination with the reactor vendor, system category and pipe size. For damage mechanisms other than FAC that are represented in the medium rupture potential, all the calculated conditional rupture frequencies given susceptibility to the damage mechanism were less than 1E-5 per weld year. To characterize upper bound rupture frequencies in the low rupture potential categories where there is no susceptibility for any known damage mechanism, we use the conditional rupture frequencies due to design and construction errors. Using this approach the highest conditional rupture frequencies for design and construction errors were less than 1E-6 per weld year. In setting these upper bound conditional rupture frequencies, we limit our consideration to failure mechanisms that could be prevented by in-service inspection. These boundary rupture frequencies are consistent with the total plant rupture potential of 1E-2 discussed in Section 3.3.2.

To establish conservative bounding estimates in the following (for use in bounding risk analysis), the upper bound rupture frequencies for the medium and low failure potential categories are set at 1E-5 per weld-year and 1E-6 per weld-year, respectively, based on the discussion in the previous paragraph. These rupture frequencies reflect no credit for inspections. Hence, upper bound estimates of the risk impact of welds in category 6 and 7 are as follows:

Category 6: Medium rupture potential and low consequence
CDF Impact < (1E-5 per weld-year) X (1E-6) = 1E-11 per year

Category 6: Low rupture potential and medium consequence
CDF Impact < (1E-6 per weld-year) X (1E-4) = 1-10 per year

Category 7: Low rupture potential and low consequences
CDF Impact < (1E-6 per weld year) X (1E-6) = 1E-12 per year

Hence, any weld inspection location that is removed from the inspection program in a low risk region would have a negligible upper bound risk impact. Even with a higher number of locations removed from the program, these core damage frequencies are on the order of, or lower than, the cut set screening values typically used in PSAs. It should be noted that the actual risk impact of removing inspection locations would actually be less than the above bounding estimates for several reasons. These include the fact that actual weld failure rates are less than those indicated above, actual conditional CDF estimates are less than the above upper bounds, and importantly, even if the welds are retained in the inspection program, their failure rates will not be eliminated due to the limited role that inspections play in determining the piping system failure rate. Nonetheless, even at the above bounding levels, such changes in CDF would constitute a negligible change in risk.

- Some of the existing weld inspection locations are satisfied with external surface examinations. A comprehensive review of service experience indicates that surface exams are not effective for most of the experienced pipe failure and rupture mechanisms. Hence, elimination of surface exams would have negligible risk impact even if located on an element classified as high or medium risk.
- The qualitative risk evaluation should carefully review changes in weld locations selected for any high or medium risk category. If each high risk or medium risk category has an increased number of locations selected for inspection, or if it has a comparable number of locations that are redirected to locations that are more likely to identify failure precursors based on the characteristics of the identified damage mechanisms, the risk impacts associated with implementing RI-ISI are a net risk reduction or, at worst, risk neutral. Keeping the number of locations fixed, in number and location, increasing the locations, or changing the locations to areas more likely to find precursors, would have at most positive safety impacts.
- If there are significant reductions in the number of locations selected for any high or medium risk category that are not offset by quantitative or qualitative enhancements to the proposed RI-ISI program that would clearly offset the risk impacts of these reductions, then further quantitative evaluation is required to establish risk impact acceptability as described in the next section.

### 3.7.2 Quantitative Evaluation of Risk Impact

When quantitative evaluations of risk impacts are needed, any approach that meets the requirements of RG 1.178 and RG 1.174 and that can provide defensible realistic or bounding estimates can be used for this purpose.

The effect of implementing a risk informed inservice inspection program is to alter the number and effectiveness of locations that are inspected in relation to the existing ASME Section XI based program. Hence there are two strategies, the Section XI based program and the RI-ISI program. The impact of the strategies on a specific location could include adding that location to the inspection program, removing it, or changing the effectiveness of the program. In the EPRI RI-ISI program, when the element is selected for inspections the effectiveness of the inspection is expected to increase because of the knowledge gained from the RI-ISI evaluation to determine which damage mechanisms are most likely to be present at that location. Hence when the strategy is switched from Section XI to RI-ISI, there are three possibilities for each location to change its rupture frequency:

- If the location was inspected in Section XI and retained in RI-ISI, the change in the pipe rupture frequency, if any, would be to reduce the pipe rupture frequency.
- If the location was not inspected in Section XI and added to the RI-ISI program, as frequently occurs in Medium or High Risk segments, the pipe rupture frequency will decrease.
- If the location was inspected in Section XI and not retained in the RI-ISI program, there may be increases in pipe rupture frequency.

When it is necessary to consider a quantitative evaluation to show that risk impacts are acceptable, the decision criteria presented in Figure 3-6 could be used to evaluate impacts of the proposed risk informed inspection strategy. The EPRI methodology characteristics make this application most efficient if applied on a system-by-system basis, or, in other words, by a group of piping segments having a reasonably similar set of conditions for damage mechanisms and range of consequences. This is why it is proposed to apply risk acceptance decision criteria on a system-by-system basis. Each system is evaluated based on the diagram, presented in Figure 3-6, by considering the potential impact of change in the inservice inspection program on the CDF and LERF, respectively.

The evaluation starts by considering qualitative criteria, discussed in the previous section: the risk impacts are acceptable, unless there is a reduction in locations to be inspected in high and medium risk categories. Using this approach, the need for any quantitative analysis is limited to specific medium or high risk categories in which a reduction in the number of inspections has been proposed.

The next step is to perform a bounding risk estimate for all system locations in the high and medium risk categories, using the category bounding values for CCDPs and rupture frequencies, as presented in the previous section. Those bounding values for high, medium and low rupture potentials correspond to the rupture frequencies of 1E-4, 1E-5 and 1E-6 per weld year, respectively. High, medium, and low consequence categories correspond to CCDPs of 1, 1E-4, and 1E-6 per reactor year, respectively. The CCDP for the high consequence category can be chosen as plant-specific, and determined from the consequence evaluation as the highest evaluated CCDP. The decision criteria that is used is to ensure that the cumulative change in CDF and LERF is less than 1E-7 per year per system and 1E-8 per year per system, respectively. (If a Class 1 only evaluation is being performed per N560, then for the purpose of the risk impact assessment only, the Class 1 piping may be treated as a single system.) Those values are selected so that a potential screening of multiple systems would not impact the results, and that the requirements of RG 1.178 and RG 1.174 will still be met.

If the criteria is not met in the bounding risk analysis, a more realistic quantitative analysis should be performed. The numerical criteria are the same as in the bounding analysis, Those numerical criteria are based on the assumption that a full plant level RI-ISI program should strive to ensure that the cumulative risk impact for the full plant are maintained at levels less than 1E-6 per year for CDF and 1E-7 per year for LERF.

In the EPRI RI-ISI pilot studies and supporting research project, two approaches have been used and successfully applied, one based on a simple approach with reasonable assumptions, and another more detailed approach that requires more data to apply. Both of these approaches are based on a model of how an inspection program may influence the frequency of pipe ruptures at a given location. This model is expressed in terms of the following equation:

$$F_{Aj} = F_{0j} I_{Aj} \qquad \textbf{Eq. 3-8}$$

Where:

$F_{Aj}$ = Frequency of pipe rupture at location j subject to inspection strategy A

$F_{0j}$ = Frequency of pipe rupture at location j subject to no inspection

$I_{Aj}$ = Inspection effectiveness factor, factor reduction in pipe rupture frequency at location j due to implementation of inspection strategy A. The effectiveness factor can range from 1.0 to 0.0. An effective inspection would have an effectiveness factor close to 0, while an ineffective inspection will have an effectiveness factor close to 1.

The change in the risk of core damage at location j that is impacted by the changes in the RI-ISI program, can be estimated as:

$$\Delta CDF_j = (F_{rj} - F_{ej}) * CDF_j = (I_{rj} - I_{ej}) * F_{0j} * CCDP_j \qquad \textbf{Eq. 3-9}$$

Where the subscripts "rj" refer to the risk informed inspection at location j, and the subscripts "ej" refer to the existing inspection program at location j. As defined above, $F_{oj}$ is the frequency of pipe rupture at location j, if no inspection is performed. The term $CCDP_j$ is the conditional core damage probability from a pipe rupture at location j, which is independent of the inspection strategy. These CCDP values can be bounded by using the upper bound of the consequence range, e.g., medium consequence locations would be assigned a value of $10^{-4}$, or estimated from the plant specific PSA. If one substitutes $CLERP_j$ representing the conditional probability of a large early release for $CCDP_j$ in the above Equation (3-9), the change in large early release frequency due to inspection program changes can be determined.

Quantification of Equation (3-9) requires the capability to predict the impact that inspections make on pipe rupture frequency, as well as the baseline rupture frequency without crediting inspections. This is indeed a difficult task for several reasons. First, the pipe could fail due to failure mechanisms that are not amenable to inspections such as vibration fatigue, water hammer, over-pressurization etc. Second, each time the pipe is inspected, there may or may not be a flaw available to detect. If there is a flaw of significant magnitude it may or may not be detected. If there is a flaw and it is detected and the damage repaired, the pipe could still rupture between successive inspections. Furthermore, if there is a flaw and it is not detected, it may or may not propagate through wall, and even if it does, it may leak and not rupture. Fortunately, it is not necessary to obtain a rigorously accurate estimate of pipe rupture frequency to show that there are no significant adverse risk impacts from implementing the RI-ISI program.

## Simplified Risk Quantification Method

In the Vermont Yankee and ANO-2 pilot applications [14, 9], a simplified method was used to quantify delta risk (Equation 3-9) in response to NRC questions from their review of the submittal [15,26]. In this approach, the inspection effectiveness factor was estimated assuming that the probability of pipe rupture is proportional to three factors: (1) probability that a flaw exists, (2) probability that the flaw is not detected, and (3) probability that, if not detected, the flaw will propagate into rupture. It is also assumed that factors (1) and (3) are not functions of the previous inspections. In this case, the inspection effectiveness factor is equal to the probability that the flaw is not detected, or to the complement of the NDE probability of detection (*POD*). In other words,

$$I_{rj} = (1 - POD_{rj}) \quad \text{and} \quad I_{ej} = (1 - POD_{ej})$$ **Eq. 3-10**

The major simplifying assumptions in this method are that probability of the existence of the flaw is independent of the previous inspections and that detection of the flaw will prevent ruptures. The method, based on those assumptions, is easy to apply and enables the consideration of adding and removing inspection locations, and that of improvements to the inspection by considering the damage mechanisms most likely to occur. This method was used to demonstrate that there were no adverse risk impacts from implementing the RI-ISI program according to ASME Code Cases N-560 and N-578.

## Markov Risk Quantification Method

An alternative method was developed by EPRI in a supporting research program which attempts to make a more realistic model of the interactions between damage mechanisms, inspections, and the conditions that may produce a pipe rupture as reported in EPRI TR-110161 [23]. These piping reliability models use a Markov modeling technique to model the interactions between degradation mechanisms, pipe inspection, and leak detection processes that cause and mitigate pipe cracks, leaks, and ruptures. The models support the calculation of time dependent probabilities of various pipe states such as the normal state, presence of detectable flaw, presence of detectable leak, and rupture. The model's primary output is a time dependent hazard rate which measures the time dependent growth in pipe rupture frequencies due to degradation mechanisms. The Markov model explicitly models the role of the inspection and leak detection programs in reducing the likelihood of pipe ruptures. There is an explicit model of whether each element is selected for inspection, the probability of detection, the time between inspections, leak detection probabilities and time intervals, and each failure mechanism that is supported by the database that was developed for use with the models.

The supporting piping failures database in EPRI TR-111880 [24] includes failure rates for pipe failures and ruptures which has been specialized to different reactor vendors, system groups, and failure mechanisms. This database can be used with either of the two risk impact evaluation procedures discussed above. A Bayesian analysis has been performed to support a quantification of the uncertainties in pipe failure rates, rupture frequencies, and changes in CDF and LERF due to the changes in the inspection program. Application of the EPRI Markov Model and the supporting database is explained more fully in references [23,24].

## Adjustment to Element Selection

If a plant conducts the qualitative and quantitative evaluation and can not readily show that the requirements of Regulatory Guide 1.174 are met, there is an option available to the utility to add additional inspection locations. These locations should be added on a system by system basis consistent with the results of the delta risk comparison discussed above. These additional location(s) should be chosen so that additional risk is captured over the previous group of locations. Thus, locations should be chosen from segments that were not selected for inspection or degradation mechanisms that were not selected. The above alternative for additional selections can be used prior to conducting either of the quantitative options previously discussed, if deemed appropriate by the utility.

Since the element adjustment process is typically adding element locations, a review by the multi-disciplinary team is typically not required. However, if large or significant changes to the element selection list are made, the multi-disciplinary team should be consulted.

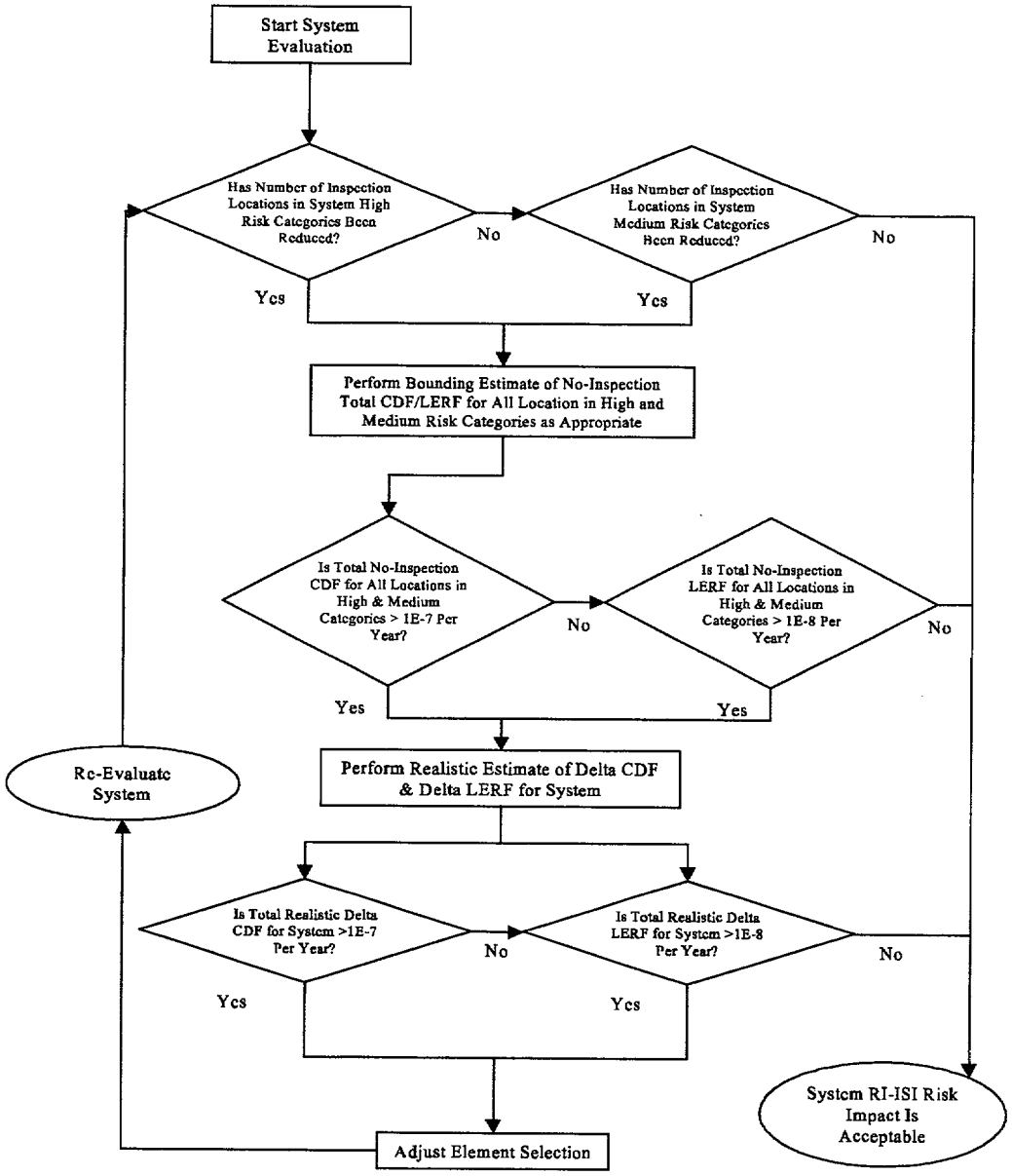


**Figure 3-6**
**Decision Criteria for Evaluating RI-ISI Impacts on CDF and LERF**

# 4
# MECHANISM SPECIFIC EXAMINATION VOLUMES AND METHODS

Application of RI-ISI uses NDE techniques that are designed to be effective for specific degradation mechanisms and examination locations. This inspection for cause approach involves identification of specific damage mechanisms that are likely to be operative, the location where they may be operative, and appropriate examination methods and volumes specific to address the damage mechanism. This approach provides assurance that risk significant locations selected or examination will be examined using effective methods.

Appendix VIII to ASME Section XI provides requirements for demonstrating the effectiveness of ultrasonic examination procedures and personnel for Section XI examinations. The scope of Appendix VIII does not include all damage mechanisms and locations relevant to RI-ISI such as FAC, MIC, and thermal fatigue in augmented inspection programs—examination for these damage mechanisms is specifically addressed in the RI-ISI process. Appendix VIII has been implemented by the industry through the performance demonstration initiative (PDI) program administered by EPRI. The NRC, however, has not yet issued rulemaking to accept Appendix VIII into 10CFR50.55a and is therefore not required as part of implementation of a risk-informed ISI program. Irrespective of Appendix VIII implementation, Licensees maintains their responsibility to ensure that qualified examination methods are applied in every case.

## 4.1 Thermal Fatigue

### *Affected Regions*

Regions identified by TASCS or transient screening (see Section 3.4).

### *Examination Volumes*

Volumes surrounding stress concentrations (e.g., counterbores, nozzle corners) and other high-stress regions (e.g., terminal ends). If there are no stress concentrations or high-stress regions, the application volume is volume around welds. Examination should focus on detection of cracks initiating and propagating from the inner surface.

### *Examination Volume Figures*

See Figures 4-1, 4-2, 4-3, and 4-4. These volumes may need to be expanded, depending on the nature and extent of TASCS-type mechanisms.

**Table 4-1**
**Summary of Degradation-Specific Inspection Requirements and Examination Methods[1]**

| Degradation Mechanism | Degradation Mechanism Subcategory | Examination Requirement Figure No. | Examination Method[2] | Acceptance Standard | Evaluation Standard |
|---|---|---|---|---|---|
| Thermal fatigue | | 4-1<br>4-2<br>4-3<br>4-4 | Volumetric | IWB-3514 | IWB-3640<br>or<br>IWB-3650 |
| Corrosion cracking | Chloride cracking (OD) | Affected Surface | Surface | IWB-3514 | IWB-3640<br>or<br>IWB-3650 |
| | Chloride cracking (ID) | 4-5 | Volumetric | IWB-3514 | |
| | Crevice corrosion | 4-6<br>4-7 | Volumetric | IWB-3514 | |
| PWSCC | | | Visual (VT-2) | IWB-3142 | IWB-3640 |
| | | 4-8<br>4-9 | Volumetric | IWB-3514 | |
| IGSCC | | 4-10<br>through<br>4-14 | Volumetric | IWB-3514 | IWB-3640 |
| MIC | | 4-15 | Volumetric<br>or | IWB-5250(b) | Code Case N-480 |
| | | | Visual, VT3 | IWB-5250(b) | N-480 with volume equivalent thickness |
| Erosion-cavitation | | See FAC | Volumetric | Same as FAC | Same as FAC |
| Flow-accelerated corrosion | | 4-16<br>through<br>4-22 | Volumetric | Plant program | Plant program |

1. The frequency of inspection for each degradation category is each inspection interval, except for the existing plant inspection programs for IGSCC and FAC, where the frequencies specified in the plant programs are applicable.

2. Volumetric examinations are generally performed using ultrasonics, unless otherwise indicated.

### Examination Methods

Volumetric. The following considerations are suggested for the examination of thermal fatigue cracks:

In contrast to mechanical fatigue, thermal fatigue cracking usually initiates as many small cracks and then one of the cracks becomes predominant. It has been most commonly observed at or near the pipe-to-nozzle weld where the wall thickness is thinner due to a counterbore or previous grinding on the inside surface. In feedwater piping, that predominant crack grows straight out in a radial-circumferential plane while the others remain small. The predominant crack tends to be located at the thinnest area and does not follow the weld fusion line.

- Examinations should be conducted from both sides of the weld even if additional surface preparation is necessary, unless prohibited by physical limitations in which case alternatives will have to be addressed on a case-by-case basis.
- Scan at least 12 decibels (dB) over the standard ASME Code Section XI, Appendix III, gain.
- Obtain an accurate wall thickness profile.
- Look for excess inside-surface signals that are typical of thermal fatigue cracking, especially in thinner, more susceptible areas.
- The tip signal should always be lower in amplitude as compared to the corner trap signal.
- When sizing, consider the length of the indication; surface-connected cracks are almost always at least twice as long as they are deep, often 5 to 10 times as long.
- Determine whether the suspected tip signal actually plots to be exactly above the corner trap signal. For this purpose, a special reference block, with multiple parallel notches and holes above the notches, can be a useful training, reference, and qualification tool. It might be difficult to separate the signals manually, but a properly set up automated scan should be able to correctly identify the location of the signals.

Focused transducers or the time-of-flight-diffraction (TOFD) technique are recommended for sizing and/or characterization. TOFD works especially well for finding the deepest crack in a group of cracks.

### Acceptance Standard

Section XI, IWB 3514.

### Evaluation Standard (as applicable)

Section XI, IWB - 3640 or IWB - 3650, as applicable.

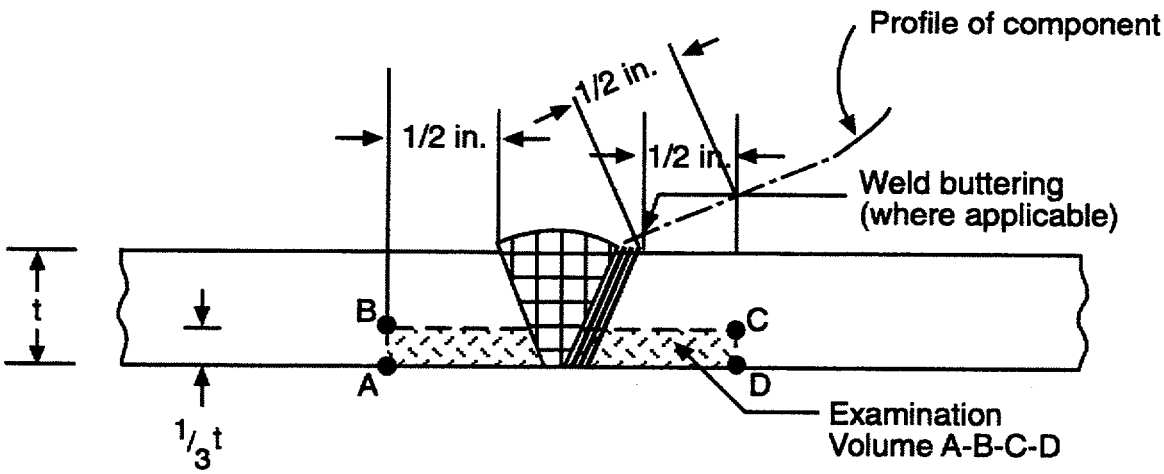


**Figure 4-1**
**Examination Volume for Thermal Fatigue Cracking in Piping Welds Less Than NPS 4**

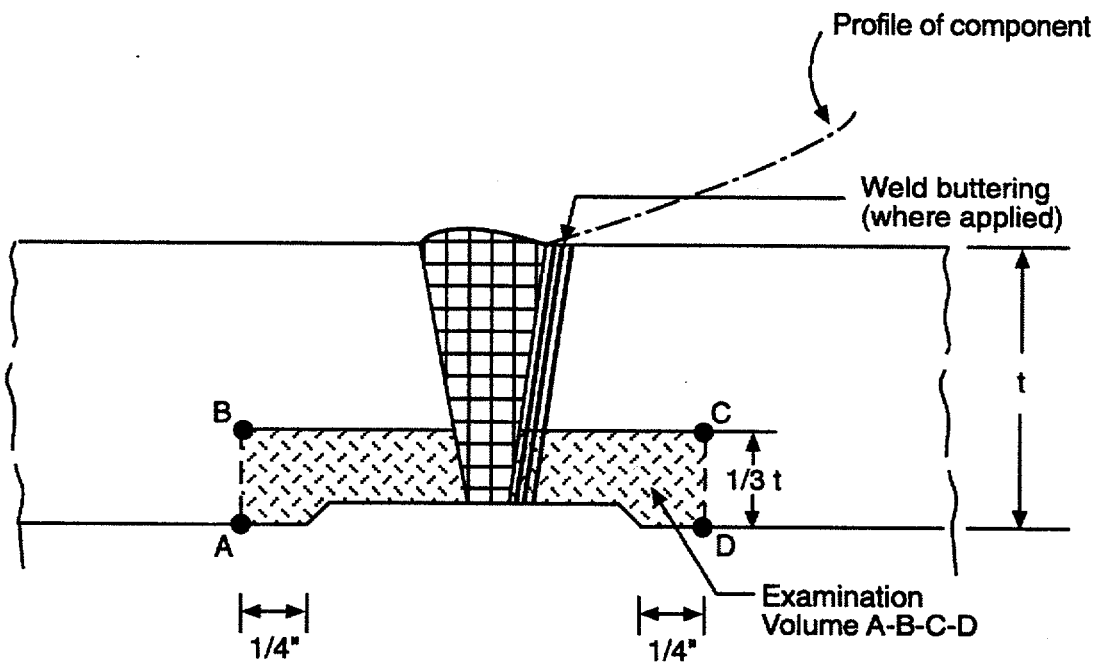


**Figure 4-2**
**Examination Volume for Thermal Fatigue Cracking in Piping Welds NPS 4 or Larger**

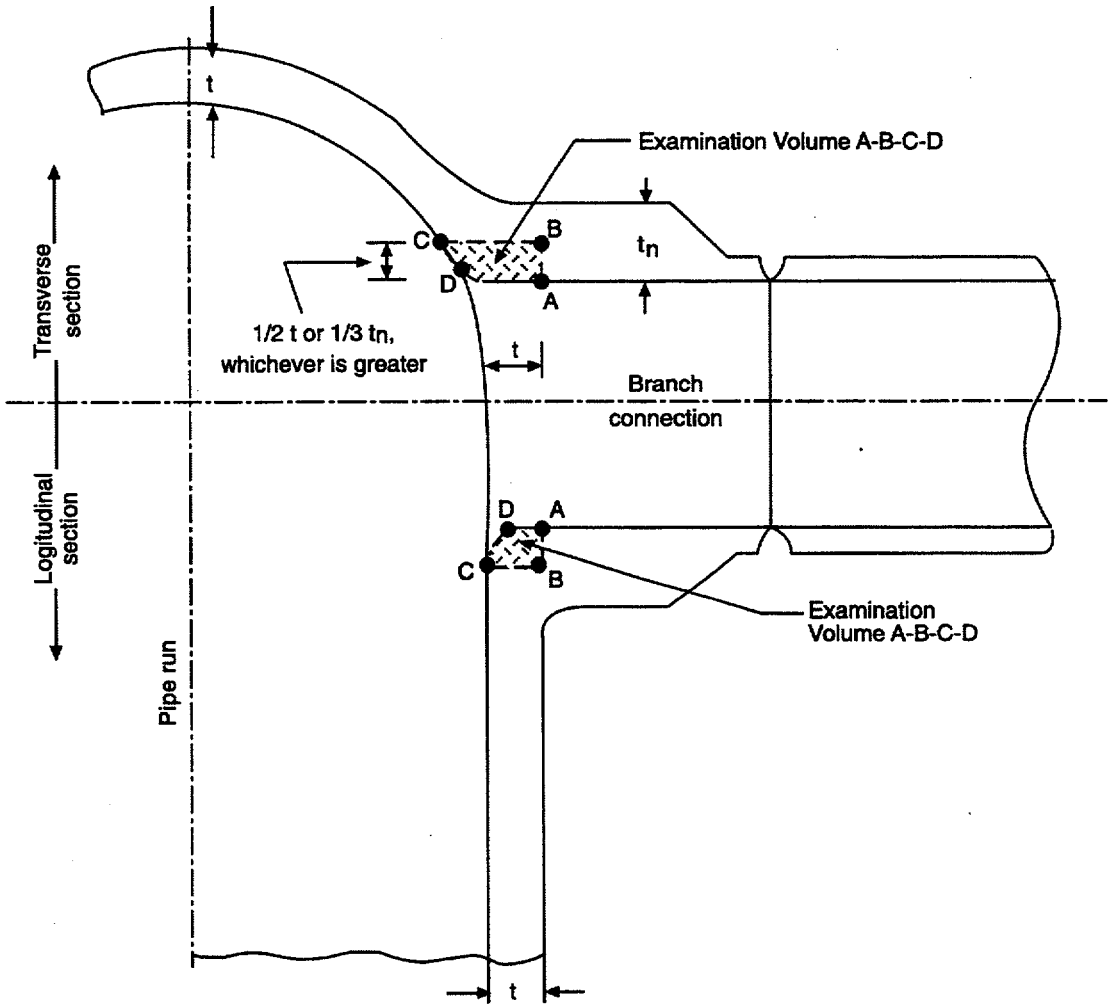


**Figure 4-3**
**Examination Volume for Thermal Fatigue Cracking in Sweepolets**

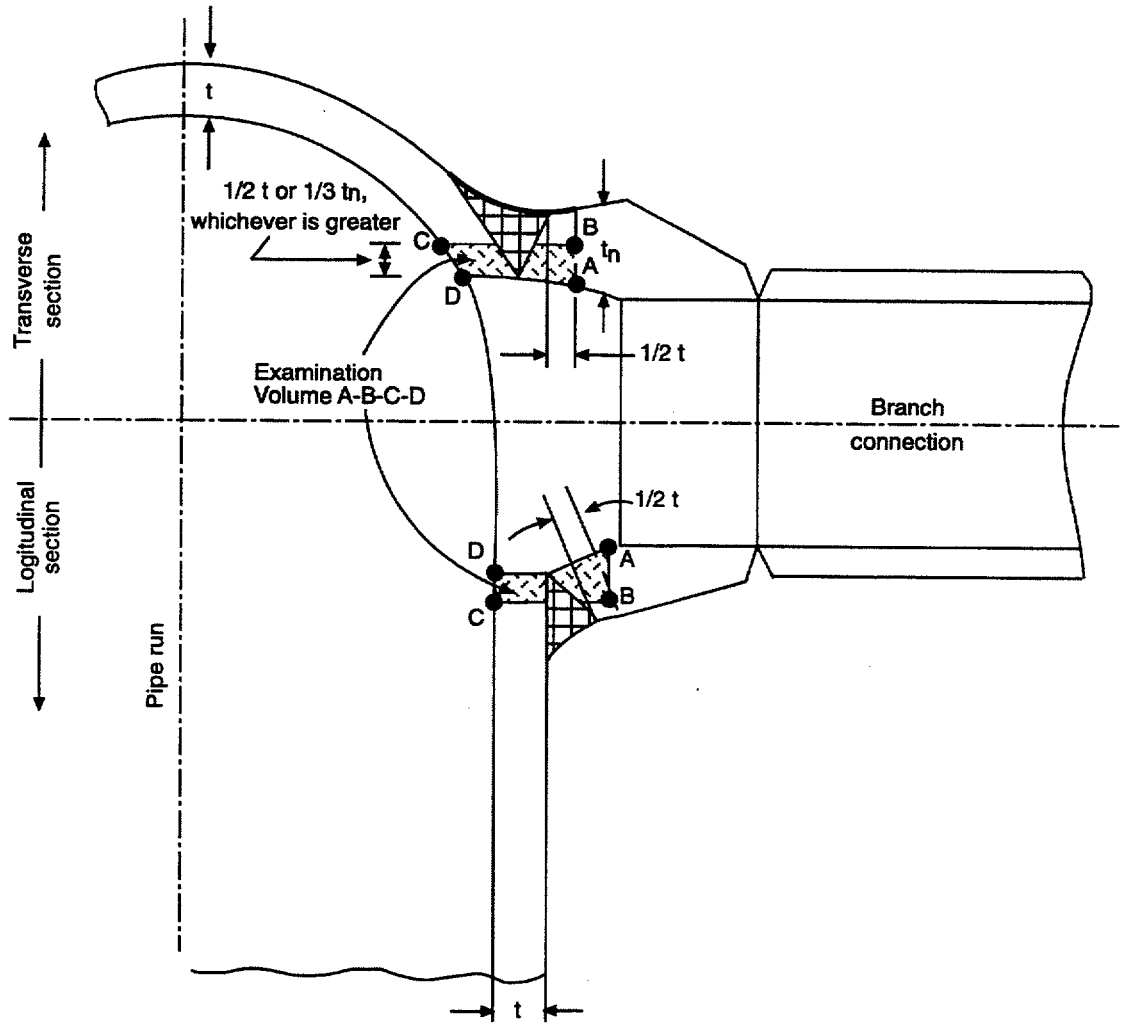


**Figure 4-4**
**Examination Volume for Thermal Fatigue Cracking in Weldolets and Sockolets**

## 4.2 Corrosion Cracking

### *4.2.1 Chloride Corrosion Cracking*

#### Affected Region

Austenitic steel piping and welds exposed to chloride contamination (from insulation, brackish water, or concentration of fluids containing chlorides), temperatures greater than 150°F, and tensile stresses.

## Examination Volumes

Welds and weld heat-affected zones.

## Examination Volume Figures

See Figure 4-5.

## Examination Method

- Surface for cracking that might initiate at the pipe outside surface
- Volumetric for cracking that might initiate at the pipe inside surface

## Acceptance Standard

Section XI, IWB-3514.

## Evaluation Standard (as applicable)

Section XI, IWB – 3640.

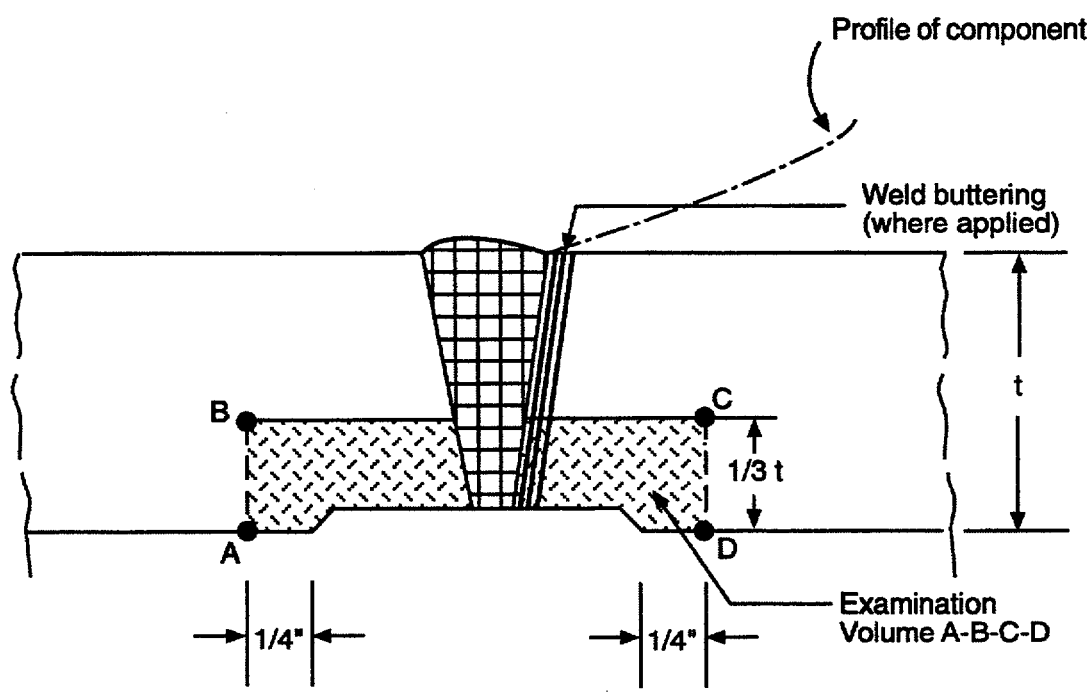


**Figure 4-5**
**Examination Volume for Chloride Cracking in Pipe Welds**

### *4.2.2 Crevice Corrosion Cracking*

#### Affected Region

Region where there are crevices (narrow gaps) that can deplete oxygen and concentrate chloride ions or other impurities, especially in welded attachments.

#### Examination Volumes

Volumes surrounding the weld, weld heat-affected zone, and base metal in the crevice region. Examination should focus on detection of cracks initiating and propagating from the inner surface.

#### Evaluation Volume Figures

See Figures 4-6 and 4-7.

#### Examination Method

Volumetric. Crevice corrosion cracking can be detected with NDE methods similar to those used for detection of IGSCC (see Section 4.4). Care must be taken to discriminate the crevice from cracking. Discrimination between cracks and crevices should be determined by comparing responses on a mockup.

#### Acceptance Standard

Section XI, IWB – 3514.

#### Evaluation Standard (as applicable)

Section XI, IWB - 3640 or IWB – 3650.

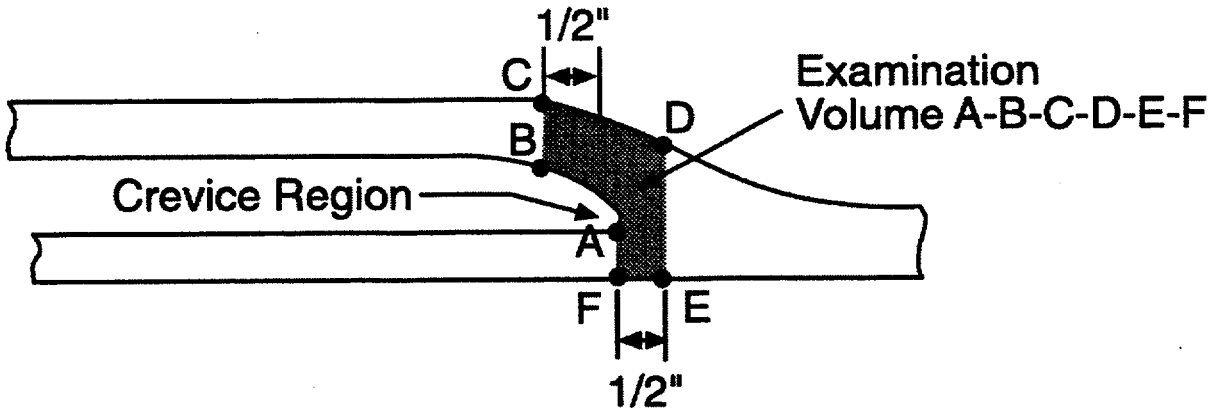


**Figure 4-6**
**Examination Volume for Crevice Corrosion Cracking in Nonwelded Attachment**

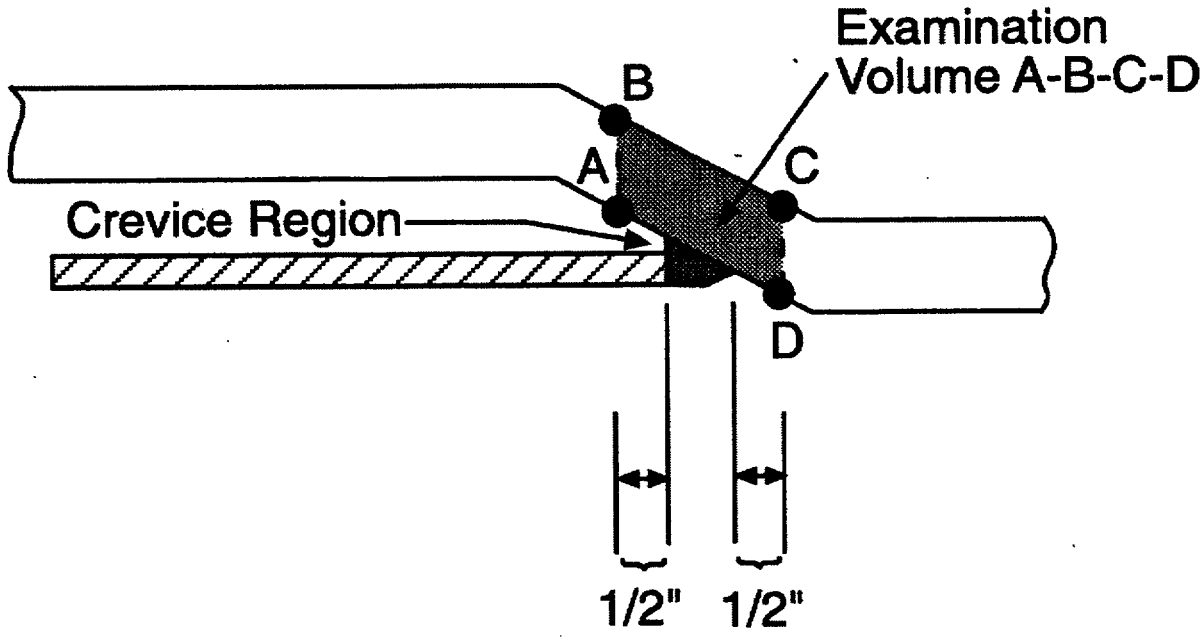


**Figure 4-7**
**Examination Volume for Crevice Corrosion Cracking in Welded Attachment**

## 4.3 PWSCC

### Affected Region

Mill annealed Alloy 600, including weld and weld heat-affected zones, in PWR primary system penetrations that have been cold worked or cold worked and welded, operate at temperatures greater than 620°F, and are exposed to primary coolant.

### Examination Areas

Areas surrounding the weld, weld heat-affected zone, and base metal near the cold worked or cold worked and welded regions.

### Examination Volume Figures

See Figure 4-8 for pipe connections. See Figure 4-9 for safe ends, note that inspection volume only includes the inner 1/3 thickness of the pipe, the pipe to safe end weld, and safe end.

### Examination Method

Visual examination of the outside surface for evidence of boric acid residue is typically used to detect through-wall PWSCC.

NDE techniques similar to the ultrasonic techniques used for detection of IGSCC, also may be used for detection of PWSCC. Eddy current techniques can be used when access to the inside surface of the piping is practical. It also is possible to use radiography for detection of this damage mechanism.

### Acceptance Standard

Section XI, IWB - 3142 and IWB-3514.

### Evaluation Standard (as applicable)

Section XI, IWB – 3640.

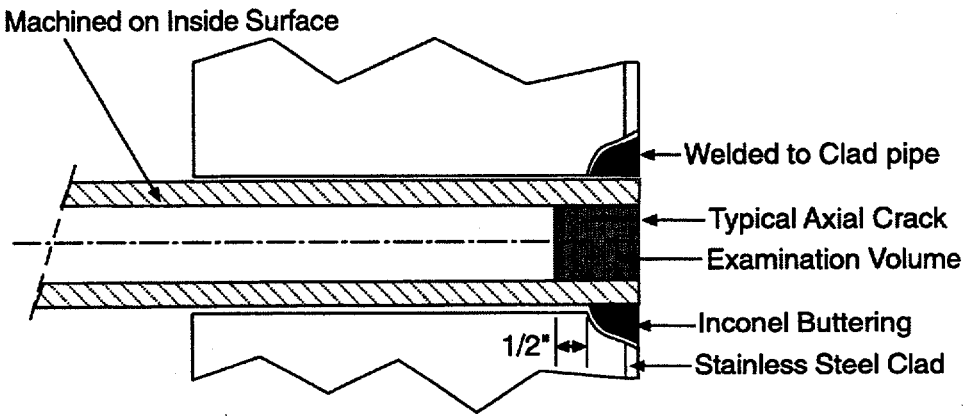


**Figure 4-8**
**Examination Volume for Primary Water Stress Corrosion Cracking in Pipe Connections**

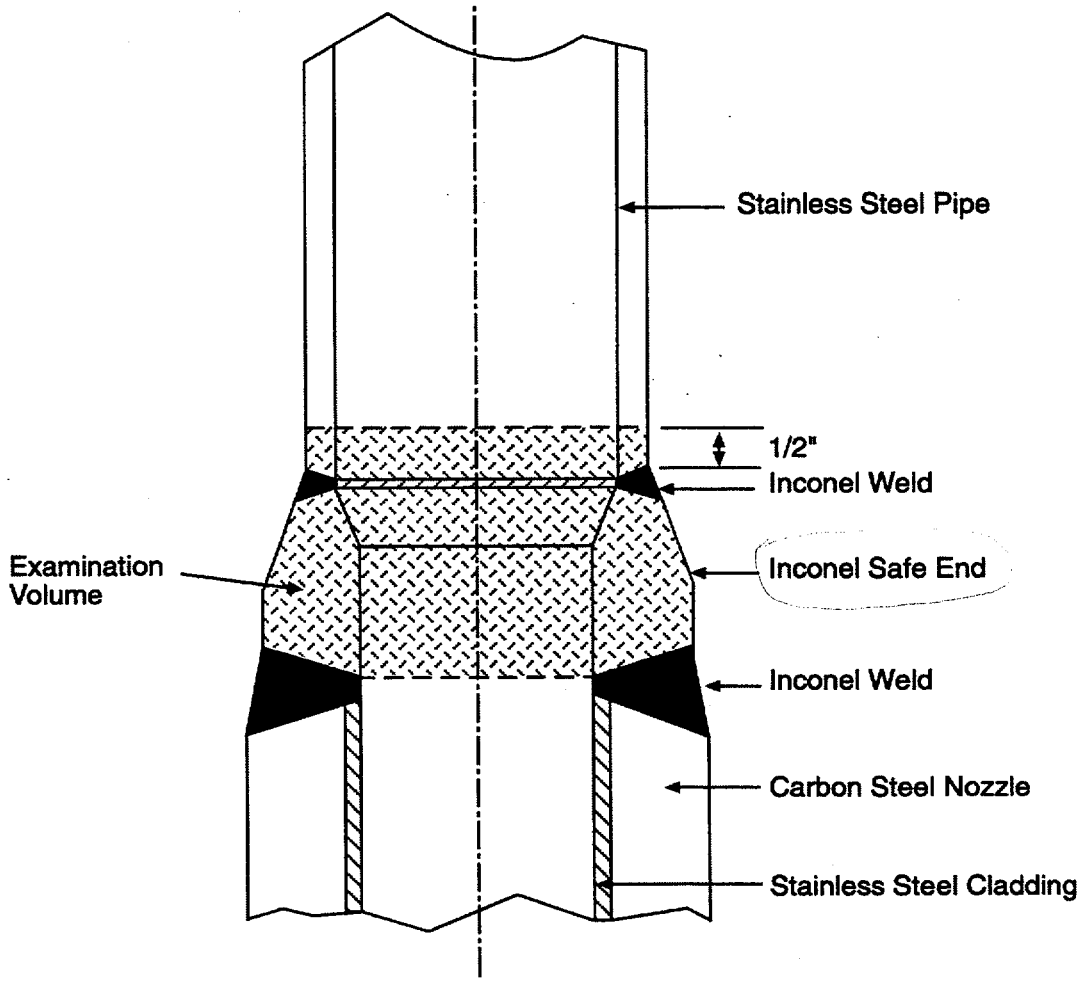


**Figure 4-9**
**Examination Volume for Primary Water Stress Corrosion Cracking in Safe Ends (inspection volume includes inner 1/3 thickness only)**

## 4.4 Intergranular Stress Corrosion Cracking (IGSCC)

### Affected Region

Welds identified to be susceptible to IGSCC, as identified in Section 3.4.

### Examination Volumes

Volumes surrounding weld and weld heat-affected zones. Selection of welds in segments within a given risk category should be based on the relative ranking of susceptible to IGSCC as specified in NUREG-0313, Rev. 2 (e.g., the most susceptible welds are the first welds selected for examination in a segment). Examination should focus on detection of cracks initiating and propagating from the inner surface.

### Examination Volume Figures

See Figures 4-10 through 4-14.

### Examination Method

Ultrasonic examination is to be conducted with procedures designed specifically for detection and characterization of IGSCC.

The IGSCC morphology is intergranular, propagating in a branch-like manner along the sensitized grain boundaries in the heat affected zone (HAZ). The length of the individual branches is generally proportional to the material grain size. In some pipe weldments, IGSCC penetrates the weld metal, but there have been no reported weld failures. Typically, IGSCC occurs nearer the weld fusion line in thicker wall components than in thin wall components. The cracks are tight and branched.

In marked contrast to carbon steel or low alloy steel where a constant ultrasonic velocity is normally encountered, the elastic anisotropy in austenitic weld material caused by the columnar grain structure leads to variations in propagation. Velocity and attenuation variations in the different directions, beam diffraction, beam skewing, reflection, refraction, and mode conversion occur in the austenitic weld material and at its interfaces. These circumstances combine to give material noise levels that make cracks undetectable through austenitic weld metal when using standard shear wave ultrasonic examination procedures.

During examination for circumferential cracks, anomalies, such as grain boundaries at these interfaces, reflect ultrasound to produce high material noise levels. The wavy interface scatters the sound beam in unexpected directions and/or produces undesirable reflections. However, circumferential IGSCC in the HAZ of austenitic welds has been detected successfully with ultrasonic techniques because, in this case, the sound beam does not pass through the weld metal.

The dendritic structure of the weld acts somewhat like a wave guide diverting the shear wave sound beam from the intended direction. Beam divergence makes indication location difficult.

When searching for axial cracks, the beam divergence is worse because almost the entire sound path lies in weld metal. The austenitic weld metal severely attenuates and scatters the shear wave beam and limits the effectiveness of the examination. The high attenuation limits penetration of the beam into the weld and the high material noise level prevents detection of significant flaws. The high attenuation and high noise level in the weld metal combine with the lack of good location information to make axial cracks undetectable using conventional, shear wave ultrasonic examination. Shear wave examinations are not capable of reliably detecting even large flaws in austenitic weld metal.

Examination techniques using refracted longitudinal wave methods have proven effective for examination of austenitic weld materials. Longitudinal waves suffer less attenuation and have a weaker dependence of velocity on anisotropy than do shear waves. Also, better penetration can be achieved with less noise, enabling detection of defects in locations which can not be examined with shear waves. However, a shear wave beam at a lower angle always accompanies the longitudinal wave and can be a source of additional spurious indications that must be taken into account. Even with longitudinal waves, a high material noise level is sometimes present, which can interfere with detection of small amplitude indications.

In this application, conventional shear wave examination relies on detecting the reflection from the corner formed by the flaw and the inner surface. With longitudinal waves, the corner reflection is usually weak because of mode conversion occurring at the reflecting surfaces; however, the diffracted signal from the crack tip is of primary interest.

Where access is available to both sides of the weld, examination techniques are to be applied from the base metal on each side of the weld such that the weld and near side base metal are completely examined from the near side.

Where access to both sides of the weld is not possible, examination procedures must be modified to detect flaws oriented nominally parallel to the weld. Detection of these flaws may be achieved using both shear and longitudinal wave techniques from one side of the weld and weld crown. The weld should be ground flush or flat-topped and the weld and far side base metal should be examined using refracted longitudinal and shear wave search units by scanning across the accessible base metal and weld. As a minimum, a 45° shear and longitudinal wave should be applied from the accessible weld crown. When examining from the weld surface, it might be necessary to scan at less than 3 inches per second.

Longitudinal wave frequencies lower than 2 MHz might be required for detection of flaws on the opposite side of the weld. This is permitted, provided a minimum signal-to-noise ratio of 10 to 1 is achieved from the inside surface notch in the basic calibration block. The search unit band width should be greater than 30%.

To effectively cover the examination area, it might be necessary to use shear wave search units with nominal angles of 45, 60, and 70°, as well as additional search units producing those angles with longitudinal waves.

No techniques are currently qualified for determining the length of reflectors using either shear or longitudinal waves through austenitic weld metal.

### Acceptance Standard

Section XI, IWB – 3514.

### Evaluation Standard

Section XI, IWB – 3640.

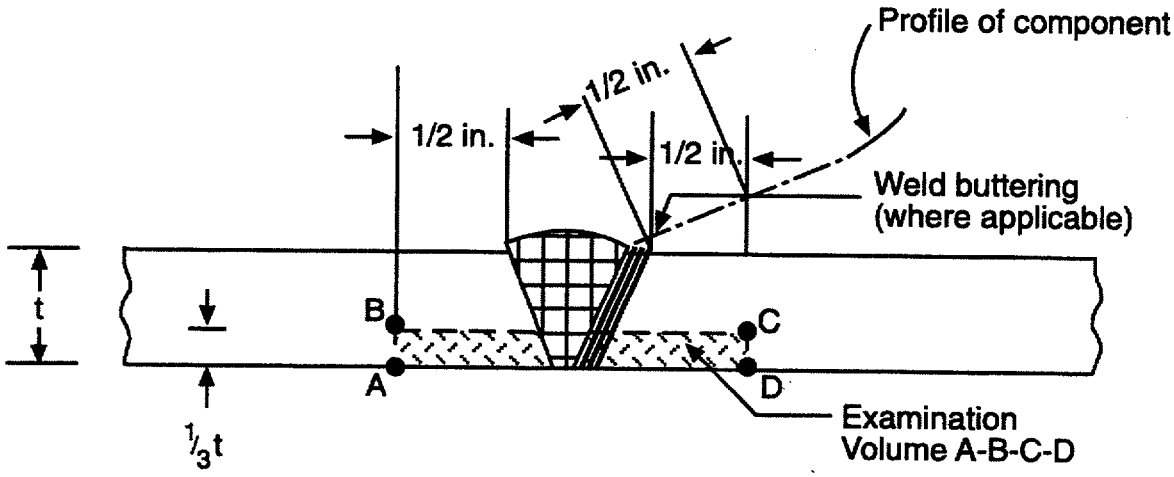


**Figure 4-10**
**Examination Volume for IGSCC in Piping Welds Less Than NPS 4**

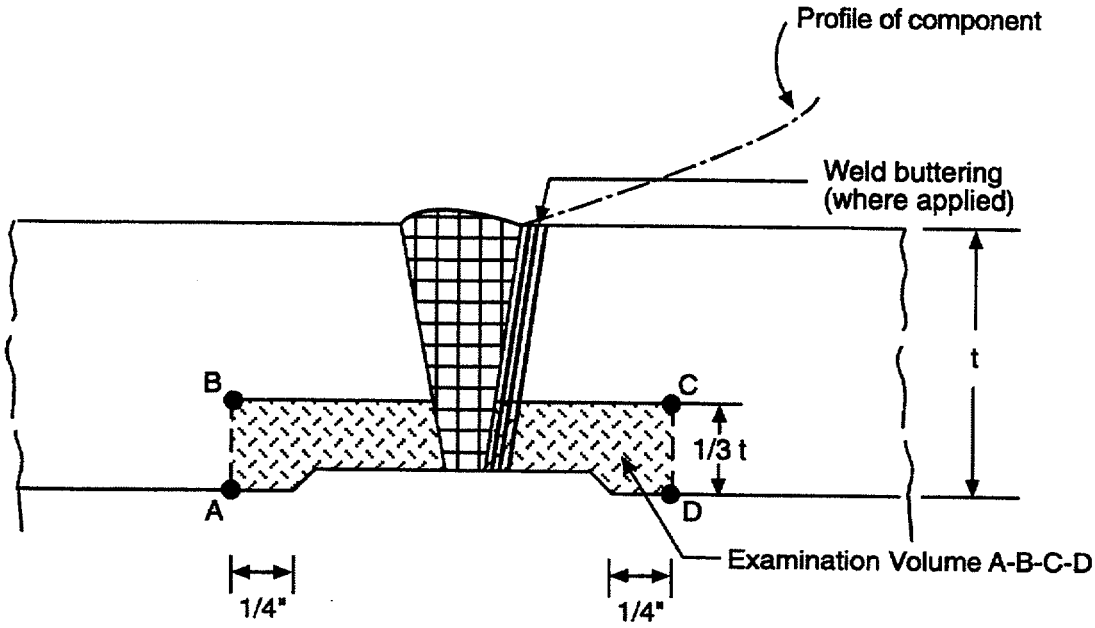


**Figure 4-11**
**Examination Volume for IGSCC in Piping Welds NPS4 or Larger**

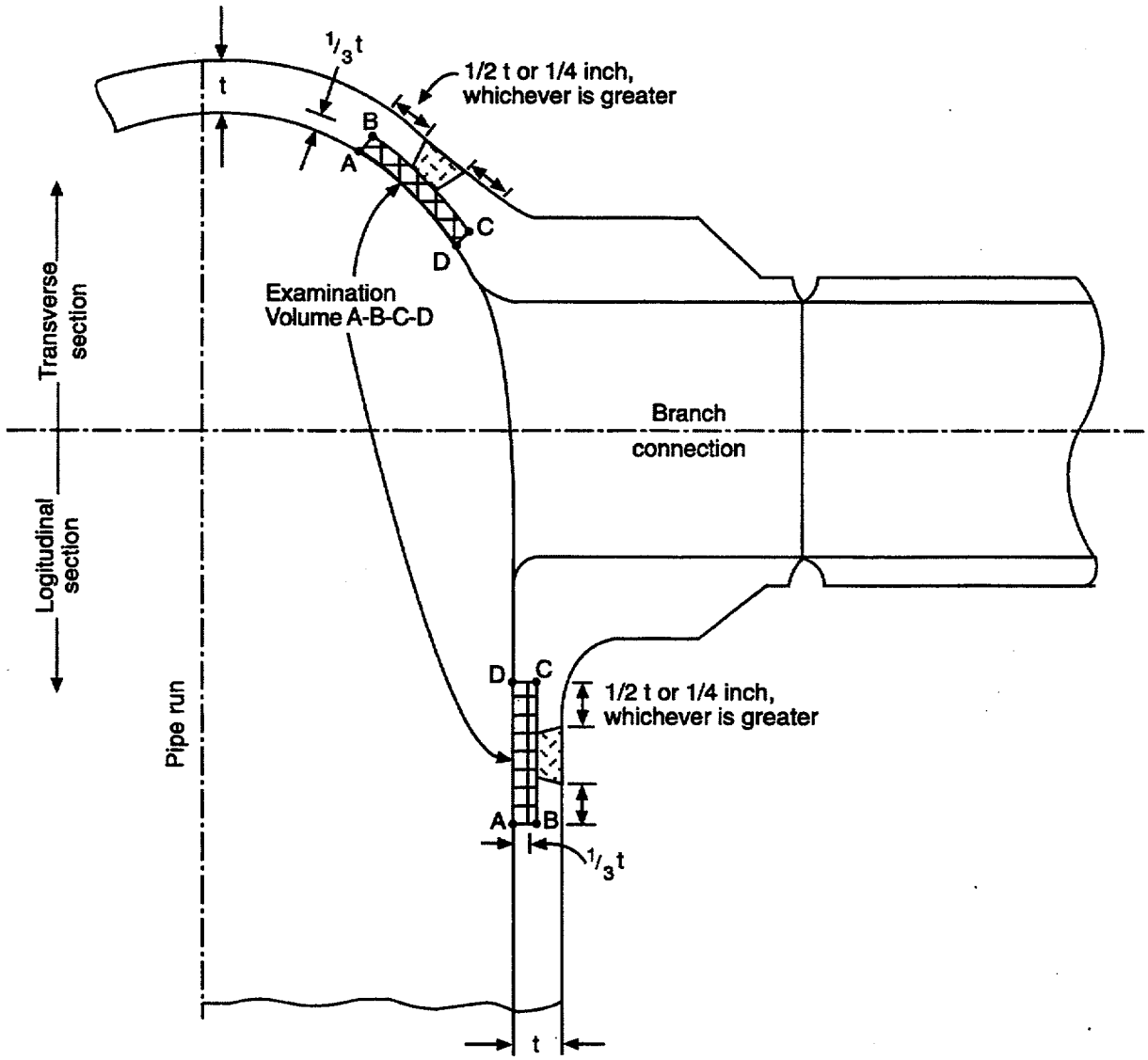


**Figure 4-12**
**Examination Volume for IGSCC in Branch Connections**

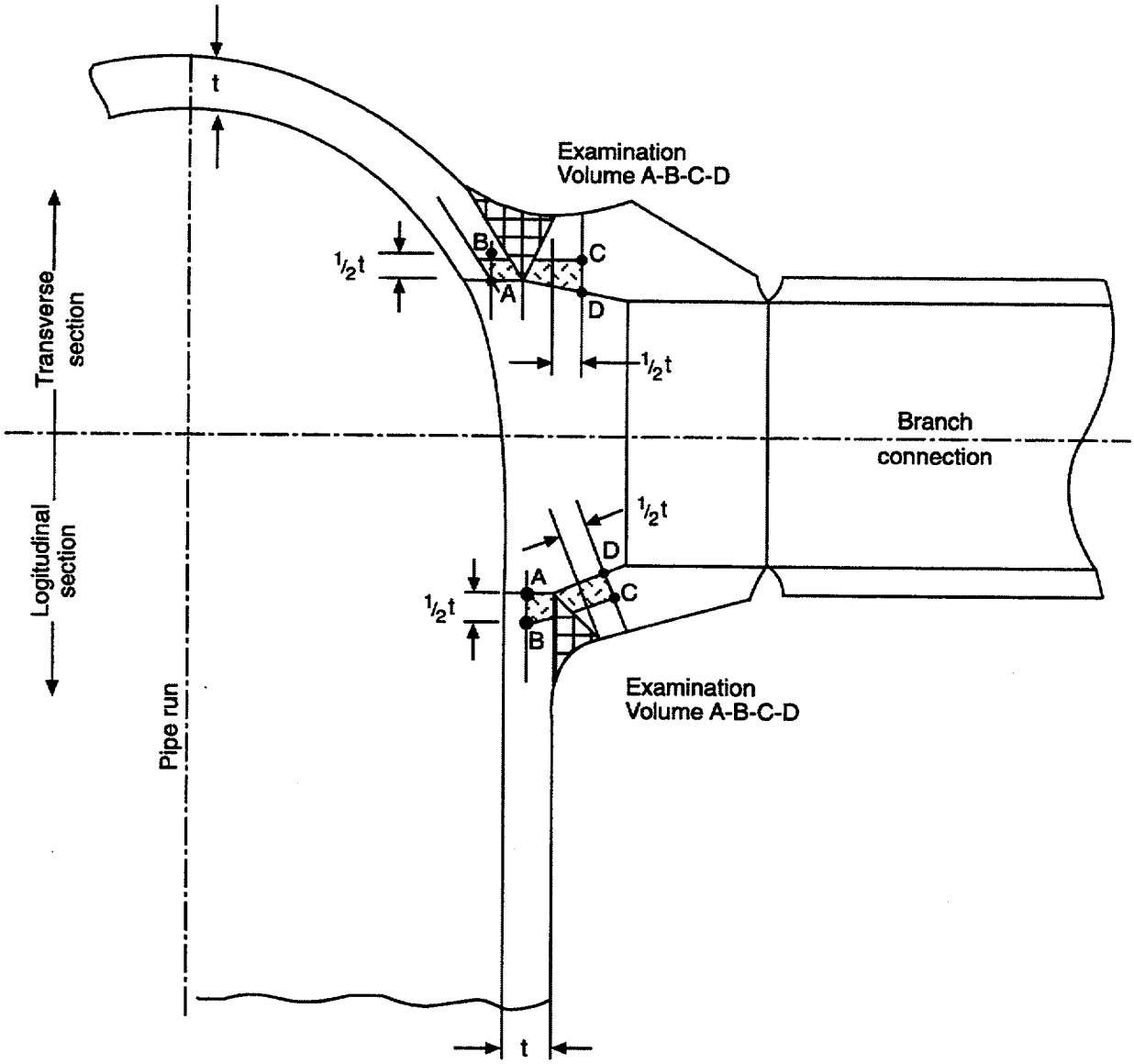


**Figure 4-13**
**Examination Volume for IGSCC in Branch Connections**

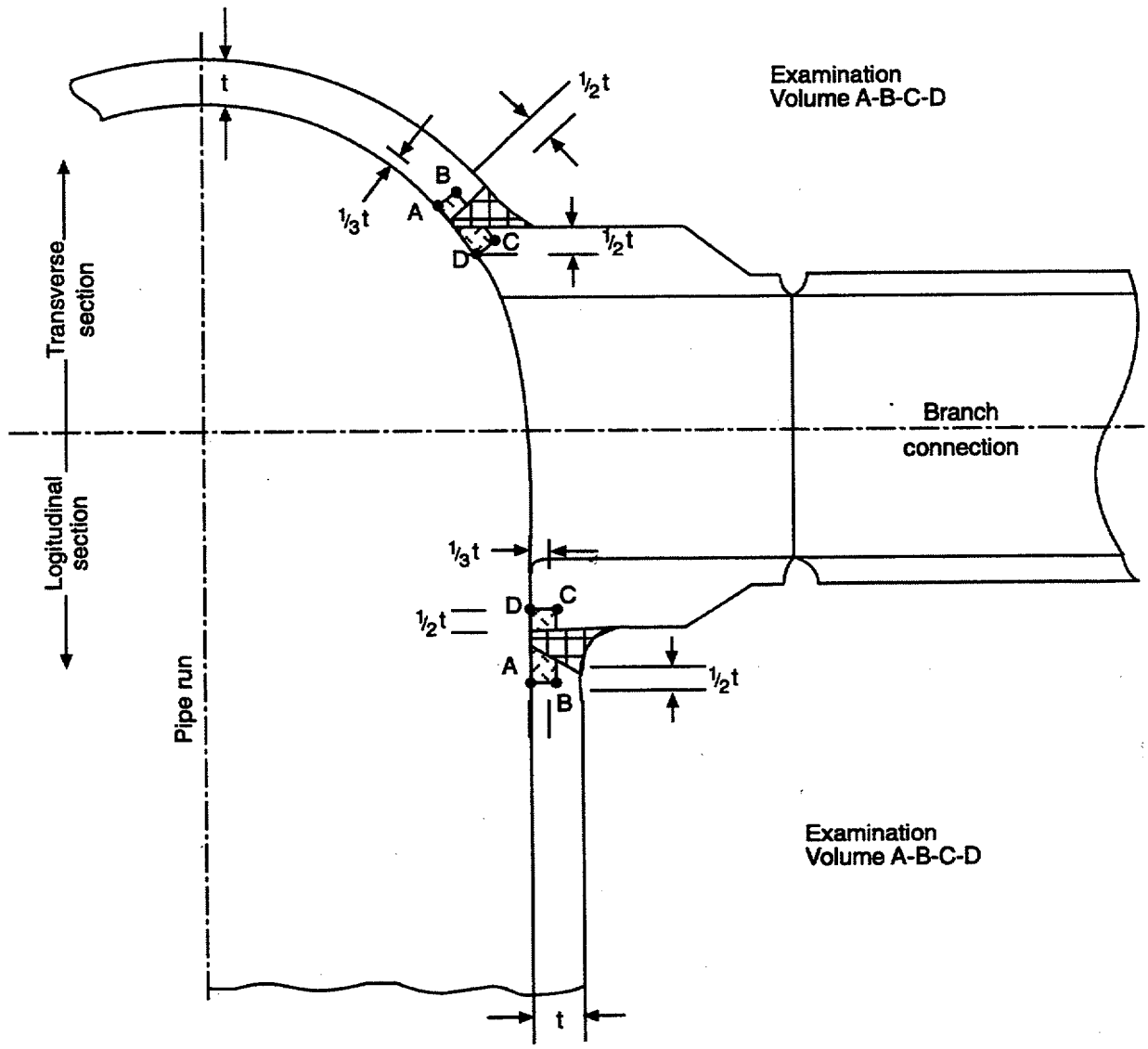


**Figure 4-14**
**Examination Volume for IGSCC in Branch Connections**

## 4.5 Microbiologically Influenced Corrosion (MIC)

### *Affected Region*

Piping components with fluids containing organic material or with organic material deposits. The most vulnerable components are raw water systems, storage tanks, and transport systems.

Systems with low to intermittent flow conditions, temperatures between 20-120°F, and pH below 10 are primary candidates.

### Examination Volumes

Base metal, welds and weld heat-affected zones in the affected regions of carbon and low alloy, and the welds and weld heat-affected zones in the affected regions of austenitic steel. The examinations should focus on regions where the degradation appears to be most prevalent as determined by visual inspection as described below in Examination Method section.

### Examination Volume Figures

See Figure 4-15.

### Examination Method

The examination method should be coupled with a monitoring program that defines the biological population found in the system. Visual techniques give indications when observations are made immediately upon opening a system. The presence of sludge/silt, metal sulfides, malodors, and general fouling/deposition are preliminary indicators of the possibility of MIC.

It is very important when examining components for MIC degradation to identify what the damage mechanisms will look like, as it will have a dramatic effect on the examination results. For example, uniform thinning is relatively easy to detect with ultrasonic examination, while pitting or tunneling might be easier to detect with radiography and quantified with ultrasonic examination. It is possible to detect pitting and tunneling with ultrasonic techniques. However, it might require slower scan speeds, higher instrument gain settings, and more sensitive transducers. In severe cases, tunneling damage results in a complete loss of ultrasonic signals.

Examination personnel should also be aware of the potential damage mechanisms so that they can select the appropriate examination method and procedure. Ultrasonic examination personnel need to be aware of the signal characteristics that might be associated with the damage mechanism.

For ultrasonic examinations, the complete area of interest should be examined, as MIC damage can be random. Grid patterns can be used with the entire grid scanned and the thin reading recorded. If point thickness readings are taken, it is important to consider that the probability of detection of thin locations has been reduced.

### Acceptance Standard

IWB-3514.

### Evaluation Standard

Wall thinning can be evaluated using the guidelines in ASME Code Case N-480. Pitting can be evaluated by using ASME Code Case N-480 where the degraded wall thickness is $t - t_r$, and $t_r$ is determined from the relationship $t_r$ = total volume of the detected pitting in the inspected length of pipe (circumferential extent of pitting x axial extent of pitting in the inspected region). The total pitting volume of the affected region can be determined by rectangular areas that encompass the degraded volume of pipe material.

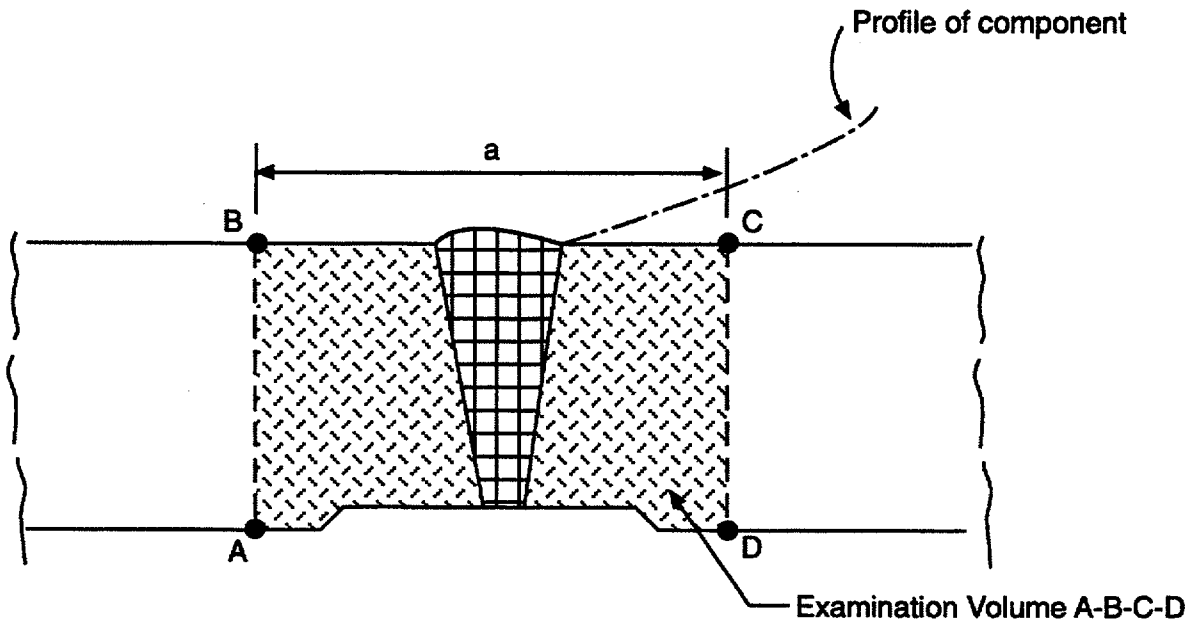


**Weld and HAZ**

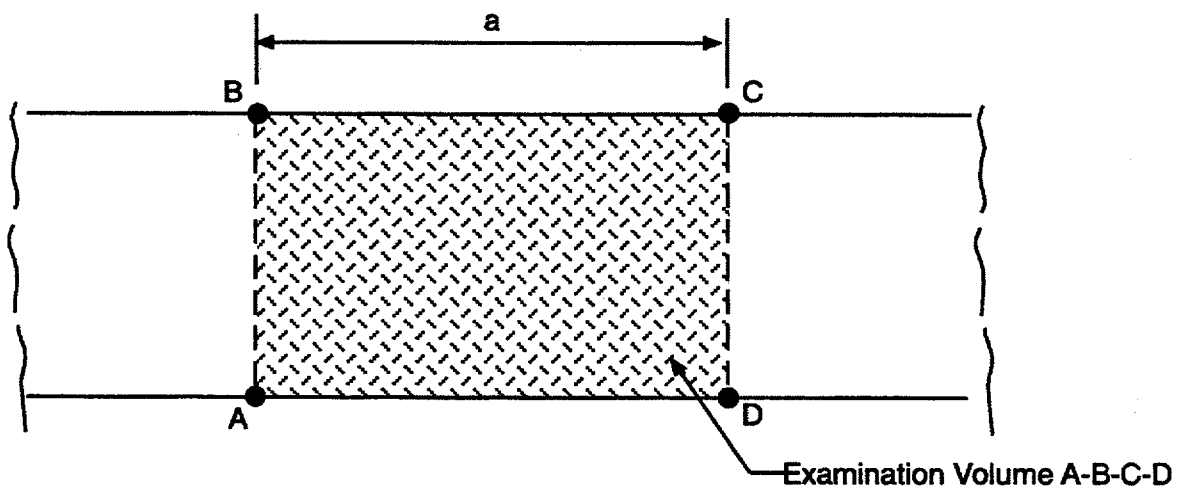


**Base Metal Only**

a = sufficient to characterize extent of MIC degradation

**Figure 4-15**
**Examination Volume for MIC**

## 4.6 Erosion-Cavitation

### *Affected Region*

Regions where $(p_d - p_v)/\Delta p < 5$ psi, and $V > 30$ ft/sec., and fluid temperature < 250°F are considered susceptible to degradation from erosion-cavitation, where pd is the static pressure downstream of the unit (pump, valve, etc.), $p_v$ is the vapor pressure, $\Delta p$ is the pressure differential across the unit, and V is the flow mean velocity at the inlet of the unit. Standard reducers do not create the potential for erosion degradation. Regions where flow occurs for less than 20 hrs./yr. are not considered susceptible to degradation from erosion-cavitation.

### *Examination Volumes*

The volume of material, including base metal, welds, and weld heat-affected zone, within 5D downstream of the cavitation source. If an elbow is within 5D of the cavitation source, then the affected region extends to the first weld past the elbow. Examination should focus on wall thinning from the inside surface. The actual volume selected within the 5D length can be determined in a manner similar to that used to define the inspection region for the plant FAC inspection program (see Section 4.7).

### *Evaluation Volume Figures*

See Section 4.7, Flow-Accelerated Corrosion (FAC).

### *Examination Method*

Erosion-cavitation is detectable with visual, ultrasonic, or radiographic examination methods. The preferred NDE method depends on the specific location where erosion-cavitation is expected, but may include ultrasonic thickness measurements, radiographic tangential and double wall techniques, as well as visual examination.

### *Acceptance Standard*

See Section 4.7, FAC.

### *Evaluation Standard*

See Section 4.7, FAC.

## 4.7 Flow-Accelerated Corrosion (FAC)

### *Affected Region*

Component base metal regions susceptible to FAC, as identified in Section 3.4.

### *Examination Volumes*

Volume of material susceptible to FAC as identified in the existing plant FAC inspection program, or for the purpose of RI-ISI identified in accordance with the plant FAC evaluation criteria.

### *Examination Volume Figures*

See Figures 4-16 through 4-22.

### *Examination Method*

Volumetric. Manual ultrasonic examination is typically used to detect and measure component walls for single and two phase FAC. Most piping systems that are susceptible to FAC operate at elevated temperatures, hence they have insulation that must be removed and the surface prepared prior to the ultrasonic examination. Because the damage mechanism is gradual wear over an area rather than isolated thickness loss, spot thickness readings at predetermined locations can be done rather than 100% examination. The spot thickness locations should be identified in a procedure that provides a method of girding the component in a repeatable fashion. The thickness readings should be taken at the grid intersections. It is important that the location of each thickness reading be repeated for future examinations, as thickness data is often used to identify and trend pipe wear.

Although the ultrasonic technique used for acquiring thickness data is one of the least complicated ultrasonic techniques, it is important that adequate procedures are in place to ensure accurate repeatable results. Equipment selection is one of the more important variables associated with this technique. Transducers must be selected based on the applicable thickness range. It is also important to use an ultrasonic instrument with an A-scan presentation so that volumetric reflectors do not provide inaccurate data. Portable digital thickness gauges with A-scan presentations are available and have been found to provide adequate results.

As an alternative to ultrasonic examination, radiography can be used to detect and measure FAC. However, the procedure is generally limited to pipes of 6-inch NPS and less because of long exposure times for larger diameter piping. A tangential radiographic technique that aligns the source, pipe wall, and film can be used to obtain quantitative thickness data, however several shots are required to examine a component. The primary benefit of radiography is that it can be used to examine components with insulation in place, eliminating the cost associated with insulation removal and reinstallation. Radiography also provides better data on socket welded components than ultrasonics.

### Acceptance Standard

According to the plant FAC program.

### Evaluation Standard

According to the plant FAC program.

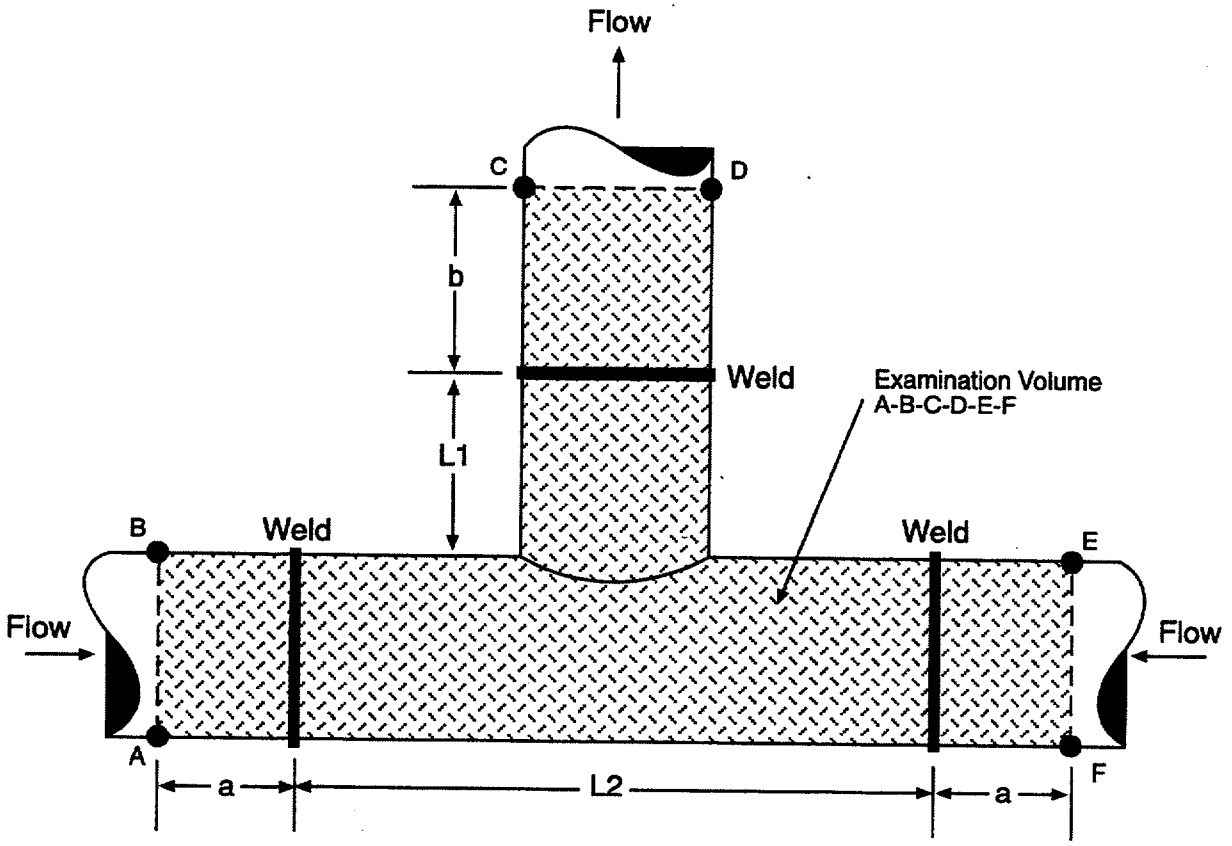


a = minimum of 2 grid lines

b = minimum of 2 grid lines or 6 inches, whichever is greater

**Figure 4-16**
**Examination Area for FAC**

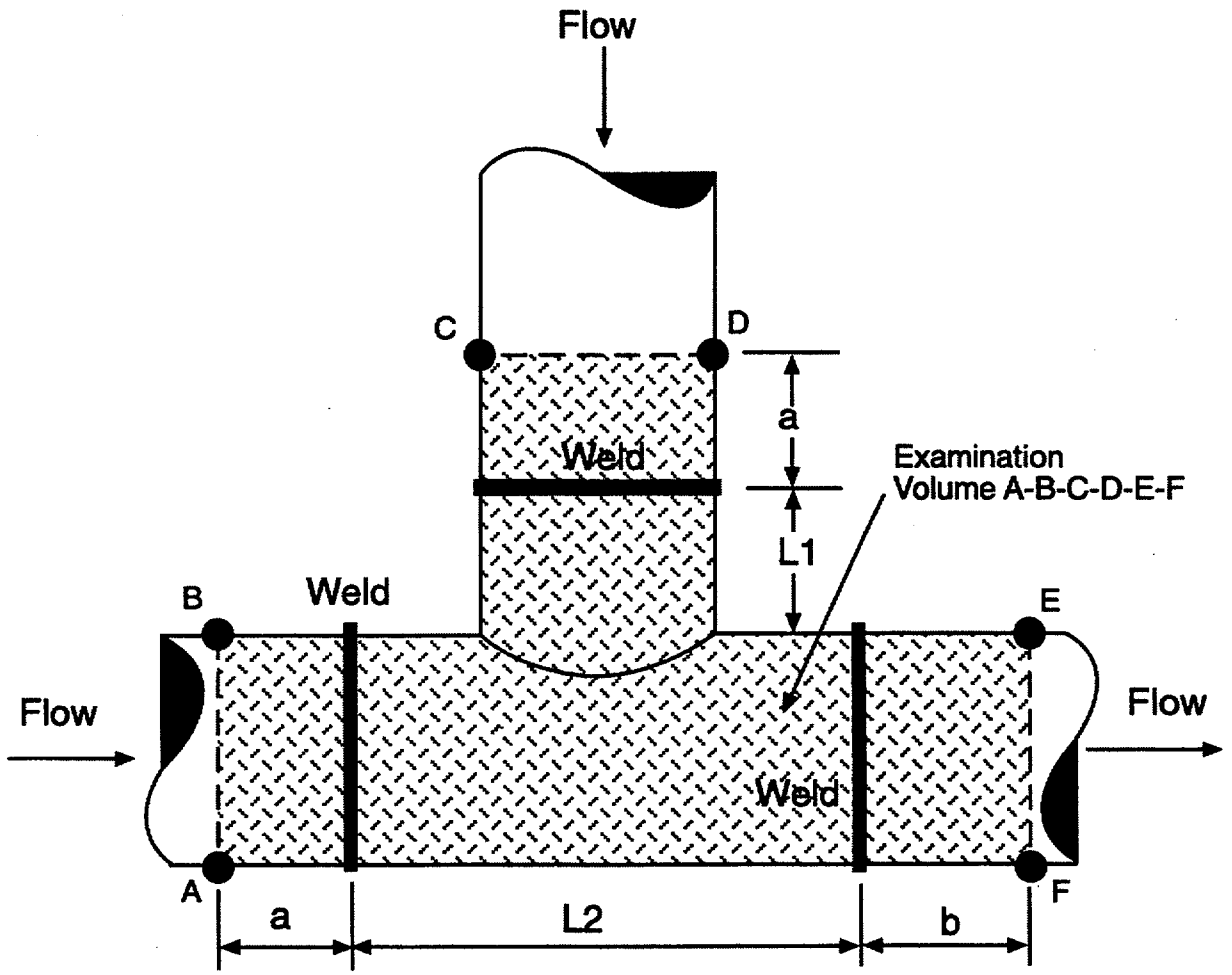


a = minimum of 2 grid lines

b = minimum of 2 grid lines or 6 inches, whichever is greater

**Figure 4-17**
**Examination Area for FAC**

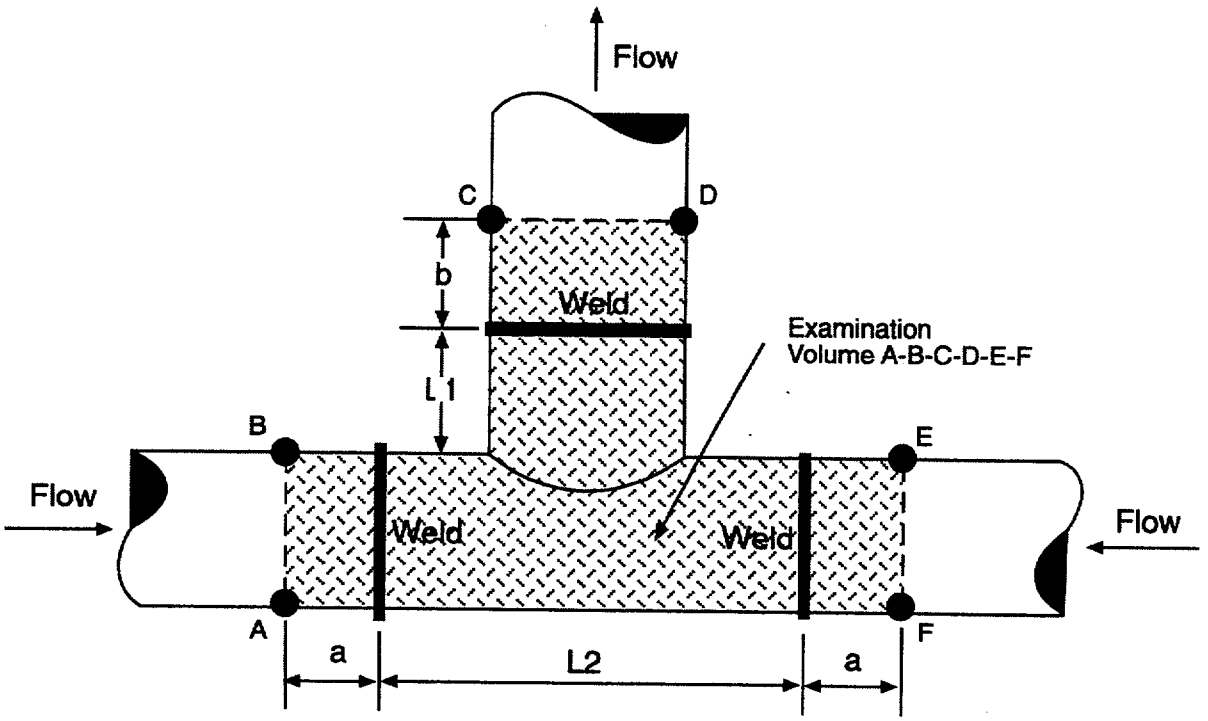


a = minimum of 2 grid lines

b = minimum of 2 grid lines or 6 inches, whichever is greater

**Figure 4-18**
**Examination Area for FAC**

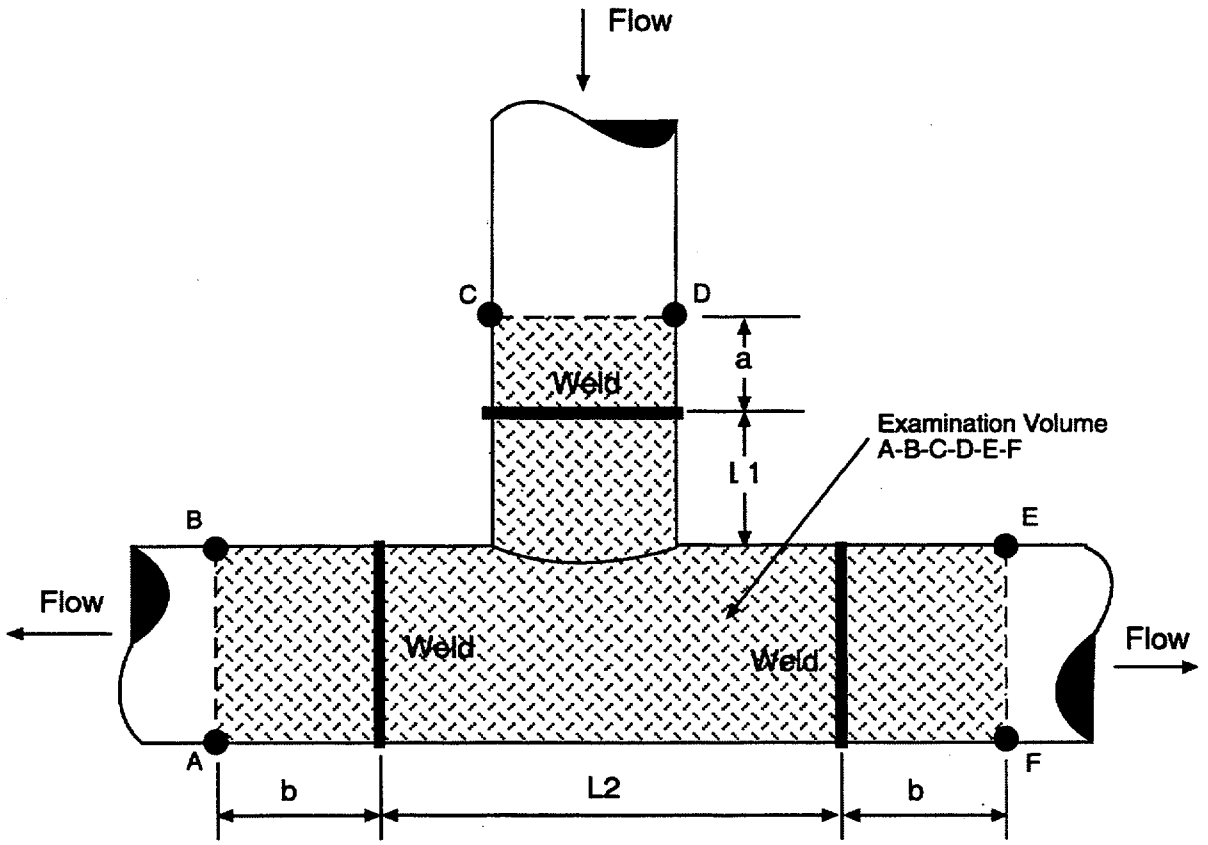


a = minimum of 2 grid lines

b = minimum of 2 grid lines or 6 inches, whichever is greater

**Figure 4-19**
**Examination Area for FAC**

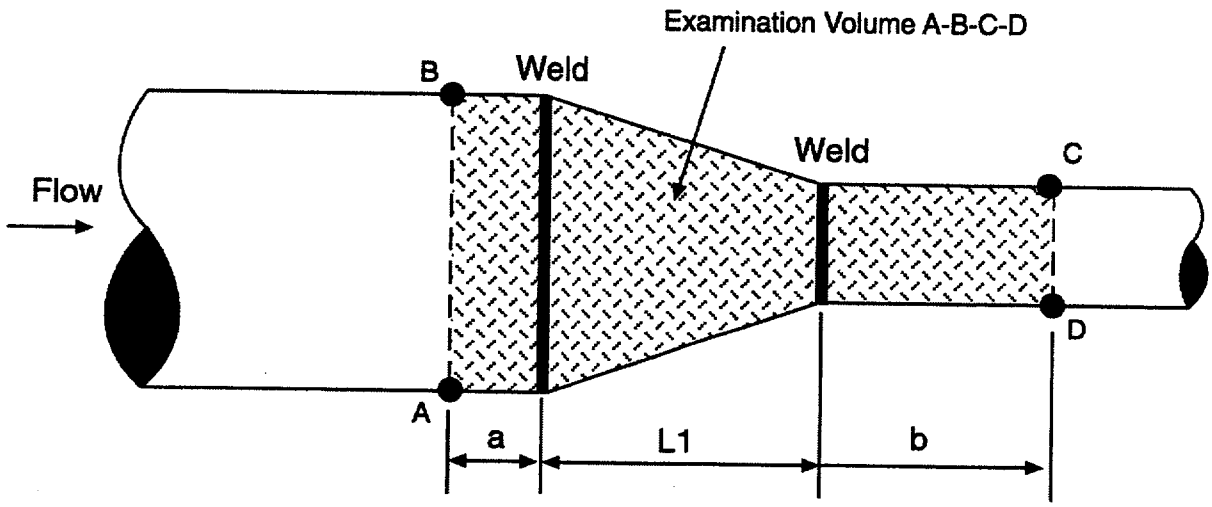


a = minimum of 2 grid lines

b = minimum of 2 grid lines or inches, whichever is greater

**Figure 4-20**
**Examination Area for FAC**

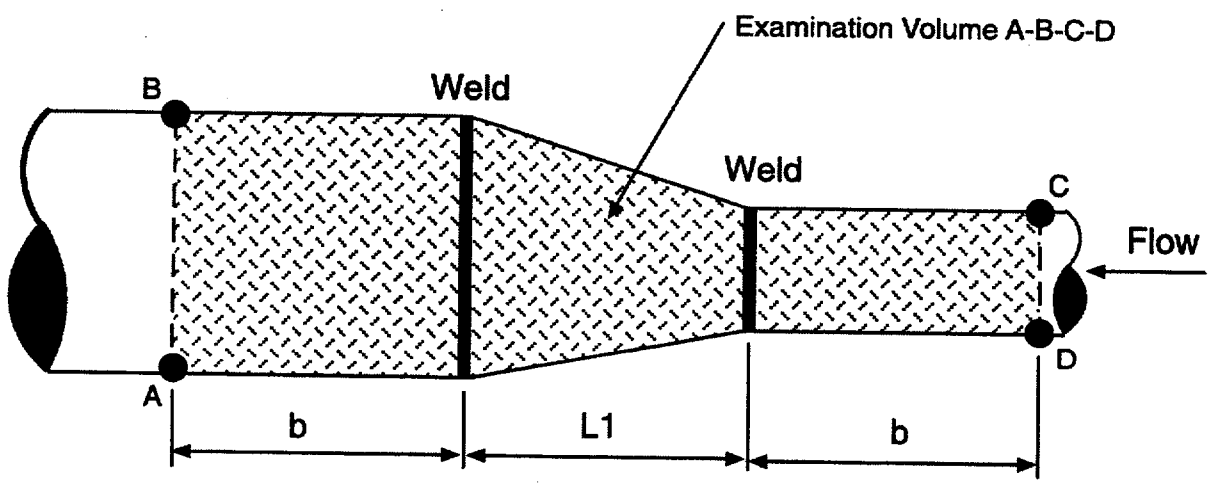


b = minimim of 2 grid lines or 6 inches, whichever is greater

**Figure 4-21**
**Examination Area for FAC**

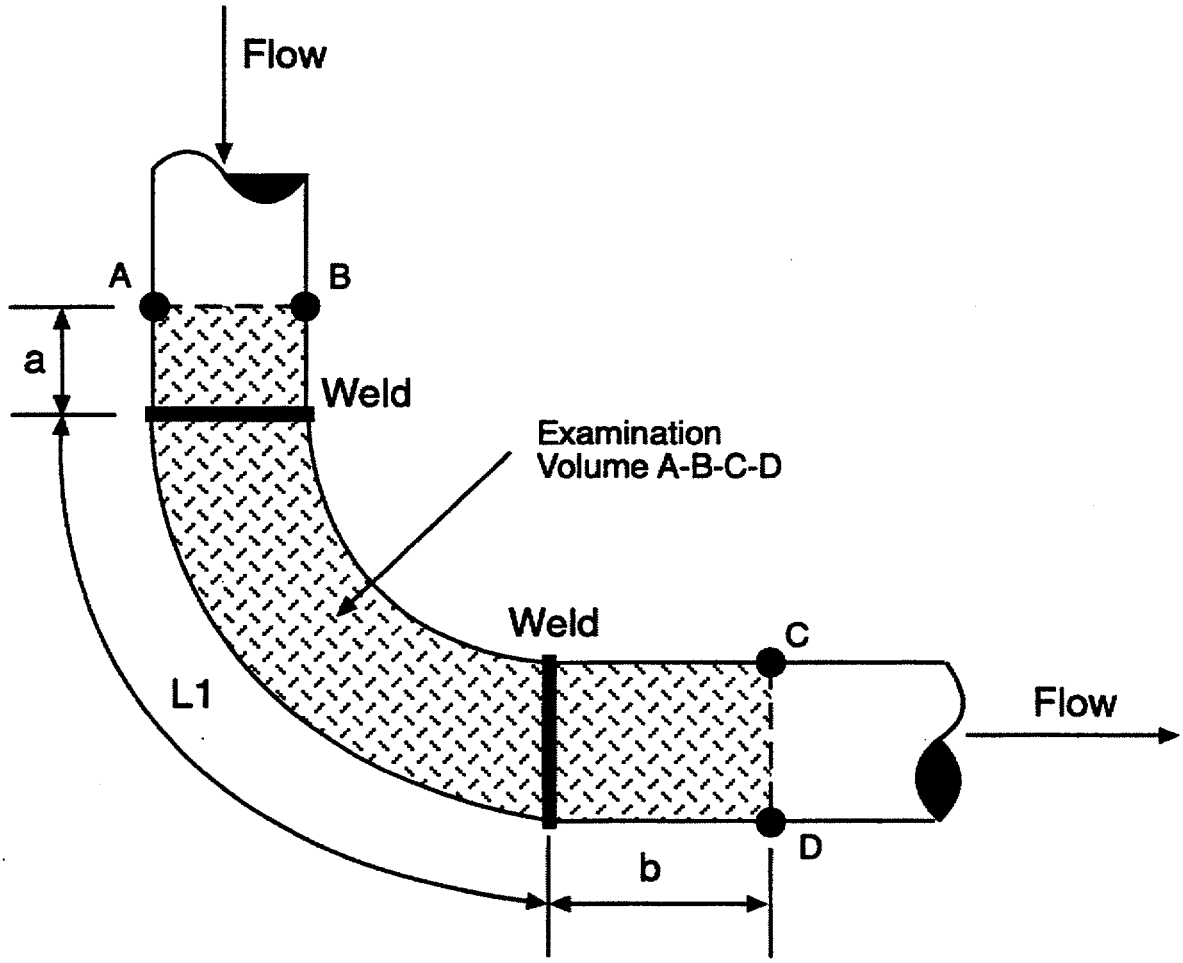


a = minimum of 2 grid lines

b = minimim of 2 grid lines or 6 inches, whichever is greater

**Figure 4-22**
**Examination Area for FAC**

# 5
# PLANT INFORMATION REQUIREMENTS AND DOCUMENTATION

## 5.1 Plant Information Requirements

The evaluation process begins by assembling information that will determine the scope of the analysis. This information is necessary for defining the systems to be analyzed, and the boundaries of those systems, and identifying the elements to be evaluated within the system boundaries. The information and support that is needed for the evaluation process is summarized as follows:

### *Evaluation Documentation*

- ISI program plan,
- ISI isometrics,
- P&IDs (for applicable systems),
- Spatial databases (IPE/IPEEE/Appendix R, etc.)
- Flooding/spray studies (IPE/IPEEE/MELB/HELB),
- System training manuals,
- PSA Information (PSA/IPE/IPEEE),
- Material specifications,
- Line lists,
- Valve lists,
- System design basis documents,
- Flow-accelerated corrosion (FAC) program description,
- IGSCC program description,
- Plant service experience (i.e., cracking, water hammer, FAC event history, etc.),
- Normal, abnormal and emergency operating procedures,
- Annuciator corrective actions.

### Evaluation Personnel Support

- ISI personnel,
- PSA personnel,
- Operations personnel,
- System/design engineers,
- Walkdown access.

### Miscellaneous

- Cost drivers (i.e., which systems, locations, etc.)
- Worker exposure (i.e. hot spots, time consuming examinations)

## 5.2 Documentation

Documentation of the RI-ISI effort involves two general requirements: 1) documentation of the risk-informed evaluation, and 2) documentation of the revised ISI program. This section discusses those attributes that will be useful in providing the necessary documentation. As ISI programs for all plants must meet the requirements of 10CFR50, Appendix B, documentation supporting the revised ISI program must also meet the utilities' quality assurance requirements.

The intent of the documentation requirements identified herein are three fold. The first intent is to provide evidence of the risk-informed evaluation effort and its inputs. Generally, this Tier 1 information will be retained, documented, and organized in the FMEA database. As such, this database should provide a readily retrievable and auditable evaluation package. This documentation is described in Section 5.2.1.

The second level of documentation is required to support the Appendix B review of the evaluation as well as a means for future re-creation and/or modification of the risk-informed effort. This Tier 2 documentation tends to consist of marked-up drawings and supplemental calculations that will need to be retained in hard copy or microfilmed/fiched media. This is discussed in Section 5.2.2.

The third level of documentation, or Tier 3 is the actual submittal to the NRC. Templates [57] for an NRC submittal to implement an RI-ISI program according to the ASME Code Case N-560 and N-578 are being developed separately. These templates were developed by the NEI Task Force on RI-ISI with favorable indications that these templates will meet NRC expectations and will support an expedited review process. The content of these templates is further described in Section 5.2.3.

Tier one and two information shall be retained and be retrievable on site for potential NRC audit. As a minimum it shall contain the following:

1. Scope definition,
2. Segment definition,
3. Failure/damage mechanism assessment,
4. Consequence evaluation,
5. PSA model runs for the RI-ISI program (if any),
6. Risk evaluation,
7. Element and NDE method selection,
8. Change in risk evaluation,
9. PSA quality review,
10. Continual assessment forms as program changes in response to inspection results,
11. Documentation required by ASME Code (including inspection personnel qualification, inspection results, and flaw evaluations).

### *5.2.1 Tier 1 Documentation—FMEA Database*

The information necessary to support the risk-informed evaluation is required to meet the utility's quality assurance program requirements. Summary information can be retained in the FMEA database. This database should contain the following information:

#### Element Information

This type of information consists of the type of element, its location, system identification, and current ISI status. A typical report form is presented in Table 5-1.

#### Segment Information

Provides information on segment identification, description, elements included, and consequence of failures. A typical report form is presented in Table 5-2.

#### Degradation Mechanism Identification

Identifies applicable degradation mechanisms for each element and the basis for its assignment. A typical report form is presented in Table 5-3.

### Consequence Evaluation

Contains information on the impact of individual failures; spatial effects, initiating events, system impacts, recovery potential, etc. Typical report forms are presented in Tables 5-4 and 5-5.

### Risk Evaluation

For each segment, summary information is provided that contains applicable degradation mechanisms, degradation mechanism category, consequences, consequence category and risk category. A typical report form is presented in Table 5-6.

### Element Selection

Contains information on which elements were selected for inspection and the inspection method to be used on each inspection.

## *5.2.2 Tier 2 Documentation*

Tier 2 documentation is required to support the review of the evaluation effort and to provide a means of re-creating and/or modifying the results. This type of information generally consists of marked-up drawings and supplemental calculations that need to be retained in hard copy or microfilm. Tier 2 documentation contains the following types of information:

### Piping System Configuration

The information needed to support this task consists of the following:

- Current ISI program,
- ISI isometric drawings,
- P&IDs,
- Piping design specification,
- Material and fabrication specification,
- Inspection cost data.

### Damage Mechanisms

In addition to the above, the information needed to support this task consists of the following:

- System training manuals,
- Design basis documents,
- Operating conditions,
- Plant-specific service experience,
- Line lists.

### Consequence Evaluation

In addition to the above, the data needed to support this task consists of the following:

- FSAR,
- Spatial databases (such as IPEEE, Appendix R, etc.),
- Flooding/spray studies (such as HELB, MELB, IPEEE, etc.),
- PSA analyses (e.g., IPE, IPEEE).

Marked-up drawings detailing system boundaries and analysis boundaries, supplemental calculations and additional sources of information (telecons, interviews, etc.) needed to be retained.

### *5.2.3 Tier 3 - Licensing Submittal Requirements*

As described above, the results of the RI-ISI analysis will be submitted to the NRC for approval in the form of a 'template.' [57] These templates will contain the following information as a minimum:

1. Justification for statement that PSA is of sufficient quality,
2. Summary of risk impact,
3. Current inspection Code,
4. Impact on previous relief requests,
5. Revised FSAR pages impacted by the change, if any,
6. Process followed (EPRI Report, Code Case, and exceptions to methodology, if any),
7. Summary of results of each step (e.g., number of segments in each of the risk categories one through seven, number of locations to be inspected, etc.),
8. A statement that Reg Guides principles are met (or any exceptions),
9. Summary of changes from current ISI program,
10. Summary of any augmented inspections that would be impacted.

## 5.3 Licensing Basis and PSA

The EPRI methodology does not explicitly incorporate the necessary activities to assure, on a plant specific basis, that the licensing basis is met. Each individual application must be conducted on a plant specific basis by utilizing the latest drawings, procedures, operating and design information. It is incumbent upon the licensee to assure all licensee commitments continue to be met or appropriate notification is conducted. The following three tiered process provides one approach to assuring a technically sound RI-ISI evaluation:

Each calculation and/or analyses supporting the RI-ISI application would have a preparer, a reviewer, and an approver. The responsibilities of each would be as follows:

### Preparer

The preparer would be technically competent in the subject matter. The preparer would prepare the document in a logical manner so that a competent individual can review the work without recourse to the originator. The focus would be to provide a clear, legible, accurate, defendable, and retrievable document. The preparer would ensure:

- The range of values which may be applicable for all inputs, and select and justify the values relative to the objective of the calculation are considered,
- The problem has been properly constructed and/or modeled,
- The calculational method is reasonable and defendable,
- The input data are valid, verified and appropriately documented, including internal and external interfaces, governing documents and revision level,
- The design inputs are consistent with the plant design bases and previous safety calculations and analyses,
- The assumptions are identified, reasonable, consistent with plant design bases, justified and are documented,
- The calculation is mathematically correct,
- The results are consistent with conclusions and conclusions adequately address calculation objective(s), and
- The comments provided by the independent reviewer are resolved.

### Reviewer

The reviewer would be technically competent in the subject matter and not have immediate supervisory responsibility for the preparer. The reviewer would be responsible for independently reviewing, confirming and substantiating the calculation/analyses. The reviewer would verify that the calculation has been prepared in accordance with the discussion above. The reviewer would ensure that all review comments are satisfactorily incorporated or dispositioned.

### Approver

The approver would be responsible for assuring that the calculation/analyses were performed and reviewed by qualified individuals who have technical competence in the subject matter. The approver would also provide a level of oversight to assure that the calculation satisfies its objective, and is technically sound and audible.

### *PSA Considerations*

Plant PSA inputs are used in the consequence evaluation portion of the EPRI methodology. For the pilot plants, the latest drawings, procedures, operating and design information was included in the evaluation to ensure the use of the PSA was up-to-date with the current plant configuration and operations. In addition, walkdowns and plant reviews are conducted to further assure that the evaluation was validated. A similar process was used in the original development of plant PSAs which included internal plant reviews and external peer reviews (Generic Letter 88-20).

Also, individual plant change control processes (e.g., significant hazards consideration, unreviewed safety issue, 10CFR50.59, 10CFR50.92) ensure that the impact on the inservice inspection program as well as other plant programs are identified and evaluated and, as necessary, modified.

The consequence evaluation portion of the EPRI Methodology does utilize PSA inputs; the PSA Application Guide (EPRI TR-105396 [21]) provides general guidance and standards that should be followed for each application.

The following are judged to be key attributes an/or areas of the PSA where quality is considered relatively important to support a consistent RI-ISI application:

- Success Criteria - The PSA success criteria for classes of initiating events (e.g., several LOCA sizes and transient) are used in the methodology; this is documented and compared to other similar plant PSAs (e.g., same NSSS). This success criteria is fundamental to the methodology in that it is used to establish the number of backup trains for each function.
- Unavailability - The unavailability of backup trains in the above success criteria should be checked to ensure that the order of magnitude estimate incorporates any operator actions and common cause. For example, failure of relief valves could be on the order of 1E-4 or less, but the operator failure probability could be on the order of 1E-3 or less. Therefore, 1.5 backup trains (1E-3) would be credited instead of 2 backup trains (1E-4). These results are also compared with similar plants for reasonableness.
- Initiators - An important input from the PSA is initiator CDF and initiator frequency. Success criteria and unavailabilities above can be used as an order of magnitude check of conditional core damage probability (CCDP) for different initiators.
- Spatial Impacts - Internal flooding studies provide major insights into propagation and potential flooding impacts. Although somewhat redundant to previous studies, it is recommended that plant specific walkdowns be conducted to investigate propagation, and the impact of sprays and flooding.

The EPRI methodology was developed to utilize the PSA as a tool in developing more appropriate risk-informed inservice inspection programs. As such, EPRI realized that plant PSAs constitute significantly more than a computer model and associated software. Changes to the PSA model as a result of the RI-ISI effort have not been identified as part of the pilot plant efforts, as the risk associated with pressure boundary failures tend to be small in comparison to other events. However, risk insights gained from these efforts (usually documented outside of the PSA model) have been obtained.

## 5.4 Plant Walkdown

The impact of a pipe failure and resulting interactions with other components are assessed as part of the consequence evaluation. A system walkdown is conducted to support the assessment. Generally, direct effects are confined to the system itself; however, indirect impacts resulting from the failure of a pipe segment can affect neighboring equipment within the system or other system(s). Indirect impacts associated with pipe breaks are generally caused by flooding, spraying, or jet impingement of neighboring equipment. The objective of the walkdown is to identify these impacts and capture subtle interactions that could not be readily identified by reviewing the information contained in the plant's internal flood screening study, the plant PSA, and the various plant design drawings.

For the pilot studies, this task involved a walkdown of the flow paths for each line included in the system boundaries. In performing this task, the various plant locations (i.e., flood zones) containing system piping were visited. Pipe breaks at various locations were postulated, and the significance of spatial impact due to flooding, spraying, or jet impingement was discussed among the team members. Based on physical barriers (i.e., larger piping and piping supports) in place that could minimize the spatial effects and the relative distance of equipment that might be impacted, a consensus was reached regarding the equipment that would most likely be impacted.

In case flooding occurred, the locations of equipment above floor level were noted and whether a significant amount of water could accumulate within the flood zone. Rooms with non-water-tight doors were judged to be incapable of accumulating a significant amount of water in a flood zone. In such cases, flooding of equipment within the flood zone was judged to be of no significance. The number of floor drains and the flood detection capabilities within the flood zone were noted as part of the walkdown. The propagation paths for the outflow from the flood initiation zone to the lowest elevation were noted during the walkdown. Features incorporated in the plant design to guard against flooding of safety-related equipment were examined in order to assess the significance of a pipe failure.

Equipment located in the vicinity of a postulated pipe break might be subject to spraying or jet impingement. Physical barriers in the trajectory path that provided protection were noted and credited in assessing the potential impact caused by spraying or jet impingement. Valve motors that were environmentally qualified were considered capable of performing their functions, even though spraying or jet impingement of these valves might occur.

The insights gained during the walkdown were incorporated in the consequence assessment. An example detailed walkdown assessment from one system in a pilot study is provided in reference [10].

**Table 5-1**
**FMECA—Element Identification and ISI Status**

| System ID | Segment | Line Number | Line Description | Weld Number | Weld Location | Weld Type | Weld Material | Weld Class | Examination Category | Category Item | Current Examination |
|---|---|---|---|---|---|---|---|---|---|---|---|
| LPSI-A | LPSI-A32 | RH-0155-05-2501-6 | RHR to Cold Leg 1 | 5 | Upstream side of Elbow - Downstream from RH-V15 | Butt | SS | 1 | | | |
| LPSI-A | LPSI-A32 | RH-0155-05-2501-6 | RHR to Cold Leg 1 | 4 | Field Weld Downstream side of Elbow - Downstream from RH-V15 | Butt | SS | 1 | B-J | B9.11 | V,S |
| LPSI-A | LPSI-A32 | RH-0155-05-2501-6 | RHR to Cold Leg 1 | 3 | Upstream side of Elbow - Downstream from RH-V15 | Butt | SS | 1 | B-J | B9.11 | V,S |
| LPSI-A | LPSI-A32 | RH-0155-05-2501-6 | RHR to Cold Leg 1 | 2 | Downstream side of Check Valve RH-V15 | Butt | SS | 1 | B-J | B9.11 | V,S |
| LPSI-A | LPSI-A32 | RH-0155-05-2501-6 | RHR to Cold Leg 1 | 9 | Field Weld Upstream side of RH-V59 | Butt | SS | 1 | | | |
| LPSI-A | LPSI-A33 | RH-0155-05-2501-6 | RHR to Cold Leg 1 | 13 | Upstream side of Elbow - Downstream from RH-V59 | Butt | SS | 1 | | | |
| LPSI-A | LPSI-A33 | RH-0155-05-2501-6 | RHR to Cold Leg 1 | 19 | Upstream side of Reducer - Downstream from RH-V59 | Butt | SS | 1 | | | |
| LPSI-A | LPSI-A33 | RH-0155-05-2501-6 | RHR to Cold Leg 1 | 18 | Downstream side of Elbow - Downstream from RH-V59 | Butt | SS | 1 | | | |
| LPSI-A | LPSI-A33 | RH-0155-05-2501-6 | RHR to Cold Leg 1 | 17 | Upstream side of Elbow - Downstream from RH-V59 | Butt | SS | 1 | | | |
| LPSI-A | LPSI-A33 | RH-0155-05-2501-6 | RHR to Cold Leg 1 | 16 | Downstream side of Elbow - Downstream from RH-V59 | Butt | SS | 1 | | | |

**Table 5-2**
**FMECA—Segment Identification**

| Segment | Segment Description | Line Number | Welds | Number of Welds | Pipe Diameter (Inches) | Segment Wall Thickness (Inches) |
|---|---|---|---|---|---|---|
| LPSI-A01 | RHR Pump A (RH-P-8A) Discharge to Check Valve RH-V4 | RH-0151-01-0601-8 | 1, 2, 32 | 3 | 8 | 0.322 |
| LPSI-A02 | RHR Pump A Discharge Between Check Valve RH-V4 and FE-610 | RH-0151-01-0601-8 | 3, 31, 4, 5, 6, 7, 8 | 7 | 8 | 0.322 |
| LPSI-A03 | RHR Pump A Discharge, Outlet of FE-610 (Erosion) | RH-0151-01-0601-8 | 9 | 1 | 8 | 0.322 |
| LPSI-A04 | RHR Pump A Discharge, Outlet of FE-610 (No Erosion) | RH-0151-01-0601-8 | 10 | 1 | 8 | 0.322 |
| LPSI-A05 | RHR Pump A Discharge, Between FE-610 and Manual Valve RH-V9 (IGSCC) | RH-0151-01-0601-8 | 11, 12 | 2 | 8 | 0.322 |
| LPSI-A06 | RHR Pump A Discharge, Between FE-610 and Manual Valve RH-V9, including Manual Valve RH-V9 Line | RH-0151-01-0601-8 | 13, 14, 15, 16, 17, 18, 19, 20, 21, 22 | 10 | 8 | 0.322 |
| LPSI-A07 | RHR Pump A Discharge, Between Manual Valve RH-V9 and RHR Heat Exchanger (RH-E-9A) (IGSCC) | RH-0151-01-0601-8 | 23, 24 | 2 | 8 | 0.322 |
| LPSI-A08 | RHR Pump A Discharge, Between Manual Valve RH-V9 and RHR Heat Exchanger (RH-E-9A) (No IGSCC) | RH-0151-01-0601-8 | 25, 26 | 2 | 8 | 0.322 |

## Table 5-3
## FMECA—Degradation Mechanisms

| System ID | Segment | Line Number | Line description | Weld Number | Weld Location | T | CC | PW | I | M | E |
|---|---|---|---|---|---|---|---|---|---|---|---|
| LPSI-A | LPSI-A30 | RH-0155-04-2501-6 | RHR to Cold Leg 1 | 3 | Field Weld Downstream side of Flange for FE-2557 | N | N | N | N | N | S |
| LPSI-A | LPSI-A31 | RH-0155-05-2501-6 | RHR to Cold Leg 1 | 1 | Upstream side of Check Valve RH-V15 | N | N | N | N | N | N |
| LPSI-A | LPSI-A32 | RH-0155-05-2501-6 | RHR to Cold Leg 1 | 7 | Upstream side of Elbow - Downstream from RH-V15 | N | N | N | N | N | N |
| LPSI-A | LPSI-A32 | RH-0155-05-2501-6 | RHR to Cold Leg 1 | 8 | Downstream side of Elbow - Downstream from RH-V15 | N | N | N | N | N | S |
| LPSI-A | LPSI-A32 | RH-0155-05-2501-6 | RHR to Cold Leg 1 | 6 | Downstream side of Elbow - Downstream from RH-V15 | N | N | N | N | N | N |
| LPSI-A | LPSI-A32 | RH-0155-05-2501-6 | RHR to Cold Leg 1 | 5 | Upstream side of Elbow - Downstream from RH-V15 | N | N | N | N | N | N |
| LPSI-A | LPSI-A32 | RH-0155-05-2501-6 | RHR to Cold Leg 1 | 4 | Field Weld Downstream side of Elbow - Downstream from RH-V15 | N | N | N | N | N | N |
| LPSI-A | LPSI-A32 | RH-0155-05-2501-6 | RHR to Cold Leg 1 | 3 | Upstream side of Elbow - Downstream from RH-V15 | N | N | N | N | | S |
| LPSI-A | LPSI-A32 | RH-0155-05-2501-6 | RHR to Cold Leg 1 | 2 | Downstream side of Check Valve RH-V15 | N | N | N | N | N | N |
| LPSI-A | LPSI-A32 | RH-0155-05-2501-6 | RHR to Cold Leg 1 | 9 | Field Weld Upstream side of RH-V59 | N | N | N | N | N | N |

**Degradation Mechanisms**

T - Thermal Fatique
CC - Corrosion Cracking
PW - Primary Water Stress Corrosion Cracking (PWSCC)
I - Intergranular Stress Corrosion Cracking (IGSCC)
M - Microbiologically Influenced Corrosion (MIC)
E - Erosion - Cavitation
EE - Erosion - Corrosion
O - Other

**Table 5-4**
**FMECA—Consequences—Spatial Effects**

| Segment | Segment Description | Line Number | Welds | Break Size | Isolability of Break | ISO Comments | Spatial Effects |
|---|---|---|---|---|---|---|---|
| LPSI-A31 | RHR Cold Leg 1 Injection, Check Valve RH-V15 Inlet | RH-0155-05-2501-6 | 1 | Large | Yes | Break needs to be isolated in order to prevent a loss of RWST volume. RWST can be isolated by closing MOV RH-V14 (in CE/PP) or MOV CBS-V2 (RHR-Vault1). | Local |
| LPSI-A32 | RHR Cold Leg 1 Injection, Between Check Valve RH-V15 and Valve RH-V59 | RH-0155-05-2501-6 | 2, 3, 4, 5, 6, 7, 8, 9 | Large | Yes | Break needs to be isolated in order to prevent a loss of RWST volume. RWST can be isolated by closing MOV RH-V14 (in CE/PP) or MOV CBS-V2 (RHR-Vault1). | Local |
| LPSI-A33 | RHR Cold Leg 1 Injection, Between Valve RH-V59 and Common Header with Accumulator | RH-0155-05-2501-6 | 10, 11, 12, 13, 14, 15, 16, 17, 18, 19 | Large | Yes | Break needs to be isolated in order to prevent a loss of RWST volume. RWST can be isolated by closing MOV RH-V14 (in CE/PP) or MOV CBS-V2 (RHR-Vault1). | Local |

**Table 5-5**
**FMECA—Consequences—Impact**

| Segment | Segment Description | Line Number | Weld Numbers | Initiating Event | Initiating Event ID | Initiating Event Recovery | Loss of System | IPE System ID | System Recovery | Loss of Train | Train ID | Train Recovery |
|---|---|---|---|---|---|---|---|---|---|---|---|---|
| LPSI-A32 | RHR Cold Leg 1 Injection, Between Check Valve RH-V15 and Valve RH-V59 | RH-0155-05-2501-6 | 2, 3, 4, 5, 6, 7, 8, 9 | None | | | No | | | M-2 | LPSI-A, CBS-A | It is assumed that two trains can be lost because an operator can select to close MOV CBS-V2, in order to isolate the break. If break is isolated by closure of MOV RH-V14, only LPSI-A will be lost. SI injection to Cold Leg 1 can be affected.<br><br>The efect is not considered significant. |
| LPSI-A33 | RHR Cold Leg 1 Injection, Between Valve RH-V59 and Common Header with Accumulator | RH-0155-05-2501-6 | 10, 11, 12, 13, 14, 15, 16, 17, 18, 19 | None | | | No | | | M-2 | LPSI-A, CBS-A | It is assumed that two trains can be lost because an operator can select to close MOV CBS-V2, in order to isolate the break. If break is isolated by closure of MOV RH-V14, only LPSI-A will be lost. SI injection to Cold Leg 1 can be affected.<br><br>The efect is not considered significant. |

**Table 5-6**
**FMECA—Risk Ranking**

## Segment Risk Ranking Report

| Segment ID | Number of Welds in Segment | Lines in Segment | Welds in Segment | Degradation Mechanisms | Degradation Mechanism Category | Consequence Category | Risk Category | Risk Rank |
|---|---|---|---|---|---|---|---|---|
| CS-008 | 2 | 10-W23-902-5A | 10-14-491A, 10-14-491 | N | NONE | HIGH | CAT4 | MEDIUM |
| CS-011 | 2 | 16-W23-152-1A | 16-14-701, 16-14-700 | N | NONE | HIGH | CAT4 | MEDIUM |
| CS-020 | 2 | 10-W23-902-5B | 10-14-512A, 10-14-512 | N | NONE | HIGH | CAT4 | MEDIUM |
| CS-023 | 2 | 16-W23-152-1B | 16-14-801, 16-14-800 | N | NONE | HIGH | CAT4 | MEDIUM |
| CS-001 | 1 | 10-W23-1504-5A | N-5A-SE | C, I | SMALL LEAK | MEDIUM | CAT5 | MEDIUM |
| CS-002 | 2 | 10-W23-1504-5A | 10-14-471, 10-14-472 | I, TS | SMALL LEAK | MEDIUM | CAT5 | MEDIUM |
| CS-003 | 1 | 10-W23-1504-5A | 10-14-473A | TS | SMALL LEAK | MEDIUM | CAT5 | MEDIUM |
| CS-004 | 2 | 10-W23-1504-5A | 10-14-473, 10-14-474 | I, TS | SMALL LEAK | MEDIUM | CAT5 | MEDIUM |
| CS-005 | 5 | 10-W23-1504-5A | 10-14-475, 10-14-476, 10-14-477, 10-14-480, 10-14-481 | I | SMALL LEAK | MEDIUM | CAT5 | MEDIUM |
| CS-013 | 8 | 10-W23-302-8A // 10-W23-163-9A | 8-14-779, 8-14-780 // 10-14-781, 10-14-782, 10-14-783, 10-14-784, 10-14-785, 10-14-785A | F | LARGE LEAK | LOW | CAT5 | MEDIUM |
| CS-014 | 1 | 10-W23-1504-5B | N-5B-SE | C, I | SMALL LEAK | MEDIUM | CAT5 | MEDIUM |
| CS-015 | 2 | 10-W23-1504-5B | 10-14-492, 10-14-493 | I, TS | SMALL LEAK | MEDIUM | CAT5 | MEDIUM |
| CS-016 | 1 | 10-W23-1504-5B | 10-14-493A | TS | SMALL LEAK | MEDIUM | CAT5 | MEDIUM |
| CS-017 | 2 | 10-W23-1504-5B | 10-14-494, 10-14-502 | I | SMALL LEAK | MEDIUM | CAT5 | MEDIUM |

# 6
# CONFORMANCE WITH APPLICABLE REGULATORY GUIDES

The purpose of this section is to discuss how implementation of the EPRI procedure for RI-ISI is expected to conform to applicable codes and standards as well as regulatory guidance. The early development of the EPRI approach to RI-ISI procedures and much of its application in the early pilot plants occurred before NRC developed its draft, final, and trial use guides for risk informed applications [2,3,4,5]. The early work in the EPRI project did, however, benefit from industry initiatives in risk informed decision making such as the EPRI PSA Applications Guide [21] and the ASME Code Cases for RI-ISI of piping systems [11,12,13] which were based in part on results of EPRI sponsored research. In addition, when the NRC issued its draft regulatory guidance for risk informed in-service inspection [30] and conducted a public workshop to solicit comments and input in finalizing its regulatory guidance in this area, EPRI took an active role to provide relevant insights from the RI-ISI program. Hence, it comes as no coincidence that proper implementation of the EPRI methodology for RI-ISI as described in Section 2 and supporting references is expected to be in conformance with applicable codes and standards and regulatory guidance.

A more complete discussion of how implementation of this approach is expected to address the key principles of risk informed decision making as set forth in Regulatory Guide 1.174 is provided in Section 6.1. In Section 6.2, an analysis of the conformance to Regulatory Guide 1.178 that is expected to result from proper application of this approach is briefly summarized. These conformance issues were one of the topics of an extensive examination conducted by the NRC in their review of EPRI TR-106706 [7] and associated pilot plant studies that were documented in a set of Requests for Additional Information[17] which were responded to in Reference [18]. The parts of this dialogue that pertain to conformance issues are discussed in Section 6.3.

## 6.1 Conformance with RG 1.174

As noted in Section 2 of RG 1.174, an acceptable approach to risk informed decision making must ensure that the following principles are met:

1. "The proposed change meets the current regulations unless it is explicitly related to a requested exemption or rule change, i.e., a "specific exemption under 10 CFR 50.12 or a "petition for rulemaking" under 10 CFR 2.802.

2. The proposed change is consistent with the defense-in-depth philosophy.

3. The proposed change maintains sufficient safety margins.

4. When proposed changes result in an increase in core damage frequency or risk, the increases should be small and consistent with the intent of the Commission's Safety Goal Policy Statement.

5. The impact of the proposed change should be monitored using performance based strategies."

A discussion of how the EPRI method for RI-ISI addresses each of these principles was provided in response to the NRC RAIs on EPRI TR-106706 [18], and is summarized below:

### Meeting Current Regulations

Upon approval of this topical report by the NRC, it is expected that licensees performing future implementations will request relief per 10CFR50 using the appropriate "template" (see Section 5 for a discussion of the template content). [57] EPRI does not anticipated that there will be any unique regulatory considerations associated with the EPRI method, and therefore, expects that future risk informed applications that use the EPRI approach will adhere to the appropriate regulatory requirements.

Currently (1999) ASME Code Cases N-560 and N-578 are being revised to reflect lessons learned from the pilot plant process. It is envisioned that, in the longer term RI-ISI applications will be made by implementing ASME Code Case N-560 for a scope covering B-J welds in Class 1 systems, or ASME Code Case N-578 for alternate piping system scope. This approach will be followed once these code case have been incorporated into Regulatory Guide 1.147.

### Maintenance of Defense-in-Depth Philosophy

The EPRI approach to RI-ISI meets the NRC requirements to maintain defense. To address these defense in depth issues, it is instructive to characterize the role that piping systems play in the defense in depth design principle and to review the potential changes in piping system performance that could be conceivably brought about. This provides a context for evaluating each aspect of defense-in-depth.

The piping systems in a nuclear power plant contribute to defense in depth in two important ways: The piping of the reactor coolant system and systems that directly interface with the RCS provide one of the sets of barriers in the barrier defense in depth arrangement. This barrier protects the release pathway from the reactor core to containment release pathways and part of it is responsible for protecting against potential containment bypass pathways. The second way piping contributes to defense in depth is its role in the protection of the core through providing critical safety functions that require that piping system integrity.

The role that inspection programs can play in determining the risk significance of piping systems is rather limited and well defined. Piping inspections can play a role in identifying defects and degradation in piping system elements. When defects and degradation damage are found and repaired, pipe failures are precluded and the probability of pipe rupture reduced. In addition, pipe inspections and leak tests and detection processes have the potential of correcting pipe problems and reducing the safety function unavailabilities due to pipe failures. Hence, changes in

inspection programs which normally lead to both enhancements and reductions to inspection scope and approach are limited to potential changes in failure frequency and rupture frequency, but do not directly change in any way the consequences of an assumed pipe failure.

Now when considering the possible range of impacts that changes in inspection programs could conceivably have on rupture frequencies, the current service experience that is summarized in the preface to our response to RAI F-1 (on EPRI RI-ISI Methodology on TR-106706 [18]), this range is in turn limited by the fact that pipe failures can be caused by degradation mechanisms, severe loading conditions, or some combination of these. The vast majority of severe loading condition failures such as vibration fatigue, water hammer, frozen pipes and human error are not amenable to mitigation by inspections that are geared to find damage produced by an active degradation mechanism. As shown in Figure F-D, complete elimination of all degradation type failure mechanisms would only reduce the historical plant level frequency of pipe ruptures by about a factor of four. Conversely, there is little evidence to support the notion that previous inspections have had a marked impact on observed failure and rupture frequencies [22]. This is true since current inspection are focused on locations where design basis stresses are the highest and not where pipe degradation is most likely to occur.

### Reasonable Balance Between Prevention and Mitigation

The application of the EPRI method maintains the balance between prevention and mitigation in the following respects. First, the risk matrix that is employed to characterize the safety significance is two-dimensional. As such the roles that segments play in rupture likelihood and consequences of assumed pipe ruptures are independently examined and considered. The scheme to assign elements of the matrix to defined high, medium and low safety significance in fact gives equal weight to consideration of rupture potential and consequence. Even if the rupture potential is low, the segment can still have a medium safety significance if the consequences of the pipe rupture, independently considered, are high. In fact this matrix approach does a much better job of preserving defense in depth than an approach based on risk importance measures. The Fussell-Vesely or risk reduction worth of a pipe segment can be made low if either the pipe rupture frequency or the pipe consequence are assessed to be sufficiently low. Also, if there are errors (or conservatisms) that understate (or overstate) either of these components the overall safety significance of the segment can be buried much more easily.

### Preservation of Redundancy, Independence and Diversity

Implementation of a RI-ISI using the EPRI approach should have no impact on available redundancy, independence and diversity of barriers. The role that consideration of degraded containment isolation and bypass protection play in the consequence analysis in the EPRI method ensures that the current barrier defense in depth is maintained. In fact when one considers that the Section XI method of prioritization (Class 1, Class 2, etc.) of pipe elements places no added emphasis on pipe segment that represent important containment barriers, a case could be made that a risk informed RI-ISI would improve the barrier defense in depth of the plant.

## Preservation of Common Cause Defenses

The most significant common cause issue associated with piping system reliability is the potential for spatial dependencies and consequential failures of systems and components resulting from piping failures and ruptures. Systematic evaluation of these effects is included in the consequence assessment. Full implementation of the EPRI methodology will ensure that the probability of common cause failures due to piping unreliability will be adequately considered in the risk informed inspection program.

## Defenses Against Human Errors

There is no apparent connection that we can identify between the proposed changes to a risk informed inspection program and the existing defenses against common cause and human errors beyond the observation that a risk-informed prioritization of pipe elements to inspect, which is not the case with ASME Section XI, offers a greater hope that risk significant common cause failures and human errors that come into play in the consequence assessment, will lead to an improved set of priorities for performing pipe inspections.

## Avoidance of Over Reliance on Programmatic Activities

The programmatic impacts of RI-ISI are rather limited. ASME code cases have been approved including N-560 and N-578, which can be viewed as a prelude to incorporation of risk-informed considerations into the ASME code. Eventually Section XI can be expected to be replaced with a risk informed process that will help bring about enhancements to the effectiveness of inspections. As indicated in other responses to these RAIs, it is highly questionable whether current ASME Section XI based inspection are significantly improving safety as these inspection are not finding appreciable numbers of flaws and hence their impact on lowering pipe leak and rupture frequencies may be suspect.

By integration of ASME and augmented inspections for FAC, IGSCC, MIC, etc. into a single risk-informed approach, we expect to achieve significant programmatic enhancement to the inspection programs. Hence, there is not an over-reliance on programmatic aspects in the defense in depth provisions of RI-ISI.

In summary, application of RI-ISI should if anything, enhance the defense in depth aspects of the inspection program. The EPRI approach to RI-ISI offers particular advantages in this area in that rupture frequency and consequences are independently assessed thereby creating a better balance between prevention and mitigation. The insights from application of RI-ISI about the balance between prevention and mitigation are actually more robust than available from results of existing PSAs, mainly because pipe ruptures in PSAs are limited to only a few selected locations in the reactor coolant system, main steam and feedwater systems, and the scope of the internal flooding analyses. The consideration of piping system failure modes and effects in a risk informed inspection program are more comprehensively considered and documented than typically found in most PSAs. If anything, RI-ISI programs should increase the ability to examine the balance between prevention and mitigation afforded by piping system integrity.

### *Maintenance of Safety Margins*

The only codes and standards that will impacted by implementation of RI-ISI according to the EPRI method will be the in-service inspection requirements of ASME Section XI. The technical basis for the EPRI approach to RI-ISI under review by the staff provides the technical justification for any deviations. Application of the approach will ensure that the risk impact of changes to the inspection program will associated with improvements to plant safety. Existing safety analyses will not be impacted by implementation of RI-ISI. If anything, the likelihood of a design basis LOCA event should be reduced as a result of RI-ISI.

### *Risk Impacts of Implementing RI-ISI*

EPRI Report TR-106706 documented the procedures for implementing RI-ISI on the EPRI pilot plants including Arkansas Nuclear One Unit 2 and the James A. Fitzpatrick plants. Since this interim report was published, the pilot studies have been completed, third party reviews were performed and supporting EPRI research has proceeded to examine technical issues associated with piping system reliability and service experience. In addition, there has been afforded an opportunity to address NRC's regulatory guidance on risk informed changes to the current licensing basis including risk informed inservice inspection programs [2,3,4,5]. As a result of these developments and in support of future RI-ISI applications that utilize the EPRI approach, a more complete and updated technical description of the procedures for RI-ISI are presented in this topical report.

The procedures presented in TR-106706 were developed to support the definition of a new risk informed in-service inspection program that would inherently result in a positive impact on plant safety while minimizing the need for extensive quantitative probabilistic evaluations that could be difficult to defend in the regulatory arena. The objective of the EPRI RI-ISI program is to reduce the costs and person-rem exposures associated with the program while enhancing the risk management benefits of the current ASME Section XI driven program. The capability to achieve this objective is provided by insights from service experience that include the view that the current ASME inspections have marginal benefit since they are largely de-coupled from currently understood characteristics of pipe failure mechanisms that have occurred in several thousand reactor years of service experience.

EPRI recognizes the need for future submittals to demonstrate that risk impacts are acceptable and in conformance with applicable guides and review plans for risk informed decision-making. To make this more clear for future applications, we have decided to enhance the description of the EPRI approach by adding an explicit step to the process for the user to demonstrate that the changes proposed in the risk informed inspection program have an acceptable risk impact as described in Section 3. In most applications, we believe that it will be obvious that a qualitative evaluation is sufficient to conclusively show this as permitted in Regulatory Guide 1.174. In Section 2.2.2 of that regulatory guide it is stated:

> The licensee's risk assessment may be used to address the principle that proposed increases in CDF and risk are small and are consistent with the intent of the NRC's Safety Goal Policy Statement. The necessary sophistication of the evaluation...depends on the contribution the risk assessment makes to the integrated decision making, which

> depends to some extent on the magnitude of the potential risk impact. For LB changes that may have a more substantial impact, an in-depth and comprehensive PSA analysis...will be necessary to provided adequate justification. In still others, a qualitative assessment of the impact of the LB change on the plant's risk may be sufficient.

While a simple qualitative assessment should be sufficient, there may be cases in which a quantitative bounding analysis or realistic quantitative analysis is necessary to demonstrate that risk impacts are acceptable. Alternatively, element selection may be adjusted to ensure that adverse risk impacts can be conclusively dismissed without the need for either realistic or bounding quantitative analysis. Quantitative analysis may be performed using methods and databases developed by EPRI that are discussed in Section 3.7.

The EPRI approach to RI-ISI is structured with the characteristic that no significant risk increases should be expected. In fact, for most applications we expect that strict adherence to the EPRI process for assignment of pipe segments to the risk matrix, inspection percentages, specific element selection criteria and implementation of an inspection for cause approach will result in reductions in pipe rupture frequencies and associated impacts in CDF and LERF. This characteristic holds for both variations of implementing the EPRI method in ASME Code Cases N-560 and N-578.

### *Monitoring Program*

This methodology is to be used by plant personnel to define the scope of a risk-informed piping inservice inspection program. This scope is defined by the piping segments (e.g., high, medium, and low risk segments), inspection elements locations, inspection methods, examination volumes, acceptance and evaluation criteria. Previous plant specific operating history and piping system inspection and service experience is a key input to the element selection process as explained in Section 3.4. The Licensee is expected to incorporate the results of these RI-ISI evaluation into plant specific program procedures that are consistent with the performance-based implementation and monitoring strategies specified in Regulatory Guide RG 1.174 and ASME Section XI. Hence there are no unique aspects of the EPRI method in so far as monitoring requirements are concerned.

## 6.2 Conformance with RG 1.178

Regulatory Guide, 1.178 [4], which was issued for trial use, organizes its guidance into four basic elements that are consistent with several risk informed applications in accordance with the general guidance in Regulatory Guide 1.174. The basic elements include:

Element 1: Define the proposed change to inservice inspection of piping

Element 2: Perform engineering analyses

Element 3: Develop implementation, performance-monitoring, and corrective action strategies

Element 4: Document evaluations and submit request for proposed change.

EPRI agrees with the guiding principles for RI-ISI set forth in this regulatory guide and appreciates that NRC has taken into account input from EPRI resulting from the reviews and public workshop on the draft guidance in DG-1063 [30]. To the best of our knowledge there are no conflicts between RG 1.178 and this report on the principles for a successful RI-ISI program.

As indicated in Table 6-1, the basic structure of the steps for implementing the EPRI approach to RI-ISI corresponds very well to the elements of RG 1.178. A more complete discussion of how implementation of the EPRI method is intended to address each of these elements is presented below.

**Table 6-1**
**Correspondence of RG 1.178 and Elements of EPRI RI-ISI Procedure**

| Element in RG 1.178 | Corresponding Elements of EPRI RI-ISI Approach | Sections in This Report for Technical Requirements |
|---|---|---|
| 1. Define Proposed Change | Definition of RI-ISI Program Scope | Sections 3.1 and 3.2 |
| 2. Perform Engineering Analyses | FMEA of Pipe Segments:<br>Consequence Evaluation<br>Failure Potential Evaluation<br>Risk Characterization<br>Element Selection<br>Evaluation of Risk Impacts | <br>Section 3.3<br>Section 3.4 and 4<br>Section 3.5<br>Section 3.6<br>Section 3.7 |
| 3. Develop Implementation, Monitoring and Corrective Actions | Long Term RI-ISI Program | Sections 3.6 and 4 |
| 4. Documentation | All above steps are documented | Section 5 |

### *6.2.1 Element 1: Define the Proposed Change to Inservice Inspection of Piping*

The NRC's expectations for this element are clearly defined in Section 3 of RG 1.178. There are no unique aspects of the EPRI method that suggest any need to deviate from these requirements. The requirements ensure that the scope of the RI-ISI program are clearly defined, a declaration that the intent of the NRC Commissioners Safety Goal Policy described in Section 1.1 of the guide are met, and that NRC needs to be notified if the basis for the approved RI-ISI program has changed.

### *6.2.2 Element 2: Perform Engineering Analyses*

This element covers both deterministic and probabilistic analyses that are performed to evaluate pipe segments and to support the determination that the proposed risk informed program meets NRC requirements for this application. Technical requirements for this element are discussed in Section 4 of RG 1.178.

The first part of this section deals with traditional analyses to assess compliance with applicable regulations, defense-in-depth and safety margins. Again, there is nothing unique in the EPRI approach that suggest any need to deviate from these requirements. Due to the nature of this application, it is not expected that this aspect of the evaluation will have an impact on the final form of the inspection program if the EPRI method is followed.

RG 1.174 provides for different approaches to define pipe segments. The range of acceptable approaches includes one based on consequences of pipe rupture as well as the EPRI method in which both consequences and failure potential are considered. Hence the EPRI approach to pipe segment definition meets the acceptable definitions in RG 1.178.

The NRC identifies several approaches that can be followed for evaluating the failure potential of pipe segments including data, fracture mechanics computer codes, and expert elicitation process. In EPRI's review of DG-1063, a number of alternative approaches that are being used by EPRI were proposed for inclusion.

As explained in Sections 1, 2, and 3, the approach to evaluating failure potential in the EPRI method is rooted in the evaluation of service data on pipe failures and engineering criteria developed by EPRI and others on the physical conditions needed for a spectrum of degradation mechanisms. In addition, EPRI has developed a database of piping system failure rates and rupture frequencies to obtain numerical estimates to the extent needed to implement the risk impact evaluation step of the methodology. One advantage of the EPRI method for this aspect of the evaluation is that 100 percent of the piping locations within the scope of the evaluation are assessed for failure potential, instead of selected locations that are judged to be limiting. Hence, EPRI believes that the current form (i.e. trial use) of the Regulatory Guide would find the EPRI method to be in conformance on this issue.

The requirements in Section 4.1 of RG 1.178 for consequence evaluation include the need to consider a full range of failure modes from leaks to full pipe breaks. This is fully consistent with the EPRI methodology as described in Section 3.3. Again, an advantage of the EPRI method is that 100 percent of the piping locations within the RI-ISI program scope are separately addressed in the consequence analysis.

The part of the requirements for PSA presented in Section 4.2, the NRC stresses the need for identifying areas where enhanced inspections could reduce risk as well as where relief could be justified for locations of low safety or risk significance. The EPRI method scores well on this criterion since the element selection process is focused on areas that would have the greater risk reduction benefits. In completed pilot applications of the EPRI method on ANO-2 and Vermont Yankee, it was confirmed through numerical before versus after "delta risk" evaluations that the net change in risk from RI-ISI was to decrease CDF and LERF.

The unique aspects of the EPRI method in the use of the PSA are that numerical estimates of pipe failure frequencies are not required for initial risk characterization of pipe segments, that many calculations of the PSA models are not required to support the consequence analyses, and the use of the EPRI risk matrix in lieu of risk importance analyses to rank the segment's risk significance. In view of the technical basis of this approach described in this topical report, EPRI believes that its approach to RI-ISI meets all the PSA requirements in Section 4 of RG 1.178.

### *6.2.3 Element 3: Develop Implementation, Performance-Monitoring, and Corrective Action Strategies*

Section 5 of RG 1.178 provides requirements for this element of an acceptable RI-ISI program. As discussed in response to NRC staff RAIs submitted in their review of EPRI TR-106706 [7], there are no unique aspects of the EPRI method that would suggest a need to depart from any of these requirements.

### *6.2.4 Element 4: Document Evaluations and Submit Request for Proposed Change*

Documentation requirements for the EPRI RI-ISI process, as discussed in Section 5 are consistent with the RG 1.178 requirements.

## 6.3 Continued Conformance with Applicable Codes and Standards

NRC provided an extensive set of questions and requests for additional information to EPRI based on their review of the RI-ISI procedures provided in EPRI TR-106706 [7]. These RAIs are found in reference [17] and the EPRI responses to these in reference [18]. Many of the technical issues raised in the RAIs were issues that were being investigated in the pilots with the expectation that refinements to the methodology would be made to incorporate the lessons learned. A comprehensive response to these RAIs were submitted for the public record that provided many technical details that were not included in TR-106706. Key elements of those RAI responses have been incorporated into this topical report and its supporting references. In addition to these written responses EPRI conducted a number of meetings with the NRC staff to discuss this approach to RI-ISI both on a generic basis and with respect to specific pilot plant applications including two that have already been approved for use, one at Vermont Yankee who has implemented ASME Code Case N-560 and another at ANO-2 who has implemented N-578. Through these reviews and interactions with the NRC, EPRI is confident that future submittals using the EPRI method will be found to be in conformance with NRC expectation as reflected in RG 1.178 and RG 1.174.

As stated earlier, in the near term it is expected that licensees will utilize the templates discussed in Section 5.2. These templates require licensees to identify any deviation from the methodology as well as changes to the licensing basis.

## 6.4 Relief Requests

Relief requests pertaining to limited examination coverage of piping elements will be subject to the following requirements.

1. An existing relief request is no longer required if the piping element is not a RI-ISI selection. Such relief requests shall be formally withdrawn by the licensee.

2. An existing relief request is unaffected if the piping element is a RI-ISI selection and the examination volume remains unchanged.

3. An existing relief request may require modification if the piping element is a RI-ISI selection and the examination volume has been expanded (e.g., thermal fatigue).

4. A new relief request will be generated for any RI-ISI piping element selection for which greater than 90 percent examination coverage is not achieved.

Consistent with the requirements of Code Case N-460 [60], an examination will be considered limited if less than or equal to 90 percent coverage is obtained.

Accessibility is an important consideration in the element selection process. As such, locations will generally be selected for examination where the desired coverage is achievable. However, some limitations will not be known until the examination is performed, since some locations will be examined for the first time.

In addition, other considerations may take precedence and dictate the selection of locations where greater than 90 percent examination coverage is physically impossible. This is especially true for RI-ISI element selections in risk categories 1, 2, 3 and 5. For these risk categories, elements are generally selected for examination on the basis of predicted degradation severity. For example, in the ECCS injection lines of PWRs the piping section immediately upstream of the first isolation check valve is considered susceptible to IGSCC, assuming a sufficiently high temperature and oxygenated water supply. The piping element (pipe-to-valve weld) located nearest the heat source will be subjected to the highest temperature (conduction heating). As such, this location will generally be selected for examination since it is considered more susceptible than locations further removed from the heat source, even though a pipe-to-valve weld is inherently more difficult to examine and obtain full coverage on than most other configurations (e.g., pipe-to-elbow weld). In this example, less than 90 percent coverage of this location will yield far more valuable information than 100 percent coverage of a less susceptible location. These types of risk insights will be documented in the basis for relief.

For risk category 4, element selections are focused on terminal ends and structural discontinuity locations of high stress and/or high fatigue usage in the absence of any identified damage mechanisms. In these cases, a greater degree of flexibility exists in choosing inspection locations. As such, if at the time of examination a RI-ISI element selection is found to be obstructed, a more suitable location should be substituted instead.

It should be noted that if an existing ASME Section XI inspection location is partially examined and continues to be partially examined in the RI-ISI process, the amount of risk addressed by examination remains the same for that location. If a new RI-ISI inspection location is only partially examined, but was not previously required to be examined by Section XI, then the amount of risk addressed by examination of that location is still increased. It is not necessarily true that because you reduce examination totals, that a complete examination must be performed at the RI-ISI selected locations to maintain risk neutrality or improvement in the program. The impact of partial examinations on the overall risk contribution may be assessed and included in the basis for relief.

## 6.5 Other Inspection Programs and Activities

Licensees have a number of inspection programs beyond their Section XI programs. Many of these programs are licensee commitments to the NRC while others are a result of plant specific experiences and good practice initiatives. The philosophy of integrating inspection programs outside the scope of Section XI is summarized in Table 6-2 and described as follows:

### *IGSCC in BWRs*

NUREG-0313 [37]"category A" piping welds are considered resistant to IGSCC and as such are assigned to the low failure potential category. The risk ranking for these locations will be a function of its consequence of failure and element selection (e.g. number of inspections) will be consistent with its risk ranking (e.g. risk category 2 vs. risk category 4). All other NUREG-0313 weld categories (e.g. "category D") will be inspected per the plant's response to Generic Letter 88-01 [36, 58].

### *IGSCC in PWRs*

A number of plant inspection programs include augmented examinations performed in response to NRC Bulletin 79-17, "Pipe Cracks in Stagnant Borated Water Systems at PWR Plants" [62]. The EPRI RI-ISI process defines an explicit set of attributes that must be considered in assessing the potential susceptibility of a location to IGSCC for PWRs. The IGSCC concern identified by this document were inputs considered in the development of the EPRI degradation mechanism criteria. As such, this concern is explicitly considered in the application of the EPRI RI-ISI process. Consequently, the EPRI RI-ISI program may subsume this augmented inspection program.

### *Flow Assisted Corrosion (FAC)*

These location shall be identified and inspected in accordance with the plant's response to Generic Letter 89-08 [50], "Erosion/Corrosion-Induced Pipe Wall Thinning." Therefore, the EPRI RI-ISI program does not subsume this augmented inspection program.

### *Microbiological Influenced Corrosion (MIC)*

This report has been written to provide licensees with alternatives for identifying those locations most susceptible to degradation and the appropriate number, location and frequency for inspection. Reference; Generic Letter 89-13 [56], "Service Water System Problems Affecting Safety-Related Equipment." Therefore, the EPRI RI-ISI program may subsume this augmented inspection program.

### *Thermal Fatigue*

A number of plant inspection programs include augmented examinations performed in response to NRC Bulletins 88-08, "Thermal Stresses in Piping Connected to Reactor Coolant Systems," and 88-11, "Pressurizer Surge Line Thermal Stratification" [64] and Information Notice 93-020, Thermal Fatigue Cracking of Feedwater Piping to Steam Generators" [65]. The EPRI RI-ISI process defines an explicit set of attributes that must be considered in assessing the potential susceptibility of a location to thermal fatigue. The thermal fatigue concerns identified by these documents were inputs considered in the development of the EPRI degradation mechanism criteria. As such, this concern is explicitly considered in the application of the EPRI RI-ISI process. Consequently, the RI-ISI program may subsume this augmented inspection program.

At this time only the aforementioned changes to inspection programs outside the scope of Section XI are considered in the EPRI RI-ISI process. However, the industry and the NRC are continuing work on piping integrity issues (e.g. NUREG-0313, BWRVIP results and operating experience [61]). It is EPRI's intent to keep the methodology current with industry and NRC interactions.

Any changes to a plant's licensing basis as a result of the above will need to be identified as part of the follow-on plant process and the licensee must assure appropriate notification consistent with existing plant processes.

**Table 6-2**
**Augmented Inspection Programs & Their Relationship to EPRI's RI-ISI Methodology**

Thermal Fatigue

| ISSUE | Integration into RI-ISI Program * |
|---|---|
| NUREG –0313, Rev 2 (IGSCC in BWRs) [47] | Currently limited to Category A welds only |
| NRC Bulletin 88-08, "Thermal Stresses in Piping Connected to RCS" [63] | Yes, specifically addressed by thermal fatigue evaluation |
| NRC Bulletin 88-11, "Pressurizer Surge Line Stratification" [64] | Yes, specifically addressed by thermal fatigue evaluation |
| NRC Information Notice 93-020, "Thermal Fatigue Cracking of Feedwater Piping to Steam Generators" [65] | Yes, specifically addressed by thermal fatigue evaluation |
| IE Bulletin 79-17, Pipe Cracks in Stagnant Borated Water Systems at PWR Plants [62] | Yes, specifically addressed by stress corrosion cracking evaluation |
| Service Water Integrity Program (G.L. 89-13) [56] | Yes, specifically addressed by localized corrosion evaluation |
| Flow Accelerated Corrosion (G.L. 89-08) [50] | No change to the number, type or frequency of inspection |

* - Each of these augmented programs may be integrated with the RI-ISI program at the discretion of the licensee. However, regardless of the above, revision to licensing commitments and appropriate notification needs to be conducted by individual licensees.

# 7
# REFERENCES


1. ASME Boiler and Pressure Vessel Code, Section XI, Division 1, American Society of Mechanical Engineers, N. Y., 1989.

2. Regulatory Guide 1.174, "An Approach for Using Probabilistic Risk Assessment in Risk-Informed Decisions on Plant Specific Changes to the Current Licensing Basis," U.S. Nuclear Regulatory Commission, January 1998.

3. Standard Review Plan, Chapter 19, "Use of Probabilistic Risk Assessment in Plant Specific, Risk-Informed Decision Making: General Guidance," U.S. Nuclear Regulatory Commission, January 1998.

4. Regulatory Guide 1.178 (For Trial Use), "An Approach for Plant Specific, Risk-Informed Decision Making: Inservice Inspection of Piping," U.S. Nuclear Regulatory Commission, May 1998.

5. Standard Review Plan, Chapter 3.9.8, "Standard Review Plan for Trial Use for the Review of Risk-Informed Inservice Inspection of Piping," May 1998.

6. Westinghouse Energy Systems, "Westinghouse Owners Group Application of Risk-Informed Methods to Piping Inservice Inspection Topical Report," WCAP-14572, Revision 1-NP-A, February 1999.

7. *Risk-Informed Inservice Inspection Evaluation Procedure,* EPRI, Palo Alto, CA: 1996. Report No. TR-106706.

8. *Application of the EPRI Risk Informed Inservice Inspection Evaluation Procedure,* EPRI, Palo Alto, CA: 1997. Report No. TR-107530.

9. ANO-2 Code Case N578 Application Submittals, Letter #2CAN099706 dated September 30, 1997 and Letter #2CANO39808 dated March 31, 1998.

10. *Application of EPRI Risk Informed Inservice Inspection Guidelines to CE Plants,* EPRI, Palo Alto, CA: 1997. Report No. TR-107531.

11. American Society of Mechanical Engineers, "Case N-560, Alternative Examination Requirements for Class 1, B-J Piping Welds, Section XI, Division 1," August 9, 1996.

12. American Society of Mechanical Engineers, "Case N-577, Risk Informed Requirements for Class 1, 2, and 3 Piping, Method A, Section XI, Division 1," September 2, 1997.

13. American Society of Mechanical Engineers, "Case N-578, Risk Informed Requirements for Class 1, 2, and 3 Piping, Method B, Section XI, Division 1," September 2, 1997.

14. Vermont Yankee Code Case N-560 Application Submittals Letter # BVY97-99, dated August 6, 1997 and Letter #BVY97-105 dated August 15, 1997.

15. NRC Letter to Vermont Yankee, "Request to Use Code Case N-560 As An Alternative To The Requirements Of ASME Code, Section XI, Table IWB-2500-1 At Vermont Yankee Nuclear Power Station)" dated November 9, 1998.

16. NRC Letter to Entergy Operations, "Request to Use a Risk-Informed Alternative To The Requirements Of ASME Code, Section XI, Table IWX-2500 At Arkansas Nuclear One, Unit 2," dated December 29, 1998.

17. Letter from Brian Sheron, USNRC to Anthony Pietrangelo, NEI, "Comments and Request for Additional Information Related to Electric Power research Institute Risk-Informed Inservice Inspection Evaluation Procedure for Piping," June 12, 1997.

18. Letter from J. Mitman, EPRI to Brian Sheron, USNRC, "Response to Request for Additional Information Related to Electric Power research Institute Risk-Informed Inservice Inspection Evaluation Procedure for Piping," November 13, 1998.

19. Fleming, K. N., et al, "Independent Review of EPRI Risk Informed Inservice Inspection Procedure," Prepared by ERIN® Engineering and Research, Inc. for EPRI, July 1996.

20. Cofie, N. G., et al, "Review of Degradation Mechanisms in EPRI Risk Informed Inservice Evaluation Procedure," Report No. SIR-96-097, Prepared by Structural Integrity Associates, Inc. for EPRI, November 1996.

21. *PSA Applications Guide,* EPRI, Palo Alto, CA: 1995. EPRI TR-105396.

22. *Evaluation of Pipe Failure Via Degradation Mechanism Assessment,* EPRI, Palo Alto, CA: 1998. TR-110157.

23. *Piping System Reliability and Failure Rate Estimation Models for Use in Risk Informed Inservice Inspection Applications,* EPRI, Palo Alto, CA: 1998. TR-110161.

24. *Piping System Failure Rates and Rupture Frequencies for Use in Risk Informed Inservice Inspection Applications,* EPRI, Palo Alto, CA: 1999. TR-111880.

25. *Nuclear Reactor Piping Failures at US Commercial LWRs 1961-1997,* EPRI, Palo Alto, CA: and Swedish Nuclear Power Inspectorate: 1998. TR-110102

26. Vermont Yankee Response to USNRC Request for Additional Information Set #1 dated November 1997, Set #2 dated July 1998.

27. *Piping Failures in U.S. Commercial Nuclear Power Plants,* EPRI, Palo Alto, CA: 1992. TR-100380.

28. *Piping Failures in U.S. Commercial Nuclear Power Plants,* EPRI, Palo Alto, CA: 1993. TR-102266.

29. Bush, S. H., et al, Piping Failures in the United States Nuclear Power Plants: 1961-1995, SKI Report 96:20, January 1996.

30. USNRC, Draft Regulatory Guide 1063, "An Approach for Plant-Specific, Risk-Informed Decisionmaking: Inservice Inspection of Piping Reference," October 1997.

31. Letter from Joe Gillman, EPRI to Chief, Rules Review and Directives Branch USNRC, "Comments on Draft Regulatory Guide DG-1063 and Draft SRP Chapter 3.9.8 Dealing With Risk-Informed In-service Inspection of Piping Systems," January 12, 1998.

32. American Society of Mechanical Engineers, "Risk-Based Inspection - Development of Guidelines, Volume 2, Light Water Reactor (LWR) Nuclear Power Plant Components," ASME Research Task Force on Risk-Based Inspection Guidelines, Washington, D.C., 1992.

33. Kulat, S., Riccardella, P., and Fougerousse, R., "Evaluation of Inservice Inspection Requirements for Class 1, Category B-J Pressure Retaining Welds in Piping," ASME Section XI Task Group on ISI Optimization, Report No. 92-01-01, July 1995.

34. *EPRI Fatigue Management Handbook,* EPRI, Palo Alto, CA: 1994. TR-104534.

35. *PWSCC of Alloy 600 Materials in PWR Primary System Penetrations,* EPRI, Palo Alto, CA: 1994. TR-103696.

36. Miraglia, F. J. Jr., NRC Position on IGSCC in BWR Austenitic Stainless Steel Piping (Generic Letter 88-01),U.S. Nuclear Regulatory Commission, January 1988.

37. Hazelton and Koo, Technical Report on Material Selection and Processing Guidelines for BWR Coolant Pressure Boundary Piping, NUREG-0313, Rev. 2, U.S. Nuclear Regulatory Commission, Washington, D.C., January 1988.

38. *Service Water System Corrosion and Deposition Sourcebook,* EPRI, Palo Alto, CA: 1993. TR-103403.

39. *Sourcebook for Microbiologically Influenced Corrosion in Nuclear Power Plants,* EPRI, Palo Alto, CA: 1988. NP-5580.

40. *Detection and Control of Microbiologically Influenced Corrosion - An Extension of the Sourcebook for Microbiologically Influenced Corrosion,* EPRI, Palo Alto, CA: 1990. NP-6815.

41. *A Method to Predict Cavitation and the Extent of Damage in Power Plant Piping,* EPRI, Palo Alto, CA: 1993.

42. *Recommendations for an Effective Flow-Accelerated Corrosion Program,* EPRI, Palo Alto, CA: 1993. NSAC-201L.

43. A. Mosleh, et al, "Procedures for Treating Common Cause Failure in Safety and Reliability Studies," NUREG/CR-4780, EPRI NP-5613, January 1988.

44. Kulat, S., Riccardella, P., and Fougerousse, R., "Evaluation of Inservice Inspection Requirements for Class 1, Category B-J Pressure Retaining Welds in Piping," ASME Section XI Task Group on ISI Optimization, Report No. 92-01-01, July 1995.

45. ANO-1 Code Case N-560 Application Submittal, Letter #1CAN069804 dated June 3, 1998.

46. Miraglia, F. J. Jr., "NRC Position on IGSCC in BWR Austenitic Stainless Steel Piping (Generic Letter 88-01)," U.S. Nuclear Regulatory Commission, January 1988.

47. Hazelton and Koo, "Technical Report on Material Selection and Processing Guidelines for BWR Coolant Pressure Boundary Piping," NUREG-0313, Rev. 2, U.S. Nuclear Regulatory Commission, Washington, D.C., January 1988.

48. NRC/BWRVIP Meeting on NUREG-0313, Rev. 2 dated March 16, 1999.

49. *"Use of Risk-Informed Inspection Methodology for BWR Class 1 Piping,"* EPRI, Palo Alto, CA: 1998. EPRI TR-110701.

50. U.S. NRC Generic Letter 89-08, "Erosion/Corrosion-Induced Pipe Wall Thinning."

51. Thomas, H. M., "Pipe and Vessel Failure Probability," Reliability Engineering 2, Applied Science Publishers Ltd., England, 1981.

52. Gamble, R. M., and Tagart, S. W. Jr., "A Method To Assign Failure Rates for Piping Reliability Assessments," PVP-Vol. 215, American Society of Mechanical Engineers, N.Y. 1992.

53. Gosselin, S. R., and Gamble, R. M., "A Method To Assign Failure Rates For Piping Integrity Assessments," 1996 ASME/ICPVT Pressure Vessel and Piping Conference, July 21-26, 1996.

54. U.S. NRC NUREG/BR-0058, Regulatory Analysis Guidelines of the U.S. Nuclear Regulatory Commission.

55. U.S. NRC NUREG/BR-0184, Regulatory Analysis Guidelines Technical Evaluation Handbook, 1997.

56. U.S. NRC Generic Letter 89-13, "Service Water System Problems Affecting Safety-Related Equipment," April 4, 1980.

57. NEI Letter to NEI Administrative Points of Contact, "Risk-Informed Inservice Inspection (ISI)," dated March 9, 1999.

58. U.S. NRC Generic Letter 88-01, Supplement 1, "NRC Position on IGSCC in BWR Austenitic Stainless Steel Piping," February 4, 1992.

59. Generic Letter 90-05, "Guidance for Performing Temporary Non-Code Repair of ASME Code Class 1, 2 and 3 Piping."

60. American Society of Mechanical Engineers, "Case N-460, Alternative Examination Coverage for Class 1 and Class 2 Welds, Section XI, Division 1," July 27, 1988.

61. *BWR Vessel and Internals Project Technical Basis for Revision to Generic Letter 88-01 Inspection Schedules (BWRUIP-75)*, EPRI Palo Alto, CA and BWRUIP: 1999. TR-113932.

62. U.S. NRC IE Bulletin 79-17, "Pipe Cracks in Stagnant Borated Water Systems at PWR Plants," July 26, 1979.

63. U.S. NRC Bulletin 88-08, "Thermal Stresses in Piping Connected to the Reactor Coolant Systems," June 22, 1988.

64. U.S. NRC Bulletin 88-11, "Pressurizer Surge Line Thermal Stratification," December 20, 1988.

65. U.S. NRC Information Notice, "Thermal Fatigue Cracking of Feedwater Piping to Steam Generators," March 24, 1993.

# A
# ACRONYMS AND ABBREVIATIONS

| | |
|---|---|
| AFW | Auxiliary feedwater |
| ALARA | As low as reasonably achievable |
| ANO | Arkansas Nuclear One |
| AOT | Allowed outage time |
| APP R | Appendix R |
| ASME | American Society of Mechanical Engineers |
| BWR | Boiling water reactor |
| CC | Crevice cracking |
| CCDP | Conditional core damage probability |
| CDF | Core damage frequency |
| CFR | Code of federal regulation |
| CLERP | Conditional large early release probability |
| CS | Carbon steel |
| DB | Design basis |
| dB | Decibels |
| DM | Degradation mechanism |
| E-C | Erosion-cavitation |
| E/C | Erosion/corrosion |
| ECCS | Emergency core cooling system |
| ECSCC | External chloride stress corrosion cracking |
| EFW | Emergency feedwater |
| FAC | Flow-accelerated corrosion |
| FMECA | Failure modes and effects criticality analysis |
| FS | Flow Sensitive |
| FSAR | Final safety analysis report |
| FWLB | Feedwater line break |
| HAZ | Heat-affected zone |
| HELB | High-energy line break |
| HEP | Human error probability |
| HPSI | High pressure safety injection |
| HRA | Human reliability analysis |
| IE | Initiating event |
| IGSCC | Intergranular stress corrosion cracking |
| IPE | Individual plant examination |

| | |
|---|---|
| IPEEE | Individual plant examination - external events |
| ISI | Inservice inspection |
| LCO | Limiting condition for operation |
| LERF | Large early release frequency |
| LLB | Leak before break |
| LLOCA | Large loss of coolant accident |
| LOCA | Loss of coolant accident |
| LOSP | Loss of off-site power |
| MELB | Medium energy line break |
| MFW | Main feedwater |
| MHz | Megahertz |
| MIC | Microbiologically influenced corrosion |
| MLOCA | Medium loss of coolant accident |
| NDE | Nondestructive examination |
| NEI | Nuclear Energy Institute |
| NPS | Nominal pipe size |
| NRC | Nuclear Regulatory Commission |
| NTU | Nephelometric turbidity units |
| NWT | Nominal wall thickness |
| P&IDs | Pipe and instrumentation drawings |
| PBF | Pressure boundary failure |
| PDI | Performance demonstration initiative |
| PIT | Pitting |
| POD | Probability of detection |
| ppm | Parts per million |
| PRA | Probabilistic risk assessment |
| PSI | Preservice Inspection |
| PWR | Pressurized water reactor |
| PWSCC | Primary water stress corrosion cracking |
| RAI | Request for additional information |
| RAW | Risk Achievement Worth |
| RCS | Reactor coolant system |
| RHR | Residual heat removal |
| Ri | Richardson number |
| RI-ISI | Risk-informed inservice inspection |
| RRW | Risk reduction worth |
| RT | Radiographic testing |
| SCC | Stress corrosion cracking |
| SLB | Steamline break |
| SLOCA | Small loss of coolant accident |
| SRA | Structural reliability analysis |
| SS | Stainless steel (austenitic) |

| | |
|---|---|
| SWS | Service water system |
| TASCS | Thermal stratification cycling and striping |
| TDS | Total dissolved solids |
| TOFD | Time of flight diffraction |
| TF | Thermal fatigue |
| TGSCC | Transgranular stress corrosion cracking |
| TRO | Total residual oxidant |
| UT | Ultrasonic test |

# B
# GLOSSARY

AVAILABILITY. The probability that a component or system will perform a specified function or mission under given conditions at a required time.

BACKUP SYSTEM. See mitigating system.

CONSEQUENCE. The impact or the ultimate result of an event. Consequences can be measured in terms of impact on public health and safety, impact on the environment, and cost or damage to the facility. Consequence measures typically considered in the nuclear industry are core damage frequency and magnitude of release (source term).

CONTAINMENT BYPASS. Events that lead to a direct release of radioactive material to the environment bypassing the containment boundary.

CONTAINMENT ISOLATION FAILURE. The containment failure mode that results from a failure to isolate all lines that penetrate the containment.

CORE DAMAGE FREQUENCY. An estimated frequency of occurrence of events leading to core damage.

CORE DAMAGE. Uncovery and heatup of the reactor core to the point where damage to reactor fuel elements or cladding is anticipated.

DAMAGE MECHANISM. See degradation mechanism.

DEGRADATION MECHANISM. Phenomena or process that attacks (wear, cracking, etc.) the pressure-retaining material and might result in a reduction of component pressure boundary integrity.

ELEMENT. See piping element.

EXTERNAL EVENT. An event that initiates outside of plant systems and results in the perturbation of steady-state plant operation (e.g., seismic event, tornado, etc.).

FAILURE MODES, EFFECTS, AND CRITICALITY ANALYSIS (FMECA). A detailed technique specifically designed to identify the failure modes of an analyzed component, the impacts of the failure on operations, the system and surrounding components, and controls for limiting the likelihood of such failures.

INITIATING EVENT. An event that perturbs steady-state plant operation or normal shutdown evolution resulting in a plant transient and challenge to control and safety systems. Based on its origin, an initiating event can be an internal or external event.

INSERVICE INSPECTION (ISI). An inspection performed after preservice inspections and test runs are satisfactorily completed and the system or component has been certified or accepted for normal service operation. The objective of such inspections is to detect degradation that might have occurred during plant operation.

INSPECTION ELEMENT. Those piping elements subjected to inspection/examination.

INSPECTION LOCATION. See inspection element.

INTERFACING SYSTEMS LOCA (ISLOCA). A breach in a system that interfaces with the reactor coolant system (RCS) and could cause a loss of coolant accident, if the breach is not isolated from the RCS. Such a breach could be caused if valves fail to isolate the RCS from an interfacing system not designed for the higher RCS pressure. When portions of an interfacing system are located outside the containment, ISLOCA can result in a radioactive release that bypasses the containment. Those ISLOCAs are referred to as a V-sequence.

INSPECTION LOCATION. An element in a risk-significant pipe segment and, therefore, a potential candidate for inspection.

INTERNAL EVENT. An event that initiates within plant systems and results in the perturbation of steady-state plant operation (e.g., loss of coolant, loss of heat sink, etc.).

LIKELIHOOD. Probability or frequency of an event. In this analysis, likelihood is defined as the expected frequency in events per unit time.

LOCATION. See piping element.

MITIGATING SYSTEM. Any plant system whose operation is required to mitigate consequences of an initiating event or plant transient. If one of the mitigating systems is disabled, remaining mitigating systems are referred to as backup systems.

PIPING COMPONENT. Piping or pipe fitting between adjacent welds.

PIPING ELEMENT. A portion of or a complete pipe segment. If a segment consists of one weld then the element and segment are identical. For segments that contain multiple elements, an element will consist of a portion of a straight length of pipe, weld, elbow, fitting, joint, etc., within the pipe segment.

PIPING SEGMENT. Continuous length of piping with the same degradation mechanism and failure consequence.

PIPING SYSTEM. An assembly of piping segments. The system has defined functions, as described in the plant FSAR and controlled drawings. A piping system might include one or more ASME Code classes.

PRESSURE BOUNDARY FAILURE. Piping element failures involving ruptures or leakage that result in a reduction or loss of the element pressure-retaining capability.

PROBABILISTIC RISK ASSESSMENT (PRA). A quantitative assessment of risk. For nuclear power plant application, the risk is associated with plant operation and maintenance. Risk is measured in terms of the frequency of occurrence of various events, leading to a consequence of interest (e.g., core damage or release of radioactive material).

PROBABILISTIC SAFETY ASSESSMENT (PSA). See probabilistic risk assessment.

PROBABILITY. A numerical measure of the state of confidence about the outcome of an event.

RECOVERY ACTION. An operator action performed to mitigate or reduce the consequences of an event.

RISK. A measure of the potential for loss or damage. The risk of an event encompasses the expected frequency (the number of events per unit time) and expected damage (the magnitude of a consequence).

SEGMENTS. See piping segment.

SPATIAL EFFECTS. The indirect impact of an event affecting other systems and components in the spatial vicinity. These effects include flooding, spray, pipe whip, jet impingement, etc.

V SEQUENCE. See interfacing system LOCA (ISLOCA).

*Target:*
Nuclear Power

## About EPRI

EPRI creates science and technology solutions for the global energy and energy services industry. U.S. electric utilities established the Electric Power Research Institute in 1973 as a nonprofit research consortium for the benefit of utility members, their customers, and society. Now known simply as EPRI, the company provides a wide range of innovative products and services to more than 1000 energy-related organizations in 40 countries. EPRI's multidisciplinary team of scientists and engineers draws on a worldwide network of technical and business expertise to help solve today's toughest energy and environmental problems.

EPRI. Powering Progress

© 1999 Electric Power Research Institute (EPRI), Inc. All rights reserved. Electric Power Research Institute and EPRI are registered service marks of the Electric Power Research Institute, Inc.
EPRI. POWERING PROGRESS is a service mark of the Electric Power Research Institute, Inc.

*Printed on recycled paper in the United States of America*

TR-112657, Rev. B-A

EPRI • 3412 Hillview Avenue, Palo Alto, California 94304 • PO Box 10412, Palo Alto, California 94303 • USA
800.313.3774 • 650.855.2121 • askepri@epri.com • www.epri.com