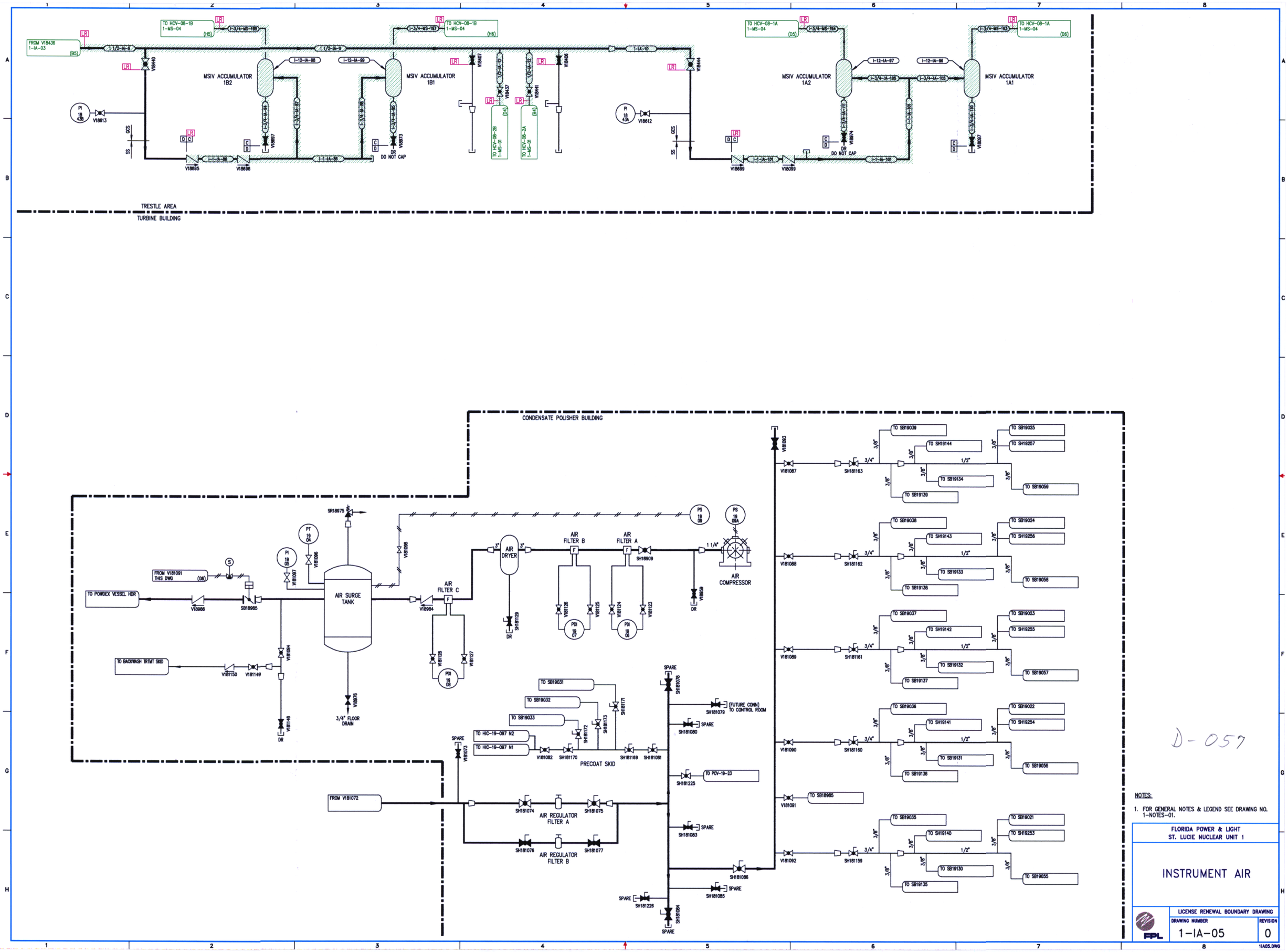
TRESTLE AREA
TURBINE BUILDING
CONDENSATE POLISHER BUILDING
MSIV ACCUMULATOR 1B2
MSIV ACCUMULATOR 1B1
MSIV ACCUMULATOR 1A2
MSIV ACCUMULATOR 1A1
AIR SURGE TANK
AIR DRYER
AIR FILTER A
AIR FILTER B
AIR FILTER C
AIR COMPRESSOR
PRECOAT SKID
AIR REGULATOR FILTER A
AIR REGULATOR FILTER B
3/4" FLOOR DRAIN
TO POWDEX VESSEL HDR
TO BACKWASH TRTMT SKID
FROM V181072
D-057
NOTES:
1. FOR GENERAL NOTES & LEGEND SEE DRAWING NO. 1-NOTES-01.
FLORIDA POWER & LIGHT
ST. LUCIE NUCLEAR UNIT 1
INSTRUMENT AIR
LICENSE RENEWAL BOUNDARY DRAWING
DRAWING NUMBER
1-IA-05
REVISION
0
1IA05.DWG