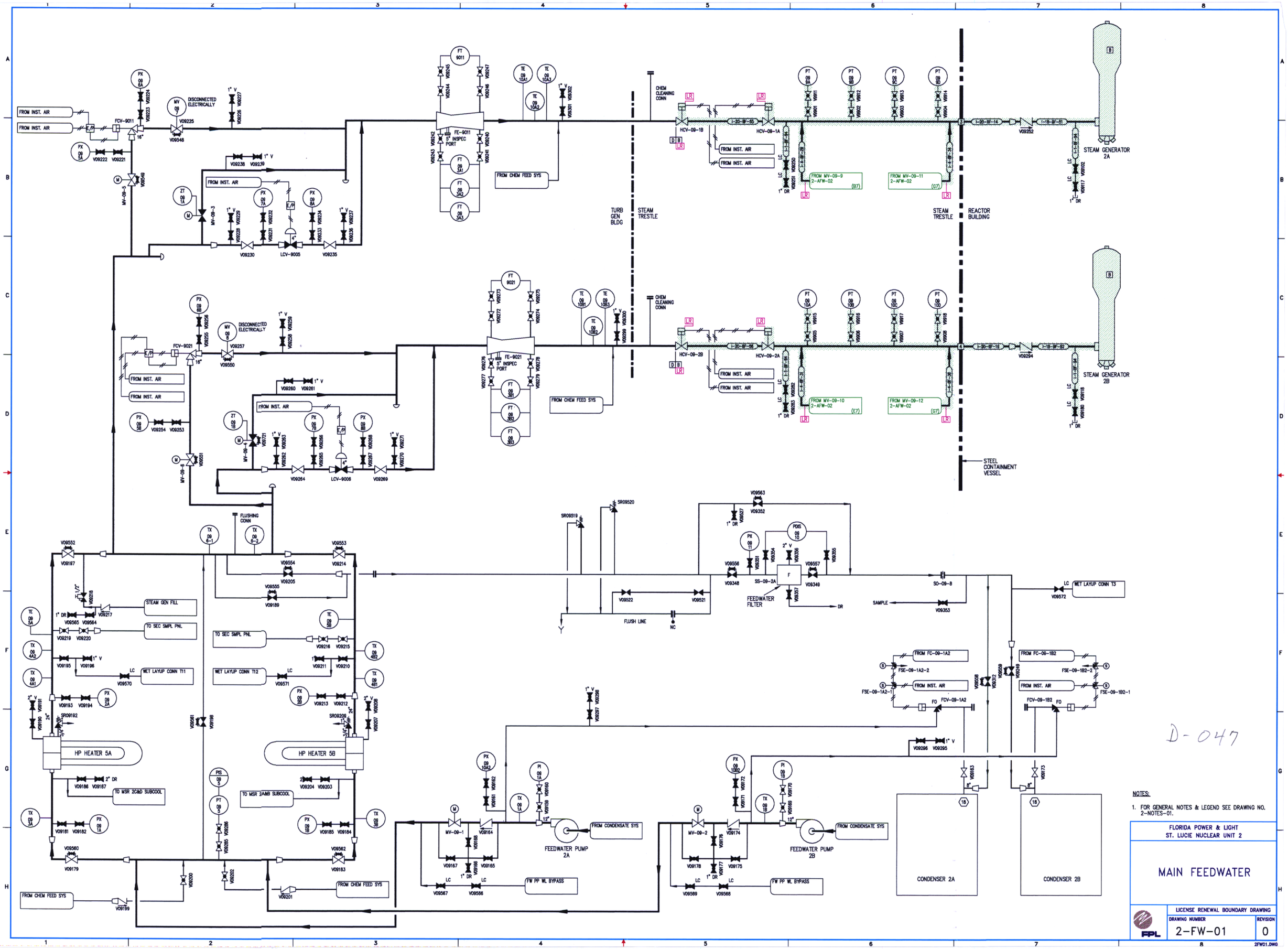

D-047

NOTES:

1. FOR GENERAL NOTES & LEGEND SEE DRAWING NO. 2-NOTES-01.

FLORIDA POWER & LIGHT
ST. LUCIE NUCLEAR UNIT 2

MAIN FEEDWATER

LICENSE RENEWAL BOUNDARY DRAWING

DRAWING NUMBER	REVISION
2-FW-01	0

2FW01.DWG