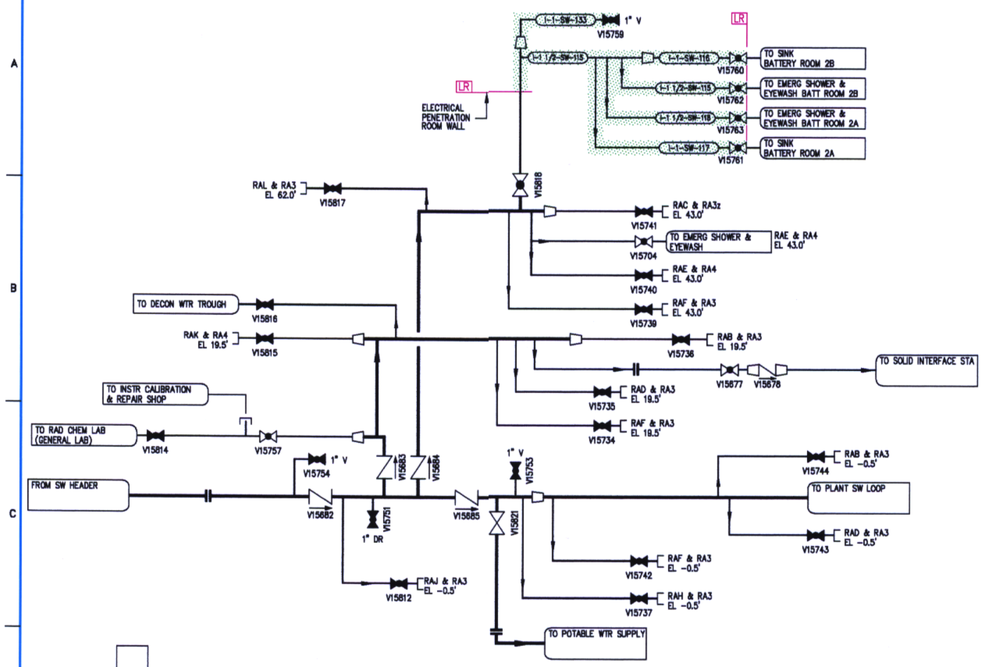

REACTOR AUXILIARY BUILDING SERVICE WATER SYSTEM

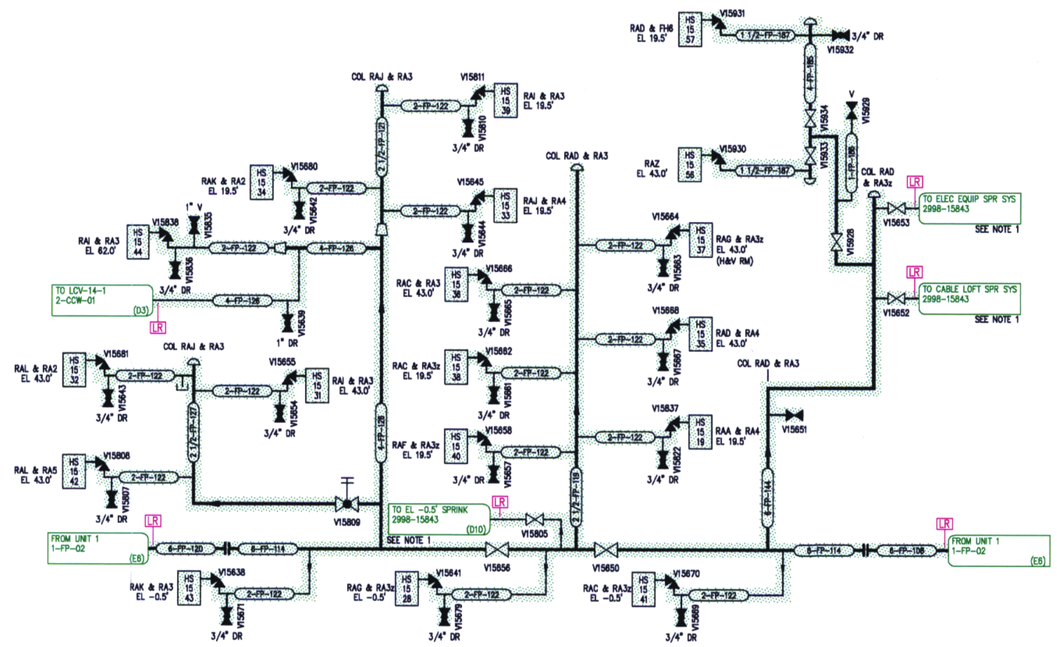

REACTOR AUXILIARY BUILDING FIRE PROTECTION SYSTEM

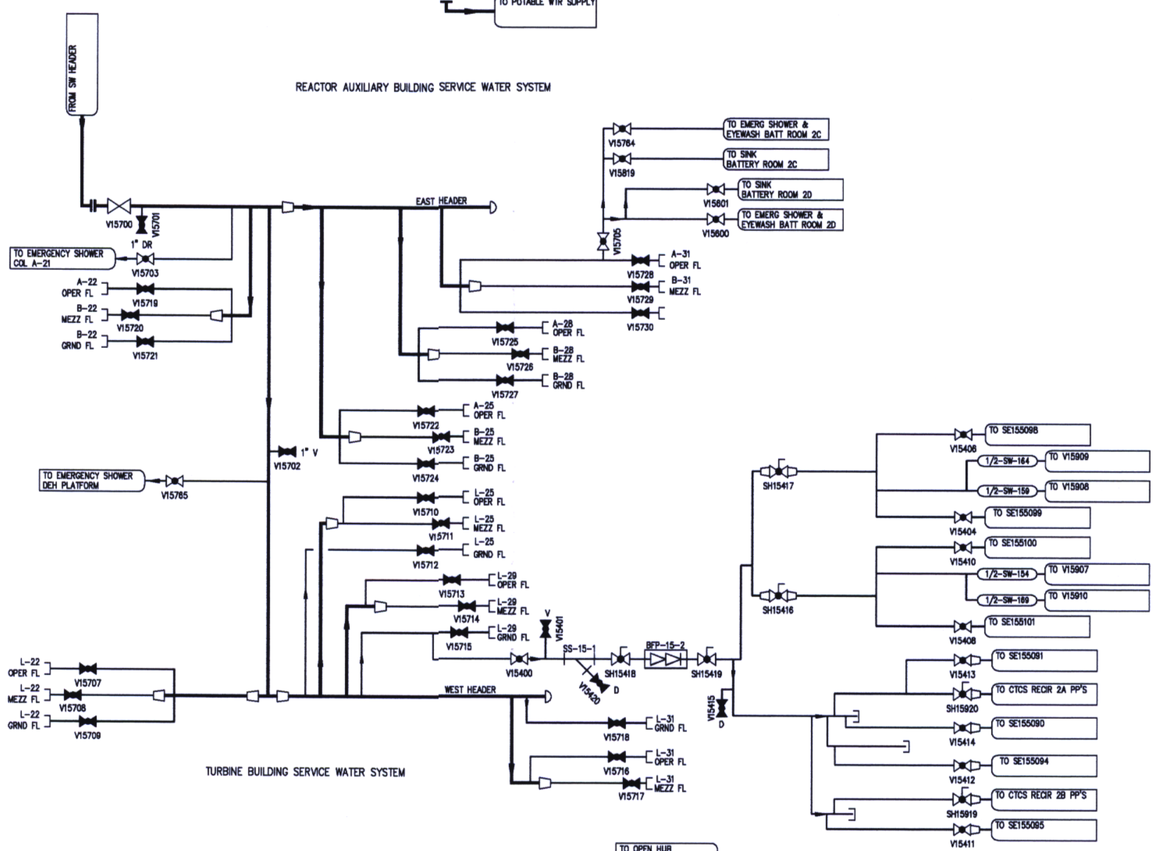

TURBINE BUILDING SERVICE WATER SYSTEM

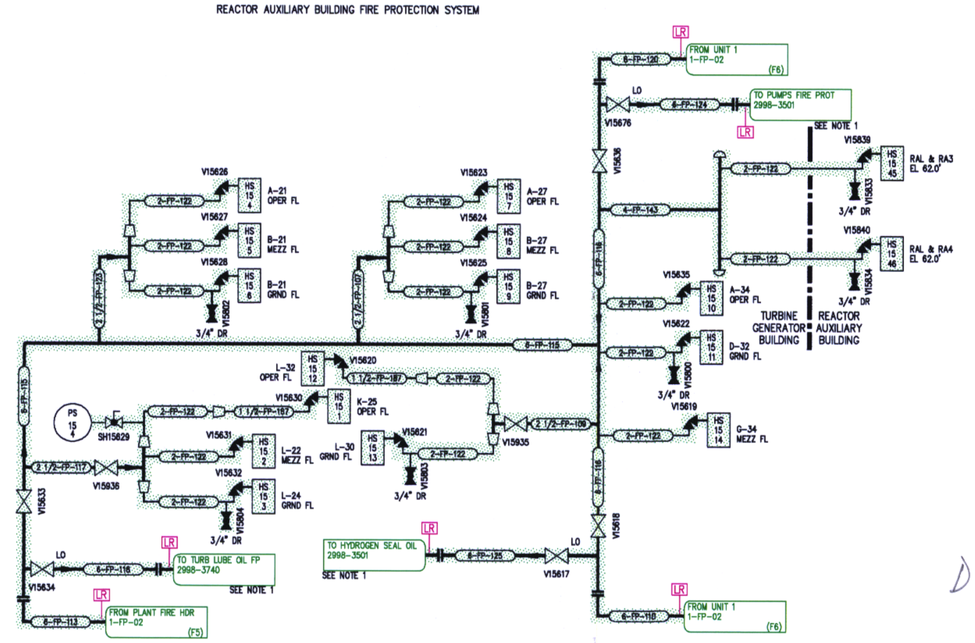

TURBINE BUILDING FIRE PROTECTION SYSTEM

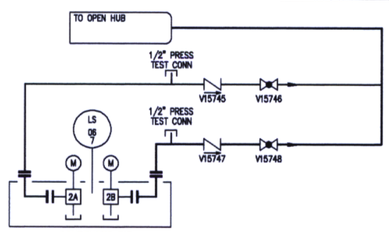

CONDENSER PIT SUMP PUMPS

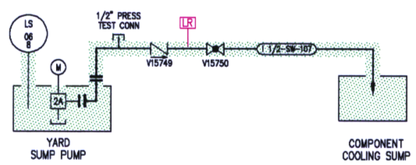

MISCELLANEOUS SUMP PUMPS

D-043

NOTES:

1. LICENSE RENEWAL BOUNDARY CONTINUES ONTO VENDOR DRAWING AND INCLUDES ASSOCIATED FIRE PROTECTION PRESSURE BOUNDARY COMPONENTS.
2. FOR GENERAL NOTES & LEGEND SEE DRAWING NO. 2-NOTES-01.

FLORIDA POWER & LIGHT
ST. LUCIE NUCLEAR UNIT 2

FIRE PROTECTION

LICENSE RENEWAL BOUNDARY DRAWING

DRAWING NUMBER	REVISION
2-FP-01	0

FPL

2FP01.DWG