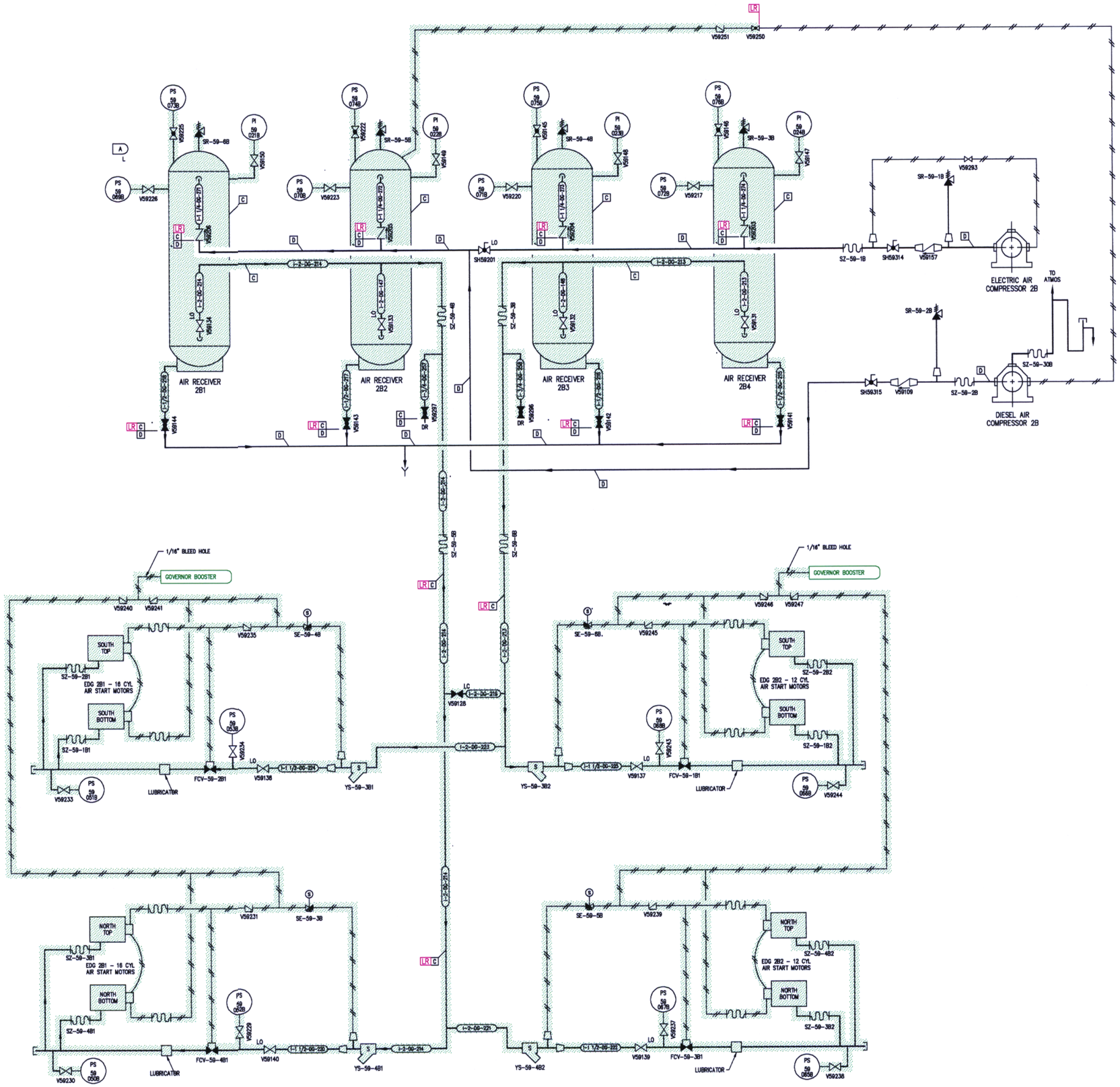

D-037

NOTES:

1. FOR GENERAL NOTES & LEGEND SEE DRAWING NO. 2-NOTES-01.

FLORIDA POWER & LIGHT
ST. LUCIE NUCLEAR UNIT 2

EMERGENCY DEISEL GENERATOR

LICENSE RENEWAL BOUNDARY DRAWING

DRAWING NUMBER	REVISION
2-EDG-07	0

FPL

2EDG07.DWG