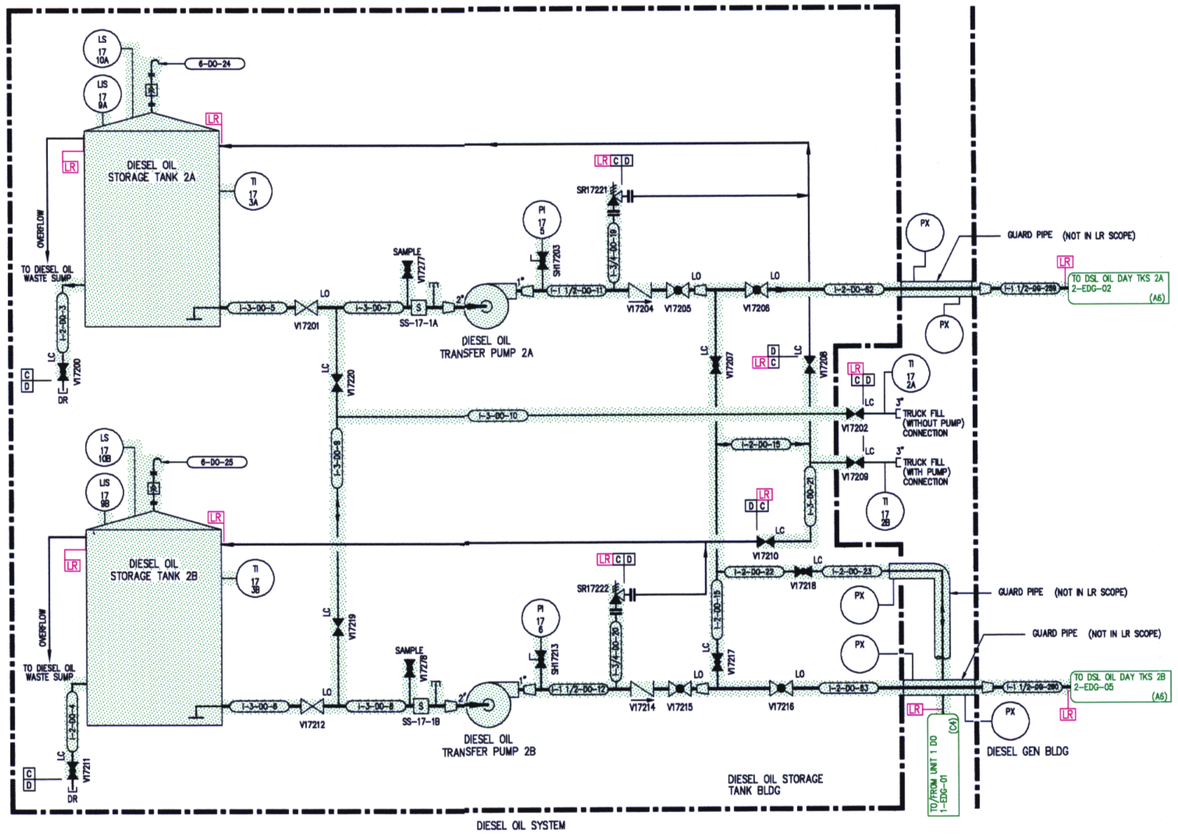

DIESEL OIL SYSTEM

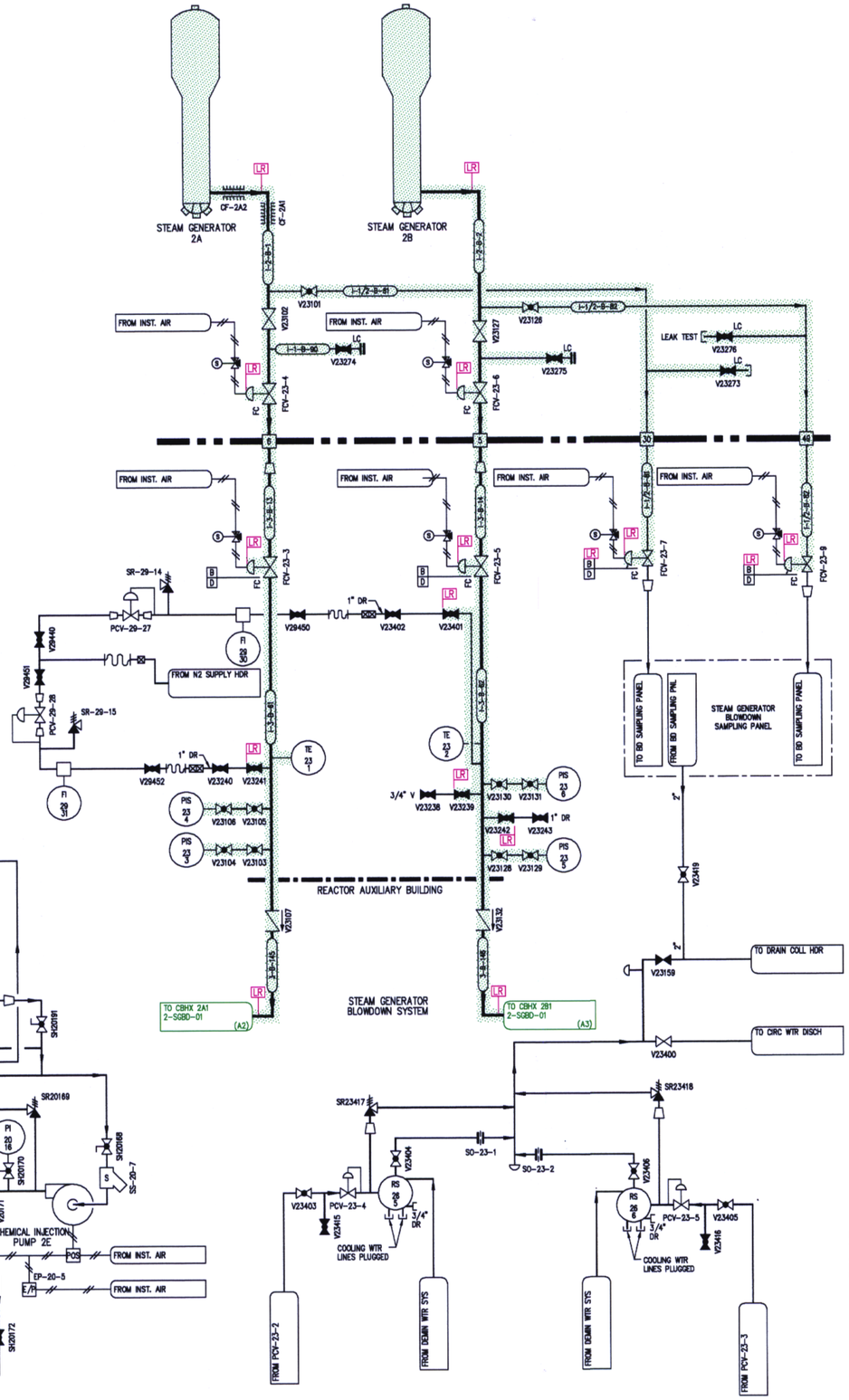

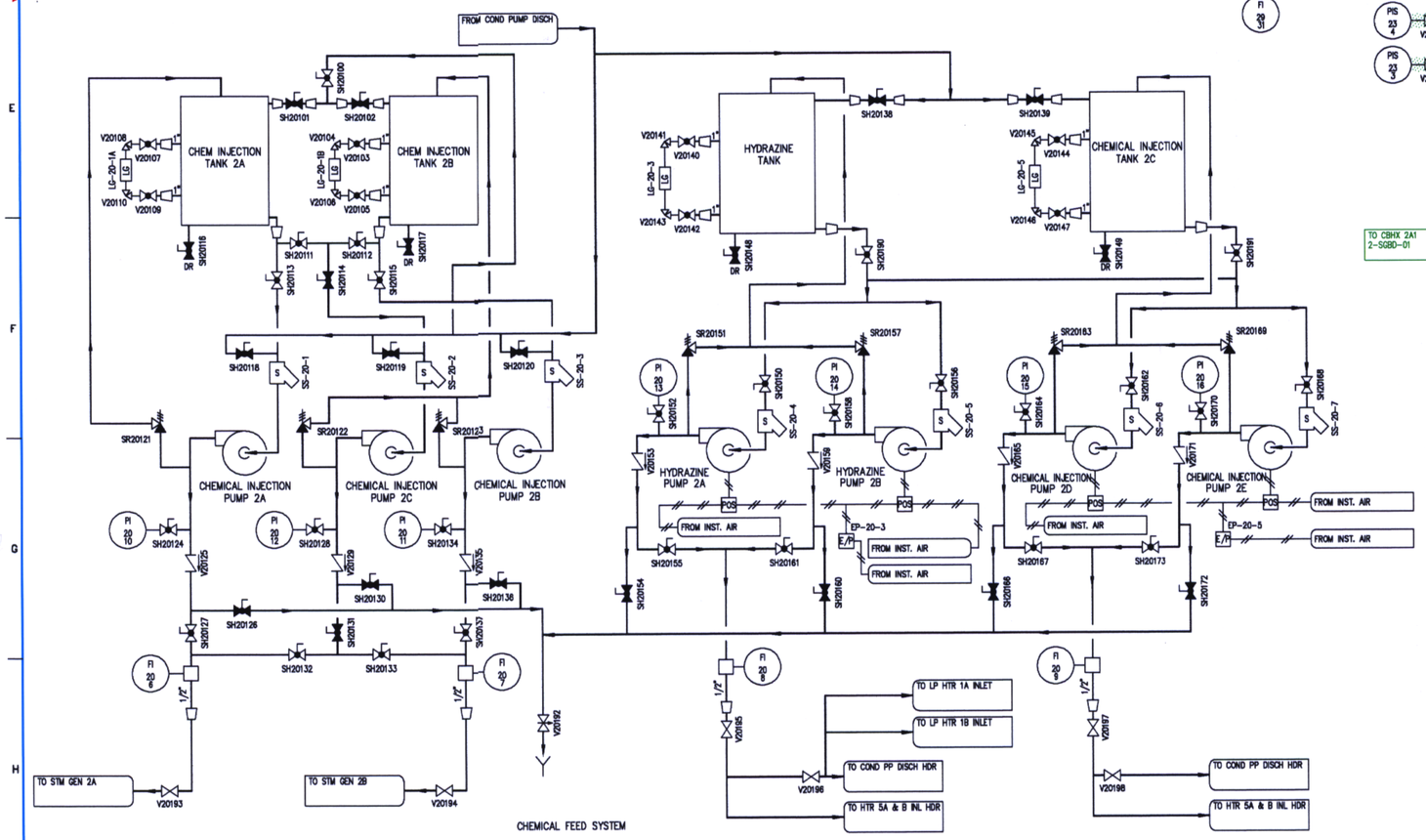

CHEMICAL FEED SYSTEM

D-031

NOTE
THIS DRAWING INCLUDES:
A. CHEMICAL FEED SYSTEM
B. DIESEL OIL SYSTEM
C. STEAM GENERATOR BLOWDOWN SYSTEM

NOTES:

1. FOR GENERAL NOTES & LEGEND SEE DRAWING NO. 2-NOTES-01.

FLORIDA POWER & LIGHT
ST. LUCIE NUCLEAR UNIT 2

EMERGENCY DIESEL GENERATOR

LICENSE RENEWAL BOUNDARY DRAWING

DRAWING NUMBER	REVISION
2-EDG-01	0

FPL

2EDG01.DWG