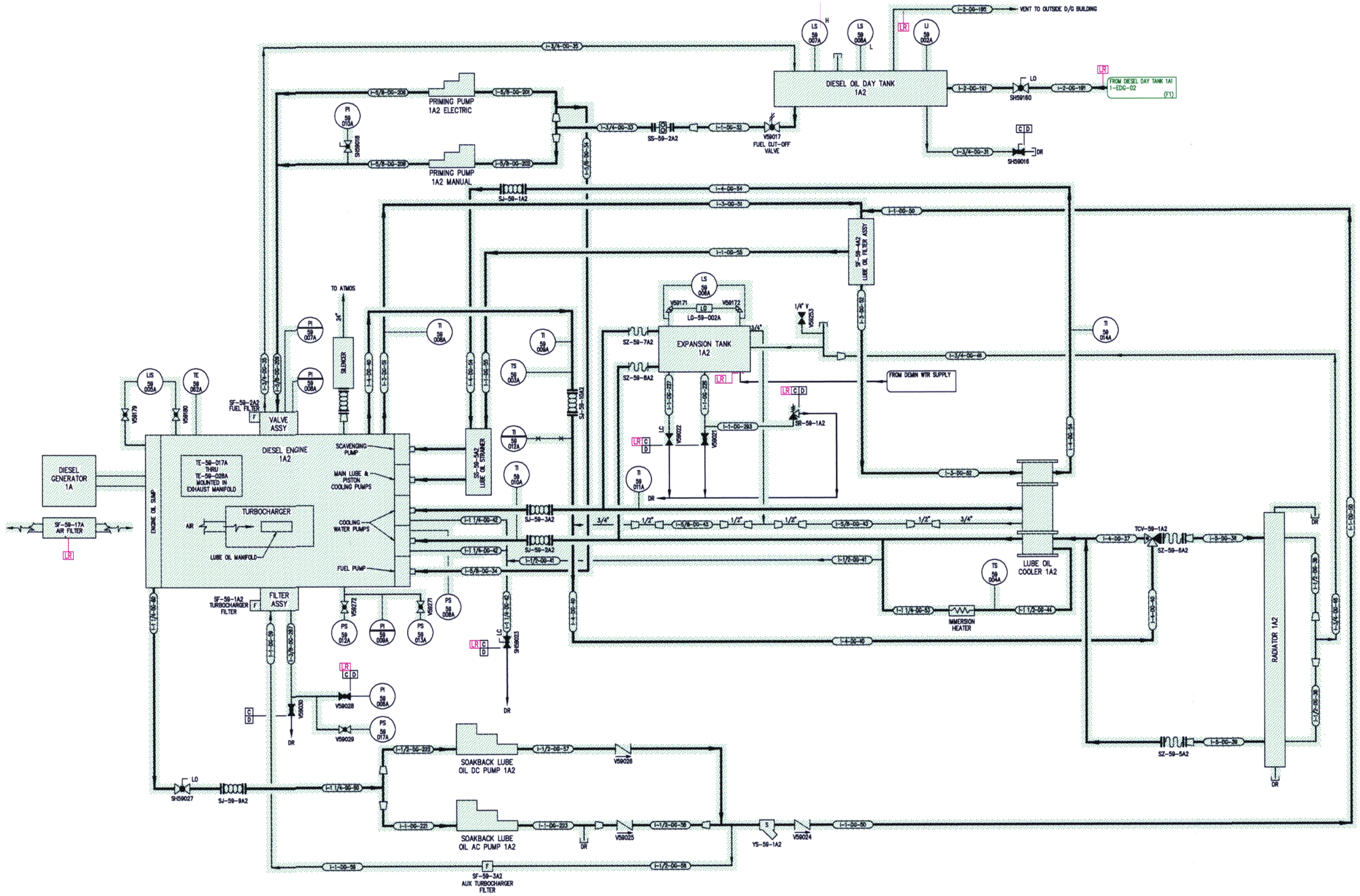

D-026

DIESEL ENGINE 1A2 (12-CYL)

NOTES:

1. ALL SAFETY-RELATED PIPING AND ASSOCIATED COMPONENTS DEPICTED ON THIS DRAWING ARE WITHIN THE SCOPE OF LICENSE RENEWAL UNLESS NOTED OTHERWISE.
2. FOR GENERAL NOTES & LEGEND SEE DRAWING NO. 1-NOTES-01.

FLORIDA POWER & LIGHT
ST. LUCIE NUCLEAR UNIT 1

EMERGENCY DIESEL GENERATOR

LICENSE RENEWAL BOUNDARY DRAWING

DRAWING NUMBER	REVISION
1-EDG-03	0

FPL

1EDG03.DWG